PNL--8332

DE93 004483

STATUS REPORT ON THE DEVELOPMENT OF A THREE-DIMENSIONAL CONCEPTUAL MODEL FOR THE HANFORD SITE UNCONFINED AQUIFER SYSTEM

P. D. Thorne
M. A. Chamness

November 1992

Prepared for
the U.S. Department of Energy
under Contract DE-AC06-76RLO 1830

Pacific Northwest Laboratory
Richland, Washington 99352

MASTER

SUMMARY

This report presents the status of development of a three-dimensional conceptual model for the unconfined aquifer system at Hanford. A conceptual model is needed to support development of a realistic three-dimensional numerical model for predicting ground-water flow and the transport of contaminants. The conceptual model is currently being developed for a study area extending from the 200-East Area to the Columbia River and southward from Gable Mountain to the Supply System. The report focuses on developing a hydrogeologic framework, assessing available hydraulic property data, describing flow-system boundaries, and evaluating areal recharge and leakage. Detailed hydraulic-head and hydrochemistry data have not been presented.

Geologic descriptions of samples obtained during well drilling were used to prepare cross sections that correlate relatively continuous layers. The layers were defined based on textural differences that are expected to reflect differences in hydraulic properties. Assigning hydraulic properties to the layers is a critical part of the conceptual model. Available hydraulic property data for the study area were compiled and were correlated with the geologic layers where possible. Flow-system boundaries are present within the study area at basalt outcrops and at the Columbia River. Boundary conditions have been evaluated for these areas. Available estimates of areal recharge from precipitation were compiled. No quantitative information on leakage between the confined and unconfined systems within the study area was found. However, head relationships indicate a potential for upward leakage over most of the site and downward leakage in the vicinity of ground-water mounds created by waste-water disposal facilities. Additional work is needed to refine and expand the conceptual model.

CONTENTS

SUMMARY iii

INTRODUCTION 1

GEOLOGIC SETTING 5

HYDROLOGIC SETTING 11

CONFINED AQUIFER SYSTEM 11

UNCONFINED AQUIFER 12

DATA SOURCES 17

CONCEPTUAL MODEL FOR THE STUDY AREA 19

BASIS FOR THE CONCEPTUAL MODEL 19

BOUNDARY CONDITIONS 20

DEFINITION OF HYDROGEOLOGIC LAYERS 20

HYDRAULIC PROPERTY DISTRIBUTIONS 32

AREAL RECHARGE 37

VERTICAL LEAKAGE 37

REFERENCES 41

FIGURES

1 Location of the Hanford Site 2

2 Structural Features of the Pasco Basin 6

3 Stratigraphic Column for the Hanford Site Showing Nomenclature of Various Authors 7

4 Distribution of Ringold Formation Section Types Within the Pasco Basin 8

5 Water-Table Elevations for the Hanford Site Unconfined Aquifer in 1944 13

6 Water-Table Elevations for the Hanford Site Unconfined Aquifer in 1990 14

7 Location of Cross Sections Constructed for the Study Area 22

8 Cross Section A-A′ 23

9 Cross Section B-B′ 25

10 Cross Section C-C′ 27

11 Cross Section D-D′ 29

12 Locations of Hydraulic Property Estimates 35

13 Known Transmissivity Values for the Upper Layer 36

14 Areal Distribution of Recharge for the Hanford Site as Modeled by the U.S. Geological Survey 38

15 Comparison of Observed Hydraulic Heads in the Upper Confined Aquifer System and the Unconfined Aquifer System 39

TABLE

1 Transmissivity and Hydraulic Conductivity Estimates for Wells in and Near the Study Area 34

INTRODUCTION

The Hanford Site Ground-Water Surveillance Project, operated by Pacific Northwest Laboratory (PNL),[a] is responsible for monitoring the movement of contaminants in aquifers underlying the Hanford Site (Figure 1). One objective of the Ground-Water Surveillance Project is to develop a three-dimensional conceptual model of ground-water flow for the Hanford Site unconfined aquifer system. The conceptual model will form the basis for subsequent three-dimensional numerical modeling, which is recognized as a promising methodology for predicting the fate of contaminants and the effects of activities that may influence the ground-water flow system on the Hanford Site. Improved characterization and the development of predictive models are important in improving the monitoring of contaminants in the ground water.

The need for improved characterization of the unconfined aquifer, and for vertical characterization in particular, was identified by the U.S. Geological Survey (1987) in a review of work conducted on subsurface transport at Hanford, and by a U.S. Department of Energy (DOE) Tiger Team finding (GW-CF-2) in 1990.

Development of the three-dimensional conceptual model involves the following tasks:

- defining perimeter boundaries and boundary conditions
- defining vertical layers
- determining the system heterogeneity and its significance
- establishing hydraulic property distributions for each layer
- determining areal recharge and vertical leakage.

This report focuses on defining the hydrogeologic structure of the unconfined aquifer in the area extending eastward from the 200-East Area to the Columbia River, and southward from the Gable Mountain anticline approximately to the Supply System. Most of the contaminants discharged to

---

(a) PNL is operated for the U.S. Department of Energy by Battelle Memorial Institute under Contract DE-AC06-76RLO 1830.

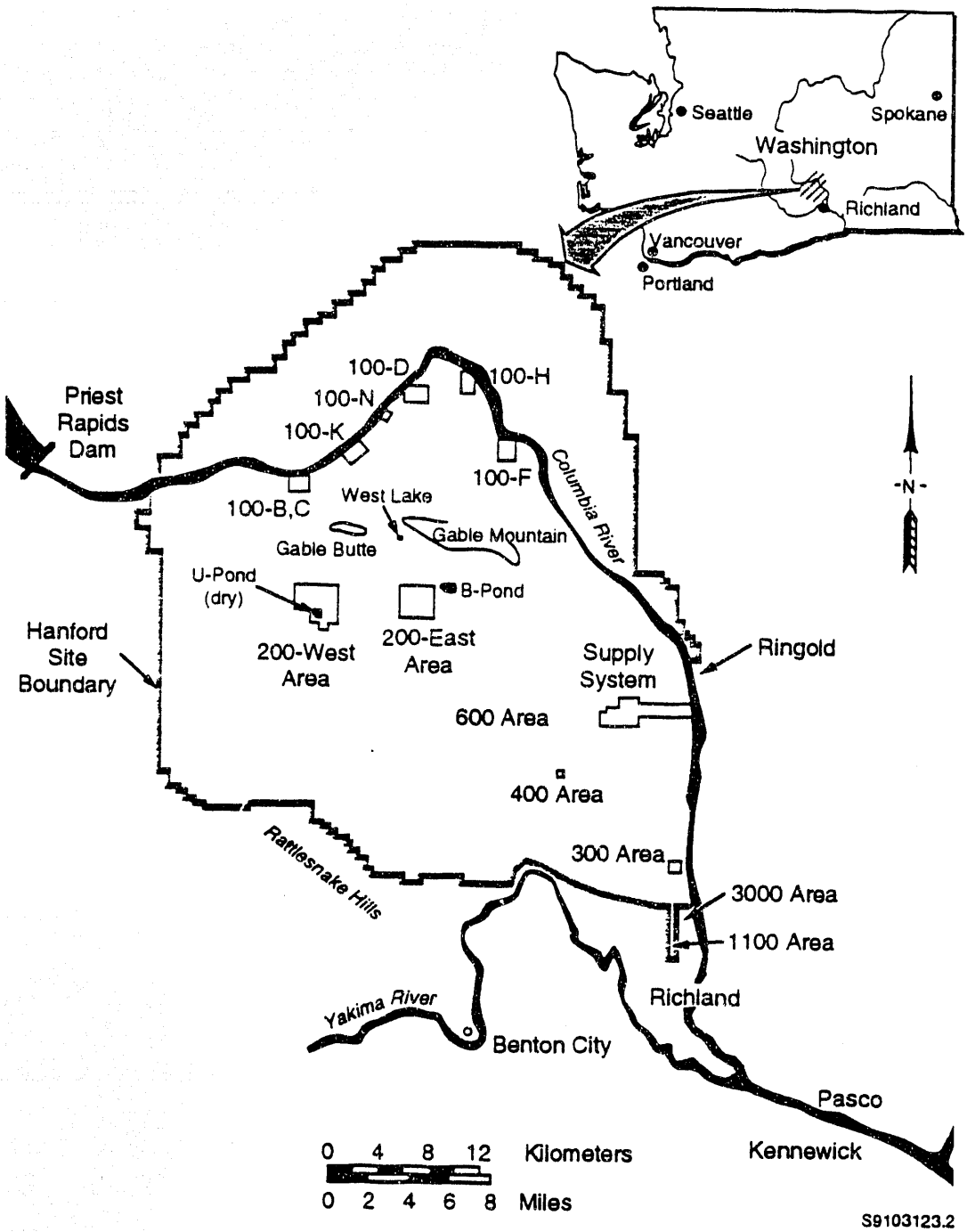

FIGURE 1. Location of the Hanford Site

waste-water disposal facilities in the 200-East Area travel through the unconfined aquifer in this area. This is also a region of relatively high transmissivity, which results in short travel times to the Hanford Site perimeter when compared with movement of contaminants in the vicinity of the 200-West Area, or northward from the 200-East Area.

Information on the regional geology and hydrology of the Hanford Site is provided in the next two sections. The sources of data used in developing the conceptual model are then described. The final section presents the preliminary conceptual model for the study area. Boundary conditions are described for flow-system boundaries within the study area. Conceptual model layers are defined based on relatively continuous textural facies and are presented in cross sections of the study area. Available information on hydraulic properties for various facies types is tabulated. Although hydrochemistry and hydraulic-head information is important in understanding the ground-water flow system, these types of data are not presented in this report. Hydraulic-head and hydrochemistry data for the uppermost layer of the aquifer are widely available. However, there is little information on the vertical distribution of contaminants or on vertical hydraulic-head variations within the unconfined aquifer.

GEOLOGIC SETTING

Hanford Site geology has been studied extensively over the years. The information provided here is a summary aimed at developing a three-dimensional hydrogeologic conceptual model of the Hanford Site. More detailed descriptions of the accumulated knowledge of Hanford Site geology are provided in Myers and Price (1979), DOE (1988), and Lindsey et al. (1992).

The Hanford Site lies within the Pasco Basin (Figure 2). A generalized stratigraphic column showing the nomenclature of various authors is provided in Figure 3. The lowest geologic unit of interest for this report is the Columbia River Basalt Group, which consists of an assemblage of continental flood basalts covering an area of more than 160,000 km^2. These flood basalts were erupted from approximately 6 million to 17 million years ago. Within the Pasco Basin, the Elephant Mountain flows of the Saddle Mountains Basalt Formation are generally the uppermost basalt flows. Sandwiched between many of the flows of the Saddle Mountains Basalt are sedimentary interbeds collectively called the Ellensburg Formation. The Ellensburg Formation includes fluvial and lacustrine sediments consisting of muds, sands, and gravels.

Following the cessation of the flood basalt eruptions came a period of sedimentary aggradation within the center of the Pasco Basin. This is evidenced by the thick sedimentary sequence of the Ringold Formation. The Ringold Formation was deposited from about 3.9 million to 10.5 million years ago (DOE 1988). There are three different facies types within the Ringold, depending on the proximity to the ancient river systems and basaltic ridges of the time (Figure 4). The first facies, Type I, consists of gravel and associated sand and silt representing a migrating channel deposit of the ancestral Columbia and/or Salmon-Clearwater river systems. Type I sediments are generally confined to the central portion of the Pasco Basin. The Type II facies comprises mainly overbank sand, silt, and clay deposited around the margins of the basin, away from the main fluvial channel system. Type III is a fanglomerate facies comprising angular basaltic debris derived from side-stream alluvium shed onto the flanks of basalt ridges. This facies occurs only locally around the extreme margins of the basin. Types I and II are the

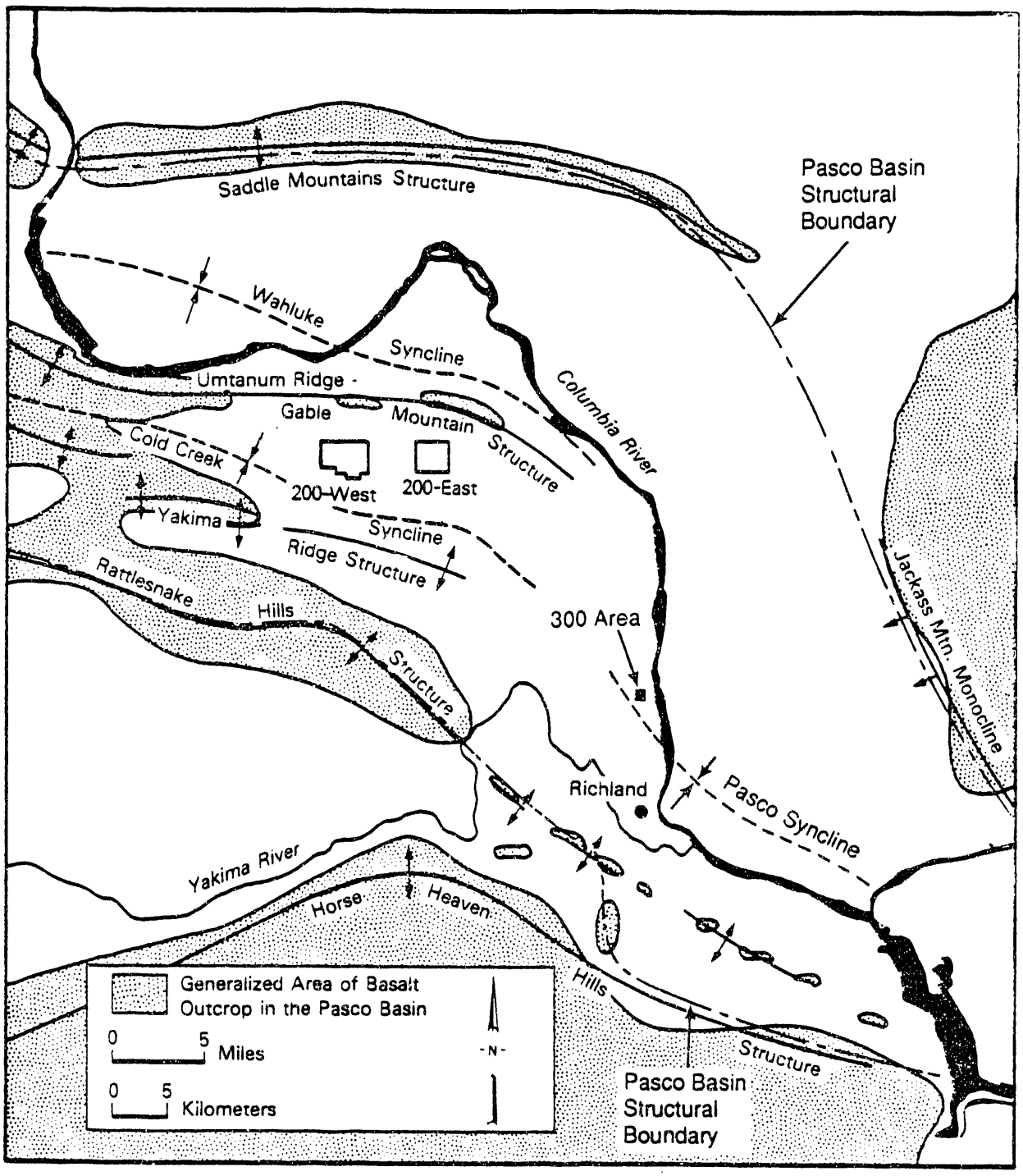

FIGURE 2. Structural Features of the Pasco Basin

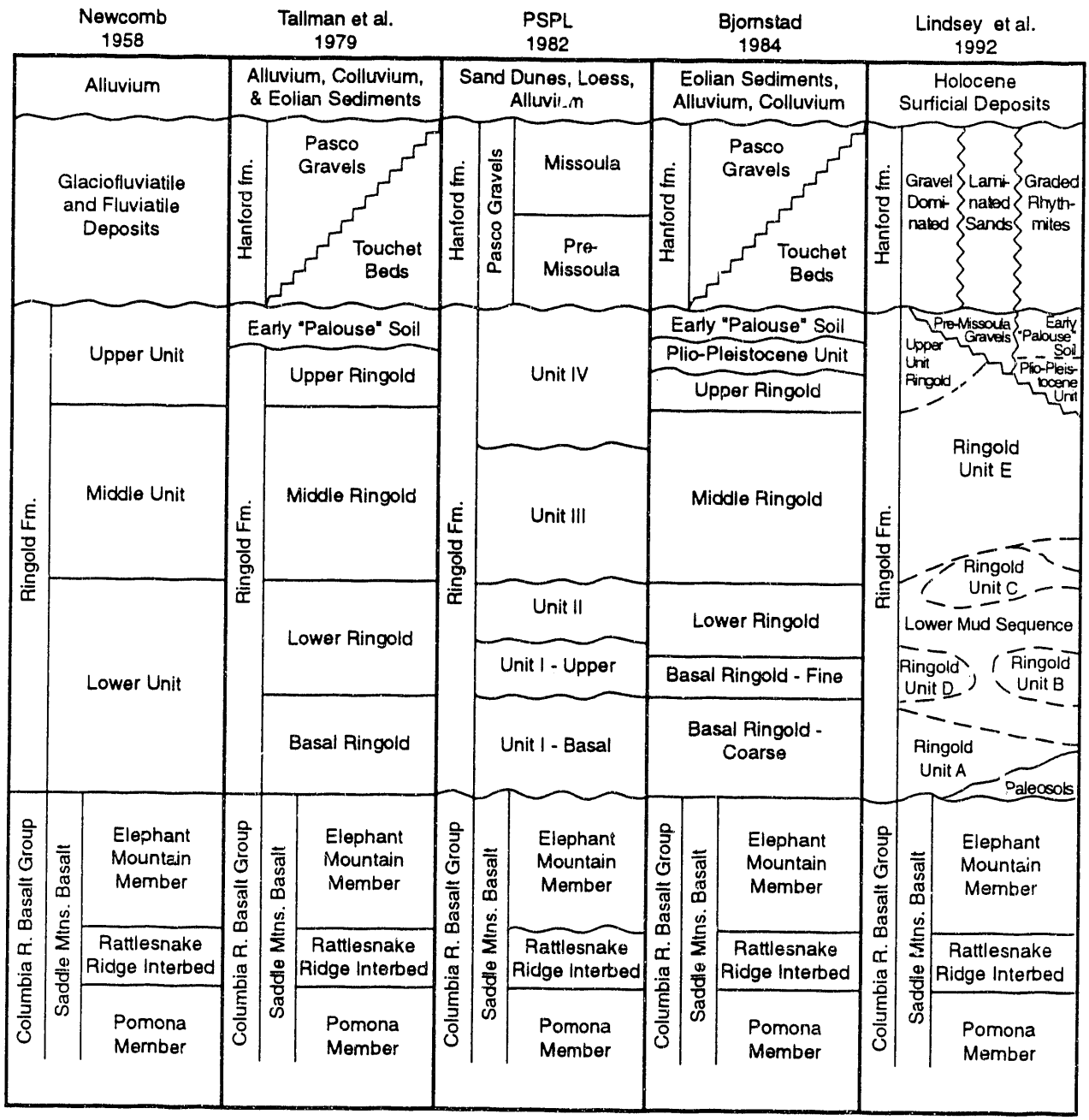

FIGURE 3. Stratigraphic Column for the Hanford Site Showing Nomenclature of Various Authors

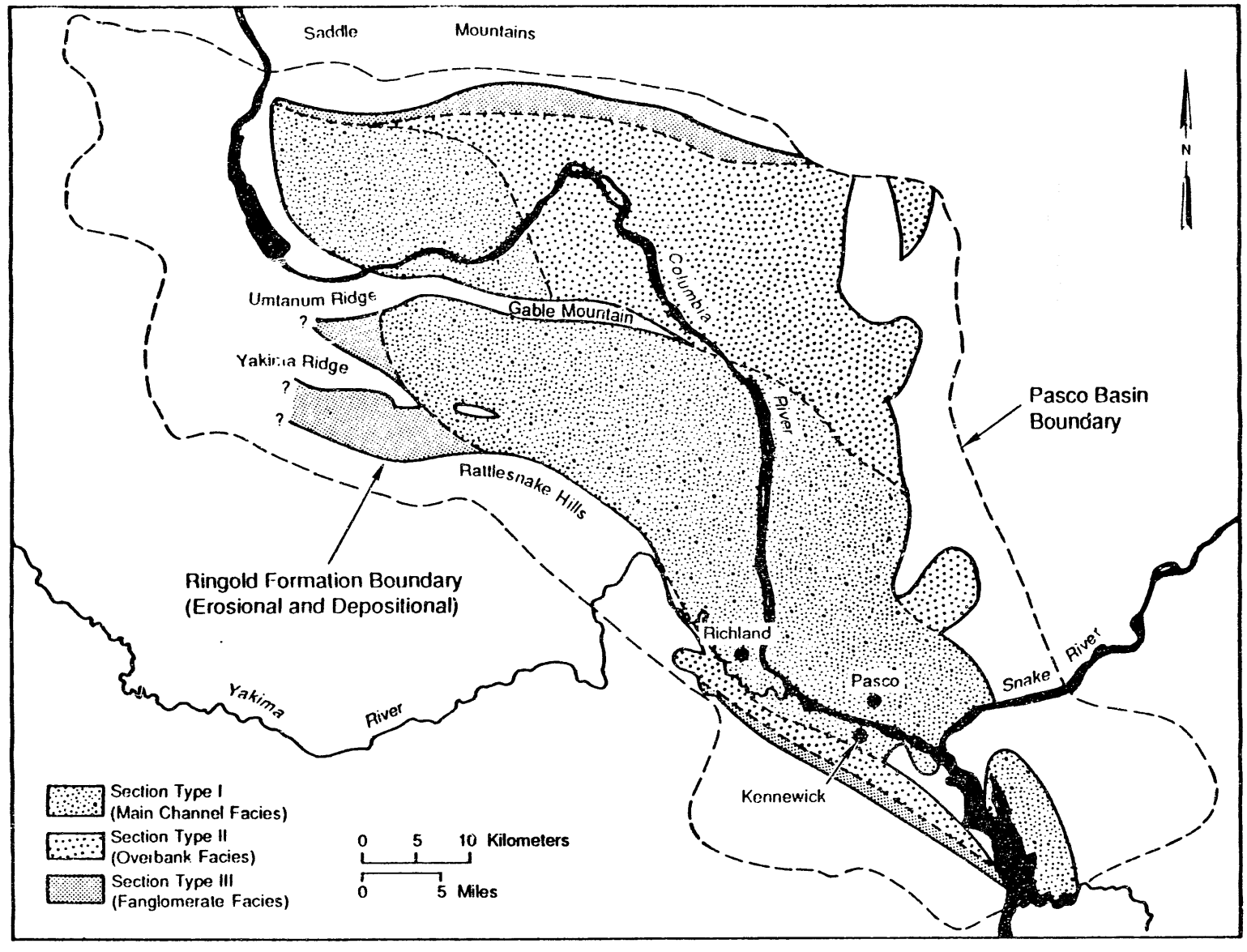

FIGURE 4. Distribution of Ringold Formation Section Types Within the Pasco Basin

dominant facies types on the Hanford Site. The alternating coarse and fine sediments deposited as the river channel moved are the basis for various stratigraphic nomenclature systems. The various nomenclatures have been based on either lithofacies units (Newcomb 1958; Tallman et al. 1979; Bjornstad 1984) or upward-fining fluvial cycles (PSPL[a] 1982). More recently, Lindsey (1991) has presented a revised division of the Ringold Formation based on lithofacies associations. These subdivisions are illustrated in Figure 3.

After Ringold deposition, during the late Pliocene to early Pleistocene, there was a period of regional incision followed by soil development and deposition of wind-blown sediments (Bjornstad 1985). These deposits are called the Plio-Pleotocene unit and the early "Palouse" soil, respectively. In the eastern portion of the basin, including the current study area, the Plio-Pleistocene unit and the early "Palouse" soil are not found and, therefore, either were not deposited or were eroded later by the Columbia River or cataclysmic flooding.

The last 2 million years saw a resumption of fluvial deposition punctuated by periods of erosion and deposition by cataclysmic floods (i.e., Missoula floods). Puget Sound Power and Light reported a sand and gravel unit overlying the Ringold Formation that was deposited by the ancestral Columbia River prior to Missoula flooding (PSPL 1982). These deposits, called the Pre-Missoula by PSPL, are similar in texture to the overlying Hanford formation and were not distinguished from the Hanford formation sediments except in PSPL (1982). The Hanford formation was deposited during the last ice age by cataclysmic floods. These floods inundated the Pasco Basin a number of times during the Pleistocene, often eroding existing sediments (Bjornstad and Fecht 1989). As flood waters were dammed up behind Wallula Gap, deposition of both coarse- and fine-grained sediments entrained in the flood waters occurred within the basin. As the flood waters gradually drained, both deposition and erosion occurred. This sequence of events created a complex stratigraphy within the Hanford formation, with lenses of sand and silt surrounded by sand and gravel. For the most part, however, fine-grained sediments are found near the margins of the basin and coarse-grained sediments are found in the central

---

(a) Puget Sound Power and Light.

part where the flood currents were stronger. Capping the Hanford formation in many areas is a thin veneer of eolian sands and/or recent fluvial deposits.

As deposition of the basalt flows and sediments was occurring, structural forces were causing the downwarping of the Pasco Basin and the uplift and folding of the surrounding basalt ridges. These structural features generally controlled the locations of the ancestral and present-day rivers and their associated sedimentary deposits.

HYDROLOGIC SETTING

Both unconfined and confined aquifer systems lie beneath most of the Hanford Site. The unconfined aquifer system is located in unconsolidated to semiconsolidated sediments overlying the basalt bedrock. Parts of this aquifer are locally confined or semiconfined. However, because the entire suprabasalt aquifer system is interconnected on a sitewide scale, it has commonly been referred to as the Hanford "unconfined" aquifer. This nomenclature is used in this report. Aquifers located within the Columbia River Basalts are referred to as the confined aquifer system.

CONFINED AQUIFER SYSTEM

Confined aquifers within the Columbia River Basalts are composed of relatively permeable sedimentary interbeds and the brecciated tops of basalt flows. The horizontal hydraulic conductivities of most of these aquifers fall in the range of 10^{-10} to 10^{-4} m/s. Dense interior sections of the basalt flows have horizontal hydraulic conductivities ranging from 10^{-15} to 10^{-9} m/s, about five orders of magnitude lower than those of the confined aquifers (DOE 1988). Ground water in the confined aquifers underlying the Hanford Site comes mainly from infiltration of precipitation and streamflow within recharge areas along the periphery of the Pasco Basin (DOE 1988). Hydraulic-head information indicates that ground water in the confined aquifers flows generally toward the Columbia River and, in some places, toward areas of enhanced vertical flow communication with the unconfined system (Bauer et al. 1985; Spane 1987; DOE 1988).

With regard to development of a conceptual model for the unconfined aquifer, the confined aquifer system is important because the two systems are known to be in hydraulic communication in the area northeast of the 200-East Area (Graham et al. 1984), and because there is a potential for significant ground-water leakage between the two systems. Interaquifer leakage and its impact on the conceptual model for the unconfined aquifer are discussed further in a later section on leakage.

UNCONFINED AQUIFER

Ground water in the unconfined aquifer at Hanford generally flows from recharge areas in the elevated region near the western boundary of the Hanford Site toward the Columbia River on the eastern and northern boundaries. The Columbia River is the primary discharge area for the unconfined aquifer. The Yakima River borders the Hanford Site on the southwest and is generally regarded as a source of recharge. Natural areal recharge from precipitation across the entire Hanford Site is thought to range from about 0 to 10 cm/yr, but is probably less than 2.5 cm/yr over most of the site (Gee and Heller 1985; Bauer and Vaccaro 1990). Areal recharge is discussed further in a later section. Since 1944, the artificial recharge from Hanford waste-water disposal operations has been greater than the natural recharge. An estimated 1.68×10^{12} liters of liquid was discharged to disposal ponds, trenches, and cribs in this period.

The unconfined aquifer at Hanford lies mainly within the Ringold and Hanford formations. Horizontal hydraulic conductivities of sand and gravel facies within the Ringold Formation generally range from about 10^{-5} to 10^{-4} m/s (10 to 10^{2} ft/d) (DOE 1988). Because the Ringold sediments are more consolidated, contain more silt, and are less well sorted, they are about 10 to 100 times less permeable than the sediments of the overlying Hanford formation. Prior to waste-water disposal operations at the Hanford Site, the uppermost aquifer was mainly within the Ringold Formation and the water table extended into the Hanford formation at only a few locations (Newcomb et al. 1972). However, waste-water discharges have increased the water-table elevation and created ground-water mounds under the two main waste-water disposal areas near the 200-East and 200-West Areas. Because of the increased ground-water elevation, the unconfined aquifer now extends upward into the Hanford formation within the study area. This change has resulted in an increase in transmissivity because the newly saturated Hanford formation sediments are more permeable.

Maps showing water-table elevations for the unconfined aquifer in 1944 and 1990 are provided in Figures 5 and 6, respectively. During the intervening period, the water table has risen about 27 m under a disposal area in the 200-West Area and about 9 m under disposal ponds near the 200-East Area. The

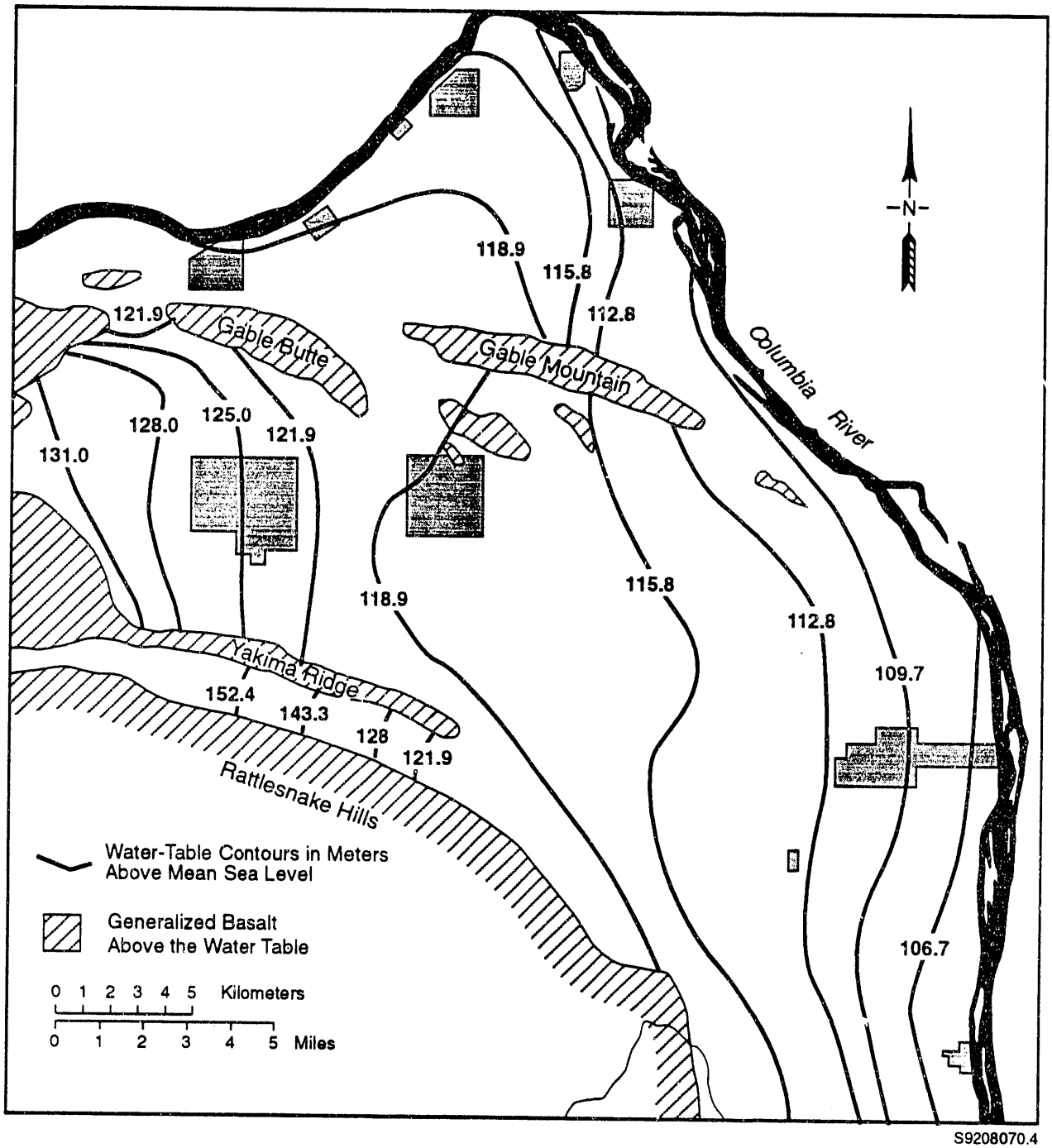

FIGURE 5. Water-Table Elevations for the Hanford Site Unconfined Aquifer in 1944 (after Kipp and Mudd 1974)

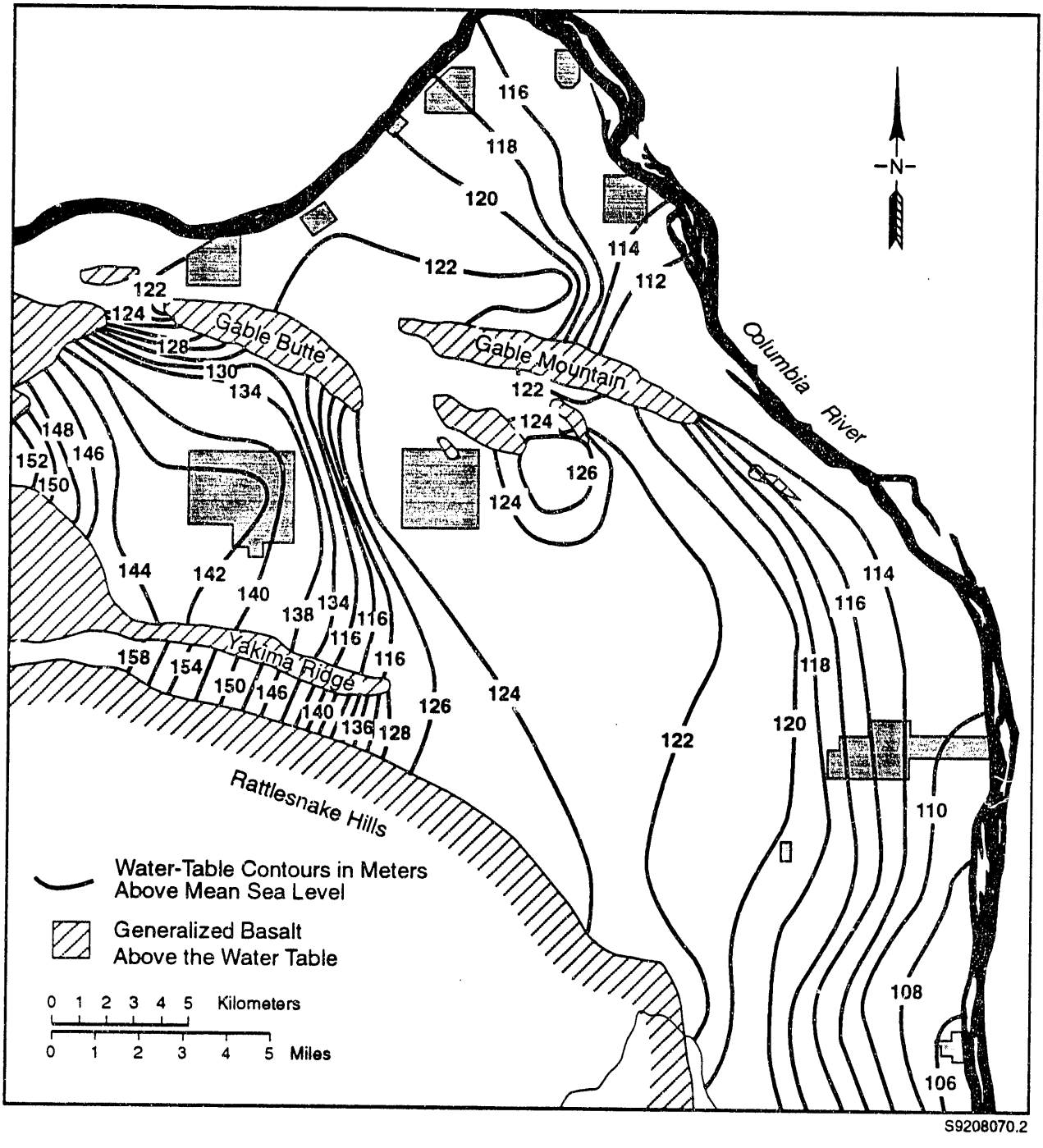

FIGURE 6. Water-Table Elevations for the Hanford Site Unconfined Aquifer in 1990 (after Newcomer et al. 1991)

volume of water that has been discharged to the ground at the 200-West Area is actually less than that discharged at 200-East. However, the lower permeability of the aquifer in the vicinity of 200-West has inhibited ground-water movement in this area and resulted in a higher ground-water mound. The presence of the ground-water mounds has also affected the direction of ground-water movement, causing radial flow from the discharge areas. Zimmerman et al. (1986) documented changes in water-table elevation between 1950 and 1980. They showed that the edge of the mounds migrated outward from the sources over time until about 1980. Water levels have declined in some areas since 1980 because of decreased waste-water discharges (Newcomer 1990).

DATA SOURCES

An inventory of Hanford Site wells completed at depths more than 6 m below the top of the aquifer was compiled as part of the Ground-Water Surveillance Project. This work included documenting the availability of data such as geologic logs, natural gamma logs, grain-size distributions, hydraulic properties, hydrochemical analyses, and water level measurements for each of the wells. Information was compiled from McGhan (1989), the Hanford Site ground-water data base, and data files. These historical data provide a beginning data base for the three-dimensional characterization effort.

Definition of layers for the conceptual model within the study area was based on geologic descriptions of samples acquired during drilling of wells. The number of data points needed to adequately define the geologic structure depends on its complexity and the amount of heterogeneity. The sedimentary architecture of the unconfined aquifer is very complex as a result of the sequences of repeated deposition and erosion that have occurred in this area. Although hundreds of wells have been drilled on the Hanford Site, many penetrate only a small percentage of the total unconfined aquifer thickness. Therefore, the number of wells available for defining the deeper facies is limited. A number of relatively deep wells were drilled in the early 1980s as part of a study for a proposed nuclear power plant (PSPL 1982). The information from these wells was useful in defining facies architecture. However, for many of the thinner and less extensive sedimentary units, correlation between wells is either not possible or uncertain.

A limited amount of hydraulic property data is available from testing of wells. Hydraulic test results from wells on the Hanford Site have been compiled for the Ground-Water Surveillance Project and will be published in a separate report. Transmissivity results for wells in the study area are presented in a later section on hydraulic property distributions. Depths of the tested intervals have been correlated with the top of the unconfined aquifer as defined by the water-table elevations presented in Newcomer et al. (1991). Most of the hydraulic tests have been conducted within the upper 15 m of the aquifer, and many test intervals are open to more than one layer. In some cases, changes in water-table elevation may have significantly changed

the unconfined aquifer transmissivity at a well since the time of the hydraulic test. The accuracy of many of the transmissivity estimates is also uncertain. Only three hydraulic tests within the study area have resulted in estimates of aquifer specific yield.

Estimates of natural areal recharge were obtained from previously documented studies employing lysimeters (Gee and Heller 1985; Gee et al. 1989) and from application of an infiltration model by the U.S. Geological Survey (Bauer and Vaccaro 1990). No data quantifying the leakage between the upper confined and unconfined aquifers are available. Head relationships presented in previous reports (DOE 1988) demonstrate the potential for such leakage. Water chemistry data indicating that interaquifer leakage has taken place in areas of increased vertical communication also have been presented in published reports (Graham et al. 1984; Jensen 1987; Early et al. 1988).

CONCEPTUAL MODEL FOR THE STUDY AREA

The preliminary three-dimensional conceptual model of the study area is presented in this section. Flow-system boundaries within the study area are described, relatively continuous facies with similar hydrogeologic properties are used to define layers, hydraulic property data from wells are presented, and the areal recharge and aquifer leakage questions are addressed.

BASIS FOR THE CONCEPTUAL MODEL

The development of an appropriate conceptual model is the first step in building a numerical model of the unconfined aquifer. The accuracy of past ground-water and transport modeling efforts applied to the Hanford Site has been limited by the following factors:

- assumption of two-dimensional flow through a single vertically homogeneous layer
- insufficient resolution of hydraulic properties to reflect lateral heterogeneity
- inclusion of uncertain values in the hydraulic property distribution
- unknown rate of vertical leakage from the underlying confined aquifer system
- uncertainty in the definition of the boundary condition corresponding to the Yakima River.

These factors must be addressed in development of the three-dimensional conceptual model to improve characterization of the flow system and provide the basis for more accurate numerical simulations.

This conceptual model is considered preliminary, and additional information is needed to support development of a realistic three-dimensional numerical model. Current planning calls for additional information to be collected and used to improve the conceptual model. The conceptual model will also be expanded southward to the southern boundary of the Hanford Site and, eventually, westward to the Rattlesnake Hills and northward to the Columbia River.

BOUNDARY CONDITIONS

The Columbia River generally is recognized as a boundary for the unconfined flow system. Average hydraulic heads are higher on both sides of the river and the river acts as a discharge line for the aquifer. This is easily conceptualized when the system is considered to be two-dimensional. However, the river does not completely penetrate the aquifer and a more sophisticated three-dimensional view is needed. Luttrell et al. (1992), in their cross-sectional model for the Hanford Townsite, considered the river to be a held-head boundary from the river surface to its bottom. They considered the boundary from the bottom of the river to the top of basalt to be a no-flux boundary. This is considered the best approach for defining the boundary at the Columbia River. Another complicating factor is the changing river stage. These changes take place on both daily and seasonal cycles as a result of releases from upstream dams. The changes in river stage result in flow from the river into the aquifer (bank storage) during high river stage. However, the overall average direction of ground-water flow is toward the river. Because bank storage effects are observed only relatively close to the river, they are not expected to have a large impact on the regional flow system. Time-averaged river stage elevation is, therefore, considered an appropriate value for the held-head along the river.

A flow-system boundary also forms part of the northern edge of the current study area, where the basalt forming Gable Mountain rises above the water table. This may be considered a no-flux boundary and can be defined by geologic data from wells. The unconfined aquifer continues to the north between Gable Mountain and the Columbia River.

DEFINITION OF HYDROGEOLOGIC LAYERS

To identify hydrogeologic layers that are relatively extensive across the study area, geologist's and driller's logs for a number of wells were reviewed, as were other reports containing geologic interpretations of the sediments underlying the Hanford Site (Gaylord and Poeter 1988; Lindsey 1991; Lindsey et al. 1992). The lithofacies units defined in this report are based on texture and are, therefore, similar to those discussed in Lindsey (1991) and Lindsey et al. (1992). These textural differences are expected to reflect

hydraulic property differences. However, the data available in the geologic logs are not detailed enough to distinguish layers based on characteristics discussed in Lindsey et al. (1992) and Lindsey (1991). There has therefore been no effort to directly correlate the units identified in this report with those of Lindsey et al. (1992).

Four cross sections (see Figure 7 for locations) have been drawn to show a simplified stratigraphy areally (Figures 8, 9, 10, and 11). Heavier lines indicate the contact between the basalt, Ringold, and Hanford formations. The water table shown in the cross sections is based on a map in Newcomer et al. (1991). Because the purpose of this report is to formulate a conceptual hydrogeologic model of the whole Hanford Site, the stratigraphy identified here is somewhat simplified. Textural differences were used to develop this stratigraphy because texture is a dominant control of hydraulic properties for sediments. Sediments were grouped into three textures: those with particles silt size or smaller (collectively called mud), sand, and those with gravel and varying amounts of sand and mud. Dividing the sediments in this way, however, means that many of the smaller-scale heterogeneities are not represented. This is particularly true of the Hanford formation, where changes in texture occur over short distances and are often discontinuous.

In the area studied, the basalt forms a relatively gently dipping surface from 46 to 230 m beneath the surface. The exception is the Southeast Anticline, a subsurface structural extension of the Gable Mountain–Gable Butte trend (see Figures 8, 9, and 10). Cross section D-D′ (see Figure 11) lies to the southwest of the anticline and does not intersect it.

The Ringold sediments overlying the basalt generally form a pattern of alternating fine-grained and coarse-grained layers that is interrupted by the Southeast Anticline. The anticline was continuing to grow during the time of Ringold deposition (Reidel et al. 1980), causing sediments either to not be deposited or to be eroded across the anticline. Ringold sediments range in thickness from 0 m over the Southeast Anticline to almost 200 m at the southern end of cross section D-D′ (Figure 11). It is known that in many areas the lower portions of the Ringold Formation have been folded along with the basalt. Data from the study area, however, are insufficient to determine which layers may have been folded along the flanks of the Southeast Anticline

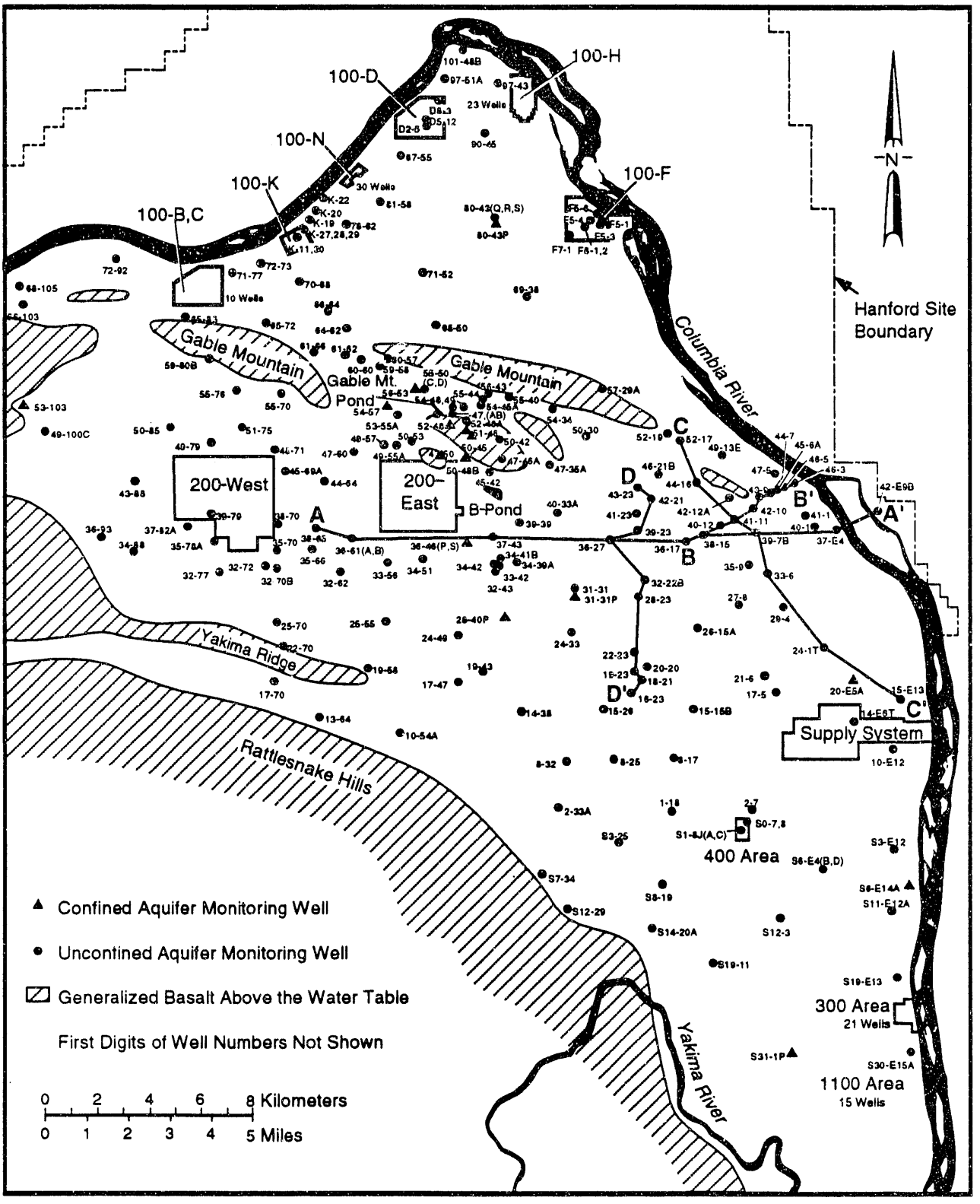

FIGURE 7. Location of Cross Sections Constructed for the Study Area

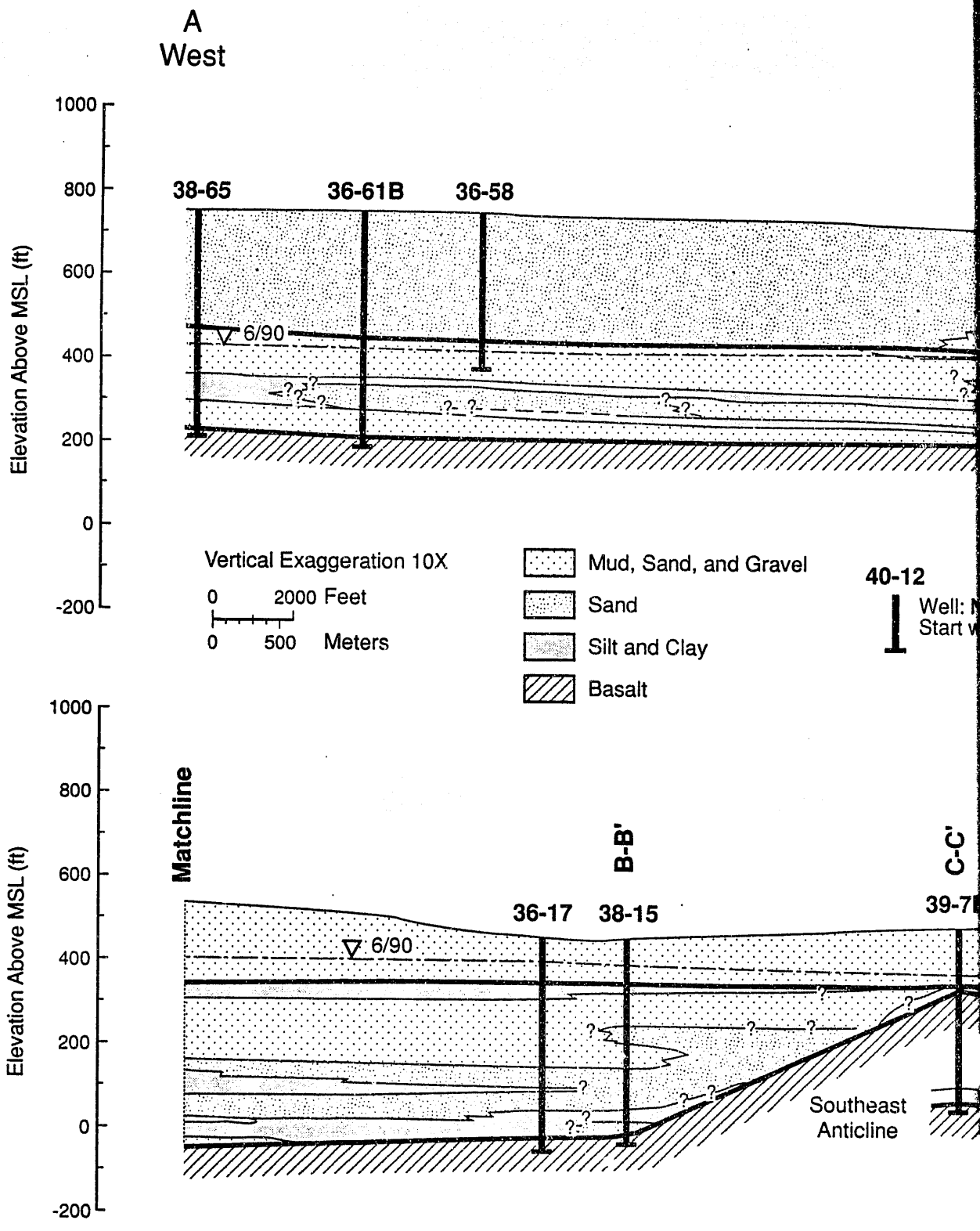

FIGURE 8. Cross Section A

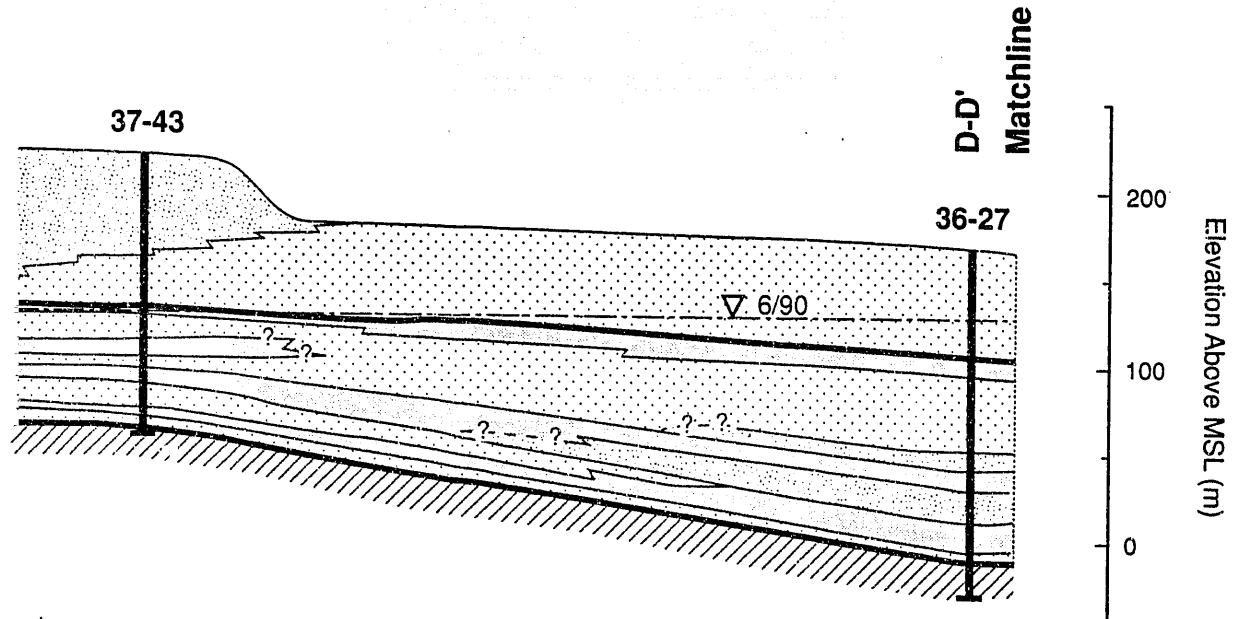

ımbers
h 699-

Water levels measured
from Newcomer et al. 1991

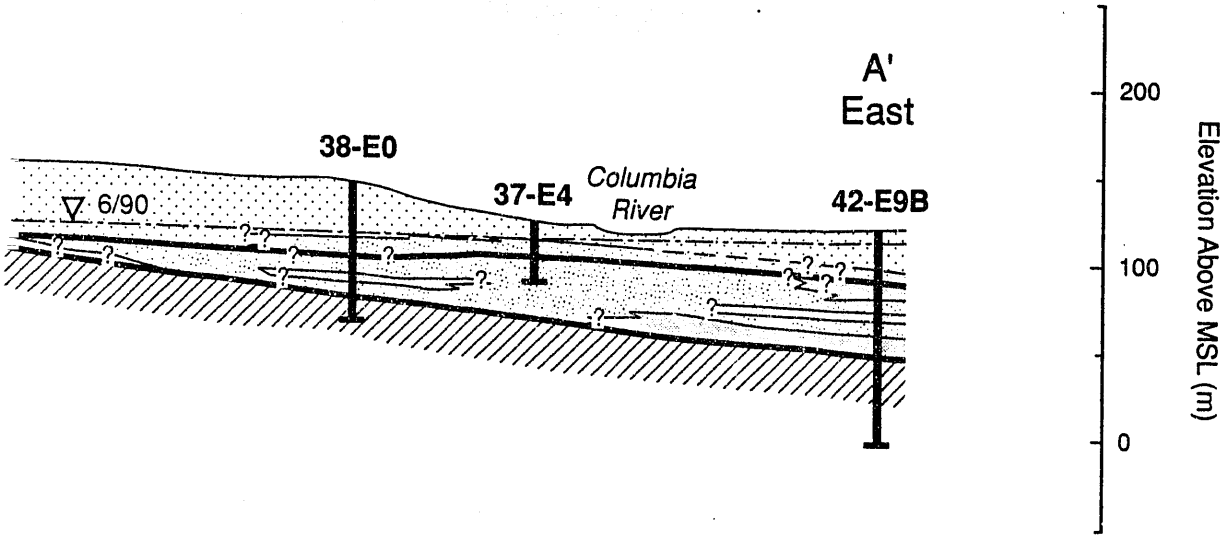

S9207035.2

A' (MSL = mean sea level)

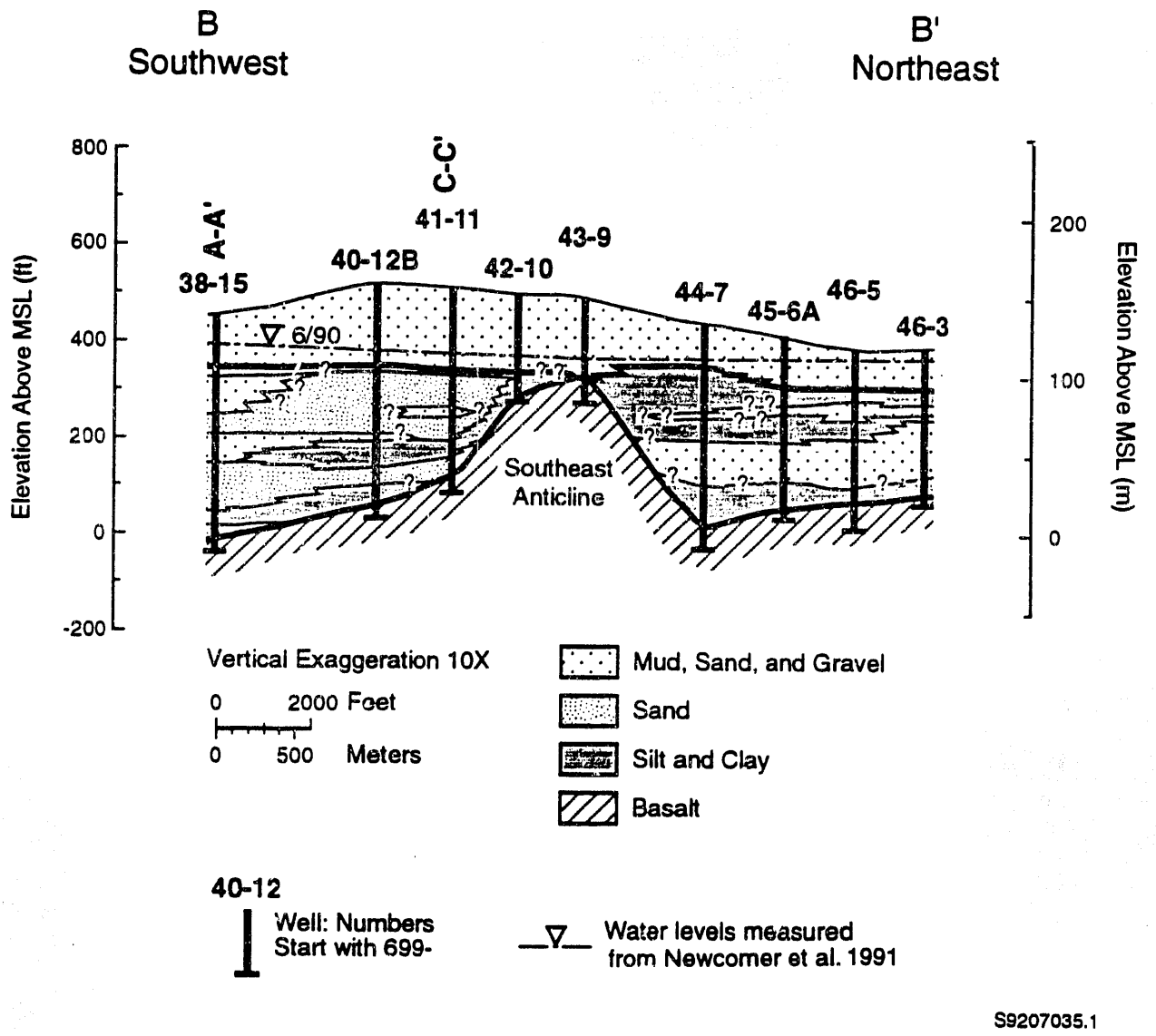

FIGURE 9. Cross Section B-B′ (MSL = mean sea level)

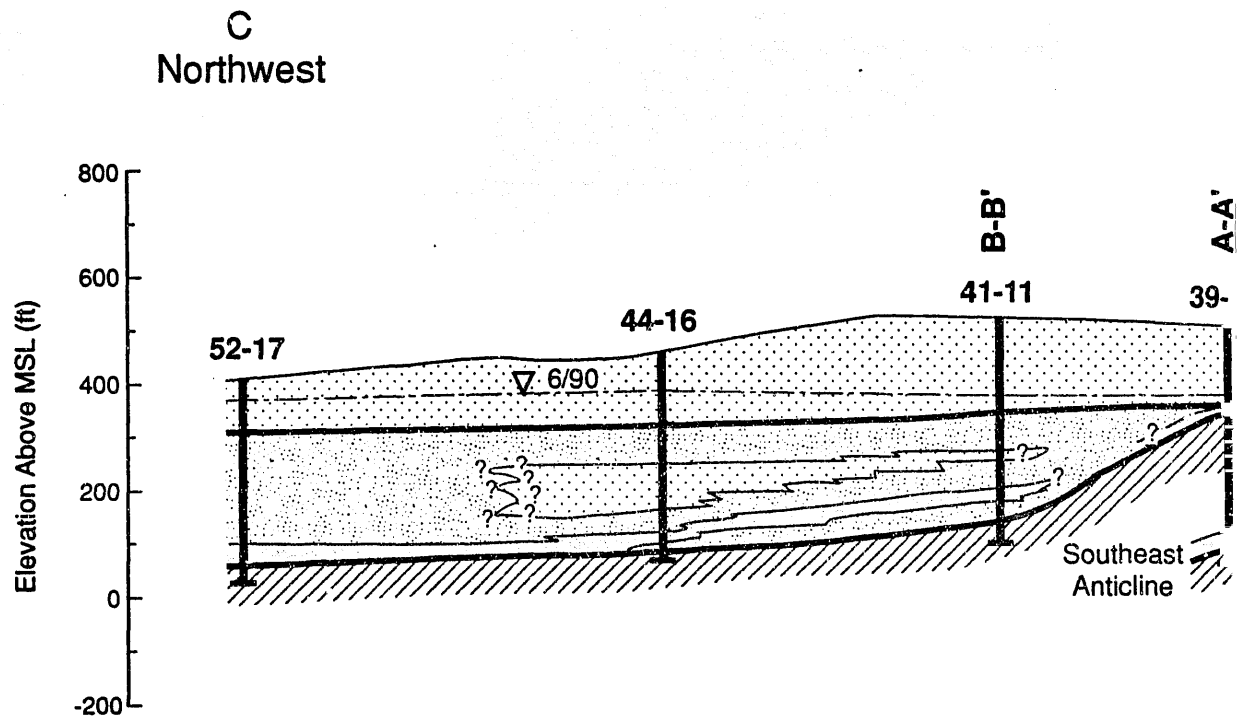

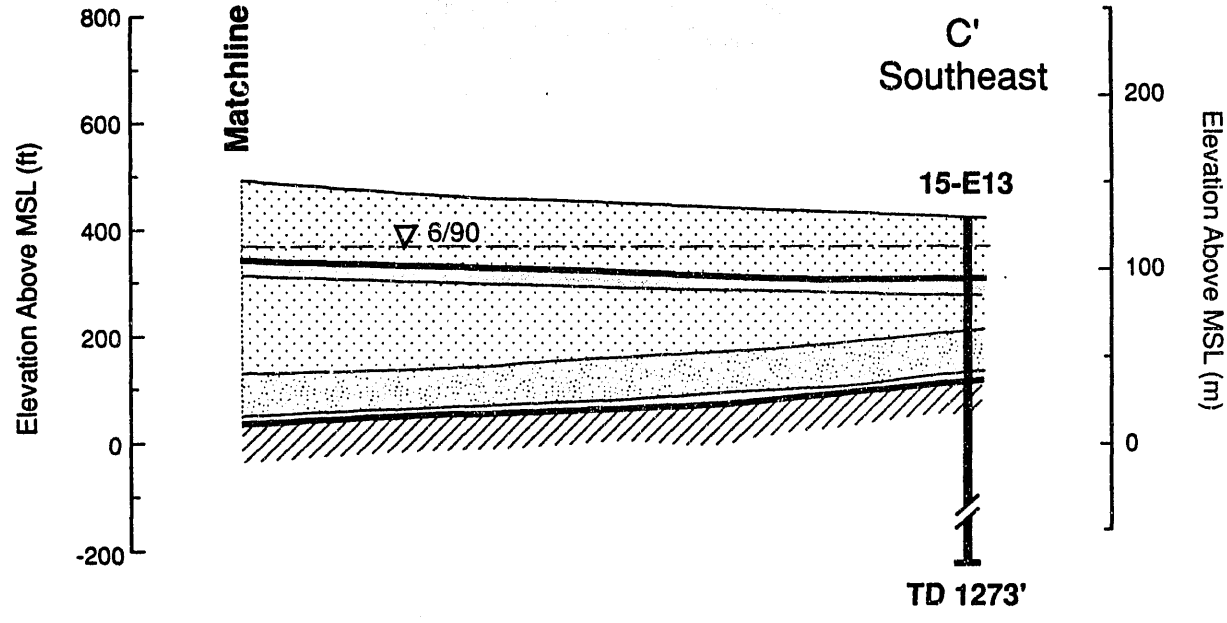

FIGURE 10. Cross Section (

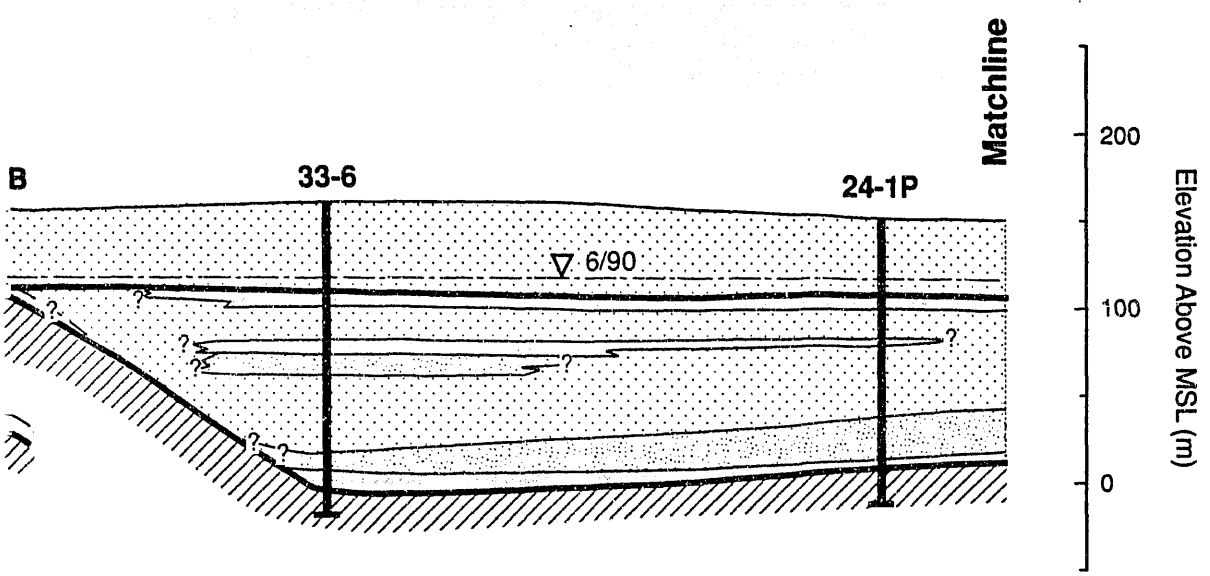

Vertical Exaggeration 10X

0 2000 Feet

0 500 Meters

Mud, Sand, and Gravel

Sand

Silt and Clay

Basalt

40-12

Well: Numbers Start with 699-

Water levels measured from Newcomer et al. 1991

S9207035.3

(MSL = mean sea level)

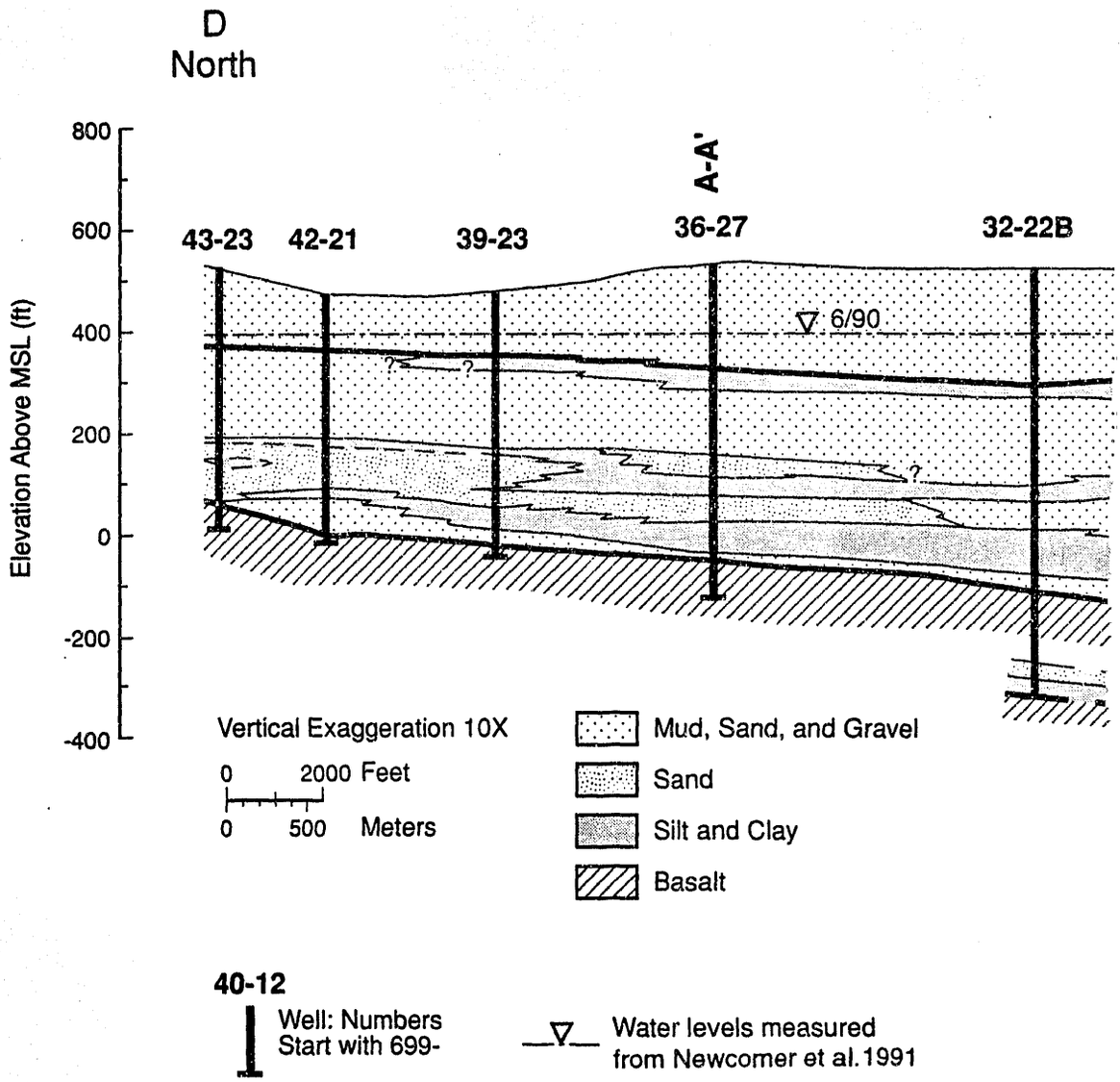

FIGURE 11. Cross Section I

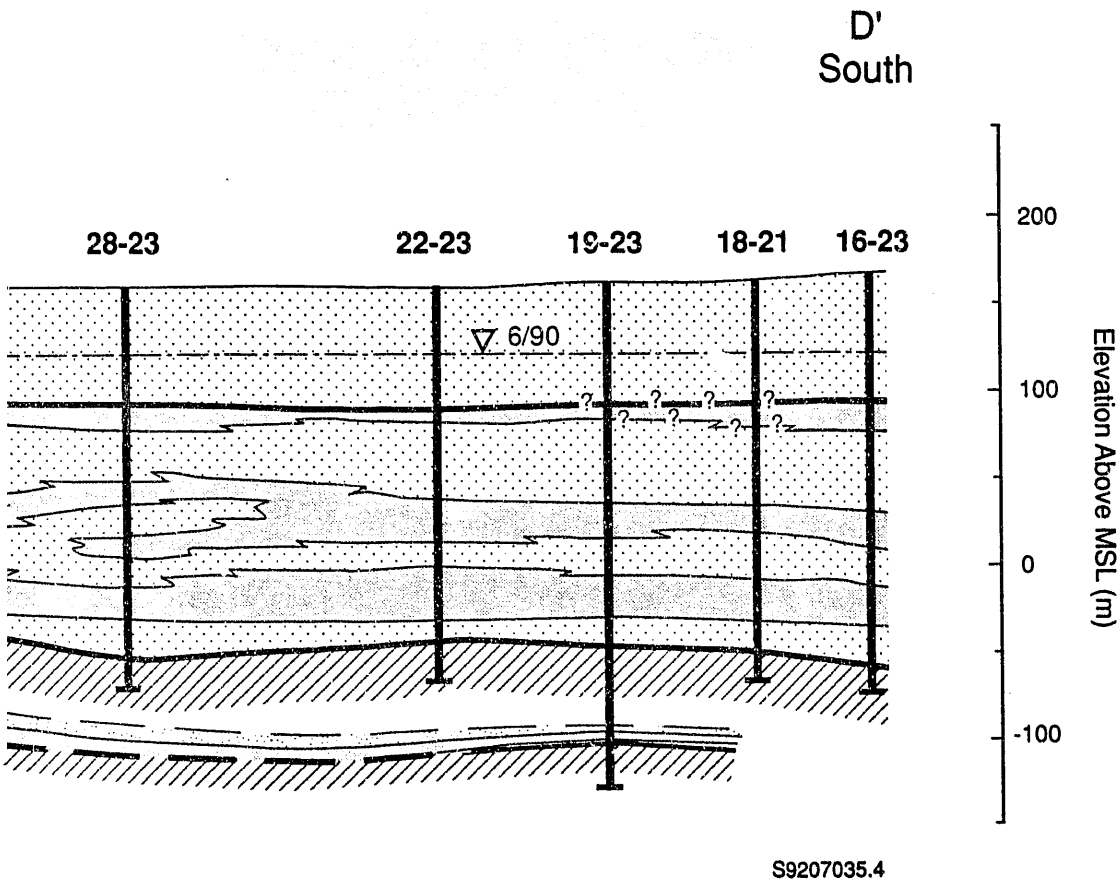

D' (MSL = mean sea level)

and which layers may have pinched out or been deposited across the anticline and then later eroded. The Hanford formation is the only unit that is definitely continuous across the anticline.

In addition, the Gable Mountain—Gable Butte—Southeast Anticline structure formed a barrier to migration of the ancient river channels. As a result, Ringold gravels are generally restricted to the area south and west of the structure.

Overlying the basalt in the western portion of the study area is a sand and gravel unit that pinches out along the southwestern flank of the Southeast Anticline (see Figures 8 and 11). This unit does not appear to be represented on the northeastern side of the Southeast Anticline. Lying above the lower sand and gravel unit is a silt and clay unit that thickens from the western portion of the study area toward the Southeast Anticline. This unit lies directly above the basalt near the southwestern side of the anticline (see Figures 9 and 10). A silt and clay unit is also found just above the basalt both near the top of the anticline (Figures 8 and 10) and on the eastern side of the anticline (Figures 8, 9, and 10). However, there was apparently no silt and clay overlying the basalt at well 699-43-9, near the top of the anticline (Figure 9).

Above the lowermost silt and clay unit is a sand to sandy gravel layer that varies in thickness but appears to be continuous on both sides of the anticline and throughout the study area.

A somewhat discontinuous clay to silt layer lies above the sandy layer (middle silt and clay layer in Figures 8 through 11).

A relatively thick, silty, sandy gravel unit corresponding to the middle Ringold unit (Tallman et al. 1979) lies above this middle clay and silt layer and appears to be present on both sides of the anticline, although it appears to be finer-textured on the northeastern side of the anticline (Figure 10). Remnants of a clay and silt layer, corresponding to the upper Ringold unit (Tallman et al. 1979), are present over much of the study area, but are not found in the western and northernmost portions of the area. And finally, overlying this clay and silt, or the silty, sandy gravel of the middle Ringold unit, are sands and gravels of the Hanford formation and Pre-Missoula unit.

As discussed above, these sediments are not easily distinguished unless observed directly and are not called out separately in this report. The Hanford and Pre-Missoula combined range in thickness from less than 20 m near the Columbia River (Figures 8 and 9) to more than 90 m near the 200-East Area (west portion of Figure 8).

HYDRAULIC PROPERTY DISTRIBUTIONS

The principal hydraulic properties affecting flow through the aquifer are horizontal hydraulic conductivity, vertical hydraulic conductivity, and porosity. Distributions of these properties must be assigned to each of the hydrogeologic layers within the flow system. The horizontal conductivity is assumed to be isotropic in two dimensions. Poeter and Gaylord (1990) have noted directional trends in the distribution of gravel-dominated lithofacies that are thought to represent the direction of stream channel formation. However, these trends are expected to be incorporated in the definition of layers representing these types of coarse deposits. On the other hand, vertical hydraulic conductivity is expected to be significantly lower than horizontal conductivity because of features such as particle orientation and the existence of thin horizontal beds within defined layers.

As discussed above, an attempt has been made to define hydrogeologic layers with similar textures, which control hydraulic properties. For the conceptual model, one of two approaches may be used in assigning hydraulic properties to the defined layers. An average "best estimate" of the hydraulic properties for a particular layer may be assigned to the entire layer, or an areal distribution of hydraulic properties may be defined for the layer. The first approach ignores heterogeneity within the layers and may degrade the model, especially for contaminant transport predictions. Within the study area, the vast majority of ground-water flow and contaminant transport takes place within the uppermost coarse-grained layer of the aquifer. This layer generally corresponds to the gravels of the Hanford formation. Most of the available hydraulic property data also represent this layer. Therefore, a combined approach is proposed, in that areal hydraulic conductivity distributions be defined for the uppermost gravel layer and average values be assigned to other defined layers within the flow system.

Hydraulic property data from well tests in the study area are presented in Table 1. The depth of the test interval below the top of the aquifer is also given, and the type of sediment is identified. Figure 12 shows the locations of the test wells relative to the cross sections. Values and locations of known transmissivity for the uppermost layer are given in Figure 13. Whether these known hydraulic conductivity data values are adequate to represent the uppermost layer is one of the questions that must be addressed in refining the conceptual model. Additional testing is probably needed where there are gaps in the existing data. Therefore, contouring of the transmissivity distribution was not attempted.

Only a few porosity estimates are available for the unconfined aquifer in the study area because multiple well tests are required to determine this parameter accurately. The results range between 0.06 and 0.18 in the study area. For past modeling efforts, a constant porosity value has been assumed for the entire aquifer. Assigning a constant value to each layer may be a reasonable approach for the three-dimensional conceptual model.

Hydraulic property data generally are not available for the mud-dominated layers. However, the values assigned to these low-permeability layers will not have much of an effect on the flow system, so long as the conductivity values are orders-of-magnitude less than those of the permeable layers. Therefore, values may be assumed from available literature or determined from a few laboratory tests.

Additional hydrologic testing is needed to determine hydraulic conductivity and porosity of the deeper, relatively permeable layers. Existing wells have been identified that penetrate the deeper parts of the aquifer but require remediation to provide useful data. It is planned that some of these wells will be remediated to provide access for hydraulic testing of the deeper permeable layers. The wells will also provide needed information on hydrochemistry of the deeper layers and on the vertical distribution of hydraulic head.

TABLE 1. Transmissivity and Hydraulic Conductivity Estimates for Wells in and Near the Study Area

Well ID	Year of Test	Tested Interval (m below water table)	Transmissivity (m^2/s)	Tested Unit	Thickness (m)	Equivalent Hydraulic Conductivity (m/s)
15-26	1958	0 - 40.9	7.6×10^{-2}	Hanford Gravels	?	?
17-5	1958	0.1 - 8.4	1.2×10^{-3}	Composite Hanford and Ringold	13.7	8.6×10^{-5}
20-20	1958	0.4 - 15.7	3.4×10^{-2}	Hanford Gravels	?	?
24-33	1958	0 - 12.9	4.2×10^{-1}	Hanford Gravels	13.7	3.1×10^{-2}
24-34A	1987	0 - 1.6	3.8×10^{-1}	Hanford Gravels	18.3	2.1×10^{-2}
24-35	1987	0 - 1.9	2.9×10^{-1}	Hanford Gravels	18.3	1.6×10^{-2}
25-33A	1986	30.3 - 39.4	4.8×10^{-5}	Ringold	15.2	3.2×10^{-6}
26-15A	1958	0 - 32.4	9.0×10^{-3}	Composite Hanford and Ringold	14.6	6.2×10^{-4}
26-35C	1986	0.3 - 11.2	1.1×10^{-1}	Hanford Gravels	18.3	5.9×10^{-3}
26-35C	1986	17.6 - 22.5	2.7×10^{-3}	Ringold Sand and Gravel	4.6	5.9×10^{-4}
31-31	1958	3.3 -126.7	2.7×10^{-1}	Hanford Gravels	10.7	2.5×10^{-2}
31-53A	1959	0 - 36.9	1.5×10^{-2}	Composite Hanford and Ringold	36.6	4.1×10^{-4}
33-56	1958	2.1 - 39.6	1.2×10^{-3}	Composite Hanford and Ringold	26.8	4.4×10^{-5}
35-9	1977	0 - 6.6	1.6×10^{-2}	Hanford Gravels	15.2	1.1×10^{-3}
36-61A	1969	5.2 - 14.6	4.2×10^{-3}	Ringold Sand and Gravel	19.8	2.1×10^{-4}
40-1	?	10.1 - 57.4	3.2×10^{-2}	Hanford Gravels	15.2	2.1×10^{-3}
40-33A	1958	0 - 23.9	2.2×10^{-4}	Ringold	48.8	4.4×10^{-6}
41-23	1958	0 - 14.4	3.0×10^{-2}	Composite Hanford and Ringold	?	?
42-12A	1958	1.6 - 62.5	9.2×10^{-2}	Composite Hanford and Ringold	39.6	2.3×10^{-3}
42-40C	1982	1.7 - 13.9	4.6×10^{-4}	Ringold Sand and Gravel	?	?
42-42B	1988	9.4 - 12.4	1.5×10^{-4}	Ringold Sand and Gravel	?	?
43-43	1988	0.5 - 6.0	4.0×10^{-2}	Hanford Gravels	5.5	7.3×10^{-3}
44-42	1988	0 - 4.5	8.2×10^{-2}	Hanford Gravels	5.5	1.5×10^{-2}
46-21B	?	0 - 6.3	4.2×10^{-3}	Ringold Sand and Gravel	40.5	1.0×10^{-4}
47-35C	1979	1.5 - 11.5	5.7×10^{-4}	Ringold Sand and Gravel	13.4	4.2×10^{-5}
47-60	1969	1.0 - 9.2	3.5×10^{-3}	Ringold Sand and Gravel	12.5	2.8×10^{-4}

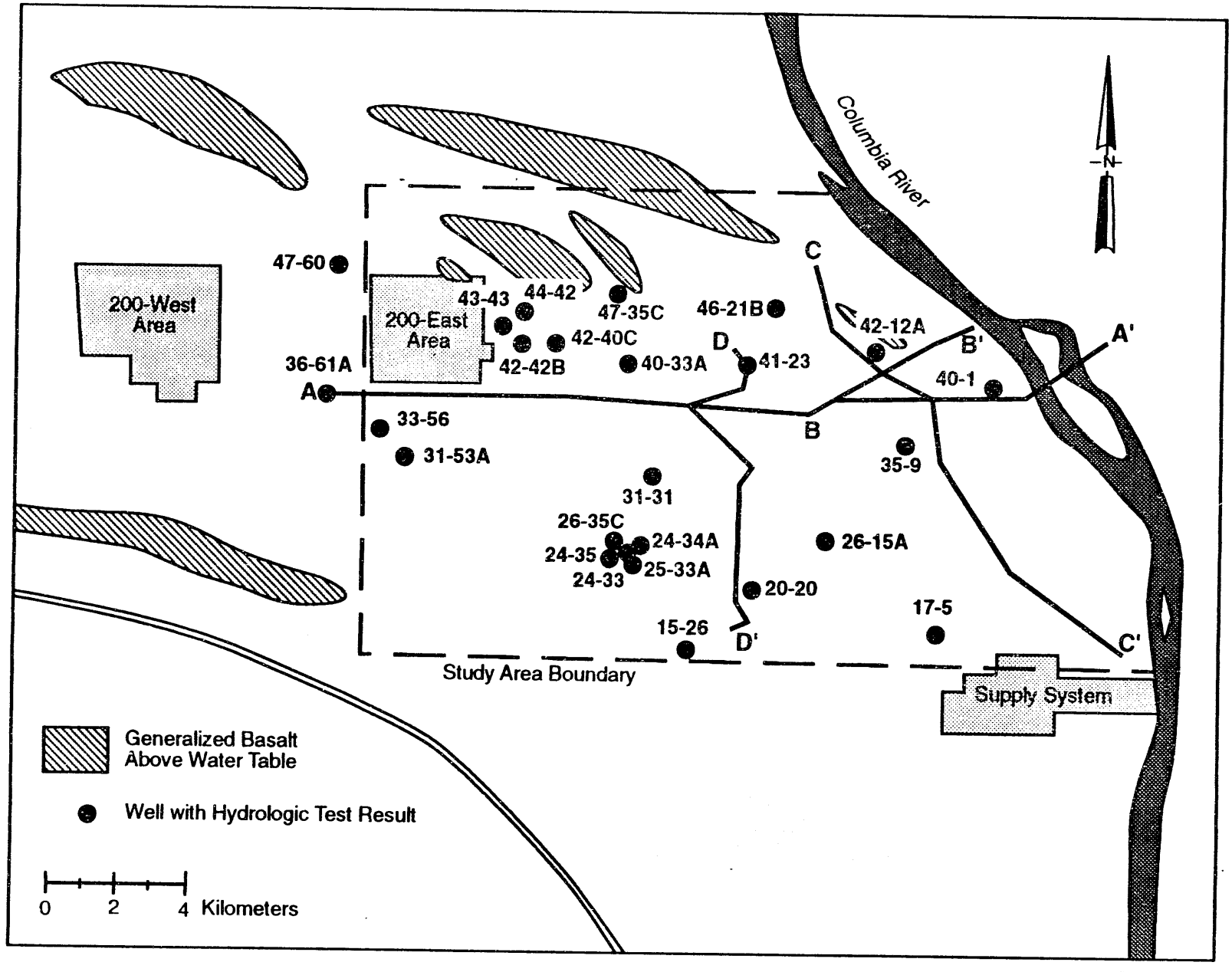

S9208070.5

FIGURE 12. Locations of Hydraulic Property Estimates

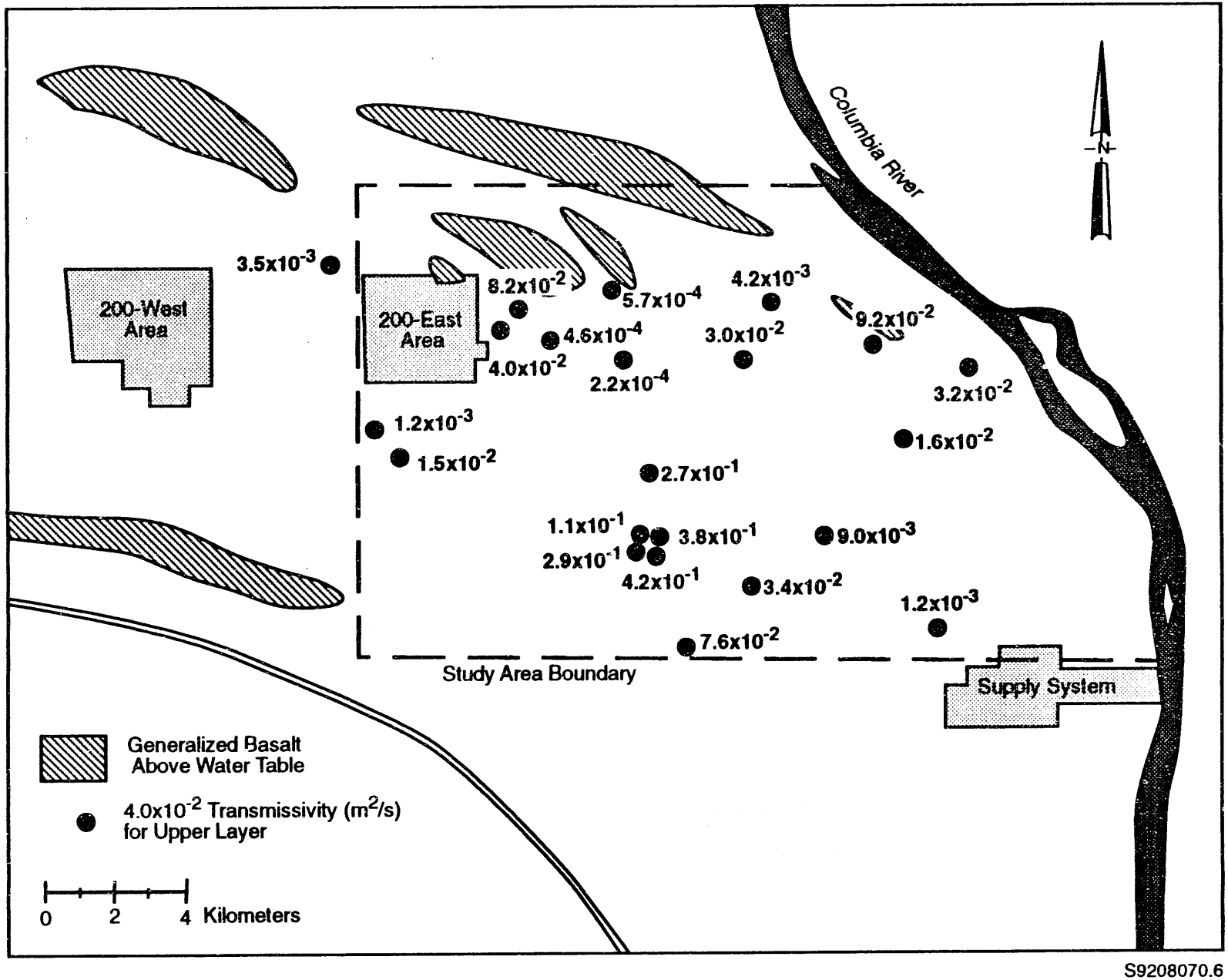

S9208070.6

FIGURE 13. Known Transmissivity Values for the Upper Layer

AREAL RECHARGE

Areal recharge represents a flux input to the upper layer of the flow system. Because of the low annual precipitation (16.5 cm/yr) and high potential evaporation (165 cm/yr), the amount of aquifer recharge from precipitation on the Hanford Site is relatively low. However, the actual amount has been found to be widely variable depending on soil type and vegetation. Gee and Heller (1985) estimated recharge by a variety of methods and for several different locations on the Hanford Site. Recharge of 0.3 to 2.5 cm/yr was determined from lysimeter investigations in the 200 Areas. Neutron probe measurements of an uncased borehole at the same site resulted in possible recharge of 0.03 to 5 cm/yr. They also examined the depth of penetration of tritium in precipitation resulting from off-site atomic weapons tests. Tritium-enriched precipitation had penetrated to a depth of 4.9 m between the early 1950s and 1969. This was found to be consistent with a recharge rate of 2 cm/yr. Studies of lysimeters near the 300 Area have resulted in recharge estimates of up to 7.5 cm/yr for coarse-grained soils that are bare or covered with sparse desert grasses. However, essentially no recharge has been observed at some lysimeters where shrubs and other deep-rooted plants are present (Gee and Heller 1985; Gee et al. 1989). The U.S. Geological Survey (Bauer and Vaccaro 1990) applied a model to determine the distribution of recharge across the Hanford Site. Results are shown in Figure 14 and ranged from about 0 to 5 cm/yr. The significance of areal recharge on the numerical flow model may be determined in the calibration process.

VERTICAL LEAKAGE

There is a potential for vertical upward leakage of ground water from the uppermost confined aquifer to the unconfined aquifer system in the study area. A comparison of measured hydraulic heads in the unconfined aquifer and the upper confined aquifer (Figure 15) shows a potential for downward leakage of ground water in the western portion of the Hanford Site and a potential for upward leakage in the eastern portion of the Hanford Site. The amount and the distribution of leakage between these aquifers are unknown but have been assumed to be relatively insignificant.

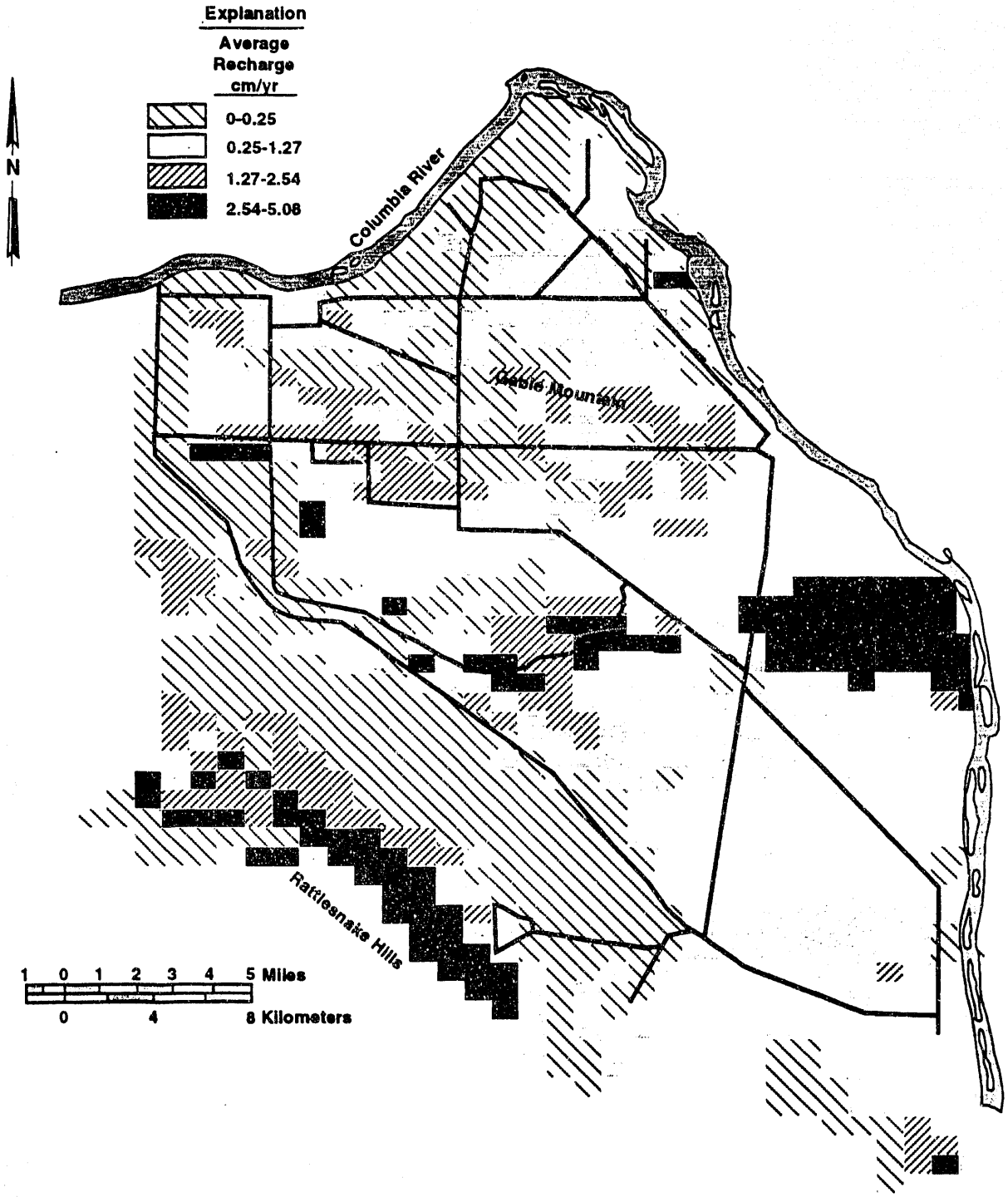

S9208070.1

FIGURE 14. Areal Distribution of Recharge for the Hanford Site as Modeled by the U.S. Geological Survey (Bauer and Vaccaro 1990)

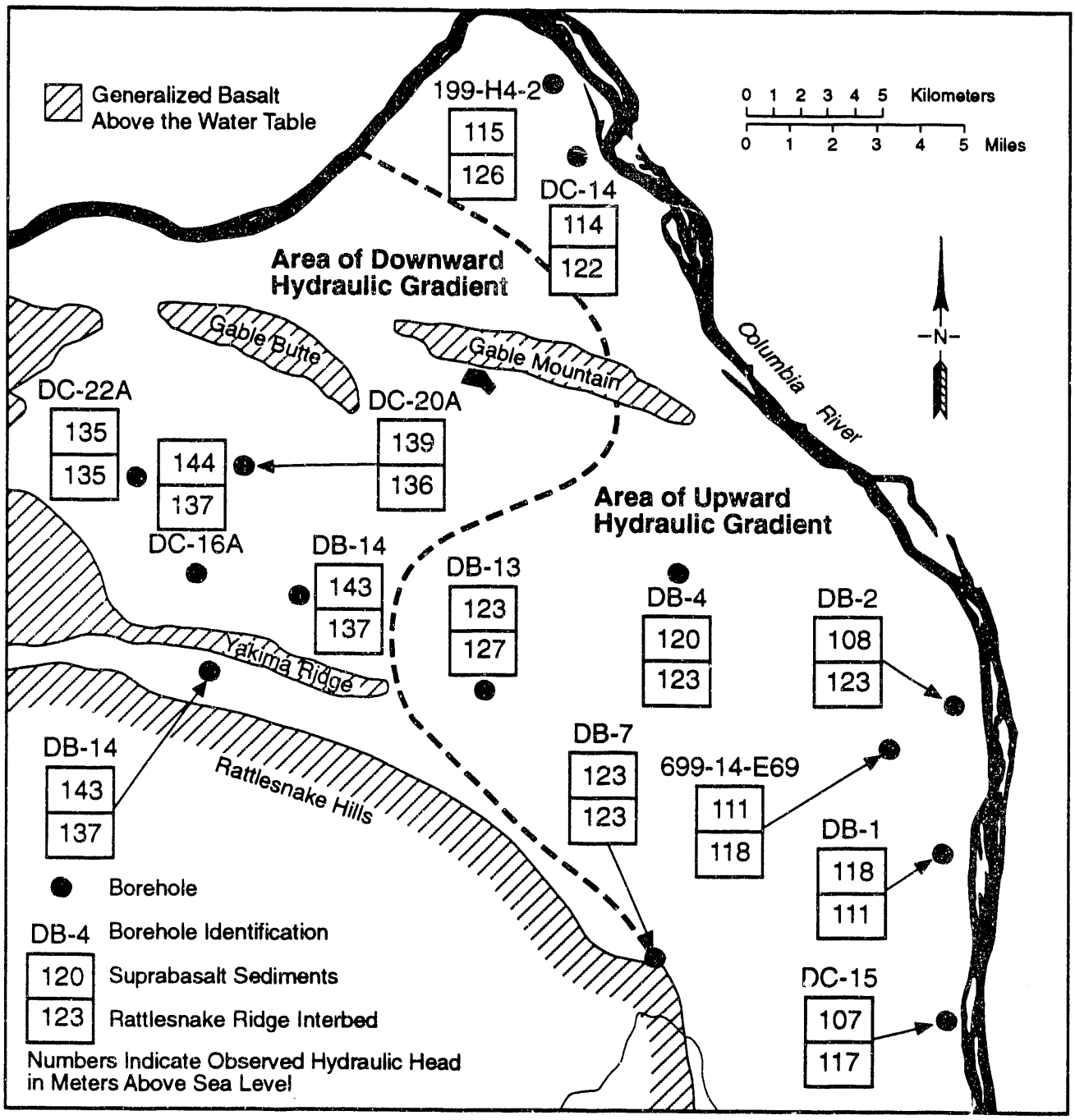

FIGURE 15. Comparison of Observed Hydraulic Heads in the Upper Confined Aquifer System and the Unconfined Aquifer System (after DOE 1988)

Specific areas of enhanced vertical communication have been identified, particularly in the Gable Gap area north of the 200-East Area (Graham et al. 1984; Jensen 1987). This is probably caused by a combination of the deformation that formed the Gable Mountain—Gable Butte anticline, and localized erosion of the upper confining layers by prehistoric channels that are now buried. Disposal of waste water to ponds in this area has increased hydraulic heads in the unconfined aquifer and may have reversed the vertical flow direction. Evidence from ground-water chemistry indicates that the direction of ground-water flow in this area may have been upward, from the Saddle Mountains Basalt to the unconfined aquifer, prior to waste disposal activities (Early et al. 1988).

REFERENCES

Bauer, H. H., and J. J. Vaccaro. 1990. Estimates of Ground-Water Recharge to the Columbia Plateau Regional Aquifer System, Washington, Oregon, and Idaho for Predevelopment and Current Land Use Conditions. Water Resources Investigation Report 88-4108, U.S. Geological Survey, Tacoma, Washington.

Bauer, H. H., J. J. Vaccaro, and R. C. Lane. 1985. Maps Showing Ground-Water Levels in the Columbia River Basalt and Overlying Materials, Spring 1983, Southeastern Washington. Water Resources Investigation Report 84-4360, U.S. Geological Survey, Tacoma, Washington.

Bjornstad, B. N. 1984. Suprabasalt Stratigraphy Within and Adjacent to the Reference Repository Location. SD-BWI-DP-039, Rockwell Hanford Operations, Richland, Washington.

Bjornstad, B. N. 1985. "Late-Cenozoic Stratigraphy and Tectonic Evolution Within a Subsiding Basin, South-Central Washington." Geological Society of America Abstracts with Programs 17(7):524.

Bjornstad, B. N., and K. R. Fecht. 1989. "Pre-Wisconsin Glacial Outburst Floods: Pedogenic and Paleomagnetic Evidence from the Pasco Basin and Adjacent Channeled Scabland." Geological Society of America Abstracts with Programs 21(5):58.

DOE (see U.S. Department of Energy)

Early, T. O., S. H. Hall, and V. G. Johnson. 1988. Tritium, Carbon-14 and Iodine-129 as Indicators of Vertical Recharge Along an Anticline in the Columbia River Basalts Using a Decay-Corrected Mixing Model. Ground Water Geochemistry Conference Proceedings, Association of Ground Water Scientists and Engineers, Denver, Colorado.

Gaylord, D. R., and E. P. Poeter. 1988. Annual Report of Geologic and Geohydrologic Site Characterization Studies During FY88, Hanford Reservation, Washington and Proposal for FY89 Research Activities. Washington State University, Pullman, Washington.

Gee, G. W., and P. R. Heller. 1985. Unsaturated Water Flow at the Hanford Site: A Review of Literature and Annotated Bibliography. PNL-5428, Pacific Northwest Laboratory, Richland, Washington.

Gee, G. W., M. L. Rockhold, and J. L. Downs. 1989. Status of FY 1988 Soil-Water Balance Studies on the Hanford Site. PNL-6750, Pacific Northwest Laboratory, Richland, Washington.

Graham, M. J., G. V. Last, and K. R. Fecht. 1984. An Assessment of Aquifer Intercommunication in the B Pond, Gable Mountain Pond Area. RHO-RE-ST-12P, Rockwell Hanford Operations, Richland, Washington.

Jensen, E. J. 1987. An Evaluation of Aquifer Intercommunication Between the Unconfined and Rattlesnake Ridge Aquifers on the Hanford Site. PNL-6313, Pacific Northwest Laboratory, Richland, Washington.

Kipp, K. L., and R. D. Mudd. 1974. Selected Water Table Contour Maps and Well Hydrographs for the Hanford Reservation, 1944 - 1973. BNWL-B-360, Pacific Northwest Laboratory, Richland, Washington.

Lindsey, K. A. 1991. Revised Stratigraphy for the Ringold Formation, Hanford Site, South-Central Washington. WHC-SD-EN-EE-004, Westinghouse Hanford Company, Richland, Washington.

Lindsey, K. A., B. N. Bjornstad, J. W. Lindberg, and K. M. Hoffman. 1992. Geologic Setting of the 200 East Area; An Update. WHC-SD-EN-TI-012, Westinghouse Hanford Company, Richland, Washington.

Luttrell, S. P., D. R. Newcomer, S. S. Teel, and V. R. Vermeul. 1992. Hydrogeologic Controls on Ground-Water and Contaminant Discharge to the Columbia River in the Hanford Townsite Vicinity. PNL-8167, Pacific Northwest Laboratory, Richland, Washington.

McGhan, V. L. 1989. Hanford Wells. PNL-6907, Pacific Northwest Laboratory, Richland, Washington.

Myers, C. W., and S. M. Price, eds. 1979. Geological Studies of the Columbia Plateau - A Status Report. RHO-BWI-ST-4, Rockwell Hanford Operations, Richland, Washington.

Newcomb, R. C. 1958. "Ringold Formation of the Pleistocene Age in Type Locality, The White Bluffs, Washington." American Journal of Science 256:328-340.

Newcomb, R. C., J. R. Strand, and F. J. Frank. 1972. Geology and Ground-Water Characteristics of the Hanford Reservation of the U.S. Atomic Energy Commission, Washington. Prof. Paper 717, U. S. Geological Survey, Washington, D.C.

Newcomer, D. R. 1990. Evaluation of Hanford Site Water-Table Changes - 1980 to 1990. PNL-7498, Pacific Northwest Laboratory, Richland, Washington.

Newcomer, D. R., K. D. Pohlod, and J. P. McDonald. 1991. Water-Table Elevations on the Hanford Site, 1990. PNL-7693, Pacific Northwest Laboratory, Richland, Washington.

Poeter, E., and D. R. Gaylord. 1990. "Influence of Aquifer Heterogeneity on Contaminant Transport at the Hanford Site." Ground Water 28:900-909.

Puget Sound Power and Light (PSPL). 1982. Skagit/Hanford Nuclear Project, Preliminary Safety Analysis Report. App. 20, Amendment 23, Puget Sound Power and Light Company, Bellevue, Washington.

Reidel, S. P., R. K. Ledgerwood, C. W. Myers, M. G. Jones, and R. D. Landon. 1980. "Rate of Deformation in the Pasco Basin During the Miocene as Determined by Distribution of Columbia River Basalt Flows." Geological Society of America Abstracts with Programs 12(3):149.

Spane, F. A., Jr. 1987. Fresh-Water Potentiometric Map and Inferred Flow Direction of Ground Water Within the Mabton Interbed, Hanford Site, Washington State - January 1987. SD-BWI-TI-335, Rockwell Hanford Operations, Richland, Washington.

Tallman, A. M., K. R. Fecht, M. C. Marratt, and G. V. Last. 1979. Geology of the Separations Areas, Hanford Site, South-Central Washington. RHO-ST-23, Rockwell Hanford Operations, Richland, Washington.

U.S. Department of Energy (DOE). 1988. Consultation Draft, Site Characterization Plan, Reference Repository Location, Hanford Site, Washington. DOE/RW-0164, Vol. 1 and 2, U.S. Department of Energy, Richland, Washington.

U.S. Geological Survey (USGS). 1987. Subsurface Transport of Radionuclides in Shallow Deposits of the Hanford Nuclear Reservation, Washington - Review of Selected Previous Work and Suggestions for Further Study. Open File Report 87-222, U.S. Geological Survey, Tacoma, Washington.

Zimmerman, D. A., A. E. Reisenauer, G. D. Black, and M. A. Young. 1986. Hanford Site Water-Table Changes, 1950 Through 1980 - Data Observations and Evaluation. PNL-5506, Pacific Northwest Laboratory, Richland, Washington.

DISTRIBUTION

No. of
Copies

OFFSITE

12 DOE/Office of Scientific and Technical Information

C. Cline
Washington State Department of Ecology
MS 7600
99 South Sound Center
Olympia, WA 98504-7600

P. T. Day B5-01
U. S. Environmental Protection Agency
P.O. Box 550
Richland, WA 99352

J. Erickson
Washinton State Department of Health
Division of Radiation Protection
Airdustrial Center
Building 5, MS L-13
Olympia, WA 98503

D. Jansen
Washington State Department of Ecology
MS 7600
99 South Sound Center
Olympia, WA 98504-7600

K. Kowalic
Washington State Department of Ecology
MS 7600
99 South Sound Center
Olympia, WA 98504-7600

D. Nilander
Washington State Department of Ecology
7601 West Clearwater
Suite 102
Kennewick, WA 99336

D. R. Sherwood B5-01
U.S. Environmental Protection Agency
P.O. Box 550
Richland, WA 99352

ONSITE

12 DOE Richland Field Office

M. J. Furman	A5-21
E. D. Goller	A5-19
J. D. Goodenough	A5-19
A. C. Harris	A5-19
R. D. Hildebrand	A5-55
R. G. Holt	A5-15
R. G. McLeod	A5-19
P. M. Pak	A5-19
R. K. Stewart	A5-19
K. M. Thompson	A5-15
M. W. Tiernan	A5-55
Public Reading Room	

23 Westinghouse Hanford Company

M. R. Adams	H4-55
G. D. Carpenter	B2-16
L. B. Collard	H4-14
L. P. Diediker	T1-30
J. J. Dorian	B2-16
K. R. Fecht	H4-56
K. A. Gano	X0-21
E. M. Greager	L6-60
L. C. Hulstrom	H4-55
R. L. Jackson	H4-56
V. G. Johnson	H5-29
A. J. Knepp	H4-56
M. J. Lauterbach	H4-55
A. G. Law	H4-56
S. M. McKinney	T1-30
D. L. Parker	H4-55

No. of Copies		
	R. E. Peterson	H4-56
	J. W. Roberts	H4-55
	J. A. Serkowski	H4-56
	L. C. Swanson	H5-29
	S. J. Trent	H4-56
	S. E. Vukelich	H4-55
	C. D. Wittreich	H4-55
26	Pacific Northwest Laboratory	
	B. N. Bjornstad	K6-96
	J. V. Borghese	K6-96
	R. W. Bryce	K6-96
	M. A. Chamness (3)	K6-96
	P. G. Doctor	K6-96
	M. D. Freshley	K6-77
	G. V. Last	K6-96
	S. P. Luttrell	K6-96
	D. R. Newcomer	K6-96
	D. A. Perez	K6-86
	F. A. Spane	K6-96
	S. S. Teel	K6-96
	P. D. Thorne (5)	K6-96
	Publishing Coordination Technical Report Files (5)	
	Routing	
	R. M. Ecker	SEQUI
	M. J. Graham	K6-80
	C. J. Hostetler	K6-81
	P. M. Irving	K6-98
	R. L. Skaggs	K6-77
	C. S. Sloane	K6-04
	P. C. Hays (last)	K6-86

END

DATE
FILMED
4/20/93