CONF-8608123--9

BNL 38917

10/31/86

OG 930

BNL--38917

DE87 003204

STATUS OF SWITCHED-POWER LINAC STUDIES AT BNL AND CERN

Samuel Aronson

Brookhaven National Laboratory, Upton, NY 11973

Talk given at Symposium on Advanced Accelerator Concepts

Wisconsin University

Madison, WI 53706

August 21-27, 1986

MASTER

DISCLAIMER

This report was prepared as an account of work sponsored by an agency of the United States Government. Neither the United States Government nor any agency thereof, nor any of their employees, makes any warranty, express or implied, or assumes any legal liability or responsibility for the accuracy, completeness, or usefulness of any information, apparatus, product, or process disclosed, or represents that its use would not infringe privately owned rights. Reference herein to any specific commercial product, process, or service by trade name, trademark, manufacturer, or otherwise does not necessarily constitute or imply its endorsement, recommendation, or favoring by the United States Government or any agency thereof. The views and opinions of authors expressed herein do not necessarily state or reflect those of the United States Government or any agency thereof.

DISTRIBUTION OF THIS DOCUMENT IS UNLIMITED

STATUS OF SWITCHED-POWER LINAC STUDIES AT BNL AND CERN

Samuel Aronson*
Brookhaven National Laboratory, Upton, NY 11973

I. INTRODUCTION

The Switched Power Linac[1], as recently proposed by Willis[2] for use in very high gradient particle accelerators, is under active investigation at a number of laboratories. At BNL and CERN there is work in progress on the properties of laser-induced vacuum photodiode switching and of radial transmisson lines. This paper summarizes the present status of that work.

The Switched-Power Linac (SPL) concepts are reviewed briefly in section II. Section III discusses recent work on computer-modelling of the photo emission process at the photocathode; section IV deals with the experimental study of this process. In section V the work on RF-modelling the properties of the radial transmission line is outlined. Section VI summarizes the present status and lists the steps expected to be taken in this area in the near future.

II. THE SWITCHED-POWER LINAC

The fundamental idea is the use of fast switching techniques to power a linear accelerating structure, producing short single (or few) pulses, as opposed to long pulse trains of RF or microwave power. In the scheme under consideration here, the switch and the accelerating structure are integrated as depicted in Figure 1. The structure is a series of disks with a central hole; each pair of disks acts like a radial transmission line, coupling the energy switched at the circumference to the beam which passes through the hole. The switch is a kind of vacuum photodiode, consisting of a continuous wire (made of a good photo-emitting material) which is held between pairs of disks at the periphery. The wire is charged to a negative potential relative to the disks. A very short pulse of laser light illuminating the wire liberates charge which moves in the field between the wire and the disk. This results in a very short pulse of electric field which propagates toward the center of the disks, producing an accelerating field felt by an appropriately timed pulse of particles travelling on the axis of the structure. The same sequence of events (appropriately phased) occurs in each gap.

The features which make such a concept attractive are partially shared with other new concepts for high gradient acceleration and partially unique. The use of small structures (and beam pulses) together with short pulses (or high frequency) leads to high peak power with low stored energy and consequently limited heating of components. The distribution of the power source over the whole surface of

*This research supported by the U.S. Dept. of Energy under contract DE-AC02-76CH00016

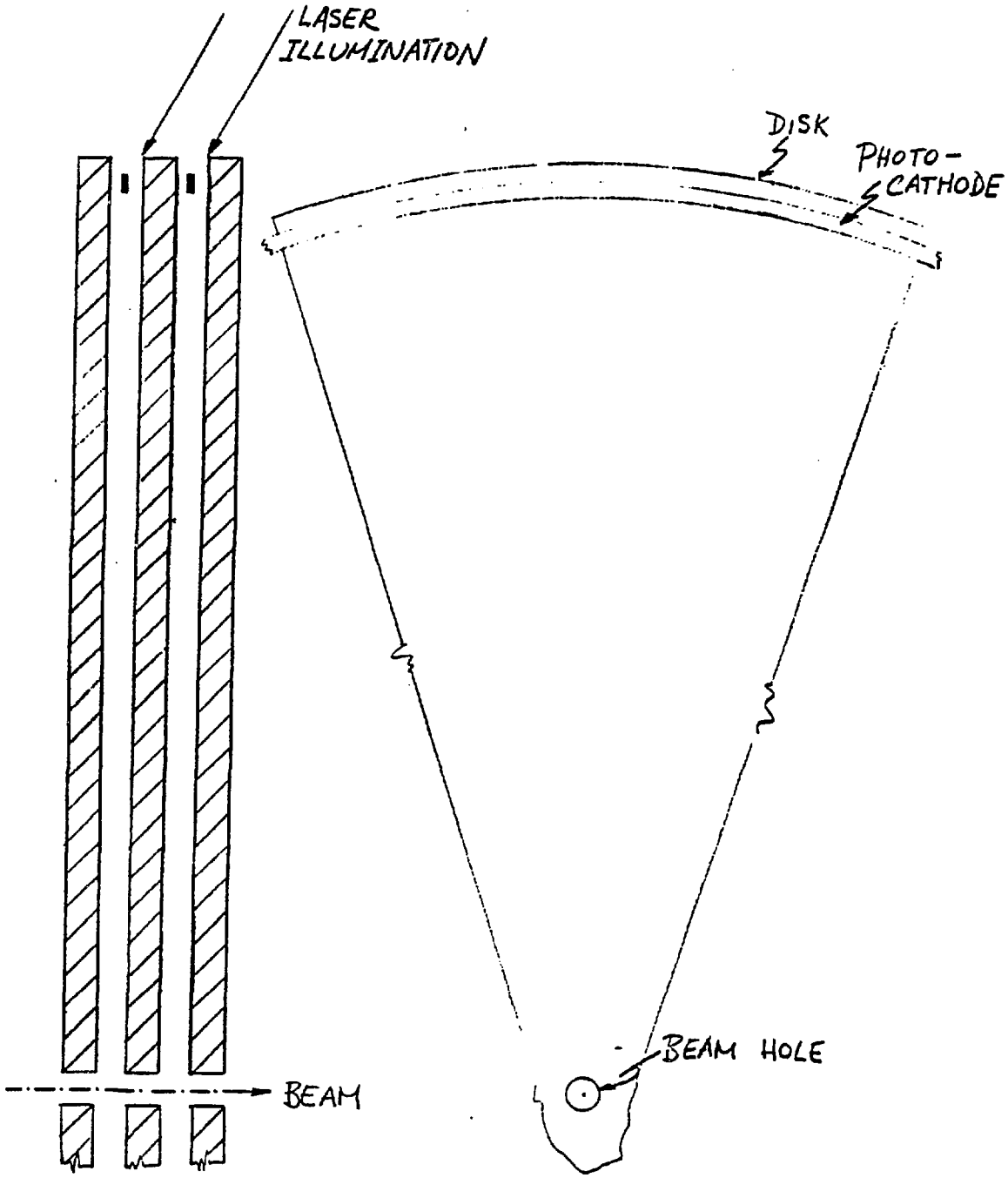

Fig. 1. Schematic depiction of the SPL, showing a portion of the disk and photocathode in a few unit cells.

the structure in the present concept gives the possibility of a high power density in a compact structure and hence a high accelerating gradient.

The Table lists some parameters of the scheme and of a conceptual large-scale accelerator.

Table I

Parameters for SPL Accelerator (E_{beam} = 1 TeV, L = $10^{33} s^{-1} cm^{-2}$)

I. Unit Cell	
Disk radius - outer	120 mm
- inner (beam hole)	1 mm
Thickness of disk	2 mm
Gap between disks	2 mm
Photodiode capacitance	16 pF
Charging voltage	75 kV
Stored energy/gap	45 mJ
Pulse length	10 ps
Optical energy/gap (0.5% quantum efficiency)	1.1 mJ
Switchable power/gap	4.5 GW
Gradient on axis in the gap	0.6 GV/m
II. 1 TeV Accelerator	
Average gradient	0.3 TV/km
Length per beam	3.3 km
Stored energy	22.5 kJ/km
III. Beams for L = $10^{33} s^{-1} cm^{-2}$	
No. of electrons/bunch	10^{10}
Bunch radius x length	0.1μm x 1 mm
Disruption parameter D	2
Beam radiation prameter δ	0.3
Repetition freq. f	2kHz

Several technological requirements and related problems suggest themselves. The desired high power density requires a high charging voltage and the problem of breakdown must be dealt with. It is clear that pulsed high voltage (with pulses < 1ns) will be required. This is discussed further in section IV. In order for a large system to be feasible, the switching process must be characterized by high gain (switched energy>>laser energy) and high efficiency (switched energy comparable to stored energy). These requirements in turn correspond to high photocathode quantum efficiency (see section IV), high laser efficiency, and efficient coupling of the photocathode to the accelerating structure (see section III). A high degree of symmetry and

uniformity is required in the system to minimize deflecting fields on the beam axis (see section V).

III. THE SWITCH (COMPUTER SIMULATION)

A basic SPL issue is the choice of switch technology. In the present paper we bypass this question and treat only the laser/vacuum photodiode case. Other options which are under study include the laser/solid state switch[3] and the laser/high pressure gas switch.[4] The emission of electrons from the photocathode wire has been modelled with the program MASK.[5-6] Figure 2 shows the geometry considered. Questions about efficiency vs. current density and electric field pulse shape can be asked. The simulation of a "laser pulse" consists in extracting a fraction of the charge on the wire in, typically, 2ps;

$$\Delta Q = Q_i - Q_f \tag{1}$$

Ideally, the electrons give up all their kinetic energy in moving to the disk, but in practice $\langle KE \rangle > 0$. Writing for the energy extracted from the photocathode

$$U_i = [Q_i^2 - Q_f^2]/2C \tag{2}$$

and the energy going into the field

$$U_{RF} = U_i - \Delta Q \langle KE \rangle, \tag{3}$$

we define the coupling efficiency of the photodiode to the radial line as

$$\eta \equiv U_{RF}/U_i. \tag{4}$$

Figure 3 shows typical results of the simulation, plotting η vs. current density J for two different separations between the wire and disk. (It should be emphasized that the large values of J result from dividing ΔQ by 2ps. The electric pulse produced is more like 10ps in width.) Two observations can be made from Figure 3: The maximum single-pulse efficiency is about 10% and is relatively insensitive to the drift distance. Also, there is a loss in efficiency beyond a certain current density; this is due to space charge effects. Detailed examination of pulse shapes and electron velocities confirm this. Figure 4 shows the achievable accelerating field near the photocathode with a single pulse. On the axis this field is further amplified by the action of the radial line, as discussed in section V below. Simulations of multi-pulse operation have been carried out, as shown in Figure 5, where roughly linear gain in efficiency is seen over several pulses, leading to a coupling efficiency in excess of 40%.

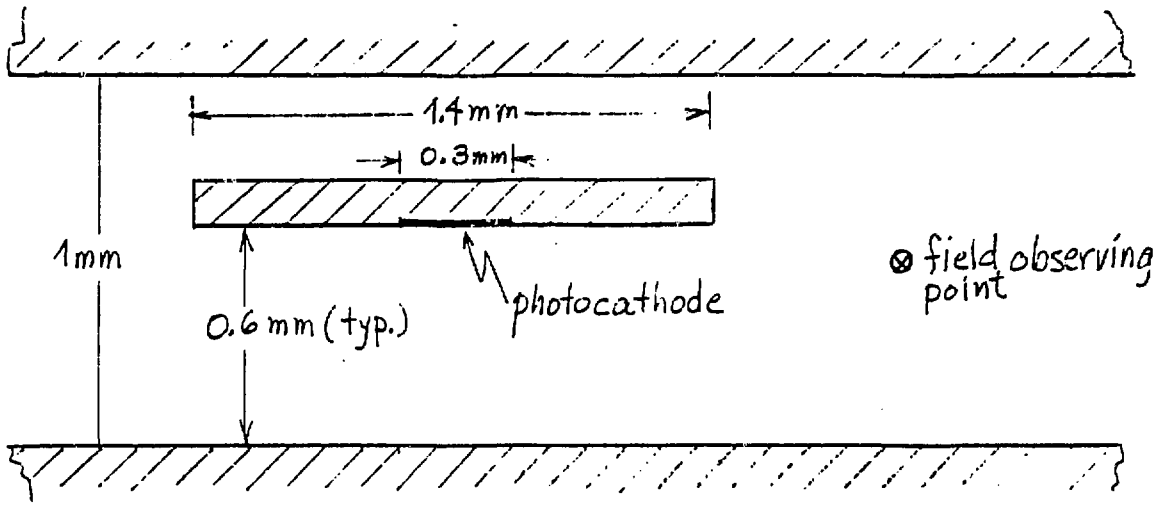

Fig. 2. Geometry of the photocathode and disks used in the MASK simulation of the coupling between the switch and radial line.

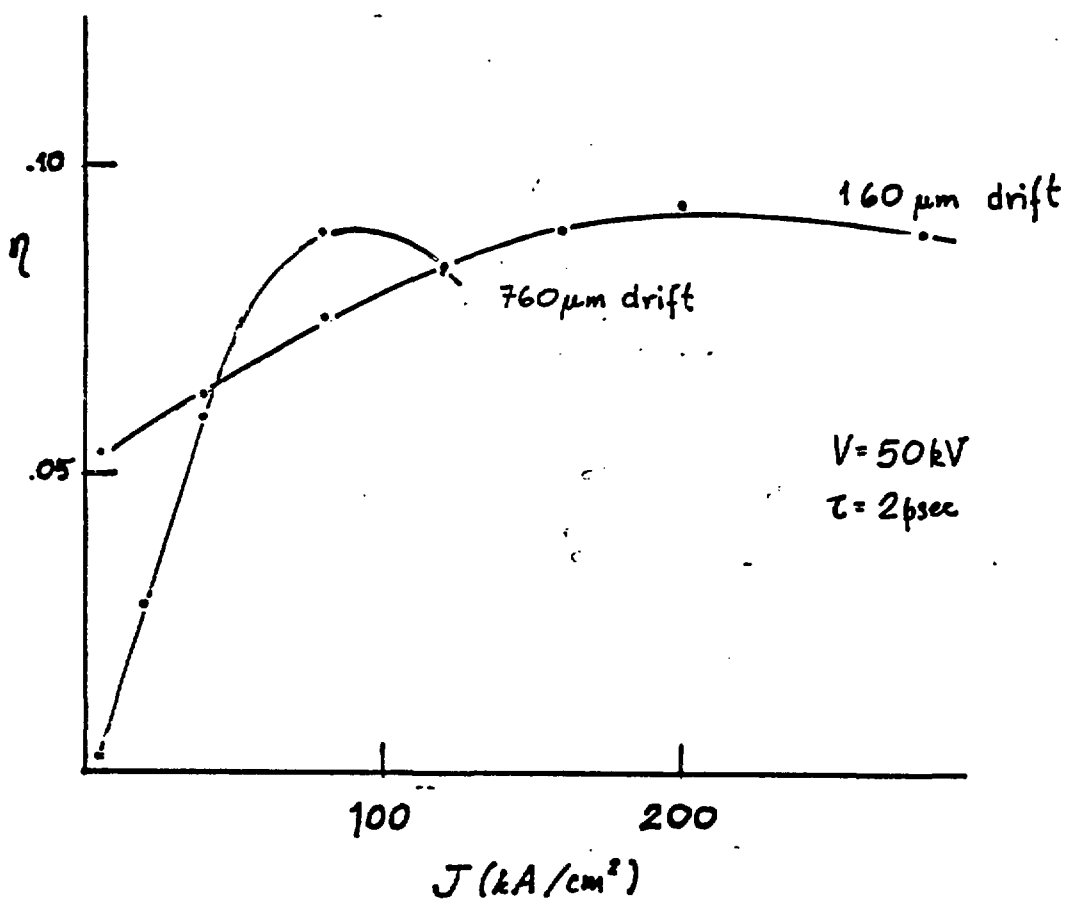

Fig. 3. Coupling efficiency with single-pulse discharge of the switch, as a function of drift space and current density.

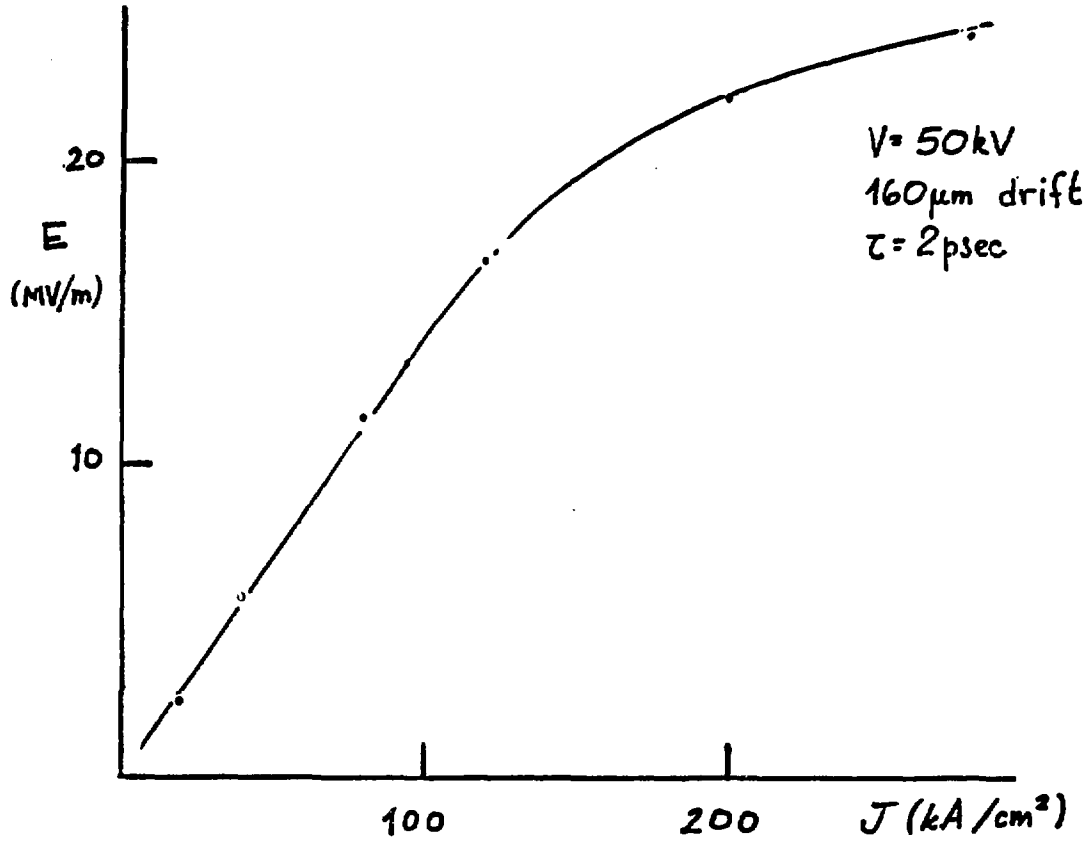

Fig. 4. Field produced at the field observing point (see Fig. 2) for single-pulse operation.

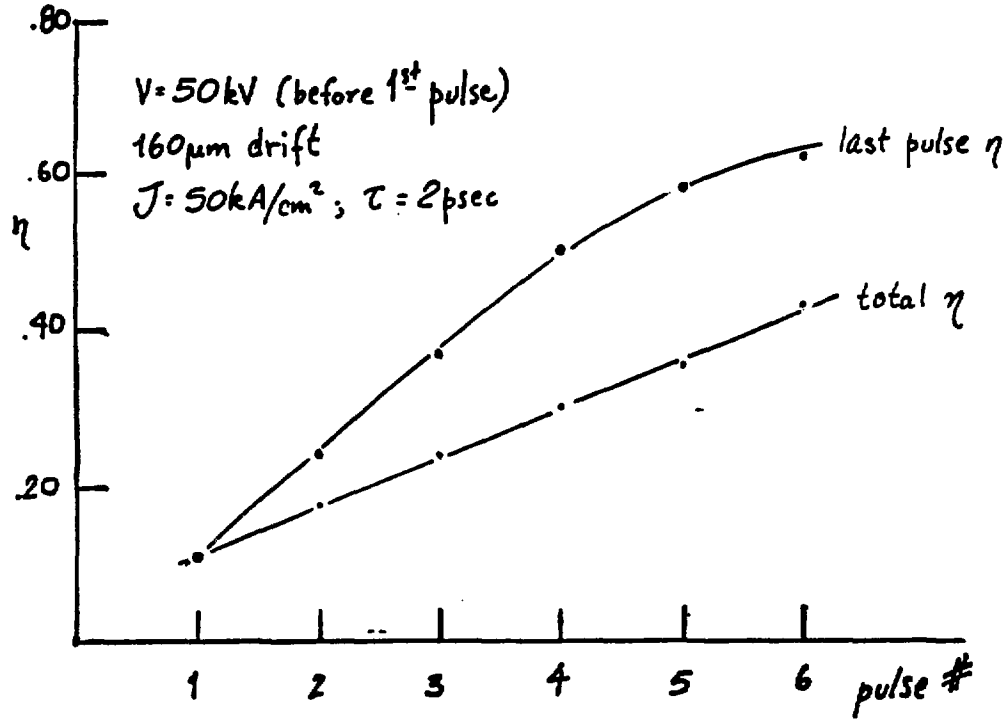

Fig. 5. Coupling efficiency vs. pulse number for multi-pulse discharge.

IV. EXPERIMENTAL STUDY OF THE SWITCH

The SPL makes severe demands on the laser/photodiode system. A good photocathode efficiency (>1%) is required to keep the laser power within reason. High current densities must be produced (about 100kA/cm^2 during the 2ps laser pulse) to give large accelerating fields. The photocathode must be able to hold 50-100kV for about 1ns and should be "rugged" if possible to avoid keeping the entire structure continuously under high vacuum. These requirements may not be mutually compatible. Much experimental work is needed to clarify the situation.

Some studies of photo-emission with very short laser pulses have been done.[7] A program is now getting under way at BNL to carry these studies further. The first series of experiments are being carried out with the apparatus pictured schematically in Figure 6. High electric fields at the photocathode surface are achieved by using a small diameter wire. The wire is gold-plated tungsten for the initial tests, but other metallic photo-emitters can easily be tried. Voltages up to 5kV DC have been used, giving fields up to 0.5MV/cm. The first attempts to see laser-induced emission have been with a nitrogen laser (337nm) producing pulses of a few mJ in 10ns. Figure 7 shows the output in terms of current density versus time for two different values of photon intensity. These preliminary results give qualitative evidence for a threshhold below which the output follows the light pulse shape and above which the emission process continues for a long time after the pulse. For intensities below this threshhold the current density is roughly proportional to surface field, as shown in Figure 8.

In order to fit the requirements of SPL, significantly higher current densities must be achieved in shorter times. The present effort of the BNL group is directed toward the substitution of a frequency-quadrupled YAG laser (266nm) capable of producing 30ps pulses of about 1mJ. Subsequently a pulse compression scheme will be used to get down to 1-2ps pulse widths.

A different apparatus is also being designed to allow studies with extended photo-cathode surfaces. In addition, pulsed HV will be used in order to extend the studies to surface fields of about 3MV/cm. Short HV pulses will be applied by means of a switch which is triggered by the laser pulses to synchronize them with the illumination of the photo-cathode.

The question of pulsed HV will also be studied at CERN in a special apparatus under construction. The expectation that very high overvoltages can be held for short times is based on previous work[8] using very small electrodes. Electric fields of order 30MV/cm were held for about 1ns. Although rather smaller fields are foreseen for SPL, tests with more realistic (i.e., extended) geometries are needed. The CERN tests will employ a triggered blumlein line of cylindrical geometry terminated with a structure closely resembling the circular photocathode between two disks found in SPL.

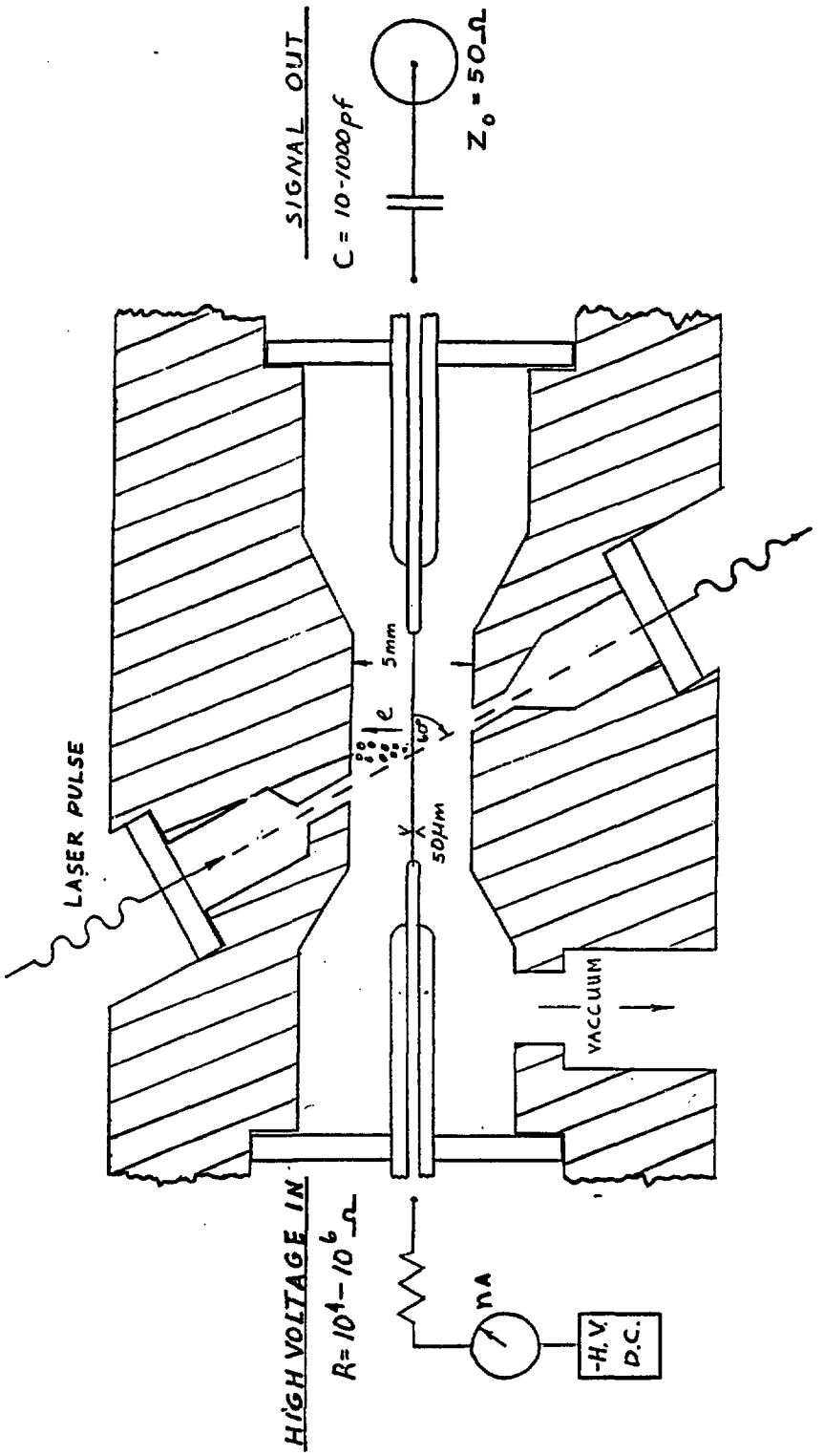

Fig. 6. Schematic view of the single-wire photoemission apparatus in use at BNL.

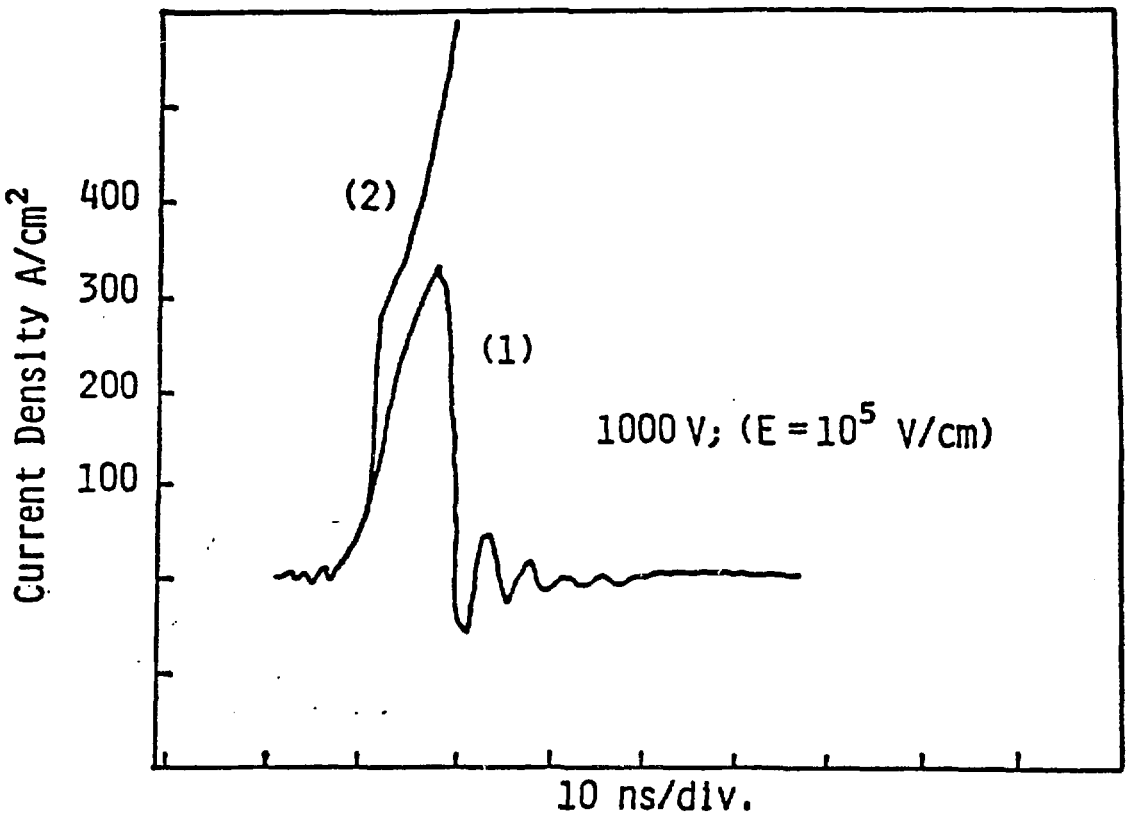

Fig. 7. Waveforms observed at fixed bias for two different values of photon flux, curve (2) corresponding to the higher flux.

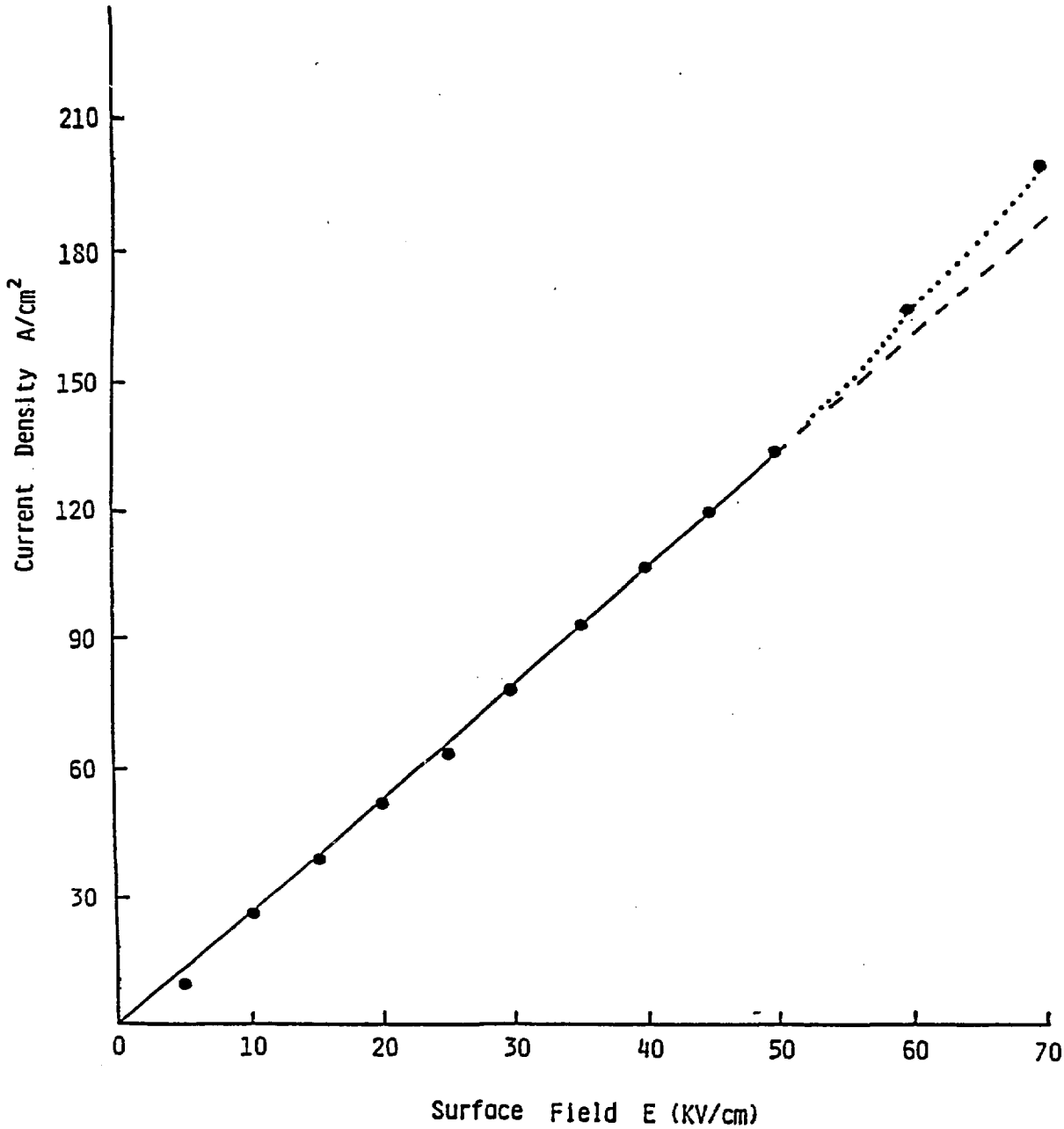

Fig. 8. Measured current density vs. surface field for photon flux low enough to avoid breakdown.

V. RF MODELLING OF THE SPL ACCELERATING STRUCTURE

Ideal radial transformers have been studied analytically and numerically[9-10] as elements of switched power or wakefield accelerators. The amplification of electric fields propagating inward to the center of a radial line with outer radius R and gap g is given by[9]

$$\varepsilon = 2\sqrt{\frac{2R}{g + c\tau_r}} \tag{5}$$

where τ_r is the risetime of the field pulse.

One would like to study the transformer ratio ε as a function of the radius and the risetime, especially in the presence of a central hole in the disks. Just as important for SPL (and harder to calculate) are the effects of imperfections in the accelerating structure. Examples are:

- Relative misplacement of the hole, edge, and photocathode.
- Non-uniform illumination of or emission from the photocathode.
- Jitter in the timing of pulse production.

Of particular importance is the effect of imperfections on the generation of extraneous (i.e., non-accelerating) field components. Multi-pulse operation of SPL, mentioned in section II, requires refiring the photocathode to add to the reflected pulse; the properties of the reflected pulse are therefore also important to measure.

A full-scale model of the SPL structure is hard to study because of its small size and large bandwidth. In order to measure the fields in such a structure one would need sub-millimeter probes and many-GHz instrumentation. For these reasons a 10:1 model has been built at CERN and is under study at present.[11] The model is sketched in Figure 9. The model is fed at 64 equi-spaced points around the periphery by a single pulser driving a network of high bandwidth splitters.[11] The model is instrumented with capacitive probes that measure the main component of the electric field at the center and at several points along a diameter of the disk. A Hewlett-Packard 8510 network analyzer is used to measure the complex transmission coefficient of the model at a number of frequencies and to synthesize the pulse-response of the structure.

Initial tests with the model have sought to verify the radius- and risetime-dependence of the gain. Figure 10 shows that the results of reference 9 are qualitatively confirmed. Preliminary studies of the effects of asymmetries and of the nature of the reflected pulse have been carried out (see Fig. 11), but require further investigation. Future measurements will also include studies of the radial enhancement with fewer inputs, and the use of magnetic probes to measure deflecting fields in the gap.

VI. SUMMARY AND OUTLOOK

A number of the important experimental questions concerning the feasibility of SPL are presently under study. The coupling

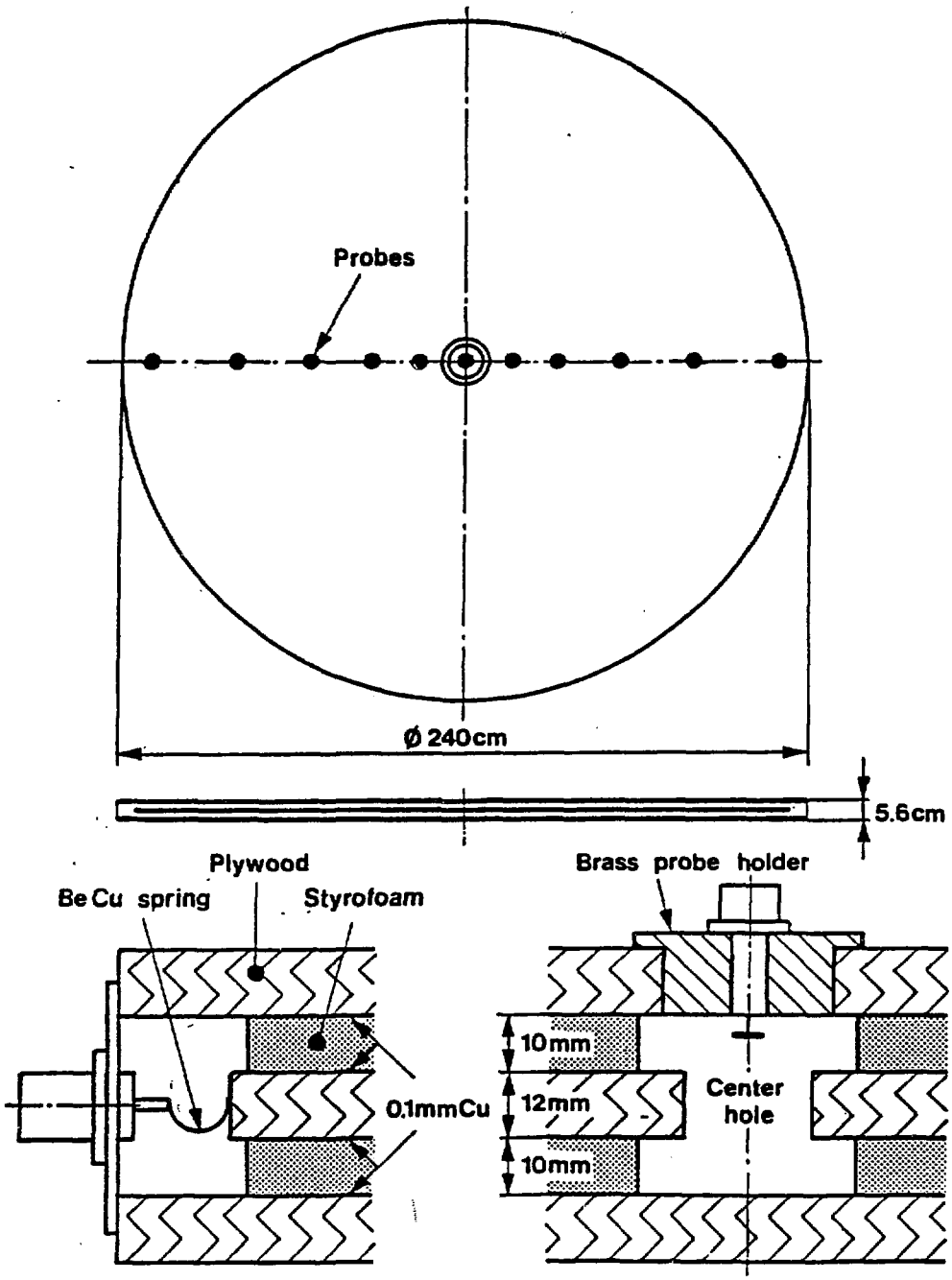

Fig. 9. Sketch of the 10:1 scale RF model of the radial line built and operated at CERN.

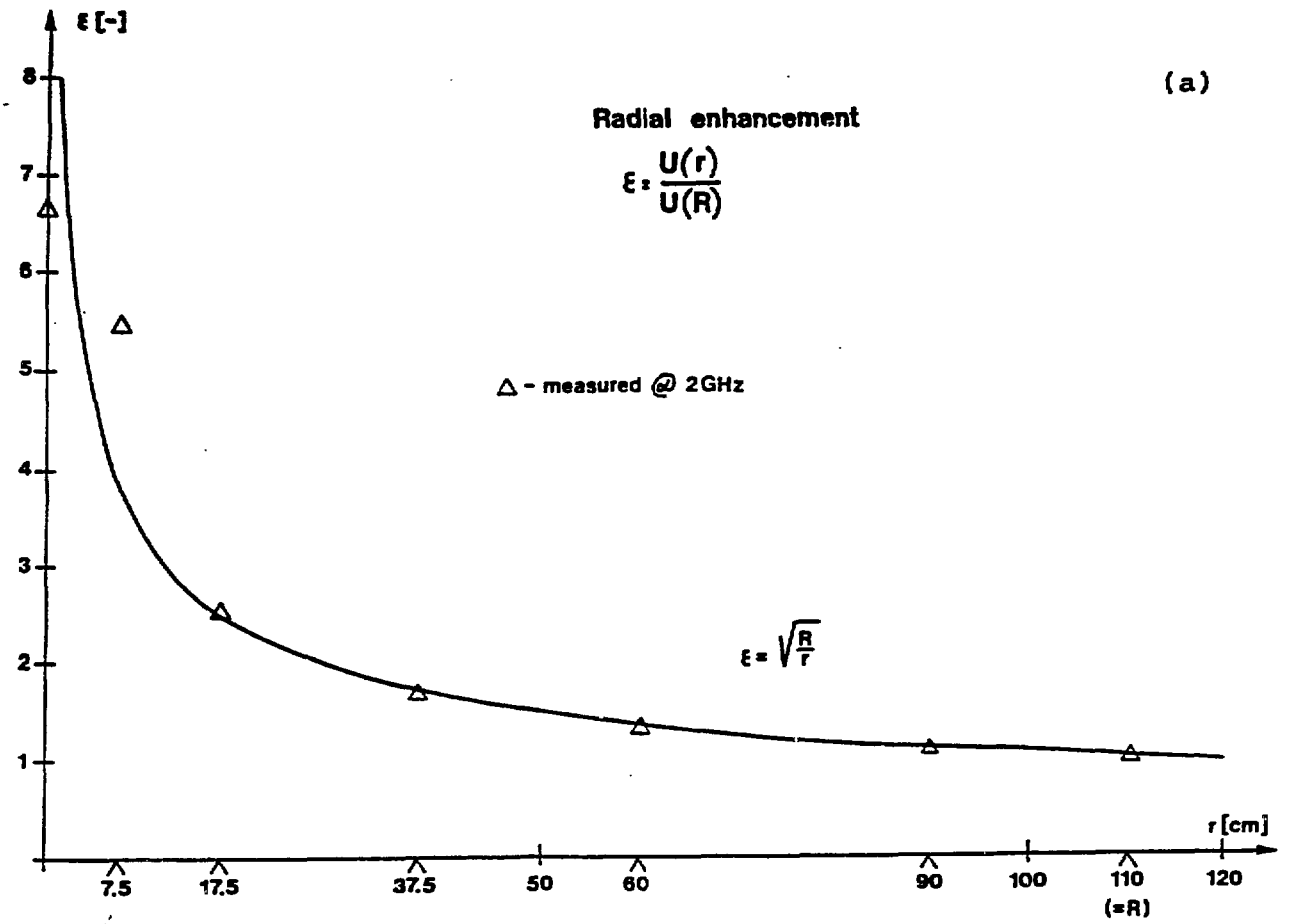

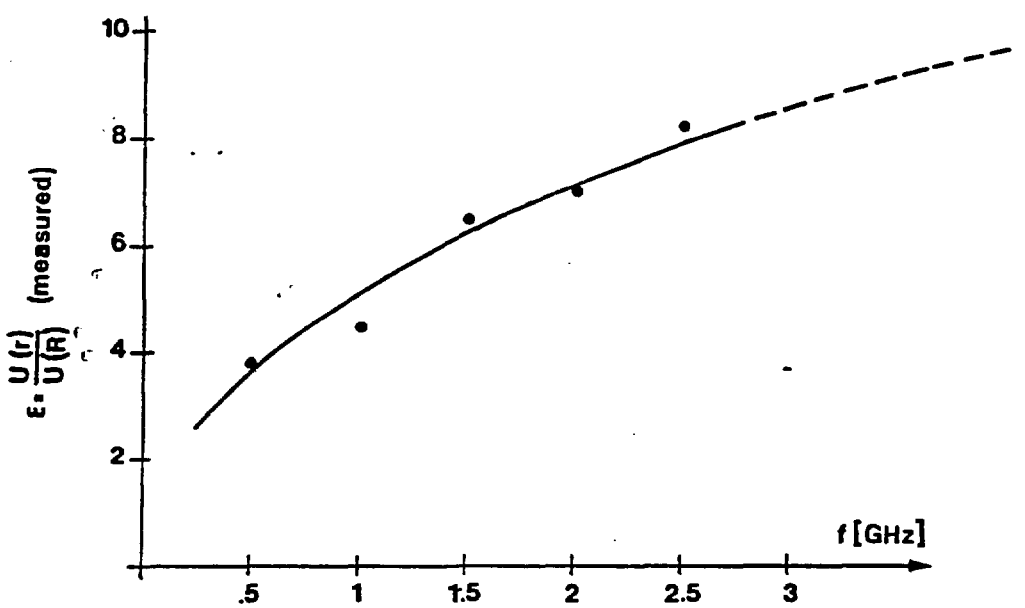

Fig. 10. Measured radial enhancement, compared to Eq. (5): a) as a function of radius at fixed frequency, b) as a function of frequency (or risetime) at fixed radius.

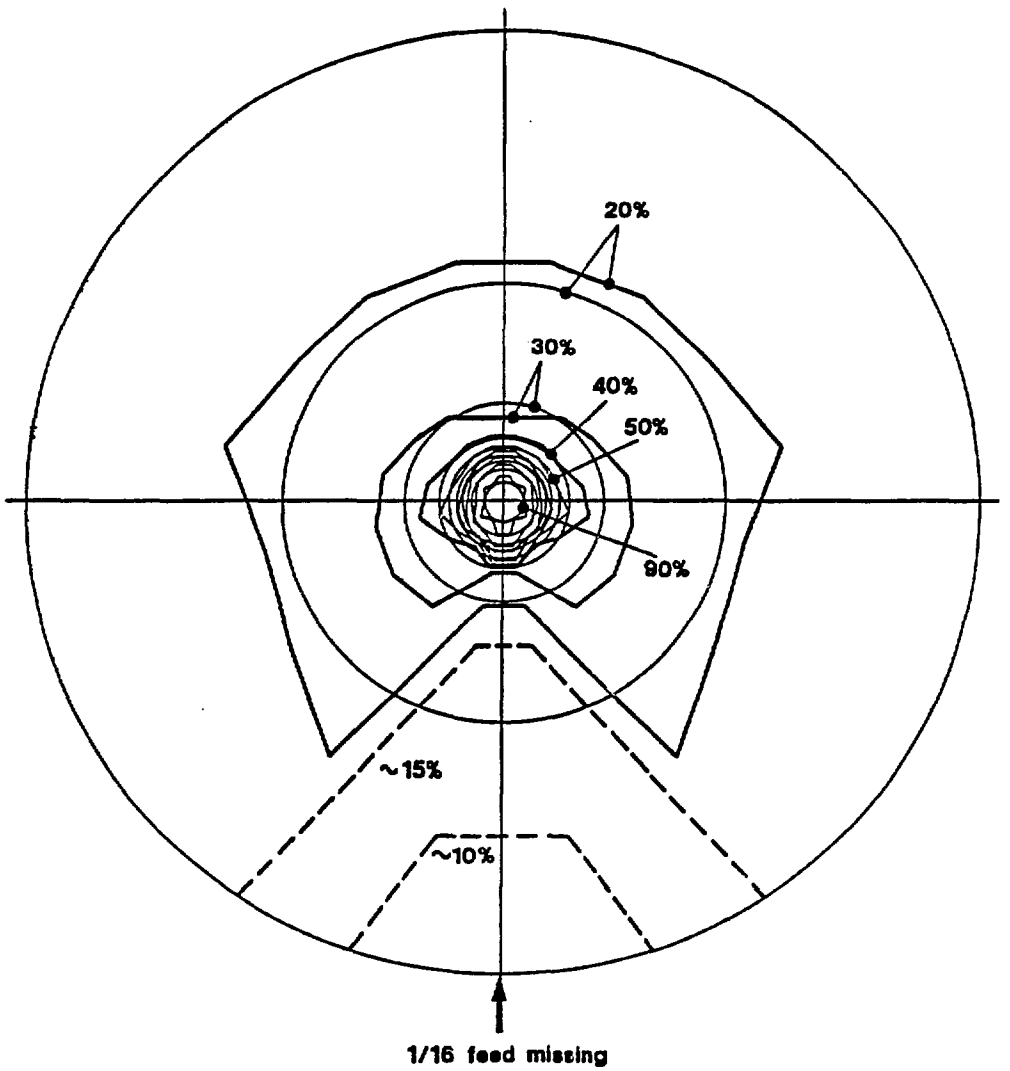

Fig. 11. Measured distribution of field for a case with azimuthal asymmetry (4 adjacent inputs disconnected). Circles represent contours of equal field for the ideal symmetric case; polygons are the measured equal-field contours in the asymmetric case.

efficiency of the switch to the structure appears to be acceptable (especially with multi-pulse operation) on the basis of simulations. Laser-induced photo-emission with very short pulses is under active study, but the utility of a vacuum photo-diode as the SPL switch has yet to be demonstrated. On the order of a year or more of work is needed for this. The HV breakdown problems are about to begin receiving attention. RF modelling of the radial line will soon be able to address the question of the importance of non-uniformities and asymmetries in SPL.

If the results of ongoing work indicate that SPL is still a possible means of achieving high gradient acceleration, one can move on to defining the parameters of a real accelerator and coming to grips with the hard technical problems associated with its implementation.

ACKNOWLEDGMENTS

The work reported in this paper is being done by, or in collaboration with, the following people: F. Caspers, H. Haseroth, J. Knott and W. Willis at CERN; J. Fischer, R. Palmer, T. Srinivasan-Rao and I. Stumer at BNL.

REFERENCES

1. See, for example E.C. Hartwig in Symposium on Electron Ring Accelerators, UCRL-18103, p. 44, 1968.
2. W. Willis, in Laser Acceleration of Particles, AIP Conf. Proc. No. 130, p. 421, 1985.
3. G. Morou, W.H. Knox and S. Williamson, "High-Power Picosecond Switching in Bulk Semiconductors", in PICOSECOND OPTOELECTRICAL DEVICES (Academic Press, 1984) p. 219.
4. F. Villa, SLAC-Pub-3875, 1986.
5. A. Palevsky and A. Drobot, "Application of E.M. PIC Codes to Microwave Devices", Proc. of 9th Conf. on Numerical Simulation of Plasmas (Northwestern University, 1980).
6. I. Stumer, presentation to the CLIC Committee, CERN, 1986.
7. H. Bergeret, M. Boussoukaya, R. Chehab, B. Leblond, LAL/RT/85-10, Orsay, 1985.
8. B. Jüttner, W. Rohrbeck, H. Wolf, Berträge Plasma Physik 10, p. 383 (1970).
9. R.E. Cassell, F. Villa, SLAC-Pub-3804, 1985.
10. M.E. Jones, "Analysis and Simulation of Short Pulses on a Radial Transmission Line", Los Alamos 1985, to be published in Particle Accelerators.
11. S. Aronson, F. Caspers, H. Haseroth, J. Knott, PS/LI/Note 86-8, CERN 1986.