FED/VU 86C-230

By acceptance of this article, the publisher or recipient acknowledges the U.S. Government's right to retain a nonexclusive, royalty-free license in and to any copyright covering the article.

CONF-860917--12-Vugraphs

C. A. Flanagan
Fusion Engineering Design Center
for
CIT National Design Team

THE COMPACT IGNITION TOKAMAK
An Overview

CONF-860917--12-Vugraphs

DE87 001686

presented at
14th Symposium of Fusion Technology
Avignon, France
September 8-12, 1986

FUSION ENGINEERING DESIGN CENTER

*Research sponsored by the Office of Fusion Energy, U.S. Department of Energy, under contract DE-AC05-84OR21400 with Martin Marietta Energy Systems, Incorporated.

DISTRIBUTION OF THIS DOCUMENT IS UNLIMITED

MASTER

Background

FUSION ENGINEERING DESIGN CENTER

- **Ignition** and **plasma burn** key objectives of recent US designs (FED, INTOR, TFCX)
  - Early designs were ambitious, large (4-5 m), costly (>1 B$)
  - Objectives included: ignition, long pulse (100-500 s), and engineering technology development
- **Compact tokamak studies** (1.1-1.5 m) started in 1985
  - Objectives included: ignition, short burn pulse (3-5 s)
  - Capital cost (<500 M$)
  - Studies included:
    - FEDC ignitor - FEDC design team
    - Ignitor - European design team
    - LITE - MIT design team
    - ISP - PPPL design team

Background (continued)

FUSION ENGINEERING DESIGN CENTER

- An **international panel** in mid-1985 concluded
  - Compact devices of this class appeared feasible
  - Further study was warranted

- A **national design team** was formed in early 1986
  - A baseline design point was established
  - A conceptual design was begun and continues

National CIT Design Team

FUSION ENGINEERING DESIGN CENTER

Institution	Responsibility
Princeton Plasma Physics Laboratory	Project management, design physics, TF coils, diagnostics, electrical, cooling, vacuum, facilities
Massachussetts Institute of Technology	Engineering manager, project physics, PF coils, special studies
Fusion Engineering Design Center	Systems engineering, design integration, shielding, structure, ex-vessel RM, costing
GA Technologies	Divertor, first wall, vacuum vessel, in-vessel RM
Oak Ridge National Laboratory	ICRH, pellet fueling
Los Alamos National Laboratory	Tritium systems
Lawrence Livermore National Laboratory	Instrumentation and control
Idaho National Engineering Laboratory	Safety, environment

Mission and Physics of CIT

FUSION ENGINEERING DESIGN CENTER

- **The mission of CIT is:** to realize, study and optimize fully ignited plasma discharges

- **The physics requirements** have been established to provide reasonable assurance that the mission will be achieved
  - Plasma confinement guidelines consider all present scaling laws; ohmic, auxiliary heated L-mode, and H-mode
  - Burn pulse duration set at ten times τ_E; an additional two times τ_E provided to heat to ignition
  - Capability provided to operate both in divertor and limiter mode

CIT Distinguishing Features

FUSION ENGINEERING DESIGN CENTER

- **External frame/hydraulic press** provides preload on TF coil inner leg
- **Wedging** of TF coil inner legs reacts centering loads; no bucking of TF/OH
- **Explosively bonded laminated Inconel-Copper** used in TF and OH conductors
- An **average stress criterion** is used; average stress is allowed to approach 0.85 of yield of laminate
- **Coil cases** used on TF outer legs; provide support for out-of-plane loads
- **Major PF coils** are located **external** to TF coils; small trim coils are located internal to TF coil bore

Key Parameters of CIT

FUSION ENGINEERING DESIGN CENTER

Parameter	Value	
	Divertor	Limiter
Major radius, m	1.34	1.32
Minor plasma radius, m	0.41	0.43
Elongation	2.4	2.0
Plasma current, MA	9.0	10.0
Field-on-axis, T	10.3	10.4
Neutron wall loading at 300 MW power, MW/m^2	6.2	
ICRH power, MW	12	
TF flat top time, s	4.2	
Plasma burn time, s	3.6	
Plasma current ramp time, s	5.8	
Pulses, number, full field	3000	
70% field	50000	

DEVICE CORE ELEVATION VIEW

FUSION ENGINEERING DESIGN CENTER

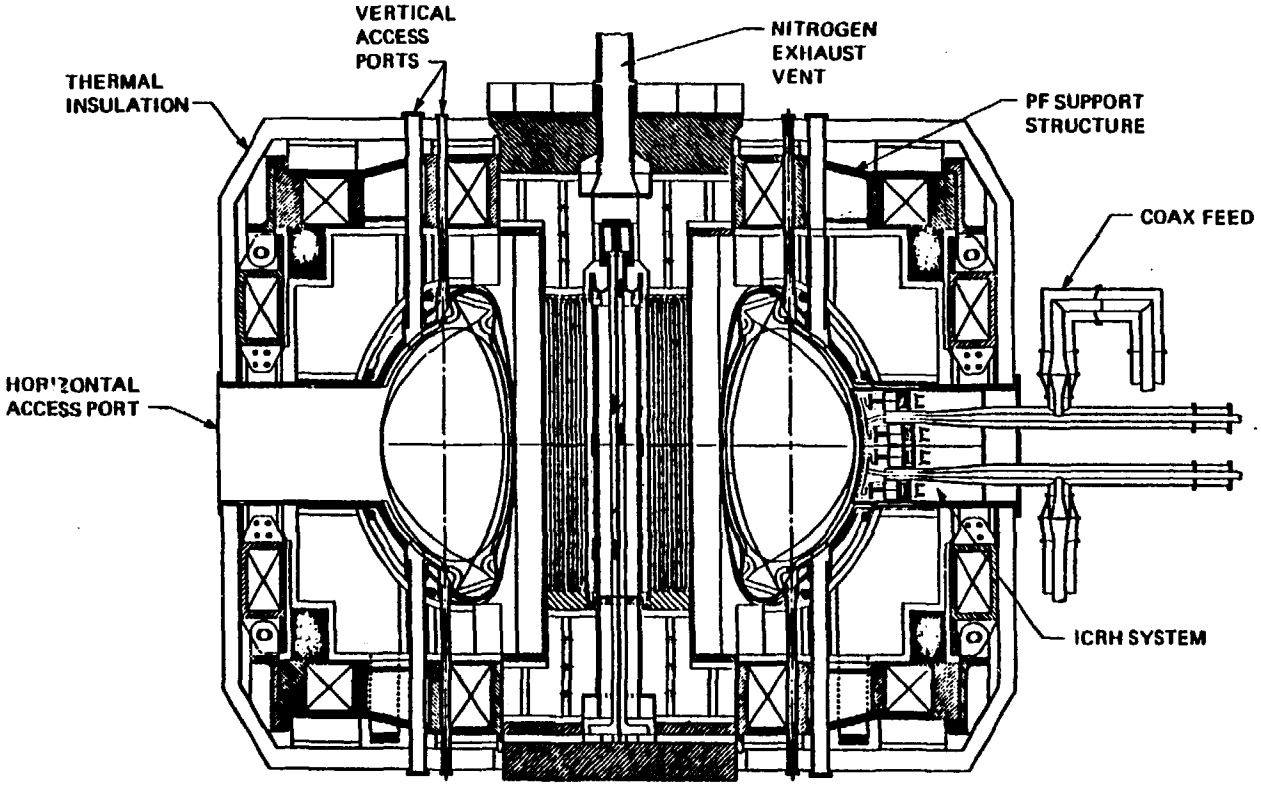

FUSION ENGINEERING DESIGN CENTER

ELEVATION VIEW OF CIT

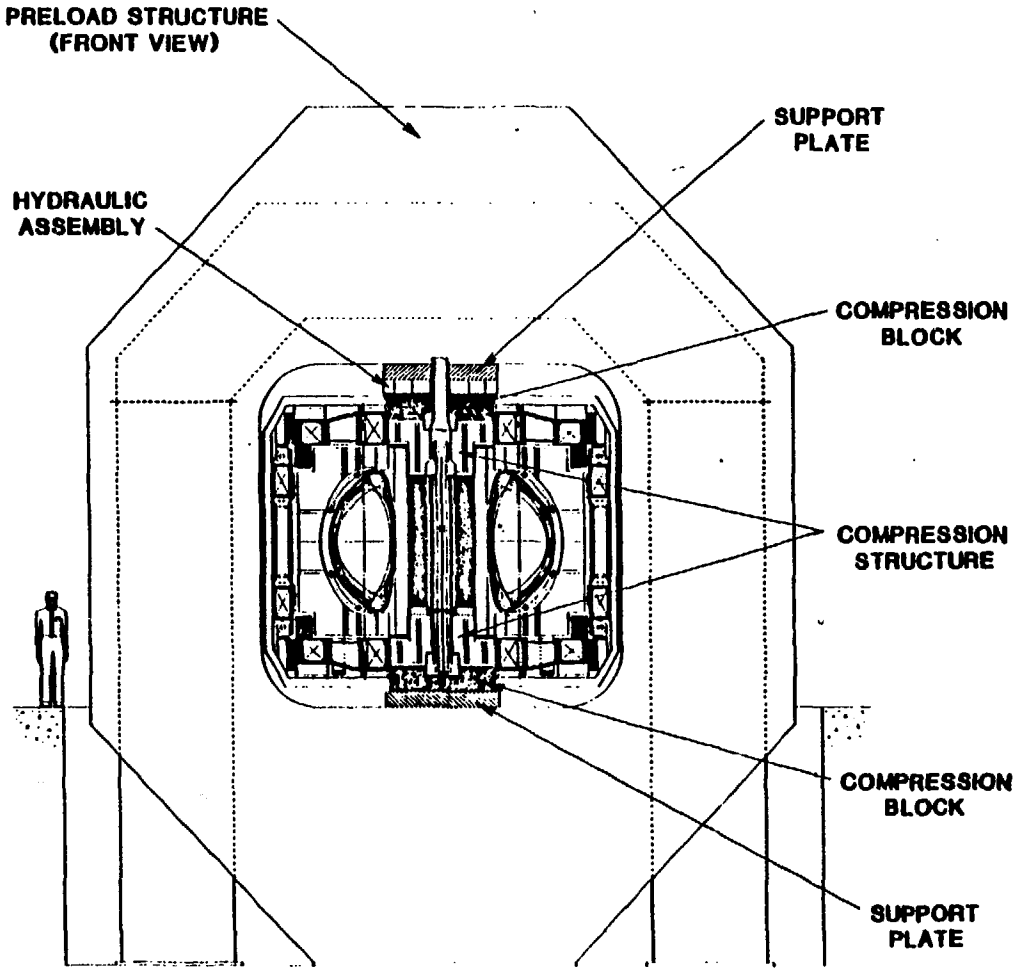

TF COIL SINGLE TURN OF CONDUCTOR

FUSION ENGINEERING DESIGN CENTER

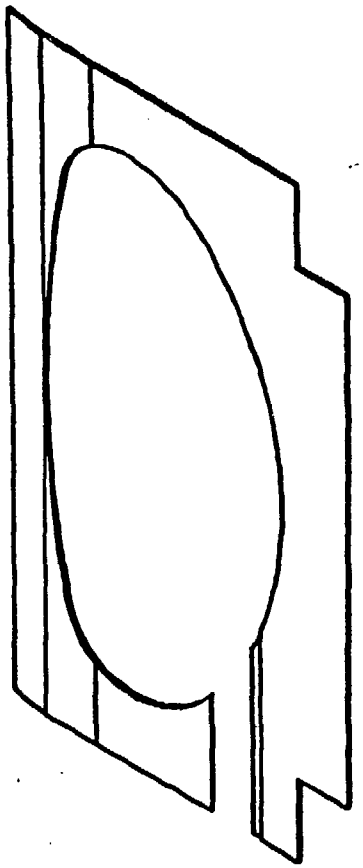

TF COIL AND CASE ASSEMBLY

FUSION ENGINEERING DESIGN CENTER

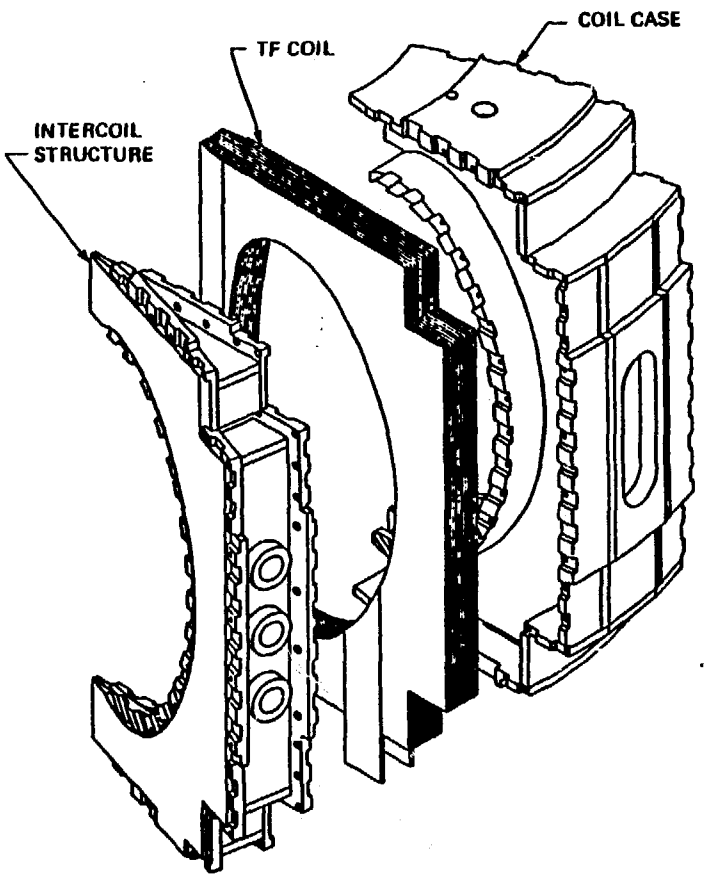

VACUUM VESSEL ASSEMBLY

FUSION ENGINEERING DESIGN CENTER

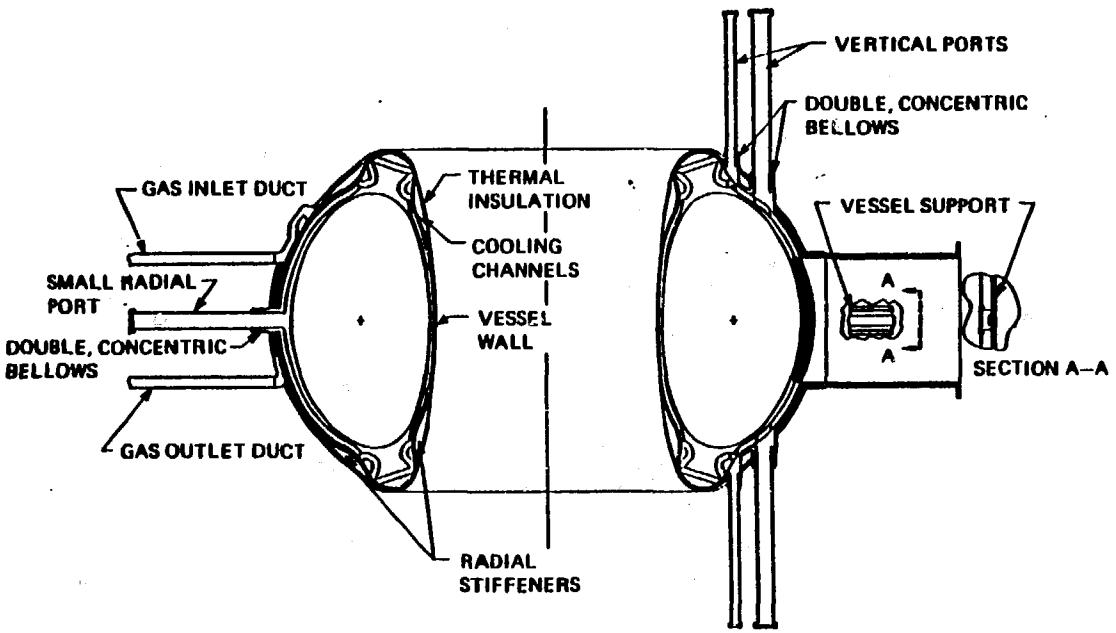

FIRST WALL CONFIGURATION

FUSION ENGINEERING DESIGN CENTER

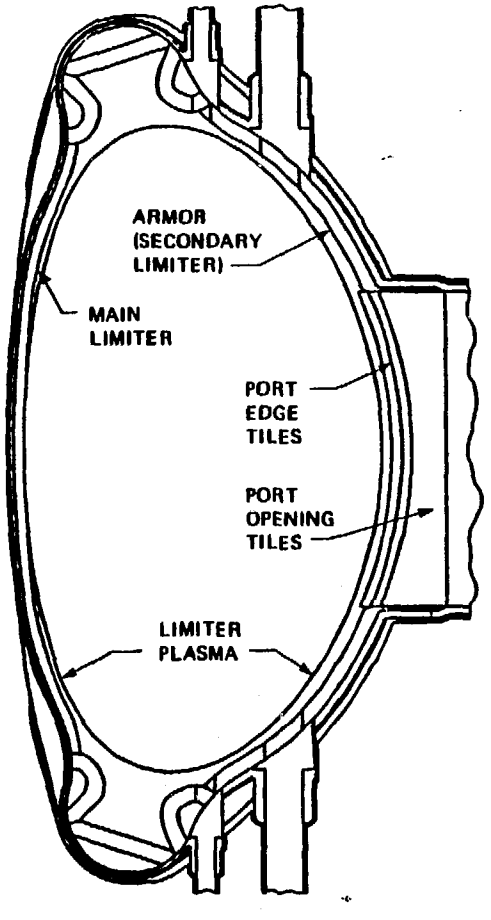

FIRST WALL TILE ARRANGEMENT

FUSION ENGINEERING DESIGN CENTER

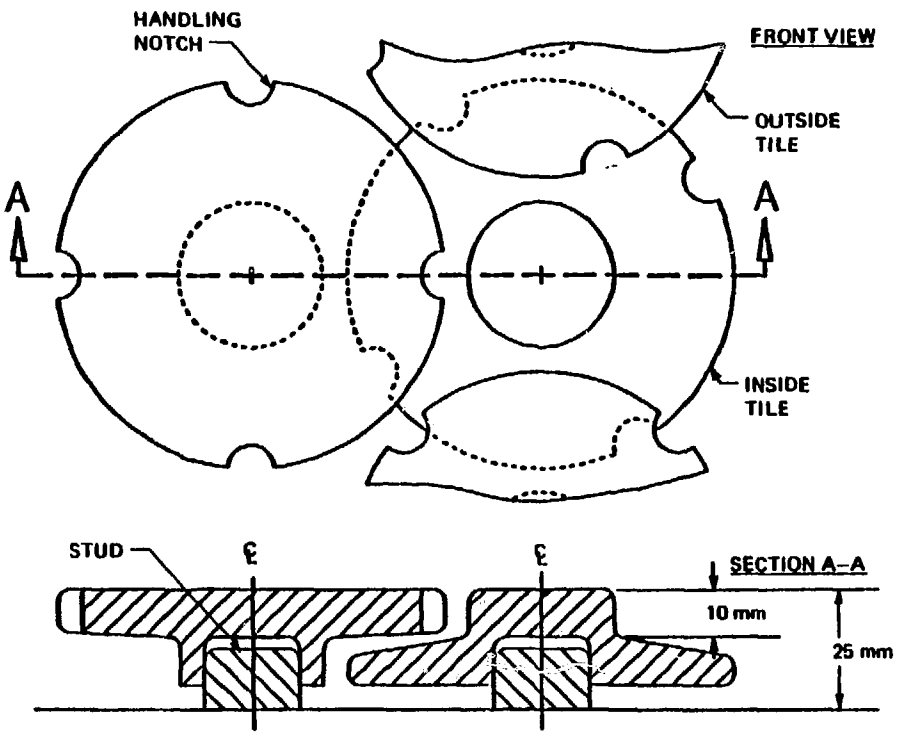

CIT ICRH ANTENNA MECHANICAL DESIGN

FUSION ENGINEERING DESIGN CENTER

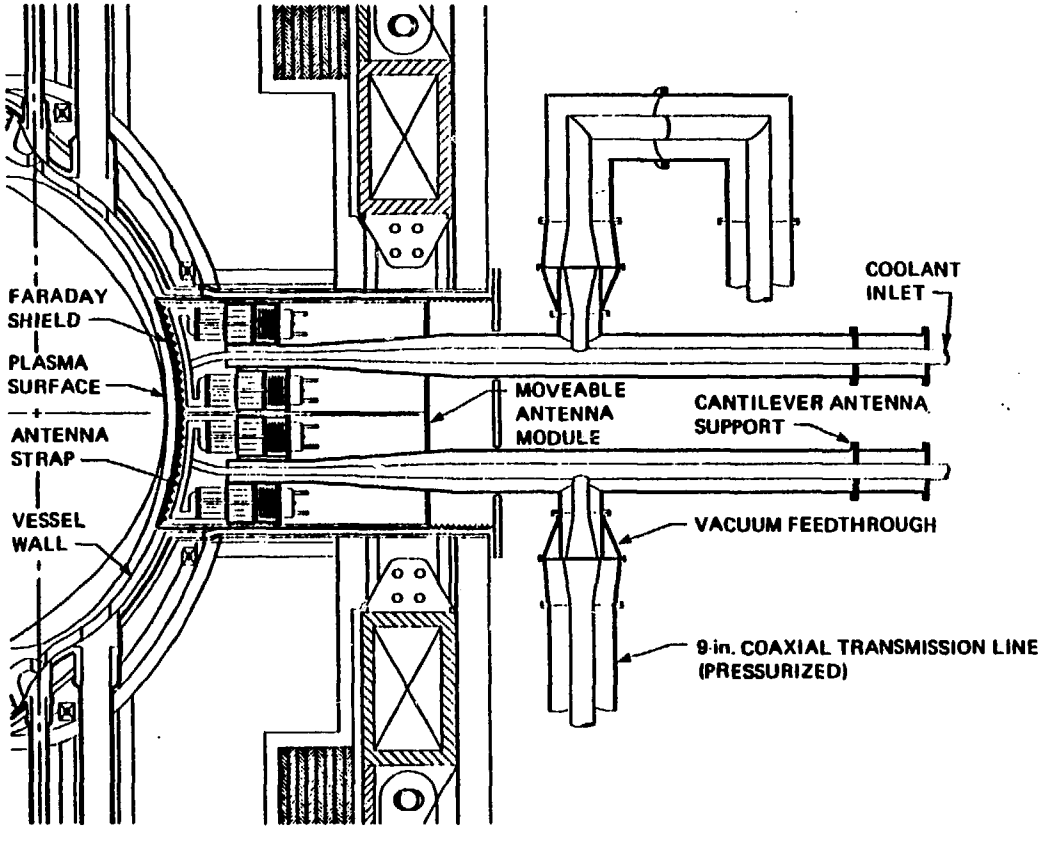

Maintenance Philosophy

FUSION ENGINEERING DESIGN CENTER

- Provide "hands-on" capability within the test cell
  - Prior to D-T operation: "hands-on" capability outside vessel; remote capability may be required for in-vessel operations because of port size limitations
  - After D-T operations commence: remote capability required for in-vessel operations; personnel access permitted within test cell one day after shutdown

- Planned maintenance
  - All components inside vessel
  - Auxiliary equipment external to device
  - None planned for lifetime designed components such as vessel, magnets

CIT IN-VESSEL ARTICULATED ARM

FUSION ENGINEERING DESIGN CENTER

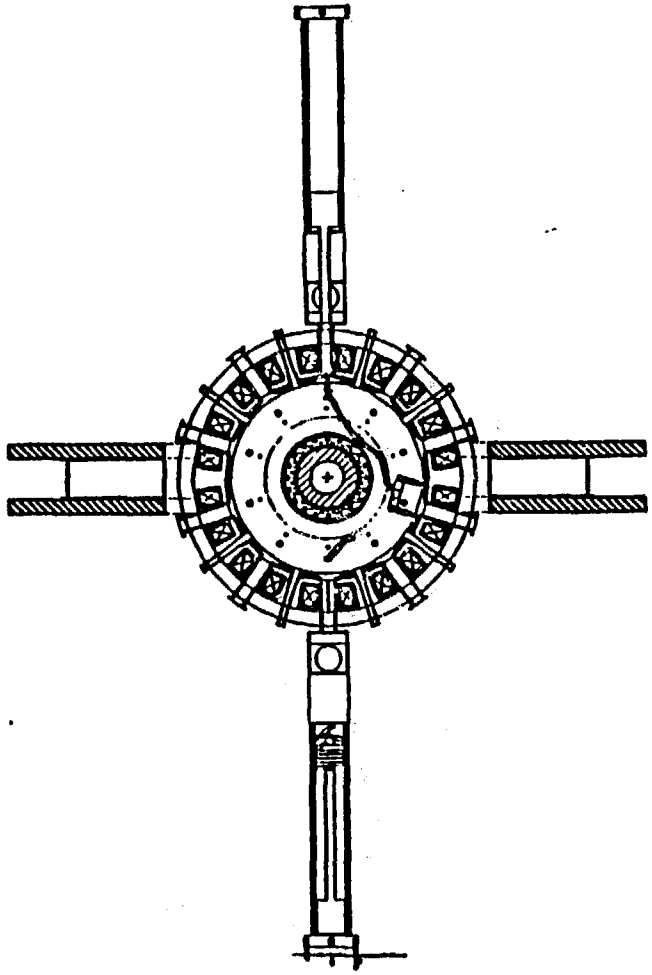

CIT AIR-LOCK STORAGE FOR IN-VESSEL ARTICULATED ARM

FUSION ENGINEERING DESIGN CENTER

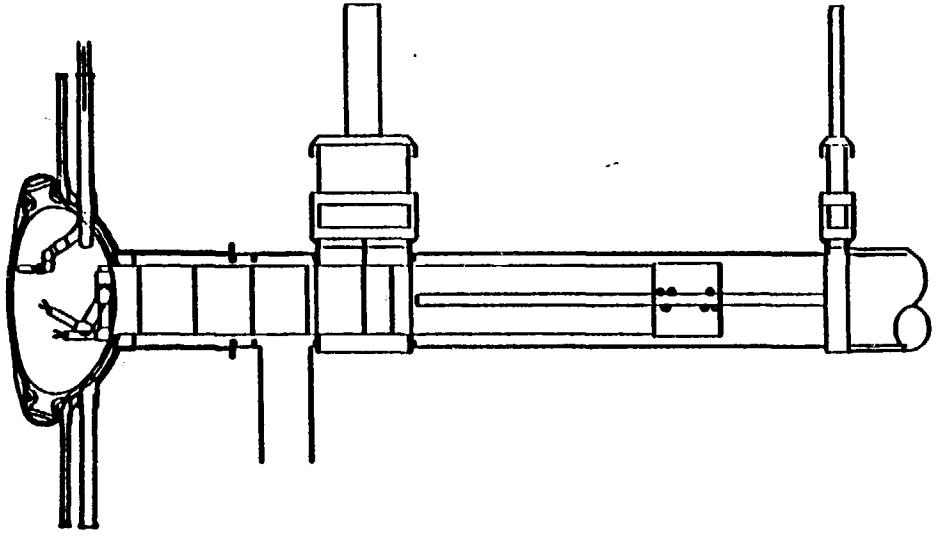

CIT SUPPORT BUILDING CUTAWAY VIEW

FUSION ENGINEERING DESIGN CENTER

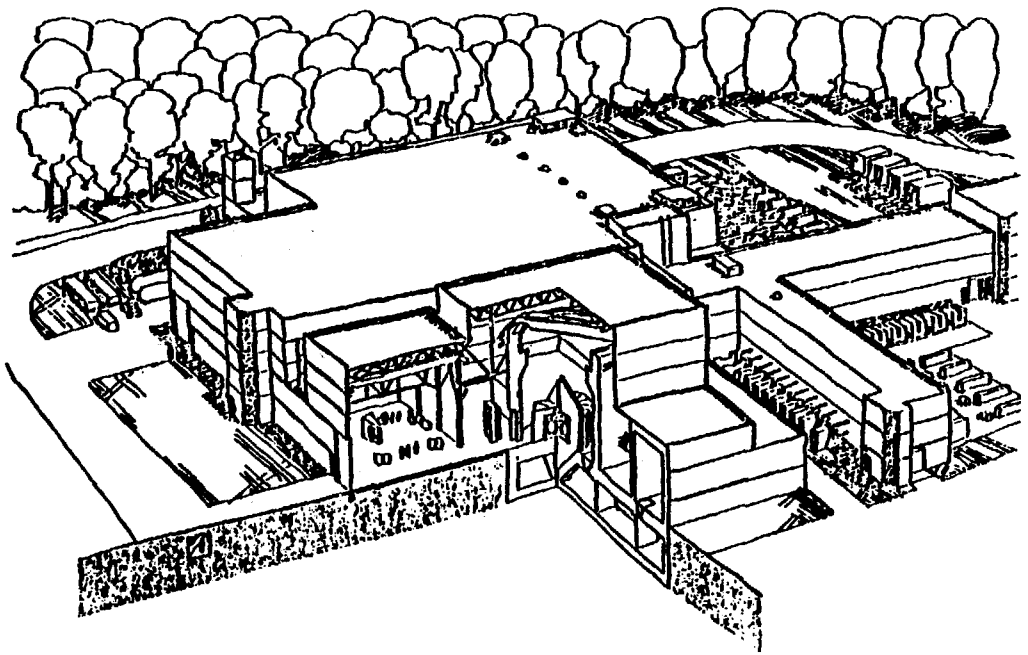

Schedule

FUSION ENGINEERING DESIGN CENTER

- FY 1987 – Complete conceptual design
- FY 1988 – Initiate detailed design and component fabrication
- FY 1992 – Complete device installation
- FY 1993 – First plasma, early in year

DISCLAIMER

This report was prepared as an account of work sponsored by an agency of the United States Government. Neither the United States Government nor any agency thereof, nor any of their employees, makes any warranty, express or implied, or assumes any legal liability or responsibility for the accuracy, completeness, or usefulness of any information, apparatus, product, or process disclosed, or represents that its use would not infringe privately owned rights. Reference herein to any specific commercial product, process, or service by trade name, trademark, manufacturer, or otherwise does not necessarily constitute or imply its endorsement, recommendation, or favoring by the United States Government or any agency thereof. The views and opinions of authors expressed herein do not necessarily state or reflect those of the United States Government or any agency thereof.