covering the article.

By acceptance of this article, the publisher or recipient acknowledges the U.S. Government's right to retain a nonexclusive, royalty-free license in and to any copyright covering the article.

DISCLAIMER

CONF-801011--44

FIRST WALL-SHIELD DESIGN CONSIDERATIONS FOR ETF*

P. H. Sager, General Atomic Company
G. M. Fuller, McDonnell Douglas Astronautics Company
ETF Design Center
Oak Ridge National Laboratory
Oak Ridge, Tennessee

B. A. Engholm
General Atomic Company
San Diego, California

MASTER

Summary

ETF reactor designs have been developed for both the bundle divertor (Design 1) and single-null poloidal divertor (Design 2) impurity control concepts. The first wall-shield designs presented for these two reactors are basically the same. Access for repair and replacement is provided by dividing the torus into ten sectors that can be radially removed between adjacent toroidal field (TF) coils. Stainless steel, cooled by borated water, forms the basic structure of these sectors. Water-cooled tube panels, radiation-cooled graphite disruption armor, and water-cooled graphite runaway electron armor are attached to the inside walls of these sectors to form the plasma chamber. The torus sectors are mounted to and form a vacuum seal with a torus support spool.

1. Introduction

Impurity control is a major concern in the development of the fusion Engineering Test Facility (ETF). Two concepts to divert and collect helium ash and other impurities are under consideration: a bundle divertor and a poloidal divertor. Since the viability of neither of these concepts is yet established, two reactor designs (one for each divertor concept) are being developed.

While many of the major design parameters are the same for both reactors, some of the parameters and features are dictated by the divertor design. For example, the clear horizontal bore dimension of the TF coil is about 1 m smaller for the machine with the bundle divertor (Design 1) than it is for the machine with the poloidal divertor (Design 2). The larger bore is required to provide clearance for removal of the torus sectors that include a divertor collector chamber for the single-null divertor. Also, to provide equal clearance dimensions for the torus sectors, the plasma chamber axis must be placed 0.5 m above the machine midplane.

The first wall-shield assembly serves several basic functions. It provides an evacuated plasma chamber in which the plasma can be developed and maintained. It also protects the superconducting TF coils, the other reactor components, and the rest of the facility from the fast neutron flux emanating from the fusion processes within the plasma. In addition, the first wall components protect the bulk shield from the surface thermal and particle load conditions encountered at the plasma edge.

Several concepts for the vacuum boundary, including the incorporation of an evacuated reactor building, have been suggested.[1] Early in the ETF program, these proposals were evaluated and a hard seal at the shield boundary was adopted. This approach minimizes the potential for tritium contamination of the reactor building and still permits disassembly of the torus from the outside of the bulk shield.

Another early decision affecting the design of the torus was the maintenance philosophy. Experience with fusion experimental devices and other test reactors indicates that many of the maintenance tasks involve minor repairs and adjustments to diagnostics, electrical connections, and service lines outside the reactor itself. In addition, many of the failures occur in unpredicted modes requiring *ad hoc* procedures. Accordingly, it was concluded that provisions should be made for manned access to the reactor building 24 hours after shutdown.

2. Design Requirements and Loading Conditions

The fundamental requirement for the torus assembly is to provide a high vacuum and an impurity-free environment for ignition and

*Research sponsored by the Office of Fusion Energy, U.S. Department of Energy, under contract W-7405-eng-26 with the Union Carbide Corporation.

DISTRIBUTION OF THIS DOCUMENT IS UNLIMITED

maintenance of a burning plasma. This implies that the plasma chamber must be vacuum-tight and provided with a system for pumping down the chamber between burns. A related requirement is that the surface area isolated by low conductance passages should be minimized so that virtual leaks do not become a problem. The high vacuum requirement also implies that provisions must be made for bakeout and conditioning to remove surface impurities prior to operation and that the structural materials used must be those that will not degrade the plasma when sputtered off the surface by charged particles and charge exchange neutrals (i.e., low-Z materials).

The shielding requirements are related to the maintenance philosophy. Since many of the maintenance operations involve components and systems outside the bulk shield and can be performed more quickly using contact procedures, the shielding requirements have been established to permit personnel access to the reactor building 24 hours after shutdown. This involves providing sufficient shielding to limit the activation of the structures and equipment outside the shield and of the shield itself, so that the maximum exposure to personnel working around the reactor is 2 mrem/h. Additional criteria have been established as 10 mrem/h to extremities and 100 mrem/h for highly localized streaming.[2]

Since it is not considered essential to provide manned access to the poloidal bore of the machine, different criteria can be applied to the shielding for the inboard area of the plasma chamber. The main concern here is the exposure to the TF coils. Three limits have been established: 10^9 rad for the exposure of electrical insulation in the coils, 2.5×10^{-4} dpa for the copper stabilizer in the superconducting coil, and 5 mW/cm^3 for the permissible nuclear heating rate. These limits should be considered tentative and subject to adjustment as more experimental data are developed and more trade-off studies are carried out.

The normal loading conditions are based on predictions of plasma characteristics, as given in Table 1. With a total fusion power of 750 MW, the neutron wall loading is 1.5 MW/m^2. The full power pulse is 100 s, which for a full cycle of 135 s provides a duty factor of 0.74. Due to differences in the effectiveness of the two divertor systems, the particle flux is somewhat higher for Design 1 than it is for Design 2, resulting in a higher surface heat flux.

The plasma chamber must also accept a number of plasma disruptions due to anomalous plasma behavior and equipment failures. At best, the estimate of one disruption per 1000 burns is an educated guess. It is predicted that these will impact on the inboard, top, or bottom wall over a period of 20 ms, but the time period could be much longer. The area affected — 10% — is, again, an educated guess, as is the related peaking factor.

Table 1. First wall-shield loading conditions

Normal conditions	
Power	1.5 MW/m^2
Burn time	100 s
Cycle time	135 s
Startup/shutdown time	12/10 s[a]
Availability target	25%
Lifetime pulses	5×10^5
Peak surface heat flux	17.1/15.6 W/cm^2[a]
Total particle flux	$2.7 \times 10^{16}/1.8 \times 10^{16}$ cm^{-2}s^{-1}[a]
Particle energy	1000 eV
Disruptions	
Frequency	10^{-3}
Thermal energy deposited	200 MJ
Time	20 ms
Area of deposition	10%
Peaking factor	1

[a]Design 1/Design 2.

3. Design Description

3.1 Design 1

The overall design of the reactor with a bundle divertor is illustrated in Fig. 1. The major design parameters are listed in Table 2.

The torus assembly is composed of a support spool into which are inserted ten shield sectors, a water-cooled outboard first wall, disruption armor on the inboard, top, and bottom walls of the plasma chamber, and runaway electron armor in target areas of the upper and lower facets of the outboard wall, as shown in Fig. 2.

The shield is fabricated as a stainless steel box structure into which stainless steel rods and tubes are packed to achieve an optimum gradation of iron and borated water, Fig. 3. The inboard shield is 80 cm thick, while the outboard, top, and bottom shields are 120 cm thick. The exposed surfaces are sheathed with 5 cm of lead to attenuate the gamma radiation after shutdown.

The water-cooled outboard first wall is fabricated by manifolding 3.6-cm-diam stainless steel tubes in a serpentine arrangement, Fig. 4. These tubes have 0.8-cm-thick walls sized to accommodate the nominal erosion condition over the ten-year life of the DT operation and also to limit the maximum stress to 380 MPa (55 ksi).

A design concept for the disruption armor is illustrated in Fig. 5. Graphite tiles, 15 cm square, are installed on three of the walls of the plasma chamber. The tiles on the inboard wall are 3.0 cm thick, while those on the top and bottom walls, which are less effectively cooled by thermal radiation, are 2.5 cm thick. They are secured to the chamber wall by means of round graphite nuts that are threaded onto stainless steel studs attached to the wall.

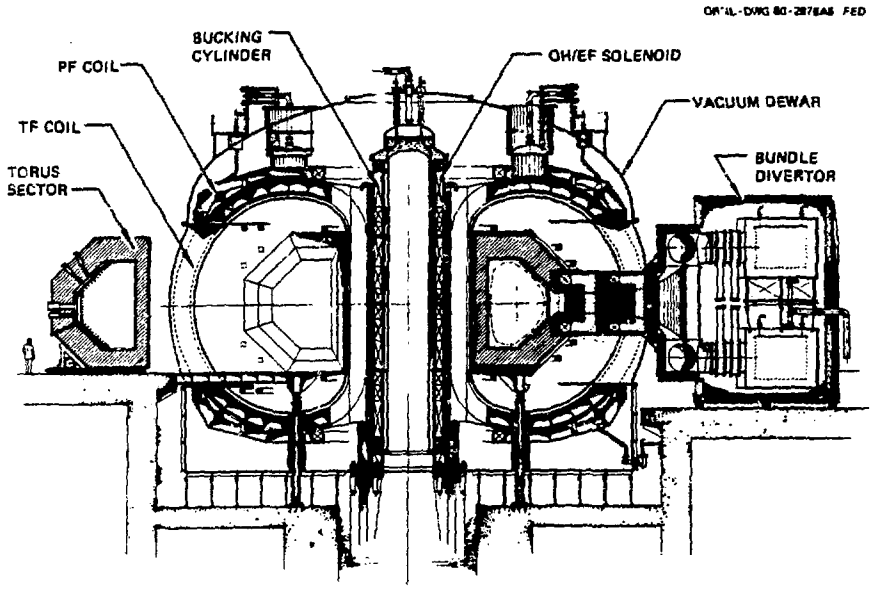

Fig. 1. Design 1 elevation.

Table 2. Design 1 parameters[a]

Plasma major radius, R	5.4 m
Plasma elongation, δ	1.6
Plasma minor radius, a	1.3 m
Plasma volume, V_p	289 m^3
Plasma current, I_p	6.1 MA
Total fusion power, P_{tot}	750 MW
Fusion power density, n	2.6 MW/m^3
Number of TF coils	10
TF coil vertical bore	10.8/12.6 m[b]
TF coil horizontal bore	7.5/8.6 m[b]
Field at TF coil, B_m	11.4 T
Field on axis, B_T	5.5 T
Total volt-seconds	85
Neutral beam power, P_{inj}	60 MW
Neutral beam energy, E_{inj}	150 keV
Injection time, τ_{inj}	6.0 s
Microwave power (startup)	5 MW
Microwave frequency	140 GHz

[a]Ref. 6.

[b]Design 1/Design 2.

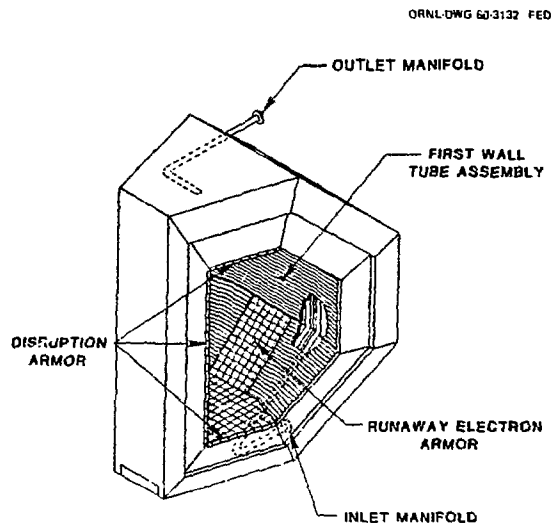

Fig. 2. Design 1 torus sector arrangement.

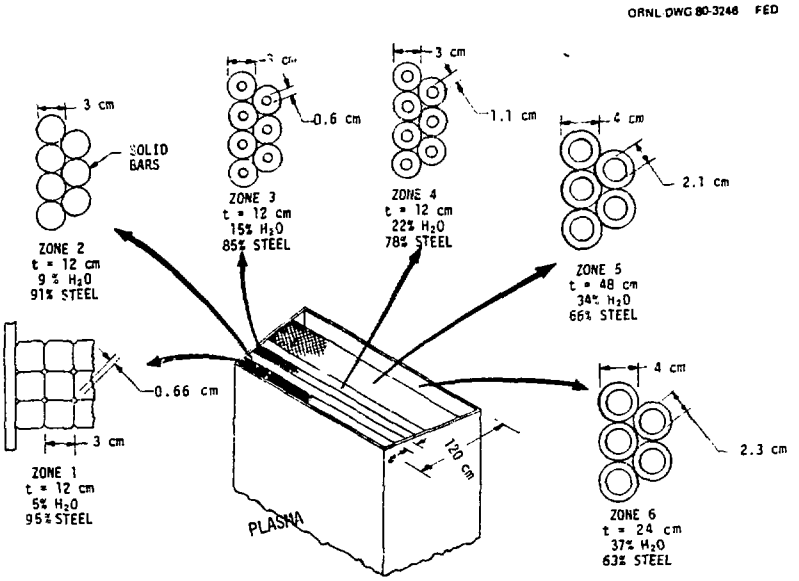

Fig. 3. Internal arrangement, outboard shield sector.

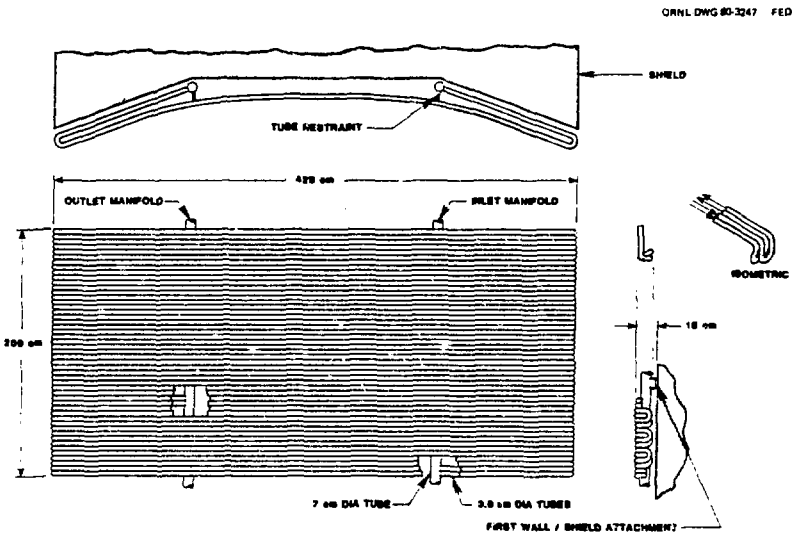

Fig. 4. First wall tube panel.

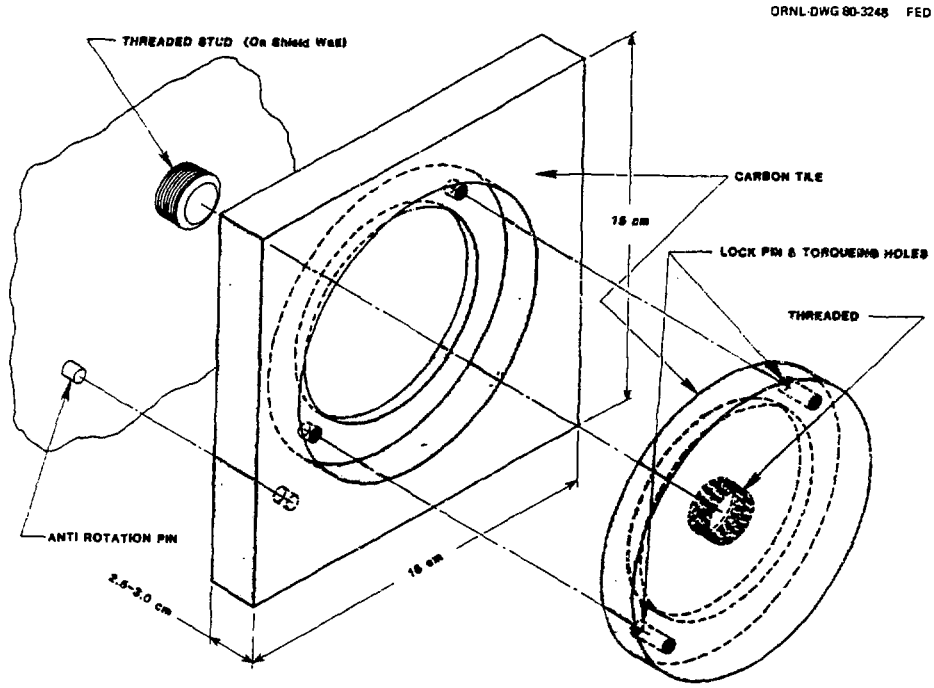

Fig. 5. Disruption armor.

Runaway electron protection is provided by 2-cm-thick graphite tiles brazed to a water-cooled panel structure, Fig. 6. These panels are installed flush with the outboard stainless steel first wall over a 10° segment of the shield sector between adjacent TF coils. Depending upon toroidal field direction, the runaway electrons move to either the upper or the lower facet of the outboard wall. The armor is placed on both facets, recognizing that helium ions will cause an erosion problem on the surface opposite that on which the runaway electrons impinge.

The shield segmentation arrangement is shown in Fig. 7. Ten sectors, into which all of the first wall and first wall armor are mounted, are inserted into a support spool, Fig. 8, in such a way that they can be removed with a single radial movement.

The support spools are fabricated by joining water-cooled frames with stiffened panels. While the frames are stainless steel, the panels are fabricated of Inconel to take advantage of the alloy's higher strength and lower electrical conductivity.

The electromagnetic loads imposed by changing fields are carried from the torus sectors into the support spool by means of insulated structural fittings, Fig. 9. The vacuum boundary, formed by the support spool and the surfaces of the individual shield sectors, is then completed by the bellows seals that bridge the interface between the shield sectors and the support spool.

To remove a torus sector for maintenance, the lip seals used to attach the bellows are ground off to remove the bellows and the load carrying brackets are removed. A temporary bridge floor is installed between the torus support structure and the reactor building floor, Fig. 1. The plug shield at the base of the sector is then removed, and an air bearing pad is inserted in this cavity. When air is supplied, the pad lifts the sector sufficiently to permit its extraction.

3.2 Design 2

Design 2 is similar to Design 1, except that the torus has to be about 1 m greater in the vertical dimension and the TF coils about 1 m larger in horizontal bore to accommodate the poloidal divertor and to permit removal of the torus sectors, Fig. 10. Also, much larger poloidal field coils are required due to the

ORNL-DWG 80-3249 FED

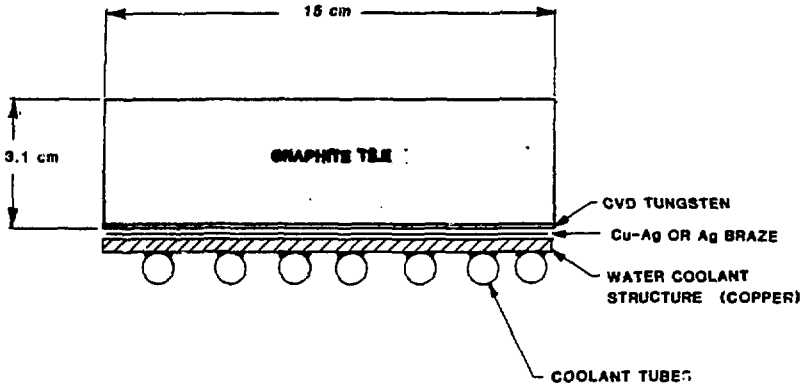

Fig. 6. Runaway electron armor.

ORNL-DWG 80-3133 FED

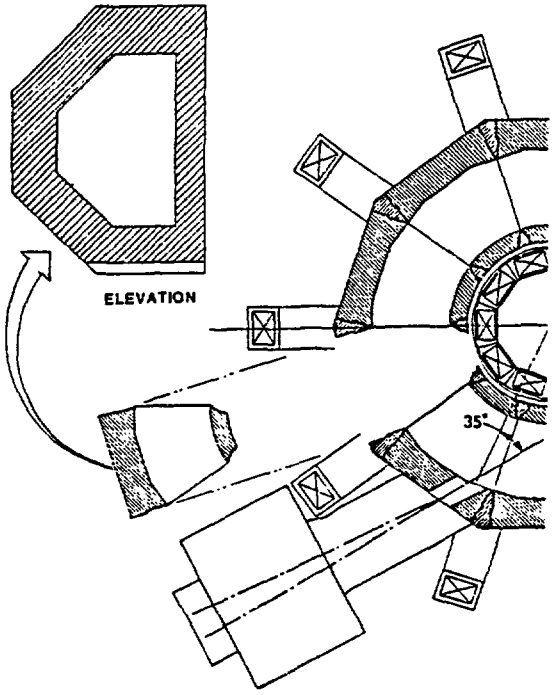

Fig. 7. Torus shield segmentation.

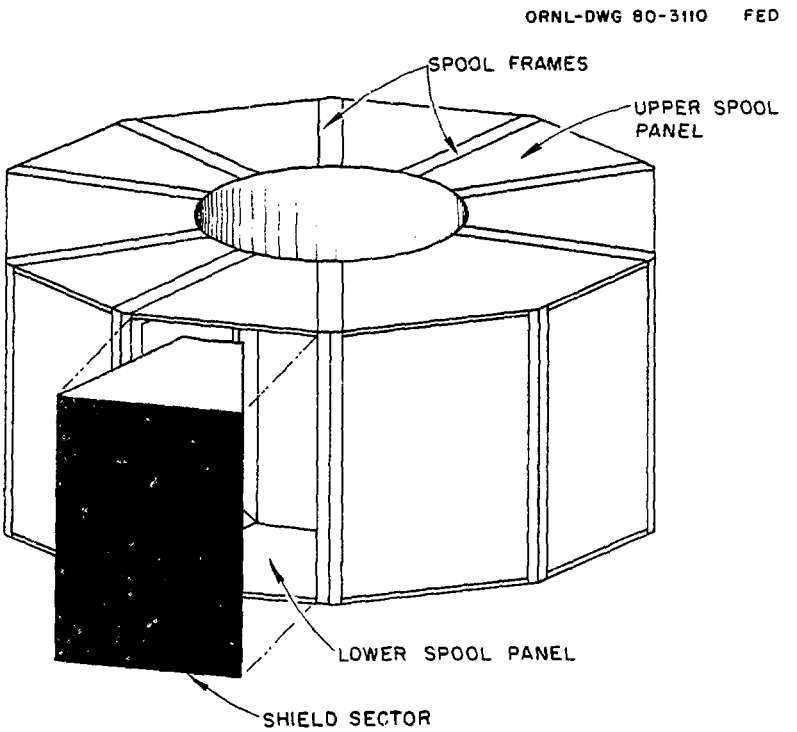

Fig. 8. Torus support spool.

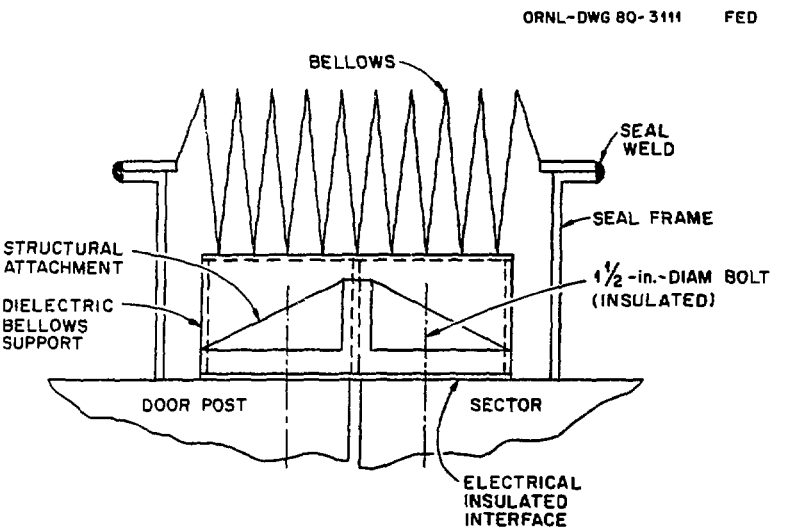

Fig. 9. Torus sector structural arrangement and vacuum seal.

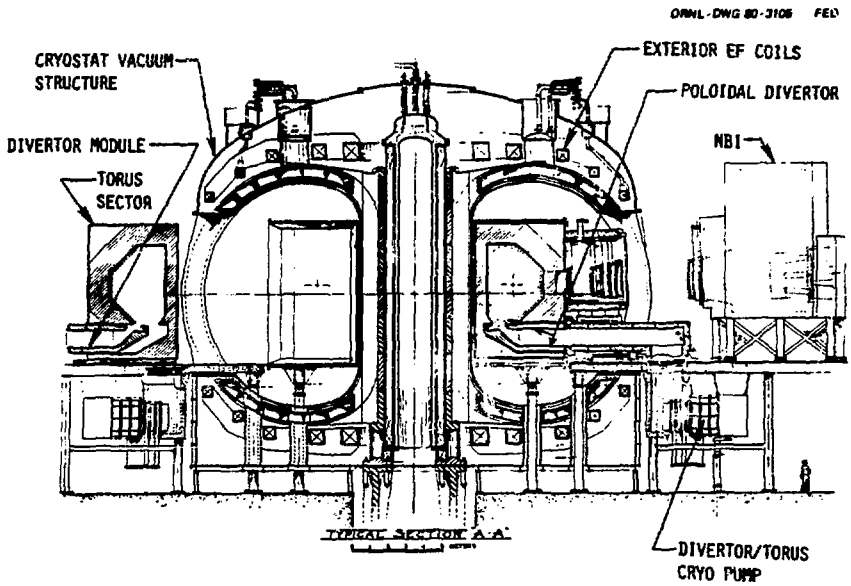

Fig. 10. Design 2 elevation.

larger displacement of the coils from the plasma, and additional coils are required to generate a plasma separatrix for the poloidal divertor.

The plasma chamber first wall, disruption armor, and runaway electron armor are essentially the same for Design 2 as for Design 1. However, a limiter is installed in the outboard wall, Fig. 11, to provide for plasma edge scrape-off during startup while the divertor coil current is being raised.

The divertor targets are designed so that they can be individually removed, Fig. 12.

4. Torus Design Considerations

This section presents a description of how the ETF design responds to some of the more significant requirements and environments. In addition, the design status is such that several options or alternatives are being explored, and these are presented and discussed.

4.1 Shield Segmentation

Shield segmentation is based on dividing the torus into sectors defined by radial planes. The design objective is to define the segmentation so as to permit removal of a sector between the TF coils. Hence, the number and size of the TF coils significantly influence the sector segmentation concept. It is possible to define the number of sector segments so that their number is some multiple of the number of TF coils (1, 2, 3, etc.) or, in some cases, a factor like 1.33 times the number of TF coils. The sector segments may all be of equal size, or they may be different. Generally, however, it is awkward to incorporate more than two different sizes.

In removing sector segments from between TF coils, one, two, or three motions may be employed. These are illustrated in Fig. 13. In Fig. 13(a), the size of the segment ABCD corresponds to the case where the number of segments equals the number of TF coils. In the installed location, the edge of the segment is directly underneath the centerline of the TF coil. The radial extent of the segment and the horizontal bore of this TF coil are defined so that the segment may be withdrawn along the line EF such that the corners B and C clear the outboard leg of the TF coil. In this case, it is also possible to move the segment part way out in the direction EF and lift the segment with an overhead crane (normal to the plane of the paper).

In Fig. 13(b), a case is illustrated where the number of segments is twice the number of TF coils. Segments ABCD and EFGH are centered directly beneath the TF coils. Sector segment IJKL is located midway between the TF coils. This sector may be withdrawn directly in a single radial translation. Then the sector segments underneath the TF coils may be rotated in the toroidal direction until they are located between TF coils. A radial translation may be then applied to withdraw the segment.

For the situation where the number of segments is between one and two times the number

ORNL-DWG 80-3250 FED

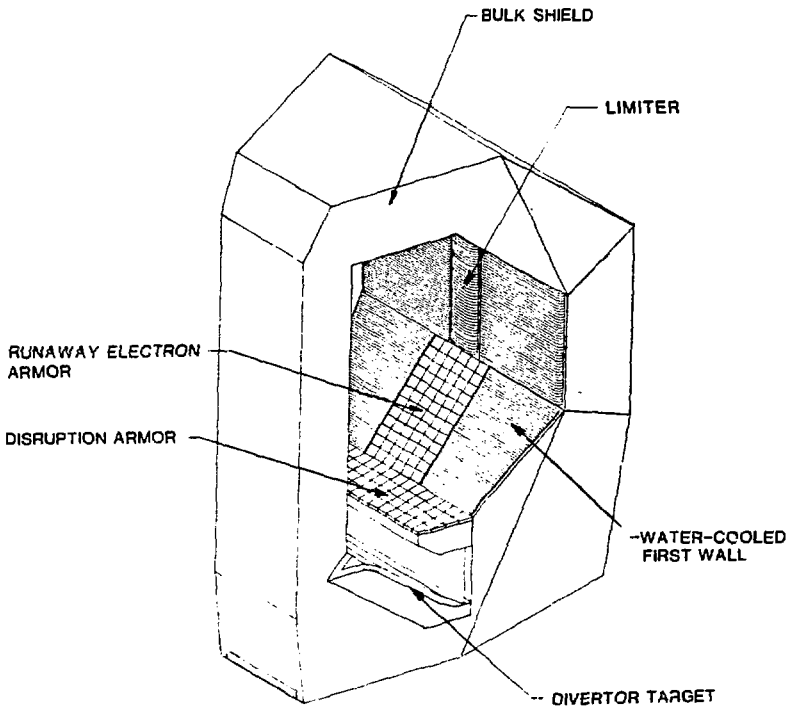

Fig. 11. Design 2 torus sector arrangement.

ORNL-DWG 80-3251 FED

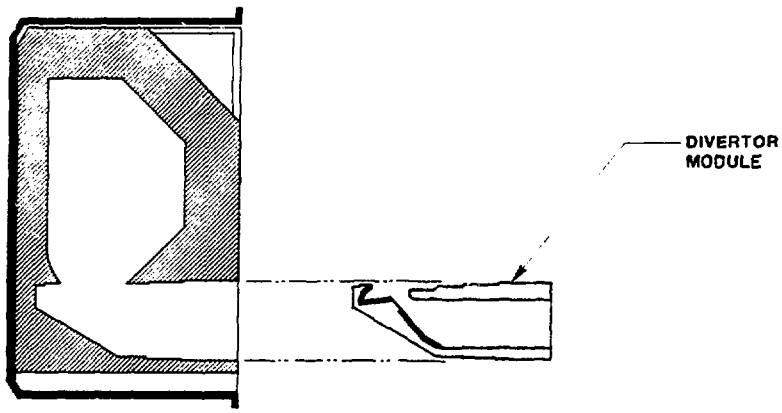

Fig. 12. Divertor module arrangement.

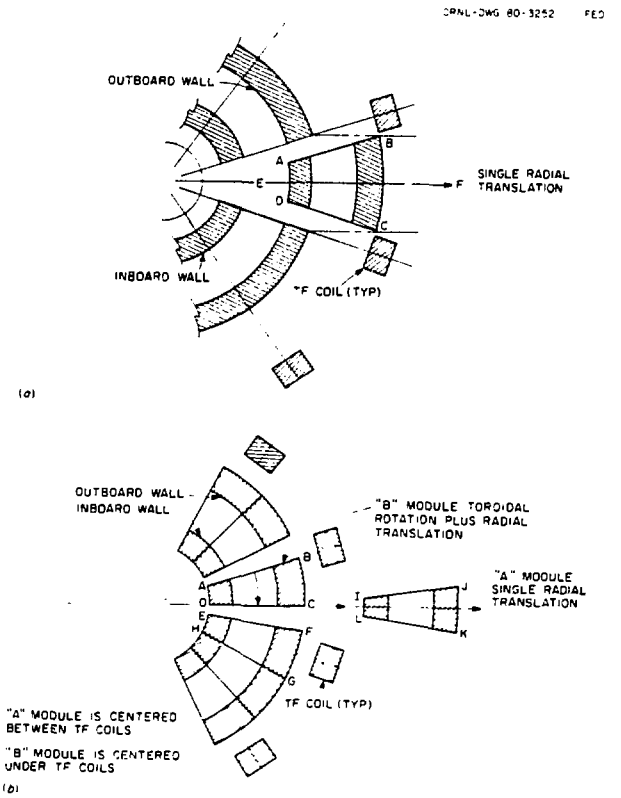

Fig. 13. Torus shield segmentation considerations. (a) Number of sequal to number of TF coils. (b) Number of sectors equal to twice number of TF coils.

of TF coils, the relative location of the segment to the TF coil may be repeated only a few times around the torus. For instance, with 12 coils and 16 segments, the pattern is repeated in each of the four quadrants. For each of four segments, there are three openings between TF coils. With ten TF coils, the specific relative location is repeated only every 180° in the torus.

Some of the more important segment removal features are summarized in Table 3 for the cases of 12 and 10 TF coils. Generally, when the number of segments is set equal to the number of TF coils, the removal sequence is much simpler but at the expense of some TF coil size.

Since the simplest replacement sequence results from the arrangement where the number of segments equals the number of TF coils, this technique was selected for the reference design and approaches were investigated that reduced the impact on TF coil size. One such approach, shown in Fig. 14, involves the use of radial frames. A section through each frame leg is triangular. In effect, these frames permit leaving some of the shield structure in the permanent support spool structure; hence, the segment critical clearance dimensions are reduced.

The use of segments and the placement of the vacuum boundary at the outer shield resulted in the support spool structure shown in Fig. 8. This approach permits bringing all the vacuum seals, which must be broken for segment removal, out to the outboard shield surface where they are accessible for maintenance activities.

4.2 Sector Replacement

In examining the motion required to remove a segment, it is clear that a significant amount of horizontal motion is required. Radial motion is always required, and in some cases toroidal

Table 3. Segmentation concepts

Number of TF coils	Number of segments (toroidal span)	Removal features
12	12 (30°)	• Single radial motion • Only failed segment need be removed • Largest impact on TF coil size
12	16 (22.5°)	• Toroidal rotation plus radial translation required for some segments • Removing one failed module may require removing two other good modules • Intermediate impact on TF coil size
12	24 (15°)	• Toroidal rotation plus radial translation required for some segments • Removing one failed module may require removing one other good module
10	10 (36°)	• Single radial motion • Only failed module need be removed • Largest impact on TF coil size
10	20 (18°)	• Toroidal rotation plus radial translation required for some segments • Removing one failed module may require removing one other good module

rotation is required. Overhead vertical translation is denied until the segment is significantly displaced outward relative to the TF coils.

There are two basic approaches to achieving horizontal displacement. They are:

(1) wheeled or tracked techniques, and
(2) air flotation techniques.

Wheel diameters must be small, which makes steering a difficult problem. Air flotation has more steering flexibility, but flotation pressures tend to be high because of the high density of the shield segment structures.

In either case, it is desirable to palletize the transportation mechanism so that it may be installed only for maintenance activities and does not compromise a basic shielding function during reactor operation.

In the case where only radial motion is required, the insertion of a pallet transporter is relatively straightforward, Fig. 15. The segment is recessed at the base, and a shield plug is installed for normal operation. For segment replacement, the shield plug is removed and the pallet inserted. When the segmentation concept requires toroidal rotation, the pallet must be inserted from the side of the segment, requiring the prior removal of an adjacent segment. In this case, two types of pallet are required.

4.3 Vacuum Sealing

With the incorporation of a spool structure and the spool frames, Fig. 8, the sector may be vacuum sealed with the use of several techniques. It is desired that the seal technique possess several characteristics:

- accessibility,
- inspectability,
- easy replaceability with remote techniques,
- separation from structure,
- tolerance to misalignment of shield segment,

1104
5-78)
R INDEX
x 14 11/16 PHOTOMASTER (DOUBLE 4 1/16 x 11 5/8 COLUMN)
EDUCTION (FINISH SIZE 8 1/2 x 11 - DOUBLE 3 1/16 x 8 11/16 COLUMN)

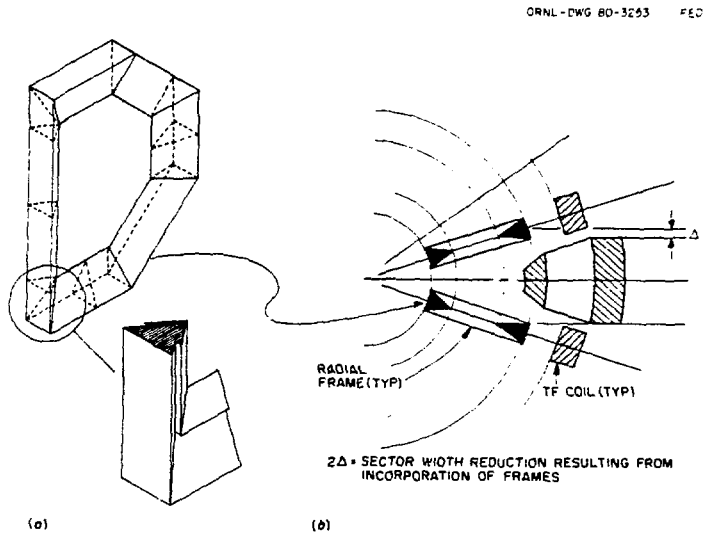

Fig. 14. Incorporation of radial frames.

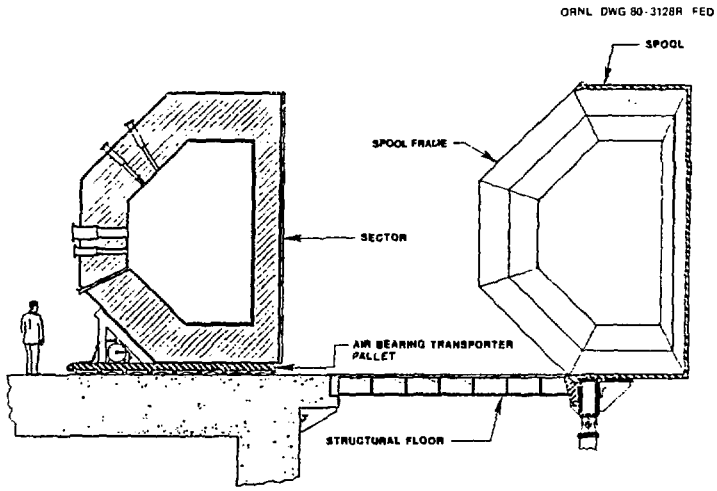

Fig. 15. Palletized air bearing concept.

INDEX
14 11/16 PHOTOMASTER (DOUBLE 4 1/16 x 11 5/8 COLUMN)
DUCTION (FINISH SIZE 8 1/2 x 11 - DOUBLE 3 1/18 x 8 11/16 COLUMN)

- resistance to radiation damage,
- compatibility with bakeout techniques, and
- minimization of virtual leaks.

The nonstructural characteristic of the seal required the development of a preferred means of structural attachment. Consequently, all structural attach points between the shield sectors and the spool structure were located on the spool rim and the spool frame members, Fig. 9. These attachments are then made prior to seal installation and provide for sector alignment. The sector vacuum seals are then placed over the gap between the sector and the spool rim and frames. Whether the approach is a welded seal, mechanical seal, or inflatable seal, the same approach to covering or sealing the gap is employed. Several variations from the reference design are illustrated in Fig. 16. All include a bellows in the seal structure, which permits alignment flexibility and a high electrical resistance.

All of the concepts have provisions for supporting the bellows in the presence of atmospheric pressure loads. They also include provisions for pumping the volume immediately under the seal and over the sector/frame gap.

The inflatable seal approach does not appear to offer any advantages over the mechanical approach in replacement time because the same bolting technique must be employed in either case. Consequently, current investigators are concentrating on the welded versus the mechanical seal approaches.

4.4 Electrical Resistance in the Torus Shield Structure

Both Design 1 and Design 2 are being examined for two startup scenarios. These are the so-called low voltage and high voltage scenarios, calling for rf-assisted startup in the low voltage case and a more conventional ohmic heating with the use of blip coils in the high voltage scenario.

The estimated electrical properties in the torus structures for each of the two startup scenarios are summarized in Table 4. It will be noted that the resistance required in the vacuum vessel is an order of magnitude higher for the high voltage startup.

Two general approaches are available for meeting the resistance requirements. They are:

(1) providing high resistance continuous structure through $\rho\ell/A$, where ℓ is the path length and A is the cross section area, the geometry is controlled by ℓ/A, and material property is controlled through ρ, the resistivity, and

(2) providing infinite resistance through discontinuous structures (dielectric break).

In the first case, the problem is to get material gages low enough while still satisfying the structural load carrying requirements. In the second case, the problem is to maintain vacuum integrity at the dielectric break location.

Figure 17 illustrates the approach employed to meet the low voltage startup requirements. The spool panels consist of Inconel 625 double-skin corrugations. In order to meet the high voltage startup requirements, a dielectric break is installed in the spool frame, Fig. 18. Several configurations of the break are under investigation. One of these is illustrated in Fig. 19. The cavity behind the seal assembly is pumped by the vacuum system. In configuration (b), the dielectric is a polyimide fiberglass laminate that serves as both the dielectric and a separate vacuum seal, formed by a polyimide ring supported by a stainless steel membrane.

For the ETF, the high resistance continuous structure is marginal for the low voltage startup and unacceptable for the high voltage startup. Installation of a proven dielectric break would result in satisfactory startup characteristics for both scenarios.

An additional consideration in providing certain electrical features is that of protection from disruption. The transfer of electrical energy from the plasma to other torus components could result in damage to the poloidal or toroidal field coils. To prevent this, it would be desirable if the vacuum vessel could accommodate all of the plasma current. This requires a relatively low resistance current path in the torus structure, which is in opposition to the startup requirements. Since the sectors are electrically isolated from each other except at the vacuum seals, which contain a high resistance bellows, one approach now under consideration involves permitting the induced current to arc from one sector to another during a disruption. The arcs would be launched and captured on carbon pads located poloidally around the inner surface of each shield sector.

4.5 First Wall

First wall design considerations are dominated by the plasma disruption scenario. The scenario adopted for the ETF design includes the position that the energy from major disruptions will, in the majority of cases, land on the inboard, top, or bottom walls. This scenario then results in protecting the inboard, top, and bottom walls with armor.

4.5.1 Inboard, Top, and Bottom Walls. Design options include both actively and passively cooled armor. The reference design is a passively cooled approach and was selected because of maintenance considerations. In the event of localized damage, i.e., less than a square meter, the individual tiles of this approach may be replaced *in situ* without removing a complete sector.

A major consideration of the material employed in the armor is the Z number. If there is a significant amount of physical sputtering

104
-981
R INDEX
(14 11/16 PHOTOMASTER (DOUBLE 4 1/16 x 11 5/8 COLUMN)
EDUCTION (FINISH SIZE 6 1/2 x 11 - DOUBLE 3 1/16 x 8 11/16 COLUMN)

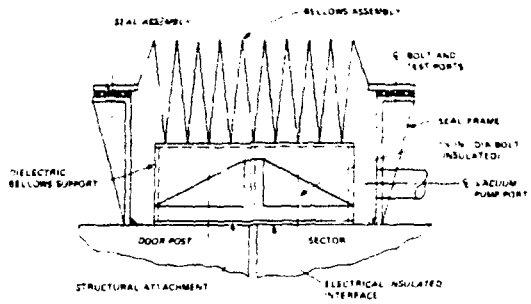

MECHANICAL SEAL OPTION

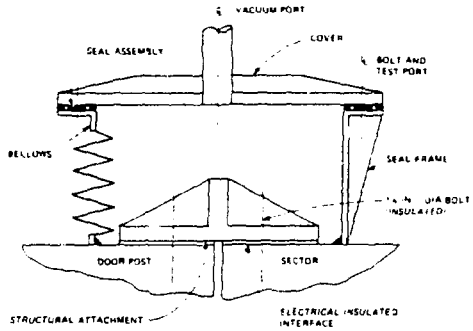

RIGID COVER DESIGN OPTION

Fig. 16. Sector vacuum seal design options.

Table 4. Torus shield electrical properties

	Requirements		Design status	
	Low voltage startup	High voltage startup	Design 1	Design 2
Time constant, L/R	100 ms	10 ms	187 ms	244 ms
Inductance, L			15 μH	17 μH
Resistance, R			0.08 mΩ	0.07 mΩ

TORUS CHAMBER RESISTANCE SCHEMATIC

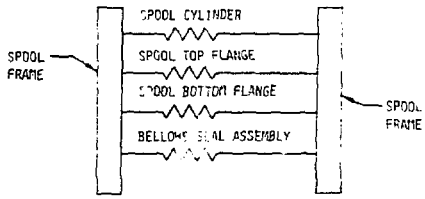

104
-781
R INDEX
(16 11/16 PHOTOMASTER (DOUBLE 4 1/15 X 11 5/8 COLUMN)
EDUCTION (FINISH SIZE 8 1/2 x 11 - DOUBLE 3 1/16 X 8 11/16 COLUMN)

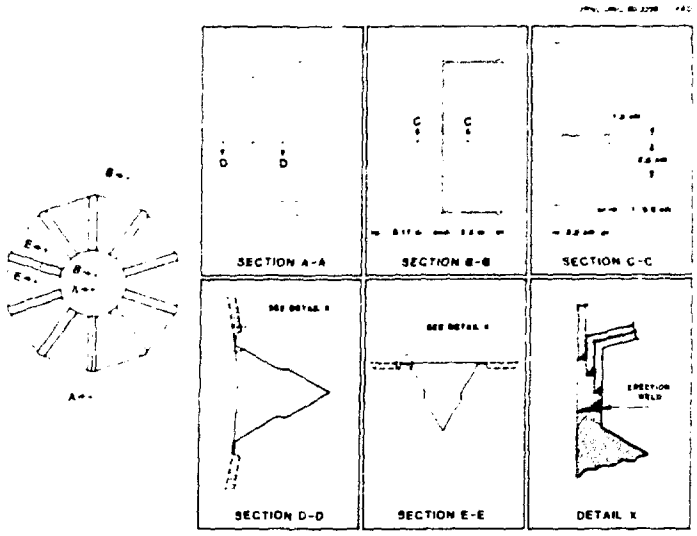

Fig. 17. Support spool structural configuration.

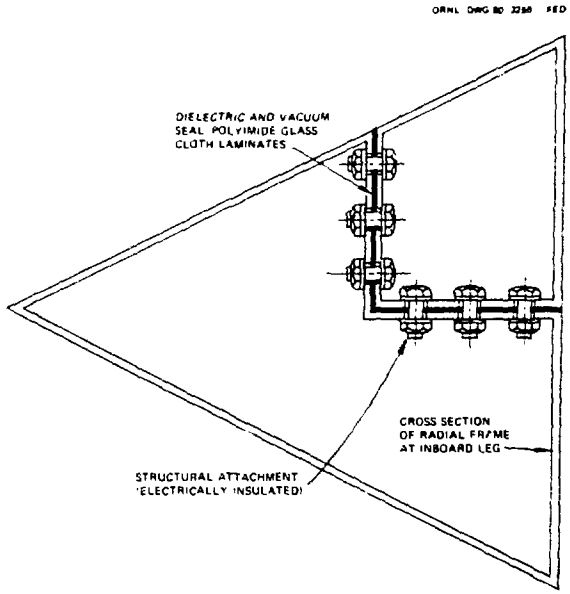

Fig. 18. Reference concept of a dielectric break.

106
781
INDEX
14 11/16 PHOTOMASTER (DOUBLE 4 1/16 x 11 5/8 COLUMN)
DUCTION (FINISH SIZE 6 1/2 x 11 - DOUBLE 3 1/16 x 8 11/16 COLUMN)

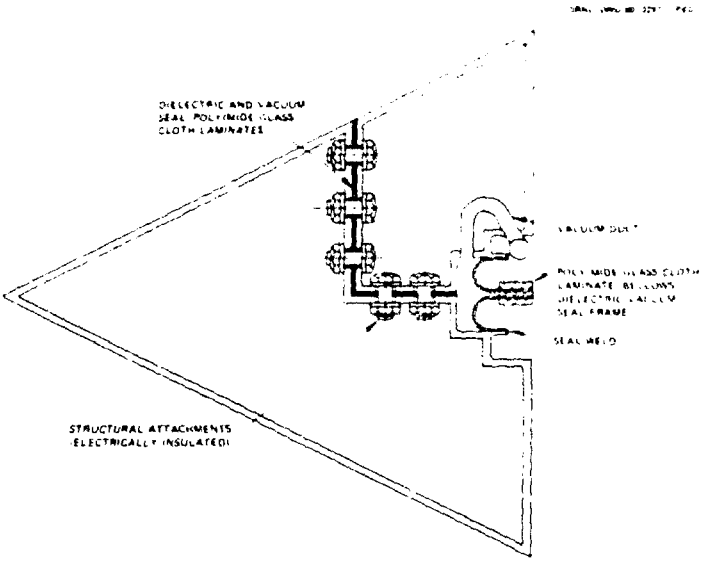

Fig. 19. Design option for a dielectric break.

due to interaction of charge exchange neutrals with the wall, then it will be imperative to work with only low-Z materials (Z < 28). This would completely eliminate the use of the refractory metals. Graphite was selected as the reference material because of its ability to operate at high temperatures (>1000°C) and its ability to withstand thermal shock. The equilibrium operation temperature of the graphite is limited to ≤1300°C, which is at the threshold of acetylene generation due to the chemical reaction between the hydrogen plasma and the carbon tile material. The methane generation range (400-800°C) is low enough that very little time is spent in this range and, hence, material loss is negligible. The temperature variation with time in a 5-cm-thick tile mounted on the inboard wall is shown in Fig. 20. This variation is also characteristic of the top and bottom walls. In this case, because of the higher heat loads in these areas, the tile must be thinner (2.5 cm) to limit the equilibrium temperature to 1300°C. The heat radiated to the outboard wall (actively cooled) is shown in Table 5.

Consideration of the accommodation of energy from plasma disruptions results in a material loss rate of 0.25 cm per calendar year. This material loss is approximately nine times the rate of loss due to physical sputtering for the carbon material.

The use of an actively cooled inboard wall is a viable option, but it involves potential maintenance penalties. These are a result of the coolant interface with the shield sector. Repairing localized damage will require that the coolant disconnects be made inside the plasma chamber if removal of the entire sector is to be prevented. The requirement for an accessible coolant connection with clearance for remote welding equipment will place a severe penalty on the size of the plasma chamber and will bear on the size of the reactor. Consequently, an actively cooled inboard wall will probably have to be repaired by removing an entire sector to the hot cell.

4.5.2 Outboard Wall. If plasma disruptions can be confined to the inboard wall, the function of the outboard first wall can be limited to that of heat removal. In the case of the ETF reference design, where the inboard, top, and bottom walls are passively cooled, the heat load of the outboard wall includes a large fraction of the heat load radiated from these areas. However, for ETF, handling this heat load is entirely feasible using a simple wall-cooled tubular design.

The major considerations are the erosion rates resulting from physical sputtering and fatigue stresses resulting from thermal cycling. These are conflicting design requirements, with first wall coolant tube wall thickness increasing to permit longer life from an erosion standpoint and decreasing to permit longer life from a fatigue standpoint. This trade-off is shown in

104
-78)
R INDEX
(4 11/16 PHOTOMASTER (DOUBLE 4 1/16 x 11 5/8 COLUMN)
EDUCTION (FINISH SIZE 8 1/2 x 11 - DOUBLE 3 1/16 x 8 11/16 COLUMN)

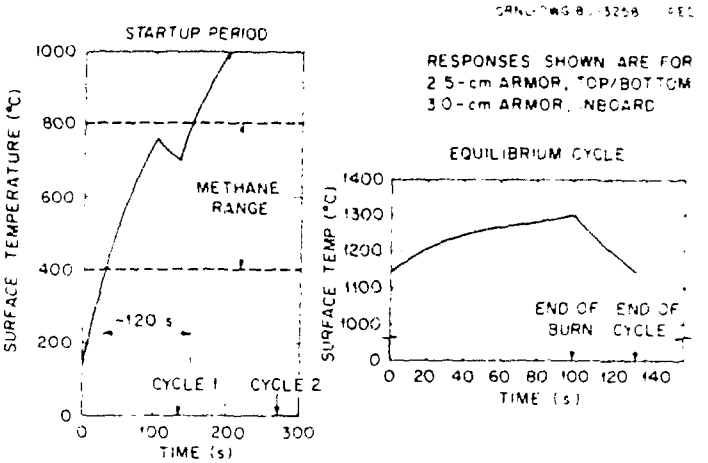

Fig. 20. Graphite armor surface temperature, normal plasma operation.

Table 5. Outboard wall heat sources

	During plasma burn	During dwell period
Heat flux from plasma	17.1 W/cm²	0.0 W/cm²
Heat flux from armor	18.6 W/cm²	8.0 W/cm²
Total outboard wall heat flux	35.7 W/cm²	8.0 W/cm²

Fig. 21. In this case, however, the life was set by a maximum stress condition [380 MPa (55 ksi)] rather than the number of fatigue cycles.

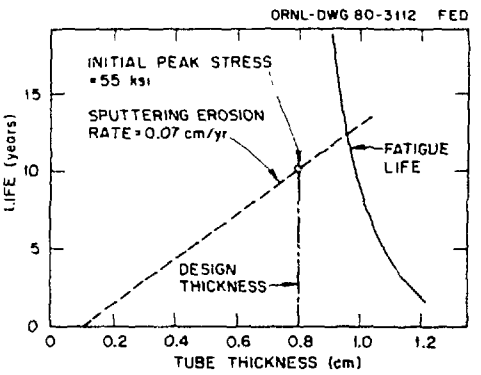

Fig. 21. Outboard first wall life.

Other design options for the outboard first wall may be categorized as plate walls with several possible variations based on the manner of fabricating the plate surfaces. Shown in Fig. 22 is a plate made up of a flat sheet and an embossed sheet forming the coolant passages. The flat sheet is made to the desired thickness to handle the erosion, and the embossed sheet can be thin enough to handle only the coolant pressure requirement [6.895 kPa (100 psi)].

A third option for the outboard first wall is a wall that is integral with the shield. If sputtering erosion is a real problem, as current data indicate, then damage to the first wall must be repairable. Hence, an integral approach was ruled out because of the possibility of having to replace an entire shield sector.

The outboard wall must also be protected from runaway electrons. This requires protection over and above what a tubular first wall can provide. The protection must be provided, however, only in limited areas ~ 10° toroidal arcs midway between TF coils. Because the total heat load is higher on this outboard wall, the use of the passively cooled technique is not feasible. Hence, an actively cooled design is

04
78)
INDEX
14 11/16 PHOTOMASTER (DOUBLE 4 1/16 x 11 5/8 COLUMN)
DUCTION (FINISH SIZE 8 1/2 x 11 - DOUBLE 3 1/16 x 8 11/16 COLUMN)

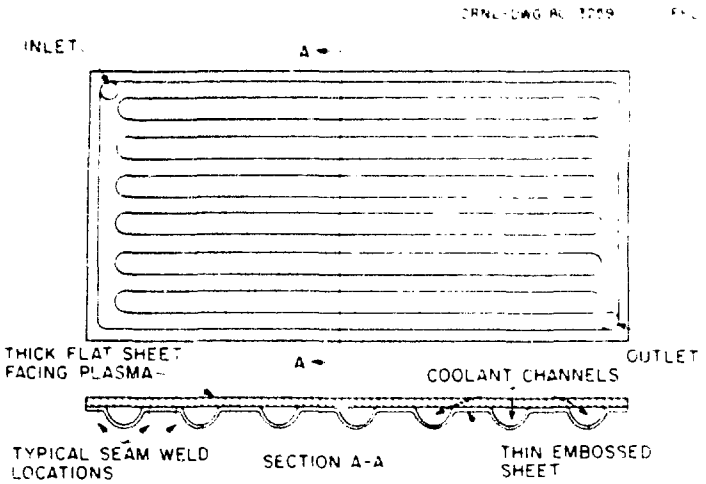

Fig. 22. Outboard first wall design option.

employed. Such an approach, illustrated in Fig. 6, uses graphite tiles bonded to an actively cooled substrate. Coolant flows that keep the graphite temperatures below 400°C are required. The thickness of the graphite material is determined by the energy attenuation requirements of the electrons.

4.6 Limiters

Many of the early fusion devices incorporated some sort of limiter. The function of the limiter in these designs was either (1) to provide protection for the wall from plasma disruption or (2) to shape the plasma edge in the absence of a divertor. ETF Design 2 employs a magnetic poloidal divertor, but during startup the divertor is ineffective because of the transient nature of the poloidal coil current. A limiter design, Fig. 23, was therefore developed to provide plasma edge control during this period.

The design conditions for the limiter are summarized in Table 6. During the first two seconds of startup, the limiter is radially positioned to define the outboard boundary of the plasma. At the end of this period, the limiter is retracted to conform to the outboard first wall surface. Because of the sensitivity of the limiter peak temperature to the short time spent at the plasma boundary, manual operation of the limiter is precluded and automatic control is a required feature. The operating environment during the remainder of the burn cycle is identical to that of the outboard first wall. Because of this, the limiter is similarly affected by erosion and fatigue considerations.

Table 6. Limiter requirements (Design 2 only)

Task	
Establish the plasma edge during startup of each burn cycle	
Conditions	
Power	5 MW
Duration	6 s
Particle energy	20 eV

The impact of these factors on limiter life is, however, more severe due to the higher temperatures and the higher rate of erosion during startup.

The predicted life for the limiter is shown in Fig. 24 as a function of tube wall life. Because the limiter's life is significantly shorter than that of the reactor and because it is susceptible to damage, the design approach that was adopted permits replacement without requiring removal of the entire sector.

5. Nuclear Considerations

Nuclear design of a tokamak bulk shield is a much more complex problem than the analogous design of a fission reactor shield. The competing requirements on the inboard shield — minimum thickness versus adequate protection of inboard components versus low cost — are reminiscent of the Aircraft Nuclear Propulsion Program with its severe shielding constraints.

104
-78]
R INDEX
(14 11/16 PHOTOMASTER (DOUBLE 4 1/16 x 11 5/8 COLUMN)
EDUCTION (FINISH SIZE 8 1/2 x 11 - DOUBLE 3 1/16 x 8 11/16 COLUMN)

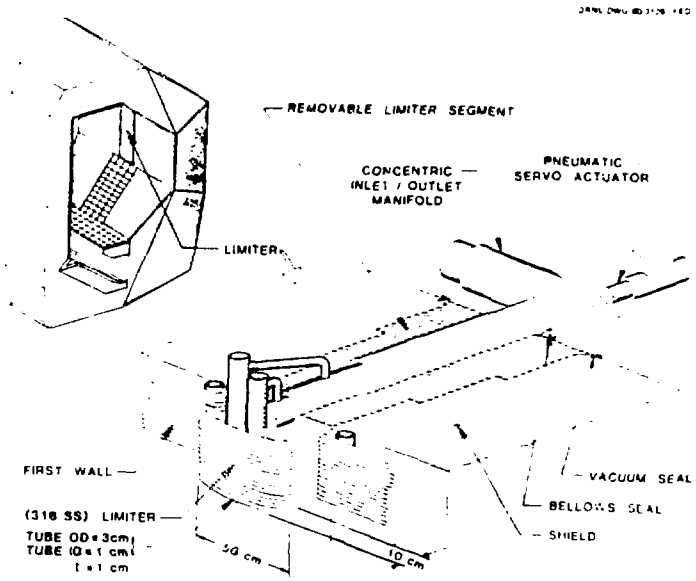

Fig. 23. Limiter configuration.

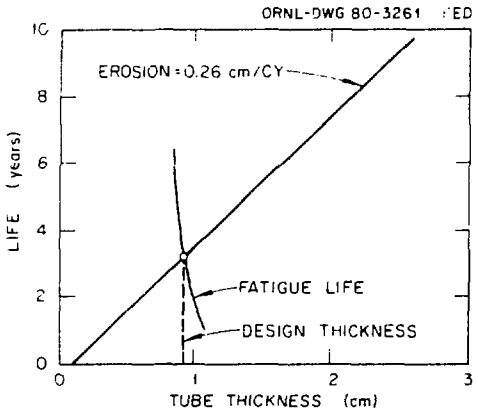

Fig. 24. Limiter life.

Abdou has ably covered the influence of inboard shield designs on the torus and TF coil dimensions.[3] The results of his studies show that large economic benefits accrue in minimizing the thickness of the inboard shield. On the other hand, trade-off studies performed by Woods[4] and others indicate that incorporation of exotic materials such as tungsten may not be cost-effective. Hence, an early decision in the ETF preconceptual design stage was to retain the stainless steel and borated water shielding materials proposed in the Westinghouse/ORNL INS concept.[5] Such materials are relatively inexpensive, well understood in both physical and nuclear properties, readily fabricable, and domestically available, and the water can also serve as the coolant.

It was known from analyses performed by Gilai[6] and others that enhanced shield performance could be obtained by a judicious preferential distribution of materials, as opposed to a homogeneous mixture of stainless steel and borated water. A major caveat governs this approach — the intent should be to minimize the shield thickness for the most important single radiation criterion, whether this is exposure of TF coil organic insulation, displacements in copper, heating rate in the dewar, or shutdown radiation level outside the shield. In optimizing for a single criterion, it is tacitly assumed that considerable design margin exists in the other criteria. For instance, when the shield is tailored for minimum displacements per atom (dpa) to copper, it is possible that the dewar heating rate may exceed the homogenized shield level.

104
-79)
R INDEX
14 11/16 PHOTOMASTER (DOUBLE 4 1/16 x 11 5/8 COLUMN)
EDUCTION (FINISH SIZE 8 1/2 x 11 - DOUBLE 3 1/16 x 8 11/16 COLUMN)

Gilat's study did not consider insulation exposure or shutdown dose rate. It was hypothesized early in the ETF nuclear analysis effort that minimizing dpa to the copper (equivalent to minimizing fast neutron leakage from the shield) would also minimize damage to G10 insulation (which is very sensitive to fast neutrons) and the shutdown dose rate. Therefore, for preconceptual design purposes, the material distribution from Ref. 6 for minimum dpa was adopted, as shown in Fig. 25.

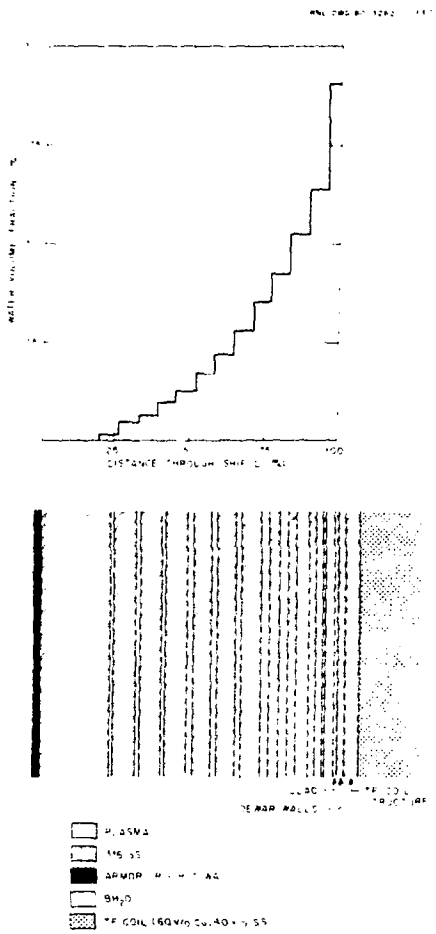

Fig. 25. Optimal steel-water distribution in shield.

One-dimensional discrete ordinates calculations utilizing the ANISN code were performed on this configuration, for shield thicknesses of 0.7, 1.0, and 1.2 m. A 25-group neutron, 21-group gamma cross section set was used, collapsed from DLC-41. Response functions were obtained from DLC-60. The P_3S_{16} approximation was run in slab geometry.

Figure 26 shows the resulting nuclear responses as functions of shield thickness, for a neutron wall loading of 1.5 MW/m². Given a specific radiation criterion, the required bulk shield thickness can be picked off the appropriate curve.

The selection of radiation criteria for ETF is fully discussed in Ref. 2. Briefly, the G10 insulation exposure limit was set at 10^9 rads (10^7 Gy), the copper dpa at 2.8×10^{-7} (assumes two anneals), the inboard TF coil heating rate at 7 kW (~2 mW/cm³), and the external shutdown dose rate at 2 mrem/h.

Table 7 lists the important nuclear characteristics of the current 82-cm inboard shield and a less conservative 75-cm design.

With respect to the ETF outboard shield, preliminary calculations of the shutdown dose rate indicated that an operating biological dose rate of 500 rem/h converts to a shutdown dose rate of approximately 30 mrem/h at 12 hours and 20 mrem/h at 24 hours. Figure 26 implies that an outboard shield thickness of about 1.4 m would be required to meet the 2-mrem/h criterion. However, by replacing the stainless steel 316 in the outer layers of the shield and in the dewar and magnet structure with stainless steel 201, adding 5 cm of lead to the outside of the shield, and allowing 24 hours for shutdown, the 2-mrem/h rate could be achieved with a 1.25-m outboard bulk shield.

Further optimization calculations would undoubtedly result in reductions in bulk shield thickness. However, it may well be that nonhomogeneities in the shield structure, cooling provisions, gaps, and penetrations will ultimately dictate the minimum thickness obtainable.

6. Conclusions

The design of the first wall-shield system for the ETF poses a number of difficult, and sometimes conflicting, technical challenges. The first difficulty is the definition of loading conditions. The plasma conditions have to be projected on the basis of rudimentary experimental data and incomplete theoretical modeling. As a result, the estimates of the plasma conditions are only very crude at best.

Many uncertainties also exist in the structural response of the torus components to the loading conditions. While the material being considered is reasonably well characterized for nonnuclear applications, data on its performance after exposure to high neutron fluences

104
.78)
INDEX
14 11/16 PHOTOMASTER (DOUBLE 4 1/16 x 11 5/8 COLUMN)
DUCTION (FINISH SIZE 8 1/2 x 11 - DOUBLE 3 1/16 x 8 11/16 COLUMN)

ORNL-DWG 80-3263 FED

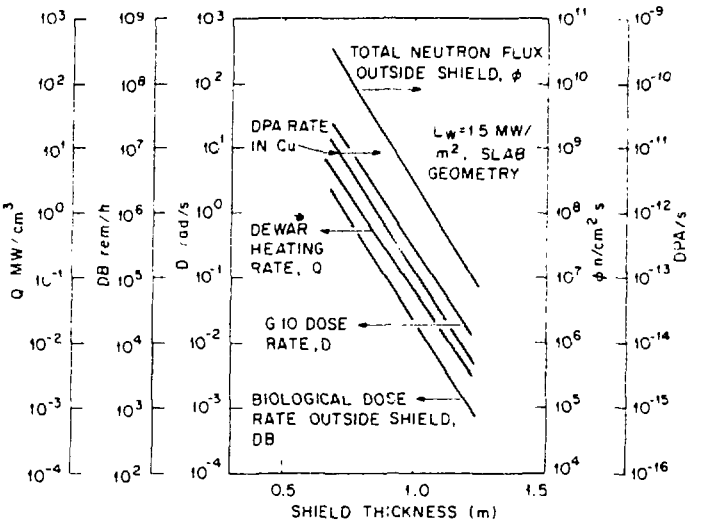

Fig. 26. Important shield behavior.

Table 7. ETF inboard shield characteristics

	Shield thickness	
	82 cm	75 cm
Neutron wall loading	1.5 MW/m²	
Fusion neutron current at armor	6.7×10^{14} n/cm² s	
Total neutron flux in armor	1.04×10^{15} n/cm² s	
Initial nuclear heating rate in armor	27 W/cm³	
Initial nuclear heating rate in shield	23 W/cm³	
Total nuclear heating in armor	32 W/cm²	
Total nuclear heating in shield	188 W/cm²	
Overall energy multiplication	1.47	
Initial Co 58 concentration in shield[a]	2.7 Ci/cm³	
G10 insulation dose rate	3.5 rad/s	9 rad/s
Operating time[b]	5.5×10^7 s	
G10 insulation dose	1.9×10^8 rad	5.0×10^8 rad
dpa rate in TF coil copper	1.64×10^{-12} s⁻¹	4.5×10^{-12} s⁻¹
Total dpa	9.0×10^{-5}	2.5×10^{-4}
Initial nuclear heating in dewar wall	0.71 mW/cm²	1.8 mW/cm²
Total neutron flux outside shield	4.4×10^3 n/cm² s	1.2×10^{12} n/cm² s
Operating biological dose rate outside shield	2.8×10^5 rem/h	7×10^5 rem/h
Neutron e-folding distance in shield	6.75 cm	
Heating e-folding distance in steel	4 cm	

[a]Assumes all (n,p) reactions in Ni occur in Ni 58.

[b]Assumes 0.7 duty, 0.25 availability, 10 calendar year operation.

104
-78)
R INDEX
(14 11/16 PHOTOMASTER (DOUBLE 4 1/16 x 11 5/8 COLUMN)
EDUCTION (FINISH SIZE 8 1/2 x 11 - DOUBLE 3 1/16 x 8 11/16 COLUMN)

and the interaction among the response mechanisms are unknown. The combined effects of neutron swelling and thermal creep, for example, have not been established.

Studies carried out to date nevertheless indicate that designs can be developed to accommodate the severe loading conditions encountered in a fusion reactor. The principal concerns are the component life and susceptibility to highly localized loading conditions. Research is needed to better characterize plasma conditions. In addition, the torus must be designed so that replacement of components can be easily and quickly accomplished. Ultimately, experience and data will lead to designs which are more typical of current power systems.

References

1. C. Sardella, *Oak Ridge TWS Program: Evaluation of a Secondary Vacuum Enclosure for TWS*, ORNL/TM-6725, Oak Ridge National Laboratory, Oak Ridge, Tennessee (November 1975).
2. B. Engholm, "Preliminary Radiation Criteria and Nuclear Analysis for ITF," paper to be presented at the Fourth ANS Topical Meeting on the Technology of Controlled Nuclear Fusion, King of Prussia, Pennsylvania, October 14-15, 1980.
3. M. A. Abdou, "Important Aspects of Radiation Shielding for Fusion Reactor Tokamaks," paper presented at the Fifth International Conference on Reactor Shielding, Knoxville, Tennessee, April 18-23, 1977.
4. T. J. Woods, "Design Review – PGFR Shielding," unpublished data, General Atomic Co. (March 1978).
5. R. L. Reid *et al.*, *Oak Ridge TWS Program: System Description Manual*, ORNL/TM-6721, Oak Ridge National Laboratory, Oak Ridge, Tennessee (May 1979).
6. D. Gilai *et al.*, "Optimal Iron-Water Shields for Fusion Reactors," paper presented at the Fifth International Conference on Reactor Shielding, Knoxville, Tennessee, April 18-23, 1977.

104
78)
INDEX
14 11/16 PHOTOMASTER (DOUBLE 4 1/16 x 11 5/8 COLUMN)
DUCTION (FINISH SIZE 8 1/2 x 11 - DOUBLE 3 1/16 x 8 11/16 COLUMN)