"The submitted manuscript has been authored by a contractor of the U.S. Government under contract No. DE-AC05-84OR21400. Accordingly, the U.S. Government retains a nonexclusive, royalty-free license to publish or reproduce the published form of this contribution, or allow others to do so, for U.S. Government purposes."

CONF-8610115--23

DISCHARGE CHARACTERISTICS OF A PLASMA GENERATOR FOR SITEX AND VITEX ION SOURCES*

C. C. Tsai, W. K. Dagenhart, W. L. Stirling, G. C. Barber, H. H. Haselton, P. M. Ryan, D. E. Schechter, J. H. Whealton
Oak Ridge National Laboratory, Oak Ridge, TN 37831

J. J. Donaghy
Washington and Lee University,
Lexington, VA 24450

CONF-8610115--23

DE87 005980

ABSTRACT

Surface Ionization with Transverse Extraction (SITEX) and Volume ionization with Transverse Extraction (VITEX) ion sources are being developed to produce intense beams of light negative ions for neutral particle beam applications. The salient feature of these ion sources is their ability to form intense negative-ion beams. With the objective of improving the performance of these sources, an experimental study of their plasma properties has been conducted. The effects of various electrodes in the plasma generator were investigated. Low electron and ion temperatures (below 1 eV) and positive plasma potential up to ~6 V have been measured. The measured distributions of plasma density and potential reveal the existence of multichamber characteristics in the source plasma. The significant discharge characteristics and the plasma properties associated with the performance of SITEX and VITEX ion sources are discussed.

*Research sponsored by the Department of Defense under Interagency Agreement DOE No. 40-1442-84 and Army No. W31RPD-53-A180 with the Office of Fusion Energy, U.S. Department of Energy, under Contract No. DE-AC05-84OR21400 with Martin Marietta Energy Systems, Inc.

MASTER

DISTRIBUTION OF THIS DOCUMENT IS UNLIMITED

INTRODUCTION

The two principal methods for producing H^-/D^- ions in ion sources[1-11] are surface conversion and volume generation. These negative-ion production mechanisms have been studied extensively, and recent reviews are available.[12-18] In a surface conversion source (such as the SITEX source), positive ions of the source plasma impinge on cesiated metal surfaces, where they backscatter and are converted into negative ion, or release negative ions from the converter surface. In a volume generation source (such as the VITEX source), negative ions are generated essentially by a dissociative attachment process in which vibrationally excited molecules collide with and attach to low-energy plasma electrons and are converted into negative ions via spontaneous dissociation. Normally the vibrationally excited molecules in an intense arc discharge are produced from molecules excited by energetic electron collisions and/or from molecular ions neutralized and excited by colliding with the arc chamber walls. In a plasma generator having molecules such as CH_4 and H_2, the production of H^- ions could also be effected by the process of polar dissociation.

EXPERIMENTAL ARRANGEMENT

Figure 1 shows the plasma generator, electrical connections, and setup for the plasma property study. The plasma generator for the SITEX and VITEX sources consists of a molybdenum-coated graphite arc chamber, one or two tantalum filaments , one converter, and one plasma grid.The applied uniform magnetic field (B_y) is parallel with the arc column between the filaments and is variable up to 6000 G. The arc collimation slots in this experimental setup are rectangular, with a 2.5- by 20-mm cross section and 20-mm length. The working gas, hydrogen or deuterium, is admitted into both collimation slots adjacent to the two filaments and also into the region behind the converter. Normally the plasma is studied during a discharge with constant applied magnetic field, continuous gas feed, and continuous filament heating. The

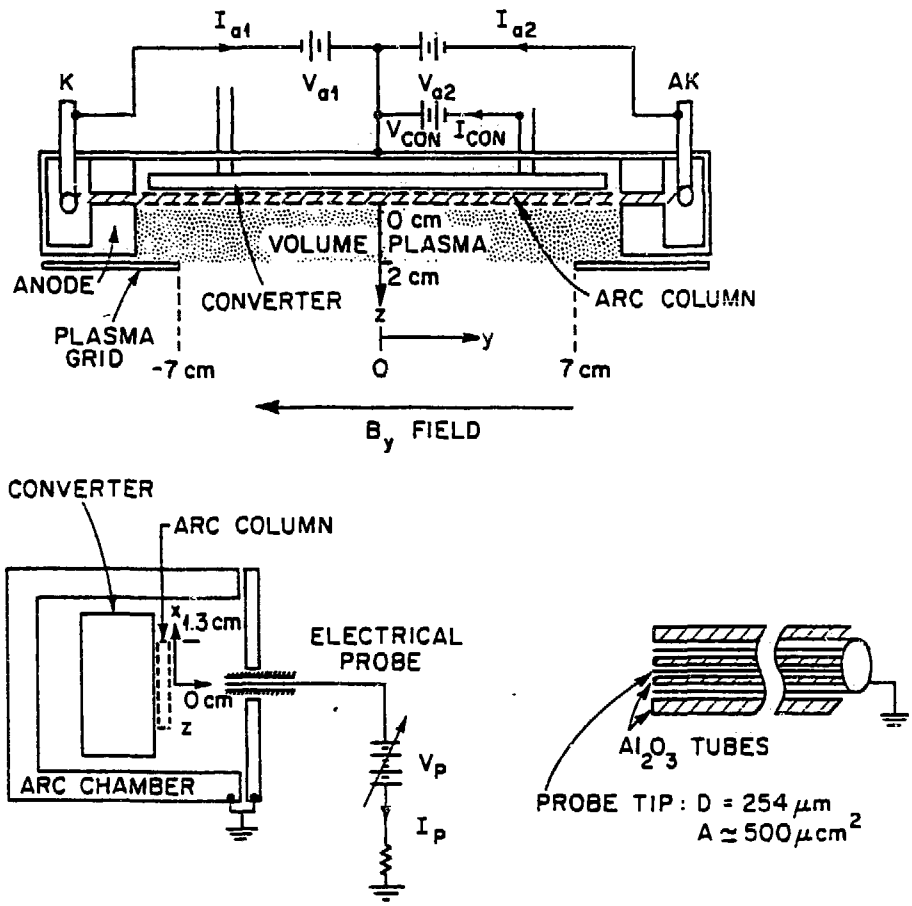

Fig. 1. Arrangement used to study plasma properties of SITEX and VITEX sources.

discharge is initiated by applying a pulsed negative potential to the filaments with the arc chamber at ground potential. An intense electron beam is formed by the primary electrons emitted from the hot filaments and accelerated through the collimation slots (which act as anodes). This beam ionizes the hydrogen gas to create an intense plasma in the arc column. The efficiency of electron ionization is improved by the reflection of energetic electrons at both ends of the arc column. Such a discharge is similar to the so-called Penning, PIG, and reflex discharges. However, a negatively biased converter works as a large ion collector and

can be used to control source plasma density. In addition, the secondary electrons emitted from the converter surface can enhance the discharge. Thus the converter voltage can be used to control the plasma density and plasma potential.

The conditions for each arc discharge are usually set by adjusting the arc voltage V_a, which is variable up to 200 V; the arc current I_a, which is variable up to tens of amperes; and the gas feed Q, which is variable up to 200 sccm. With a gas conductance of 100 L/s through the aperture of the plasma grid, the gas pressure in the source plasma is variable up to 20 mTorr. In addition, the filament heating current of about 300 A can be adjusted to control the arc current and hence the intensity of the arc discharge. Based on this experimental study, we observed that the arcs interact with each other and enhance the plasma density.

The plasma properties were measured using an electrical probe that can be scanned both parallel to the magnetic field (left-right) and perpendicular to the converter surface (in-out). The probe tip is 0.25 mm long and 0.25 mm in diameter. In some experimental studies, the probe tip is recessed into a ceramic tube housing with the objectives of minimizing the probe's disturbance of arc discharges and measuring local plasma properties. To facilitate studies of the plasma properties near the arc column, the probe was located by a scanner with a position resolution of 0.05 mm.

EXPERIMENTAL RESULTS

Under normal operations, each arc can be raised above 10 A. However, during this study the arcs were limited to 3 A to prevent the probe tip from melting. Figure 2 reveals that both arcs produce plasmas with similar density and uniformity. When both arcs are turned on simultaneously, however, the plasma density triples and the plasma nonuniformity increases. Depending upon the arc conditions, the plasma density and uniformity can be quite different from those shown in the figure. In fact, a floating hot filament can degrade the arc discharge of the other filament. A speculation to explain this observation is that the electron cloud of the floating hot filament partially shorts it to the

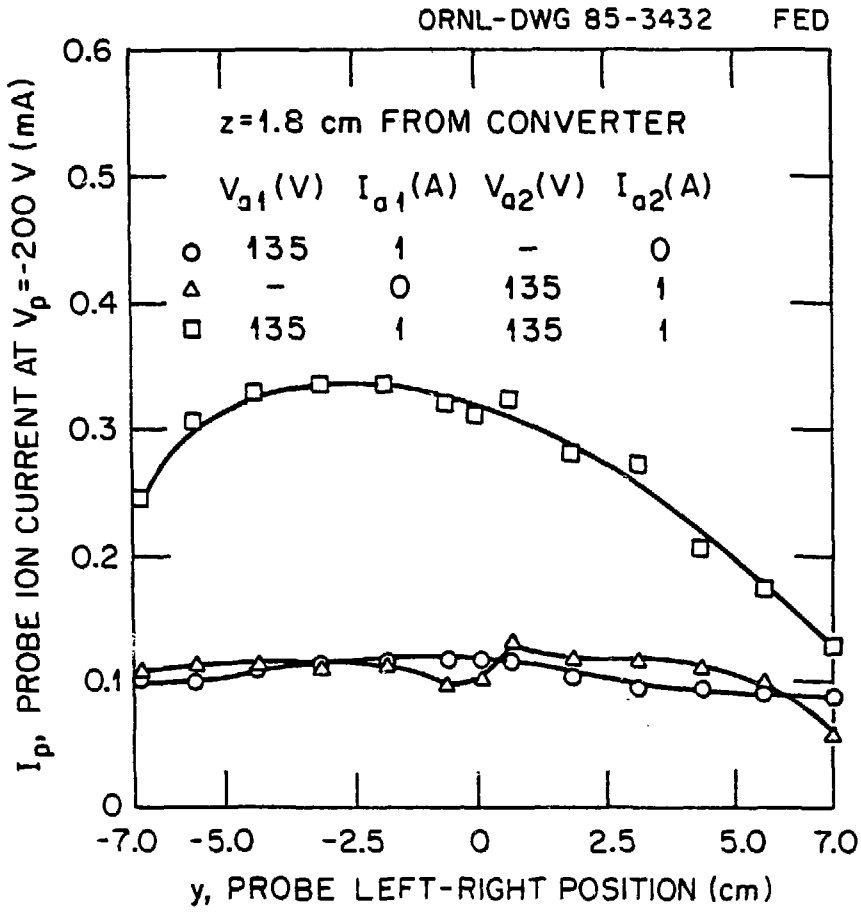

Fig. 2. Effect of arc discharge on plasma density and uniformity.

anode, making it unable to reflect the energetic electrons and weakening the discharge. We also note that the arc intensity can be maximized by optimizing the applied magnetic field and adjusting the gas feed.

Figure 3 shows a sharp decrease of plasma density away from the arc column toward the plasma grid. Here, z = 0 is the edge of the arc column. With a negatively biased converter, the measured plasma density decreases as the converter voltage increases. We also note that the plasma potential near the arc column is proportionally decreased. The measured electron temperature is below 1 eV, and the plasma potential is several volts positive in the region near the plasma grid. A

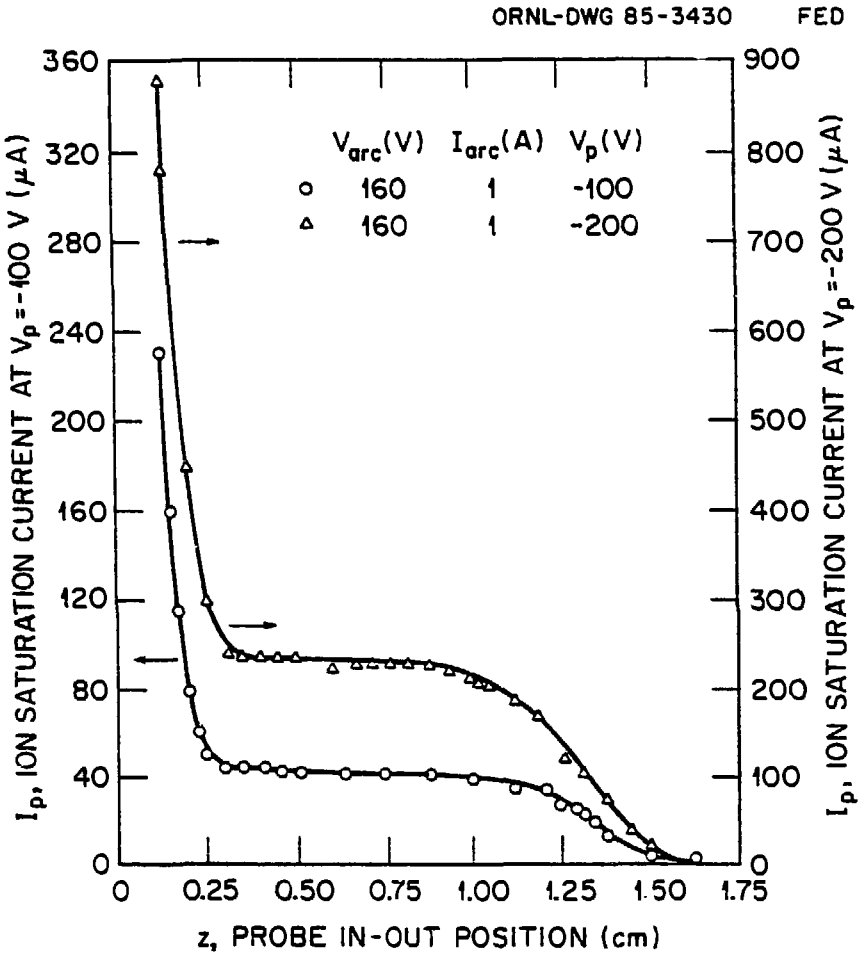

Fig. 3. Sharp variation of plasma density in the region near the arc column.

typical distribution of probe floating potential is shown in Fig. 4. This figure reveals that the floating potential near the arc column is always lower than the converter potential. For this particular experiment, the probe tip was not extended outside the ceramic tube. The ceramic tube could be charged by energetic electrons which impinged on the ceramic tube surfaces near the probe tip. These results suggest the existence of multichamber characteristics in the source plasma, which are useful for enhancing volume production of negative ions, as emphasized by Hiskes.[15]

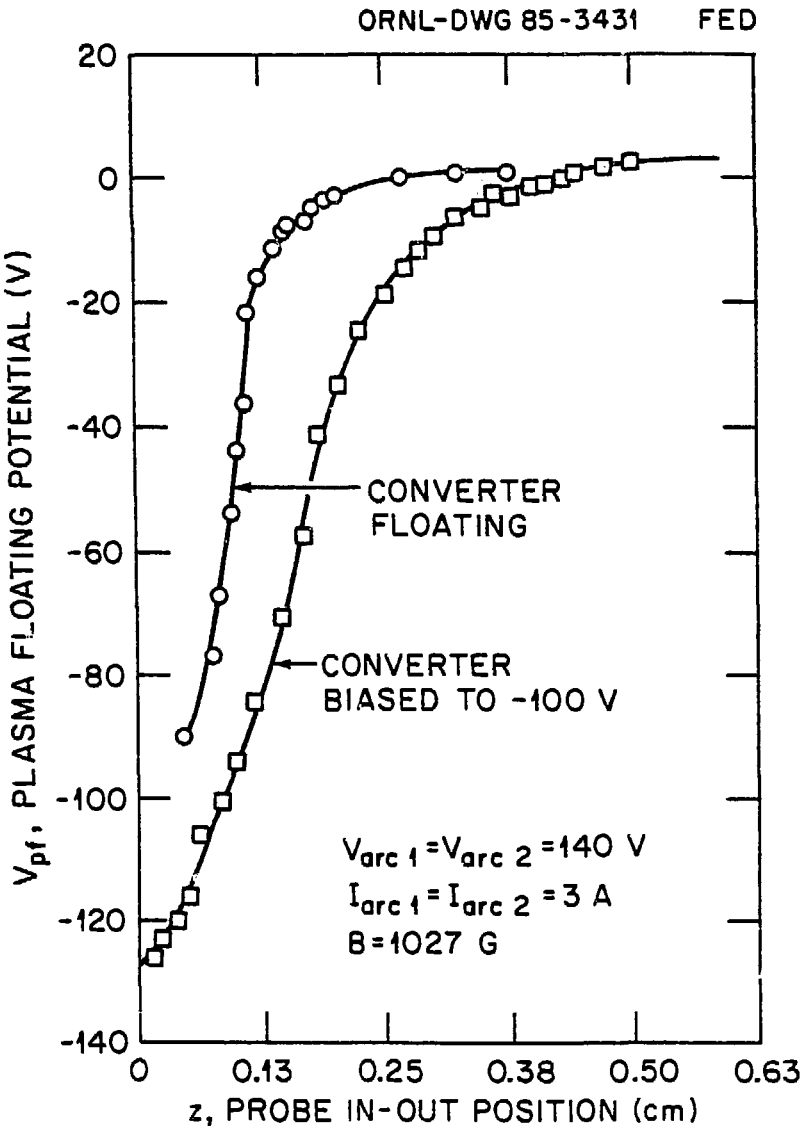

Fig. 4. The plasma floating potential in the region near the arc column.

DISCUSSION

Based on the potential distribution in the source plasma and on the energies of the primary and the plasma electrons, it should be possible to reach a high negative-ion production rate. However, the positive plasma

potential up to +6 V with respect to the plasma grid has been measured by both a hot and a cold electrical probe. Such a potential hill will make it difficult for the volume negative ions to be extracted. In order to increase the output of negative ions, we tested ideas for increasing either the transmission efficiency of volume negative ions toward the extraction region or the volume production rate in that region. One idea is to change the biasing potential of the plasma grid. We observed that the plasma floating potential changing by less than 2 V when the plasma grid potential is changed by 10 V. This reveals the shielding effect of the plasma sheath adjacent to the plasma grid. We observed that the plasma density was decreased slightly. However, we also observed that the negative-ion output increases about 10% as the plasma grid is biased negatively. Under such conditions, the volume negative ions should be repelled from the plasma grid and positive ions attracted toward the grid. Thus, the increase of negative-ion output may be due to the increase of the volume production rate in the extraction region. This observation suggests that the ions of the VITEX beams in these experiments are dominated by those created in the extraction region.

Based on Hiskes' hypothesis, the negative-ion production rate can be increased if the concentration of vibrationally excited molecules and low-energy plasma electrons can be increased. For the case with the plasma grid biased negatively, the molecular ions are attracted toward the plasma grid and converted into excited neutrals. Moreover, the electric field so established in the extraction region will increase the density of low-energy electrons. Thus, the observed increase of negative-ion output in that experiment reveals the important role of both the surface excitation and neutralization and the dissociative attachment processes in the VITEX source.

In an ion source, the current density of negative-ion beams will increase with the increase of the production rate and the decrease of the destruction rate. Usually the production rate is a positive function of the density of the excited molecules and the density of low-energy electrons. On the other hand, negative ions are destroyed by the processes of ion-ion neutralization collision and ion-atom associative detachment collision. Hence, in order to increase negative-ion output, the source has

to be operated under conditions that will increase the molecular species but decrease the atomic species. In the VITEX ion source, effective ways to achieve such desired operating conditions are to increase anode gas feed and decrease cathode gas feed, to increase the applied magnetic field, to bias the plasma grid negatively with respect to the anode, and to shorten the distance between the arc column and the plasma grid. Negative hydrogen ion beams of output current greater than 20 mA and with a current density above 120 mA/cm^2 have been successfully formed by applying such methods..

Another effort to increase H^- output of the VITEX source involved feeding heavy gases such as argon, helium, and CH_4 into the anode region. We observed that the H^- output only increases about 10% for argon and helium. However, with CH_4, the H^- output is comparable to that for a hydrogen gas feed. The highest H^- output was achieved when the cathode gas feed was turned off. At this earlier experiment, the source delivered 12 mA/cm^2 H^- beams from either CH_4 plasma or H_2 plasma. The fact that CH_4 could be used as a working gas for H^- production suggests that the process of polar dissociation[18] may contribute to H^- production in the VITEX source.

In a SITEX ion source, the cesiated converter surface is subjected to bombardment of positive ions of hydrogen and cesium. The negative ions are created essentially by surface conversion processes. However, as in a VITEX source, negative ions can also be created by volume generation processes. Comparison of the production rate of negative ions at the cesiated converter surface with that in the extraction region indicates that the negative ions of SITEX beams should be dominated by those originating from the converter surface. This statement is supported by the following experimental results. The negative-ion output increases with the converter bias potential. The maximum output can be quadruple that of a floating converter. Moreover, the temperature of SITEX ions is estimated from parallel emittance measurements to be about 5 eV, instead of about 0.5 eV as for the VITEX beams. Our experimental studies confirmed that SITEX sources are capable of producing long-pulse intense deuterium negative-ion beams with beam current density above 48 mA/cm^2 (Ref. 5).

ACKNOWLEDGMENTS

The authors wish to thank their colleagues for their assistance in keeping the test facility running: S. C. Forrester and F. Sluss for their work on the mechanical hardware of the facility, including ion sources, and B. E. Argo and D. O. Sparks for their work on power supplies and electronics.

REFERENCES

1. W. K. Dagenhart et al., "Short-pulse operation with the SITEX negative ion source," Proc. Third Int. Symp. on Production and Neutralization of Negative Ions and Beams: AIP Conf. Proc. **111**, 353 (1984).
2. W. L. Stirling et al., "Normalized emittance of SITEX negative ion source," Proc. Third Int. Symp. on Production and Neutralization of Negative Ions and Beams: AIP Conf. Proc. **111**, 450 (1984).
3. J. H. Whealton et al., "2-D accelerator deisgn for SITEX negative ion source," Proc. Third Int. Symp. on Production and Neutralization of Negative Ions and Beams: AIP Conf. Proc. **111**, 524 (1984).
4. W. L. Stirling et al., Volume H^- Generation with the SITEX Source in the VITEX Reflex Mode Without Cesium, Report No. ORNL/TM-9753, Oak Ridge, National Laboratory, 1986.
5. W. K. Dagenhart, C. C. Tsai, W. L. Stirling, P. M. Ryan, D. E. Schechter, J. H. Whealton, and J. J. Donaghy, these proceedings.
6. K. Prelec, "A Penning source for negative hydrogen ions," Nucl. Instrum. Methods **144**, 413-421 (1977).
7. K. T. Ehlers, Nucl. Instrum. Methods **32**, 309-316 (1965); K. Jimbo et al., Nucl. Instrum. Methods in Physics Research **A248**, 282-286 (1986).
8. M. Bacal et al., "Production of negative hydrogen ions in low-pressure hydrogen plasmas," pp. 26-34 in Proc. Symp. on Production and Neutralization of Negative Ions and Beams: Report No. BNL-50727, Brookhaven National Laboratory, 1977.
9. K. Leung and K. W. Ehlers, in Proc. Symp. on Production and Neutralization of Negative Ions and Beams: Report No. BNL-51304, Brookhaven National Laboratory, 1980; K. Leung and K. W. Ehlers, Rev. Sci. Instrum. **53**, 1423 (1982); **52**, 1452 (1981).
10. P. W. Allison, "Experiments with a Dudnikov-type H^- ion source," p. 119 in Proc. Symp. on Production and Neutralization of Negative Ions and Beams: Report No. BNL-50727, Brookhaven National Laboratory, 1977.
11. M. Bacal et al., "Progress in developing a volume D^- ion source," in Proc. 10th Symp. on Fusion Engineering, 1983 (IEEE, New York, 1984).

12. A. Pargellis and M. Seidl, "Formation of H^- ions by backscattering thermal hydrogen atoms for a cesium surface," Phys. Rev. B **25**, 4356-4361 (1982).
13. M. Seidl and A. Pargellis, "Production of negative hydrogen ions by sputtering absorbed hydrogen from a cesiated molybdenum surface," Phys. Rev. B **26**, 1-6 (1982).
14. J. R. Hiskes et al., "Generation of H^-/D^- ions on composite surfaces with application to surface/plasma ion source systems," J. Vac. Sci. Technol. **A2**(2), 670-674 (1984).
15. J. R. Hiskes et al, "Optimum extracted negative-ion current densities from tandem high-density systems," J. Appl. Phys. **58**, 1759-1764 (1985).
16. J. R. Hiskes et al., "Hydrogen vibrational population distributions and negative ion generation in tandem high hydrogen discharges," J. Vac. Sci. Technol. **A3**, 1229-1233 (1985).
17. A. M. Karo and J. R. Hiskes, "Vibrational relaxation in H_2 molecules by wall collisions: applications to negative ion source processes," J. Vac. Sci. Technol. **A3**, 1222-1228 (1985).
18. S. K. Srivastava and O. J. Drient, "Polar dissociation as a source of negative ions," Proc. Third Int. Symp. on Production and Neutralization of Negative Ions and Beams, AIP Conf. Proc. **111**, 56 (1984).