CONF-780508--37

By acceptance of this article, the publisher or recipient acknowledges the U.S. Government's right to retain a nonexclusive, royalty free license in and to any copyright covering the article.

NEUTRAL BEAM INJECTION STATUS AND R&D NEEDS FOR TNS*

W.R. Becraft** for the ORNL TNS Team

OAK RIDGE NATIONAL LABORATORY
OAK RIDGE, TENNESSEE 37830

MASTER

The Next Step (TNS) Program, established by DOE at ORNL in early 1976, has as one of its key objectives to provide a means of focusing the R&D efforts in the National Fusion Program toward the achievement of economically viable tokamak fusion reactors. One part of a draft program plan[1] issued in December, 1977, specifically addressed the R&D needs of each of the major subsystems of a tokamak fusion device that would be extrapolatable to a reactor. Included as a major subsystem was plasma heating.

It is the purpose of the effort reported here to continue the assessment started[1] and to update and expand its findings. The goal continues to be to define, justify and order the required R&D programs that would ensure neutral injection systems for heating tokamak plasmas to be available for a TNS-type machine operation start assumed to be in 1990. Particle injection is covered here. Wave heating is being addressed in a separate, parallel effort.

NOTICE
This report was prepared as an account of work sponsored by the United States Government. Neither the United States nor the United States Department of Energy, nor any of their employees, nor any of their contractors, subcontractors, or their employees, makes any warranty, express or implied, or assumes any legal liability or responsibility for the accuracy, completeness or usefulness of any information, apparatus, product or process disclosed, or represents that its use would not infringe privately owned rights.

INTRODUCTION

The usual approach to planning the required R&D for a major project that is to be completed some years hence is to:

1. Characterize the project in detail.
2. Note the technology and physics discrepancies between current capabilities and the project's real needs.
3. Define, cost, and schedule the timely R&D advancements necessary to remove those discrepancies.

This well-understood and often used, straightforward planning approach meets with particular difficulty with a TNS because of the relatively large number of uncertanties in basic physics and technology directions the machine design and operation may take. The task of recommending the appropriate R&D efforts to meet the needs of the TNS Project has, therefore, a number of potential variations in directions and can best be approached by using simple judgements of probabilities to highlight and order the most important advancements.

The steps herein used to arrive at the needed R&D are:

1. Develop the expectation probabilities for various neutral injection uses and characteristics.
2. Define the system and equipment availability and development status to meet the needs.
3. Identify, integrate, and schedule the required R&D to fill the gaps in neutral injection technology.

*Research sponsored by the Office of Fusion Energy, U.S. Department of Energy under contract W-7405-eng-26 with the Union Carbide Corporation.

**General Electric Company, Oak Ridge, TN 37830.

DISTRIBUTION OF THIS DOCUMENT IS UNLIMITED

STEP 1. DEVELOP EXPECTATION PROBABILITIES OF NEUTRAL INJECTION CHARACTERISTICS

The determination of neutral injection requirements must recognize the decreasing but still present uncertainties. Step 1 addresses this by assigning probabilities to the various needs and expected solution path for each criterion or pertinent question. The resulting array of probabilities will serve as guides to the ordering of the necessary R&D efforts.

The array construction is started by assuming neutral injection will be used on a TNS device by assigning it a probability of 1.0 (see Figure 1). A logical first question is, "Is it expected that neutral beams will be used for heating and fueling, heating only, or fueling only?" Recent investigations of injection heating scenarios[2,3,4,5,6] indicate a low prospect for fueling only by neutral beam injection, and thus that answer is given a very low expection probability (0.05) of being realized on a TNS machine. The question of beams to fuel, or to fuel and heat[2,3] recognizes that some fueling accompanies the beam heating but, at the beam energies desired, it is probably a secondary consideration. It is assumed here that the attendant fueling will become a trivial consideration at beam energies above 150 keV/deuteron. Injection strategies being developed[2,4] offer promise of adequate application of neutral beams with energies about 150 keV/deuteron. A comparison[7,8,9,10,11,12,13] of the efficiencies of neutral beam systems with positive ion sources with those efficiencies projected for systems using negative ion sources shows that this energy level is in the range where the two systems have comparable performance. Thus, 150 keV/deuteron was taken as a demarcation energy value in constructing the array of expectation probabilities and shows throughout the array as a criterion for action choice. Another energy could be selected as the criterion and the array constructed in the same way -- but the expectation probabilities would then be judged to have different values.

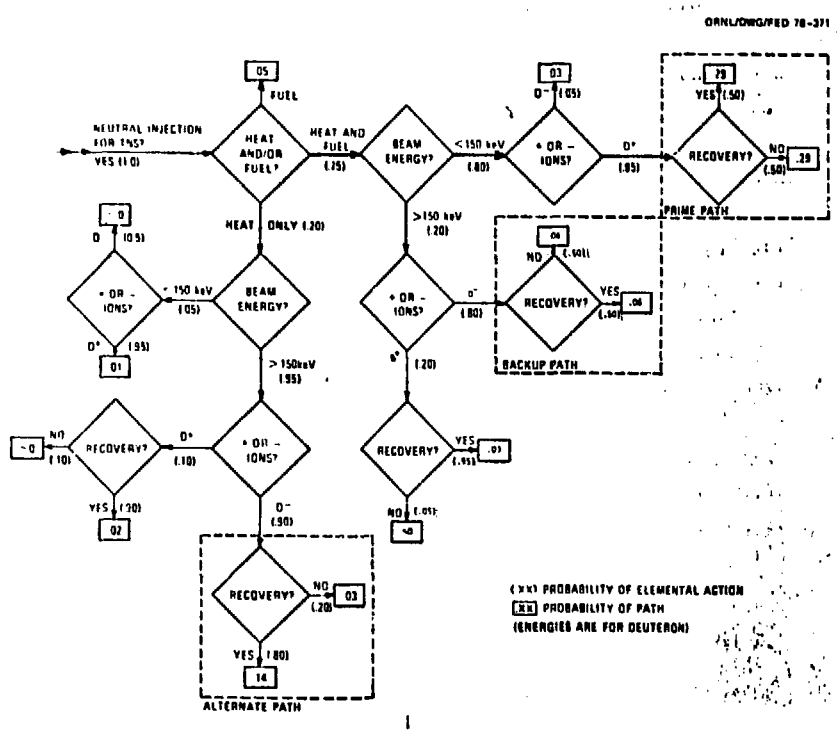

FIGURE 1. Expectation probabilities of neutral injection characteristics for TNS

The sequence of questions chosen pertains to energy level first, negative vs positive ion sources second, and the use or non-use of direct energy recovery third. A different sequence could be used with little impact on the resulting observations.

The expectation probabilities of the use of "+ or -" ion sources result primarily from a consideration of the efficiencies projected for beam systems.[7,8,10,12,13]. The power efficiencies of beams with 150 keV/deuteron are expected to be about 20% with positive ion sources based on calculations, developments, and ORMAK[14] and PLT[15] operating experience. The efficiencies projected for negative ion based systems as extrapolated from the early developments are calculated to be greater[13]. The development of negative ion beam systems appears to be at least five years behind that of positive ion beam systems[7,8,10,12,15,16] and, within the TNS (and upgrades) expected construction and operation schedules, it seems unlikely that the realized power efficiencies for large beam lines operating at 150 keV/deuteron will much surpass those for positive ion systems.

The third key question in the sequence deals with direct energy recovery. In the 100- to 300-keV/deuteron energy range, one should consider the application of direct energy recovery with its potential to increase base power efficiency of either the positive or negative ion source beam system[12,13]. If energies exceeding 300 keV/deuteron are needed (assuming only atomic species), the divergence in the power efficiencies of the two systems is projected to be so great as to preclude serious consideration of applying positive ion based systems even with direct energy recovery. The judgements that derive (Figure 1) from these considerations point to a very high expectation that direct recovery would find early use with positive ion based beams with Eb > 150 keV/deuteron, a lesser value for negative ion based beams with the same range of energies, a 50% probability for positive systems with 100 $\leq$ Eb $\leq$ 150 keV/deuteron, and a very low probability for negative systems with Eb < 150 keV/deuteron.

In developing Figure 1 there appear from comparing the probabilities a prime path, a backup path, and an alternate path on each of which one could describe and base a necessary and supporting R&D program. It should be noted that a necessary R&D element would not be related <u>only</u> to one path. Therefore, it seems prudent to consider the number of times and with what expectations a particular R&D requirement shows and factor that into an ordering of the most needed elements. For example, direct recovery shows in many paths and would, therefore, warrant more support for its development for potential TNS use than an area with less universality of application. A quick estimate of its potential use on a TNS device can be obtained by adding the "Recovery?-Yes" probabilities which give 0.50. Negative ion systems give an expectation probability of 0.24 whereas positive ion systems show 0.73. These indicators will undoubtedly change as further analyses are devoted to the comparisons and as important advances are made in the science and technology; however, it is expected that this method of using expectation probabilities will still be useful and can easily adapt to new judgements.

STEP 2. <u>DEFINE STATUS OF THE SYSTEM AND EQUIPMENT DEVELOPMENT AND AVAILABILITY TO MEET THE NEEDS</u>

The preceding (Step 1) dealt with the physics of injectors and the probabilities of use of various options on a tokamak. This Step 2 attempts to address the state of readiness of the major hardware elements of these options and to, thereby, show where added attention is needed to obtain the required reliability, maintainability and producibility for a TNS application[17,18,19].

The key elements of the neutral injection system (only five chosen to start) must be evaluated as to their potential status and readiness for being produced efficiently and providing cost effective and reliable operation.

The key elements selected (see Figure 2) are:

1. Ion source
2. Power supplies
3. Vacuum components and pumping
4. Control and diagnostics
5. Direct recovery

The source is further divided into two options, e.g., an H^+,D^+ source and a H^-,D^- source. The power supplies seem "lumpable" into two groups: supplies for arc and source, and supplies for particle acceleration. Vacuum components and pumping include all mechanical portions. The controls and diagnostics were considered to be of equal importance with the other elements, especially in the context of multiple injection operation. Direct recovery, which may play a key role in the negative-positive eventual selection, is also deemed important enough for separate evaluation.

A word about the status descriptors used:

- Development refers to the state of scientific and technical feasibility. If the element has been proven feasible and is usable in its near-final technical concept in tokamak experiments, the development status should be excellent and rate a 1. A 2 here could indicate further development is needed as with the H^+ source to achieve higher current levels. A 4 for a H^- source says that although some of the H^+ feasibility and demonstration is applicable for negative ion systems, significant basic R&D is still required.
- Producibility includes the aspects of how ready and suitable the design concept is for detailed design and

ORNL/DWG/FED 78-372

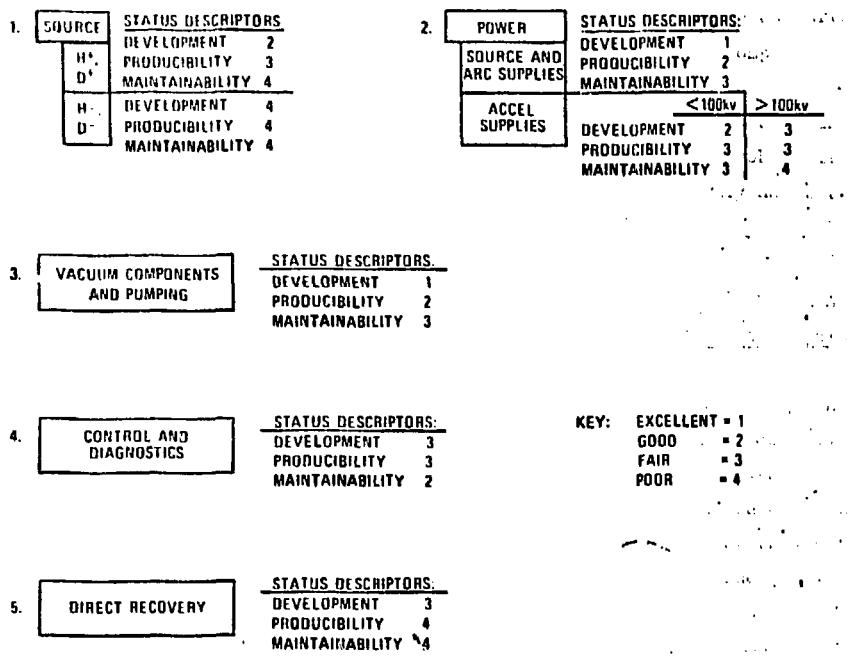

FIGURE 2. Status of neutral injection system elements

quantity fabrication of a reliable device.

- Maintainability is primarily directed at how well it is expected that the potential design concept could be assembled and disassembled in the remote installation and maintenance dictated by TNS operation.

These status descriptors are general and therefore somewhat overlapping. However, it is felt that they can serve as an aid to an orderly consideration of the yet unsolved problems and that they will assist the attainment of a relative comparison of the importance of the development needs.

The assignment of numbers to the perceived status gives some additional help in relative comparisons. For example, it is suggested that these be used as "multipliers" of the previous probabilities to aid any overall ranking that one might undertake.

STEP 3. IDENTIFY, INTEGRATE, AND SCHEDULE THE REQUIRED R&D

Some key development needs that appear necessary from the preceding and from other studies and considerations include[12,13]:

- Source development for higher current, longer pulse, species control, and higher energy with positive ion sources.
- Direct recovery techniques -- especially for positive ion systems.
- Plasma engineering techniques to reduce the required particle energy level (small radius and/or low density start-ups, ripple injection, etc.).
- Source development for negative ions -- same performance as for positive ions.
- Controls and diagnostics for multiple beam systems.
- High voltage (> 150 kV) power supply development.

And, it seems evident that an increased effort or new effort is required in seriously considering how these elements and the system can be developed to be simpler, cheaper, and more reliable, producible and maintainable. Such an activity would be very valuable in providing active feedback to the development and conceptual design efforts. If deuteron beams at energies ∿ 150 keV would be adequate for TNS, such maintainability programs would constitute the major effort remaining to provide neutral injection.

An example of such a schedule is shown in Figure 3. Here it is assumed that a TNS tokamak would be scheduled to begin operation in early FY 90. Using schedules from other large programs as guides, a six-year period is shown as necessary for completion of the design to turn-on activities. At the beginning of such a major ($.5B to $1.0B) project the confidence level in the state of development of the program subsystems has to be high -- like the confidence level one would gain from a dedicated qualifying program. Such a "qual program" could entail two-three years when one includes all the design and procurement of subsystems and when most will be required to be proven on test tokamaks where the environment is near that expected on TNS. Only then does it seem likely that such a large program would receive final approval.

The resulting schedule shows the development period available is forty months, after which a detailed design must be started for a system to be qualified on machines such as the proposed Long Pulse Technology Tokamak (LPTT). The imposition of this schedule does not appear to jeopardize the attainment of the neutral injection priority R&D goals if an aggressive program is started and maintained. The emphasis must be on positive ions for two reasons: (1) the prevailing physics shows promise that beam energies > 150 keV will not be required on tokamaks[1,2,3,4,12], and (2) there is little

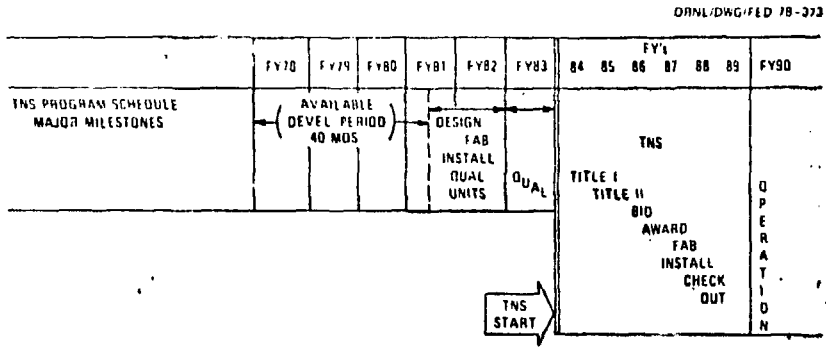

FIGURE 3. Preliminary TNS schedule milestones

probability that negative ion systems can be developed adequately in 40 months[8,12] (see Figure 4b) based on the schedules presented at the December 1977 Plasma Heating Workshop. The development and use of direct recovery seem very desirable and could result in considerable savings in TNS power supply costs.

Additional savings could accrue from beam energy and species control, multiple beam control and instrumentation, reliability improvements and the resulting increase in TNS effective operation time.

Supporting R&D in physics must be pursued vigorously. These supporting activities are required to increase the present confidence that startup-injection scenarios are available which reduce the need for > 150 keV beams. Such experiments as small radius startup, low density startup, ripple injection, and the important plasma calculations need priority support.

Preliminary scheduling of the R&D that appears necessary for TNS is attempted in Figure 4. This effort shows, for example, the difficulty of fitting negative ion source systems into the assumed TNS time frame. In fact, it shows, based on the aforementioned schedule assumptions, the difficulty of planning with confidence any new physics on TNS that hasn't already passed feasibility demonstration and been tested on an experimental tokamak.

ACKNOWLEDGEMENTS

The author is particularly indebted to H.H. Haselton, Y-K.M. Peng, M. Roberts, J.A. Rome, J. Sheffield, and D. Steiner for their encouragement, guidance, and critical reviews.

OBSERVATIONS

This type assessment should prove useful in many aspects of the iterative process of defining and planning major programs. Some of the intuition and judgements can be more logically considered.

Some salient observations from this particular neutral injection study include:

1. TNS neutral injection needs would probably be met with positive ions with energy levels ∿ 150 keV.
2. An aggressive support of the positive ion R&D is required (> 30%/yr growth separate from project funding).
3. Special plasma calculations and experiments should be accelerated to confirm and detail the injection scenarios.
4. Attention to reliability, remote maintenance, cost, and simplicity should be obtained by an ongoing study.
5. Negative ion systems, if needed at all for tokamaks, would be no earlier than a TNS-Upgrade application because they are probably five years behind positive ions.

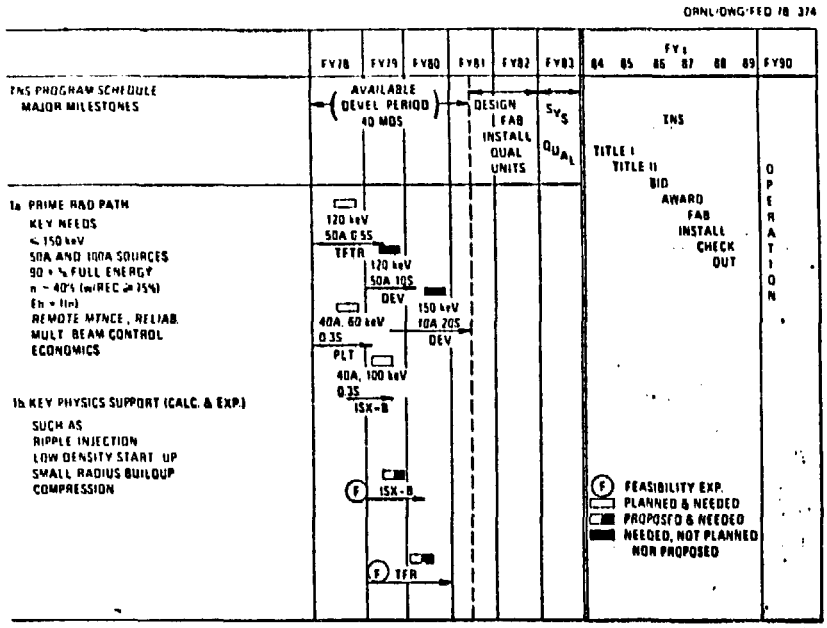

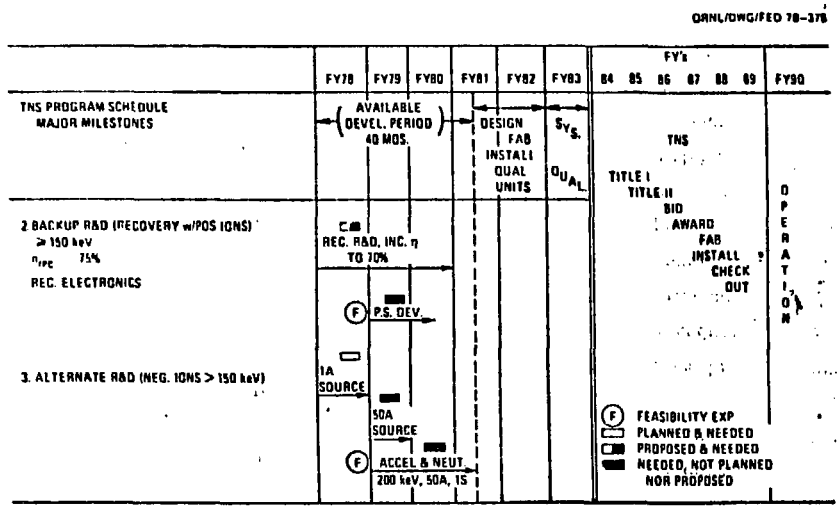

FIGURE 4. Key TNS neutral injection R&D needs as bounded by TNS preliminary schedule

REFERENCES

1. Oak Ridge TNS Program Staff, "Draft Program Plan for TNS -- The Next Step After the Tokamak Fusion Test Reactor, Part II-R&D Needs Assessment," ORNL/TM-5983 (December 1977).
2. J.A. Rome, "Beam Penetration -- Theory and Predictions," presented at Workshop on Fueling, PPPL, October 1978, to be published in Proceedings by DOE.
3. J. Sheffield, private communications, 1977, 1978.
4. J.A. Rome, Y-K.M. Peng, J.A. Holmes, "Injection Heating Scenarios for TNS," ORNL/TM-5931 (July 1977).
5. Y-K.M. Peng, S.E. Attenberger, W.A. Houlberg, A.T. Mense, J.A. Rome, N.A. Uckan, "ORNL TNS Program: Plasma Engineering Considerations and Innovations for a Medium Field Tokamak Fusion Reactor," ORNL/TM-6150 (December 1977).
6. M. Roberts, "Draft Program Plan for TNS -- The Next Step After Tokamak Fusion Test Reactor," Part I-Summary," ORNL/TM-5982.
7. H.H. Haselton, "Positive Ion Systems -- State of the Art and Ultimate Potential," presented at Workshop on Plasma Heating Development Requirements, Gaithersburg, MD, December 5-7, 1977.
8. Th. Sluyters, "BNL High Energy Neutral Beam Development Plans," presented at Workshop on Plasma Heating Development Requirements, Gaithersburg, MD, December 5-7, 1977.
9. R. Moir, "Positive Ion Systems with Direct Recovery," presented at Workshop on Plasma Heating Development Requirements, Gaithersburgh, MD, December 5-7, 1977.
10. B. Pyle, "LLL/LBL Negative Ion Development Program Plans," presented at Workshop on Plasma Heating Development Requirements, Gaithersburg, MD, December 5-7, 1977.
11. Y-K.M. Peng and J.A. Rome, "ORNL-TNS/PEPR Overall Heating Requirements," presented at Workshop on Plasma Heating Development Requirements, Gaithersburg, MD, December 5-7, 1977.
12. J. Sheffield, D.L. Jassby, L.D. Stewart, "Summary Statements," presented at Workshop on Plasma Heating Development Requirements, Gaithersburg, MD, December 5-7, 1977.
13. L.D. Stewart, "Comparison of Methods for the Production of Neutral Beams," to be published in Proceedings of Symposium on the Production and Neutralization of Negative Hydrogen Ions and Beams, September 26-30, 1977, BNL, Upton, NY.
14. O.B. Morgan, et al., "The Development and Application of Neutral Injection for ORMAK," Proc. 3rd Symposium on Plasma Heating in Toroidal Devices, Varenna, Italy, September 6-17, 1976.
15. H.H. Haselton, et al., "Neutral Beam System for the Princeton Large Torus," Conference Record for the IEEE 1977 International Conference on Plasma Science, Troy, NY, May 23-25, 1977.
16. J.P. Girard, M. Khelladi, D.A. Marty, Nuclear Fusion 13, 685, 1973.
17. PLT Neutral Beam Injection System Study Report, General Electric Company, September 1977. (Prepared for Union Carbide Corporation Nuclear Division.)
18. PLT Neutral Beam Commercial Producibility Study, Summary, General Dynamics-Convair Division, September 1977. (Prepared for Union Carbide Corporation Nuclear Division.)
19. P.A. Willis, private communications, 1977.
20. D.L. Jassby, Nuclear Fusion 17, 309 (1977).
21. D.R. Cohn, D.L. Jassby, K. Kreischer, "Neutral Beam Requirements for Compression-Boosted Ignition Tokamak Plasmas," PPPL-1405 (December 1977).