CONF-780718--1

By acceptance of this article, the publisher or recipient acknowledges the U.S. Government's right to retain a nonexclusive, royalty-free license in and to any copyright covering the article.

DEVELOPMENT AND TESTING OF TOROIDAL FIELD SUPERCONDUCTORS FOR FUSION DEVICES*

W. A. Fietz, J. W. Lue, and J. R. Miller

Oak Ridge National Laboratory, Oak Ridge, Tennessee, 37830 U.S.A.

MASTER

Superconductors rated at 10-16 kA in a magnetic field of 8 T are being designed, manufactured, and tested in cooperative development programs between Oak Ridge National Laboratory (ORNL) and conductor manufacturers. Conductor specimens based on ideas previously submitted by the manufacturers were fabricated and tested along with others designed and fabricated at ORNL. The tests measure short sample currents, stability, pressure drop, and heat transfer. Conductor parameters include strand size, cable configuration, superconductor distribution within the conductor, and compaction.

INTRODUCTION

Early in the Oak Ridge program for development of superconducting tokamak devices it was realized that the toroidal field (TF) coils would require conductors different from any that had been manufactured previously. Appropriate specifications were developed and several conductor configurations proposed and analyzed [1]. Using these specifications as a basis, a number of contracts were prepared for joint conductor development by ORNL and conductor manufacturers [2,3]. Under these contracts, conductor designs would be jointly prepared, and specimens would be manufactured for test and evaluation at ORNL. Results of these evaluations would be used to improve the design by optimizing the parameters which were varied in the test specimens.

NOTICE

This report was prepared as an account of work sponsored by the United States Government. Neither the United States nor the United States Department of Energy, nor any of their employees, nor any of their contractors, subcontractors, or their employees, makes any warranty, express or implied, or assumes any legal liability or responsibility for the accuracy, completeness or usefulness of any information, apparatus, product or process disclosed, or represents that its use would not infringe privately owned rights.

At the present time these development contracts are well under way and a number of test specimens have been received by ORNL. This paper gives details of the test program, the conductor specimens, and the parameters which have been varied, along with preliminary test results on these specimens.

DEVELOPMENT AND TEST PROGRAM

The conductor development work at ORNL is closely tied to the Large Coil Program (LCP) [4] although not really a part of the LCP Program. Thus the conductors under test are similar and in some cases prototypical of the conductors proposed by the American participants in LCP. The purpose of the conductor development and testing, however, is to evaluate and optimize conductors for long-term future tokamak applications as well as to provide immediate engineering data for LCP.

(a) Basic conductor types

The two major conductor types being currently investigated are pool boiling conductors in liquid helium at atmospheric pressure and forced flow type conductors operated at

*Research sponsored by the Office of Fusion Energy (ETM), U.S. Department of Energy under contract W-7405-eng-26 with the Union Carbide Corporation.

DISTRIBUTION OF THIS DOCUMENT IS UNLIMITED

pressures above the critical point of helium. These conductors are more specifically described below and summarized in Table 1.

TABLE 1: SUMMARY OF TF CONDUCTOR SPECIMENS RECEIVED OR ON ORDER BY ORNL

Reference Figure	Conductor Type	Variable Parameters	I_c kA at Tesla	No. of Specimens	Received as of June 1978
1	Pool boiling 11 subelement	Superconductor location: in or out; Core material: copper or steel; Cable pitch: 10° or 15°	14/8	6	6
2	Pool boiling 7 element	Core material: copper or CuNi/copper	13/8	2	2
3	Pool boiling compacted cable	Cable size		3	
4	Forced flow 19 x 3 x 1 mm Cable in conduit	Superconductor: NbTi or Nb_3Sn; Superconductor distribution; Strand insulation; Solder impregnation	8/7	8	8
5	Forced flow 6 x 3 x 3 x 3 x 0.73 mm plus core	Superconductor: NbTi or Nb_3Sn; Conduit shape: round or square; Compaction: 40-60% void; Strand insulation; Core material	7/7 20/8	13	9
5	Forced flow 6 x 3 x 3 x 3 x 3 x 0.73 mm plus core	Core size	60/8	2	0
6	Forced flow 37 x 7 x 0.56 mm with steel wrap	Superconductor distribution Compaction Cable twist length	9/6	7	0
7	Forced flow with external heat exchanger	Channel design	10/6	2	0

Pool boiling types. The conductor shown in Fig. 1 is closely related to the one proposed by General Electric Company for their LCP design. The variation of parameters for this program includes placement of the superconductor in the subelement, the cable pitch, and the core material. Dimensions of the conductor are held constant. The subelements are cabled about the core in either of two orientations as shown, with the superconductor against the core or away from the core. Two cable element pitch angles, 10° and 15°, were used to vary the helium cooling channel length, and core material is either oxygen free high conductivity (OFHC) copper or 304 stainless steel. A total length of 600 m of this conductor has been delivered containing all the above variations.

A second pool boiling conductor is the seven-element compacted cable shown in Fig. 2. Specimens have been obtained with two different core materials, OFHC solid copper or a segmented core which contains four quadrants of OFHC copper separated by webs of

Equation Numbers

copper nickel to reduce ac losses. Enough material has been received to make a 600 m length of the completed seven-element conductor.

The third pool boiling conductor to be evaluated in this program is a prototype of the LCP conductor proposed by General Dynamics/Convair. Figure 3 shows the completed conductor as will be used for LCP. The scope of the test program at present is limited to testing of the compacted cable which is inserted into the copper stabilizer.

Forced flow types. Specimens for the first of the forced flow conductor tests are shown in Fig. 4. These three NbTi conductors are virtually identical in all respects except for the distribution of the superconductor within the cable strand. All cables are made up of nineteen sets of three strands (triplets) in a standard cable configuration. Each of the triplets contains a small insulated heater for applying energy to study stability properties. In the first, the superconducting filaments are uniformly distributed throughout the cable, relatively near the center of the strands. In the second, the same amount of NbTi is incorporated in two-thirds of the strands with the other one-third being pure copper. Each of the primary triplets contains one copper and two composite strands. In the third conductor of Fig. 4, the distribution of superconductor is all in the outer twelve triplets with the inner seven made up of pure copper. Experiments will show the effect of superconductor distribution on recovery from a heat pulse.

The second of the forced flow conductor types consists of a number of subsized and full-sized prototypes of the conductor proposed by Westinghouse for their LCP coil, Fig. 5. The conductor is made up by cabling first a triplet, i.e., three conductors twisted about each other. Successive cabling operations on these triplets then lead to the penultimate unit, a hierarchy of triplets described as 3^N, where N is the number of tripleting steps to that point. The final conductor is obtained by cabling six of these units about a central core, which may either be a superconductor or some other material. In order to maintain a high degree of transposition, this core will probably be copper in the LCS coil. Subsize cables, one-third the scale of LCP, have been prepared by simply omitting one of the tripleting steps. These subsize specimens have been made with varying degrees of compaction resulting in void fractions of 40, 50, and 60%. Other variations are round vs square, NbTi vs Nb_3Sn, and core material and size.

Figures 6 and 7 show two other variations on forced flow conductor configurations. Specimens fabricated following the basic design of Fig. 6 will also encompass variations in the distribution of superconductor and in the degree of compaction of round and square conduits. The conductor of Fig. 7 shows a modification in which the heat exchanger contains only copper strand elements. Two of these channels flank the superconductor on either side, allowing placement of the superconductor on the neutral bending axis. Such an arrangement might be especially suited to using Nb_3Sn as the superconductor. Sections of the channel have been received for pressure drop tests, and full-scale conductor specimens are being manufactured.

(b) Testing facilities

Short sample test facility. As prototype and production conductor samples are produced, they will be tested to critical current in background field up to 8 T using the split solenoid and the test probe shown in Fig. 8. The split solenoid features iron pole pieces in the 150-mm bore for higher, more uniform field, and has a 48-mm radial access hole to accept the probe. The probe is based on a pair of 20-kA optimized vapor-cooled leads and is designed to allow the "hairpin" sample to be rotated relative to the background field. The restoring torque of the sample (when the sample self-field is not aligned with the background field) is resisted by locking the "tail" of the probe to the magnet structure by a "slot-key" arrangement. The tail itself is fabricated from a bar of 21-6-9 high strength stainless steel.

Field at the sample will be continuously monitored with cryogenic linear Hall effect transducers.* Sample current is supplied by a 20-V, 30-kA dc power supply.**

Pressure d[illegible] flow measurement facility. An important part of the investigation of forced [illegible] conductors is the measurement of pressure drop across a length of cable necessary to achieve a given flow rate of the supercritical helium. This measurement directly reflects the pumping power that will be required to provide a given stability margin when the conductor is wound into a coil. The apparatus used to perform such measurements is pictured schematically in Fig. 9. The test section will accommodate samples to 6 m in length. Sample cooling is accomplished with a blowdown system in which helium gas flow from high pressure storage bottles is cooled by a set of countercurrent and bath-cooled heat exchangers before induction into the sample cable. Flow control and measurement are done on the exhaust which has been warmed back to room temperature. Differential and absolute pressure measurements are performed with the help of capillary tubes connected to the test cable at each end.

High current leads (capable of carrying several hundred amps steady state and about 1000 A pulsed) are also brought into the test region for connection to the sample. Passing a current through the test conductor allows a determination of the average conductor surface temperature directly by a measurement of its resistance. Heat transfer data is obtained by heating the test conductor with high current while monitoring resistance for a simultaneous measurement of conductor surface temperature and input power.

Forced flow stability apparatus. Forced flow conductor samples that are small enough in cross section to be coiled with 100-mm-bend radius are tested in the apparatus represented schematically in Fig. 10. In this apparatus, the test conductor is positioned in the annular region between two coaxial superconducting pulse coils which are connected in series opposition to minimize inductance and reaction with the external field. The test conductor is heated suddenly and uniformly by rapid dumping of the energy which has been stored in the pulse coils by a slow charge (dump rates are typically 10-100 ms). Compensated pickup coils wound inside and outside of the region occupied by the coiled sample are used to measure the amount of energy deposited into the sample. The ability to recover from such heat inputs is determined for various set values of background field to 6 T, transport current to 9 kA, and helium flow rate to 1 g/s. Helium flow is provided through a blowdown system similar to that used for pressure drop vs flow measurements.

(c) Test results

Test results to date are confined exclusively to pressure drop measurements on forced flow conductors. The high current facility which will provide up to 30 kA at 20 V will be in operation upon completion of the bus from the supply to the test dewar, sometime in July 1978. Stability measurements on forced flow conductors are being performed but test results are not available at present.

Pressure drop measurements. Pressure drop measurements on several subsized forced flow cable conductors have been performed. Preliminary data showed the following general features:

1. The friction factor versus Reynolds number curve showed no apparent break for laminar flow to turbulent flow transition.
2. All friction factors measured for the cables are higher than that of the smooth tubes by as much as a factor of four at Reynolds number of 5000.
3. There is very little scattering of the data on each cable for helium temperatures from 300 K down to 77 K. Comparison of individual data

---

*From Lakeshore Cryotronics, Model LHGT-321.

**From Transrex Division of Gulton Industries, Torrance, California, U.S.A.

showed that cable conductor with different compaction gives different friction factors. A 7 x 3^3 strand cable with 40% void gives 40% higher friction factor than one with 61% void. Conductor of the same cable pattern and same compaction but different constituents also showed quite different friction factors. A 19 x 3 strand cable with each triplet consisting of two superconductors and one copper bare wire showed a 70% higher friction factor than one with each triplet consisting of identical insulated superconducting wires. These data are shown in Fig. 11.

CONCLUSIONS

Although the full test data on the conductor specimens are not yet available, a number of valuable conclusions can be made at this time. First of all, the production of the specimen conductors has uncovered fabrication difficulties which have been overcome by design changes [2] or by more control of manufacturing processes. This information has provided valuable inputs to the Large Coil Program already. Secondly, the data on pressure drop has apparently shown that the characterization of a forced flow cable by its hydraulic diameter is not sufficient. As more data are obtained it will be possible to determine to what extent modifications of the analyses of these conductors can and must be made.

ACKNOWLEDGEMENTS

The authors wish to extend their appreciation to the conductor manufacturers for their cooperation and valuable contribution to the conductor designs and analyses, and to L. Alley, Jr., C. M. Fitzpatrick, J. P. Rudd, and W. H. Wagner for their assistance in setting up and operating the conductor test apparatus.

REFERENCES

1 Fietz, W. A., "High Current Superconductors for Tokamak Toroidal Field Coils," IEEE Transactions on Magnetics, MAG-13 (1977), pp. 807-810.

2 Zeitlin, B. A., Walker, M. S., Heinrich, J. P., and Fietz, W. A., "An Integrated Composite Conductor for the LCS Program," Proceedings of the 7th Symposium on Engineering Problems of Fusion Research, Knoxville, TN, October 25-28, 1977, pp. 1273-1277.

3 Fietz, W. A., "Conductors for Tokamak Toroidal Field Coils," ibid, pp. 1278-1281.

4 Haubenreich, P. N., Luton, J. N., and Thompson, P. B., "Procurement and Testing of Superconducting Toroidal Field Coils in the Large Coil Program," ibid, pp. 916-919.

5 Hoenig, M. O., Iwasa, Y, Montgomery, D. B., and Bejan, A., Paper I9 in Proceedings of the 6th International Cryogenic Engineering Conference, Grenoble, France, IPC Science and Technology Press (1976), pp. 310.

ORNL/DWG/FED-77757R

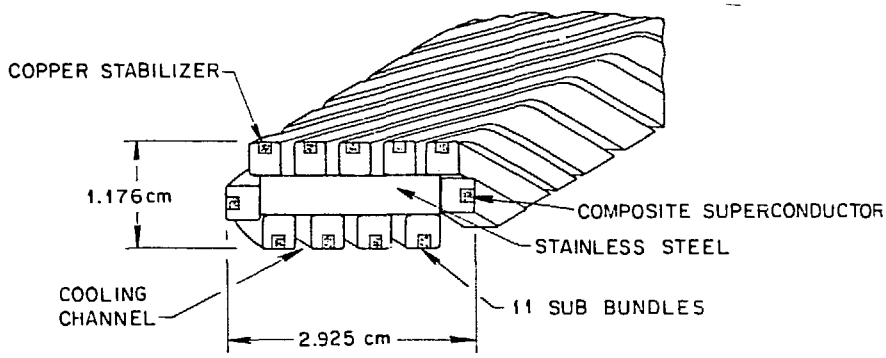

Fig. 1 Pool boiling type conductor with 11 subelements, prototypical of the General Electric LCP conductor.

ORNL/DWG/FED-77270

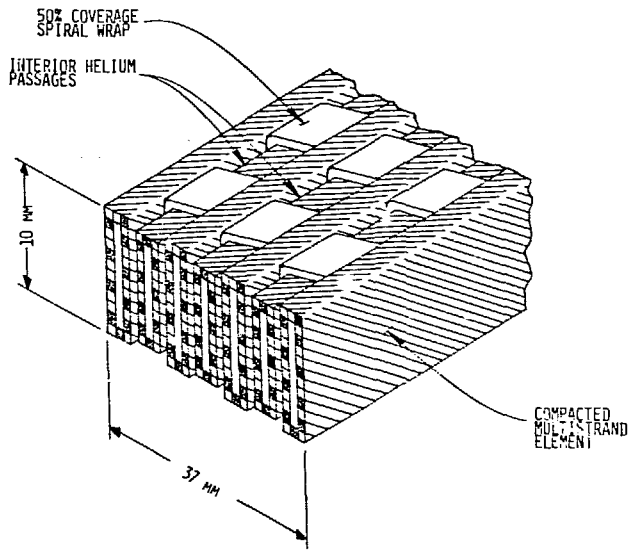

Fig. 2 Pool boiling type conductor with 7 parallel elements.

ORNL/DWG/FED-78-554

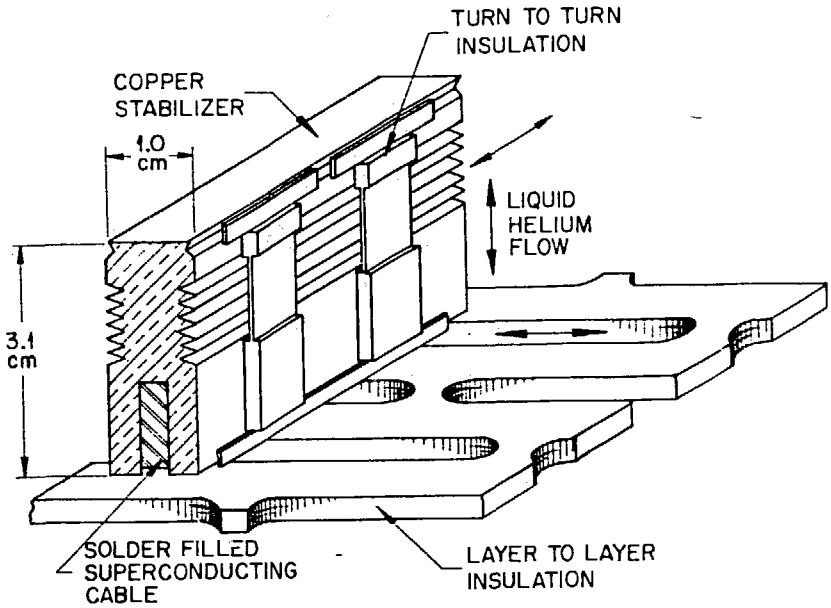

Fig. 3 Pool boiling type conductor with imbedded, compacted cable, prototypical of the General Dynamic LCP conductor.

ORNL/DWG/FED-78-504

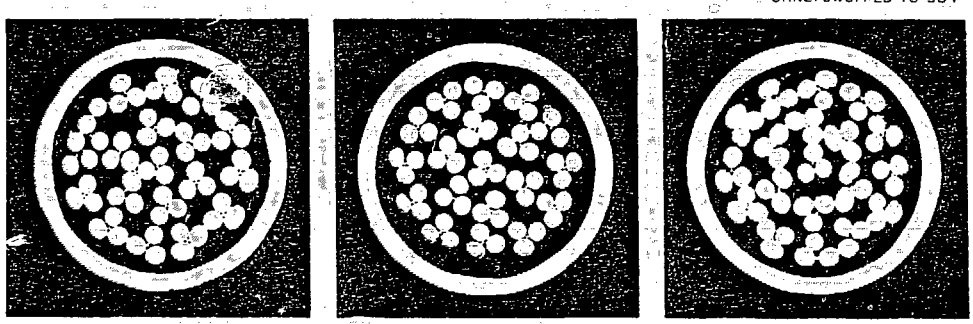

Fig. 4 Forced flow, cable-in-conduit type conductors with 19 x 3 x 1 mm cable pattern and variation of stabilizer distribution.

ORNL/DWG/FED-77759

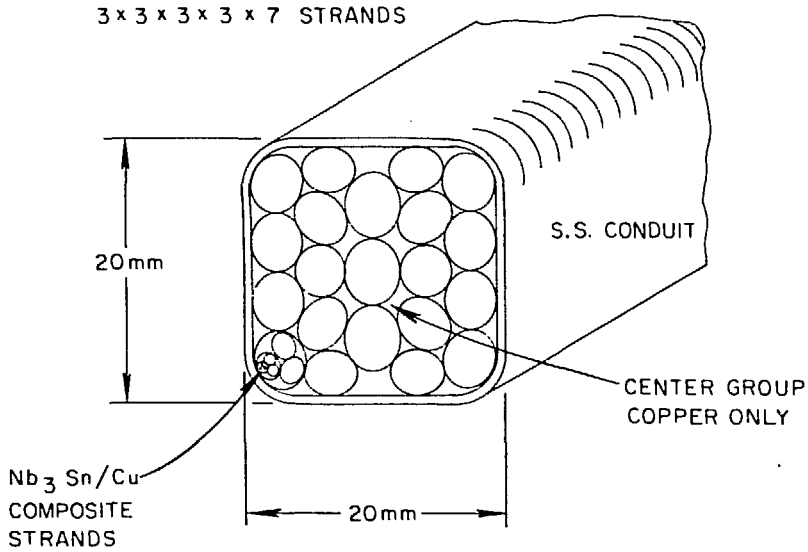

Fig. 5 Forced flow, cable-in-conduit type conductor with 7 x 3 x 3 x 3 x 3 x 0.73 mm cable pattern, prototypical of the Westinghouse LCP conductor.

ORNL/DWG/FED-77760

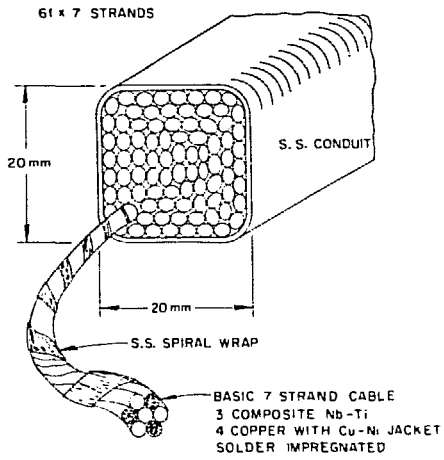

Fig. 6 Forced flow, cable-in-conduit type conductor with 37 x 7 x 0.56 mm cable pattern and stainless steel wrap around cable elements.

ORNL/DWG/FED-77274

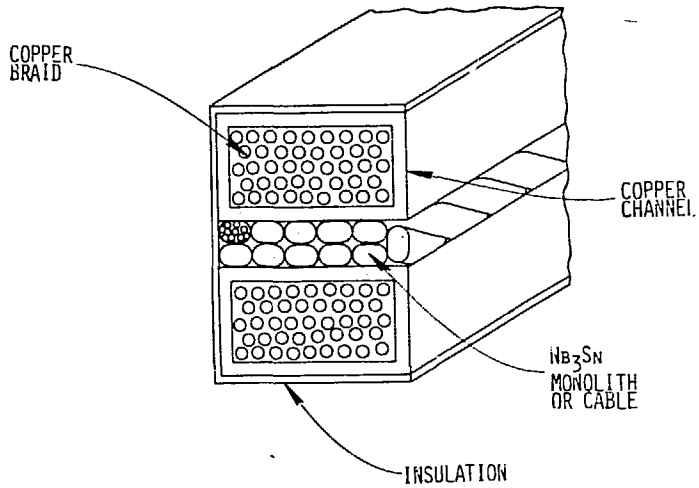

Fig. 7 Forced flow conductor utilizing external heat exchangers.

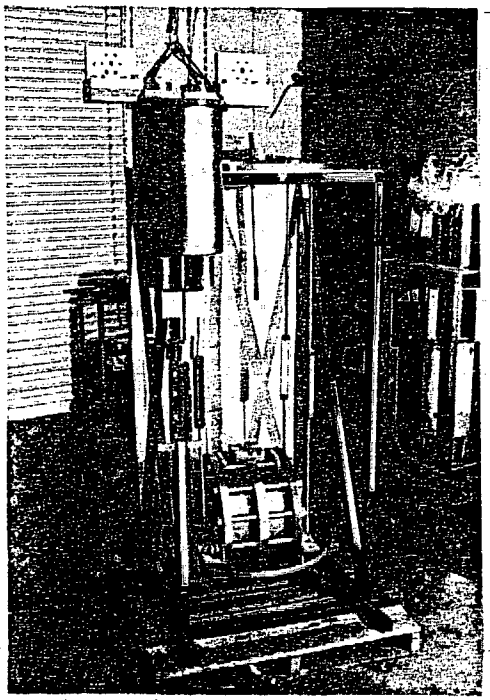

Fig. 8 Short sample test facility for testing high current conductors.

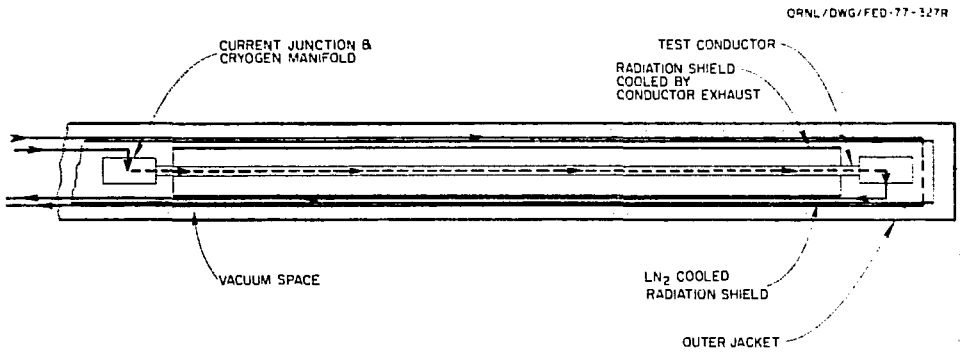

Fig. 9 Schematic of apparatus for measuring pressure drop and heat transfer in forced flow conductors.

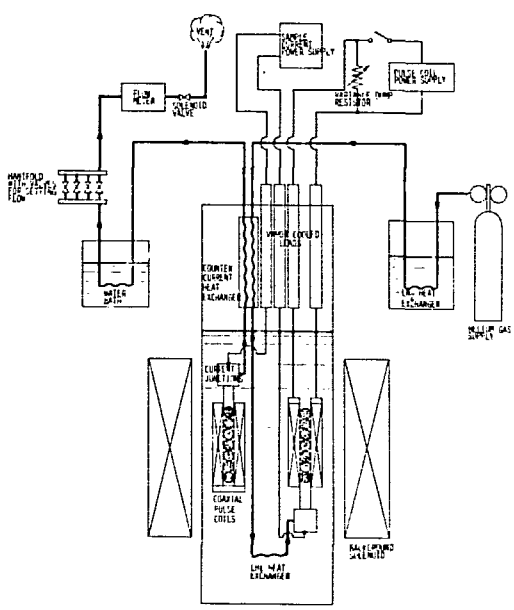

Fig. 10 Schematic of apparatus for investigating stability in subsize forced flow conductors.

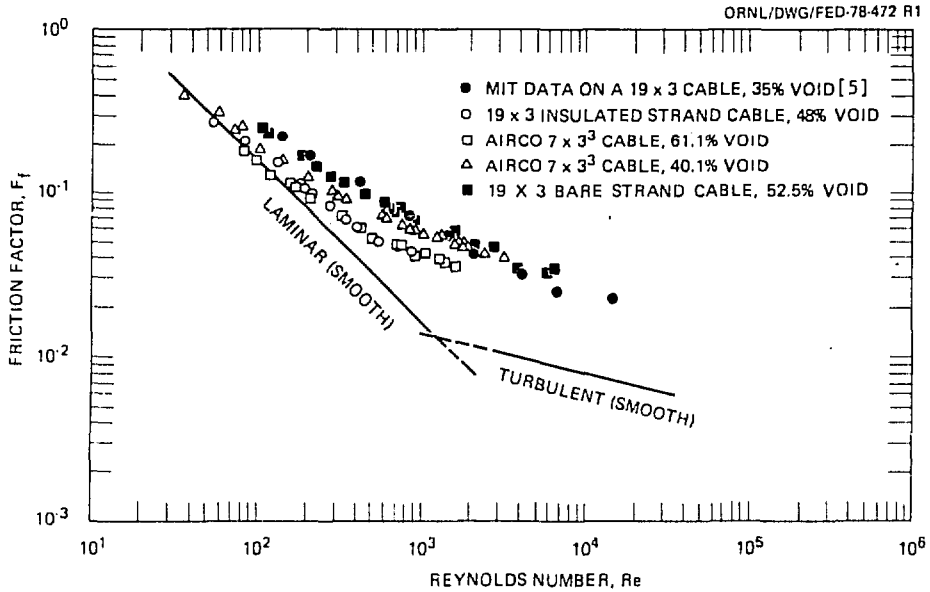

Fig. 11 Measurements of pressure drop versus flow (friction factor versus Reynolds number) in several different forced flow conductors.