CONF-871007--71

THE CONFIGURATION DEVELOPMENT OF THE COMPACT IGNITION TOKAMAK DEVICE*

"The submitted manuscript has been authored by a contractor of the U.S. Government under contract No. DE-AC05-84OR21400. Accordingly, the U.S. Government retains a nonexclusive, royalty-free license to publish or reproduce the published form of this contribution, or allow others to do so, for U.S. Government purposes."

T. G. Brown
Fusion Engineering Design Center
P.O. Box Y
Oak Ridge, TN 37831

CONF-871007--71

DE88 015229

Abstract

The Compact Ignition Tokamak (CIT) device is planned as the next major fusion device to be built at the Princeton Plasma Physics Laboratory to demonstrate ignition operations of a burning plasma. Stringent engineering requirements have been imposed on this device by physics necessities of high margins against ignition and by cost constraints in minimizing the overall cost of the project. A compact design has been developed under these design conditions incorporating many unique design features, including a hydraulic preload system to provide a compression load to the toroidal field (TF) inner leg and using a high-strength copper-Inconel composite material in the design of the TF coil and the ohmic heating solenoid. The device is inertially cooled by liquid nitrogen, and the vacuum vessel, coils, and supporting structure are contained in a thermally insulated cryostat. A close-in igloo shield surrounds the device to provide the capability for hands-on access within the test cell and also to minimize activation. Even with the compact nature of this device, there still remains the basic requirement of maximizing access to the plasma for diagnostics and heating components; access for electrical leads and coolant lines; and access to provide the capability of remotely maintaining all diagnostic and peripheral equipment that interfaces with the device. This paper describes the configurational development that has taken place during the conceptual design period of the CIT project, highlighting the major design integration features used to develop a functional device that meets the physics and component design requirements.

Introduction

The core configuration of the present Compact Ignition Tokamak (CIT) device was developed as an outgrowth of the ignition studies carried out during FY 1986. A number of characteristic features evolved during this phase, which resulted in three distinguishable candidate design options. The distinguishing features included a hydraulic preload system used to apply a preload to the inner leg of the toroidal field (TF) coil; a sliding-joint concept located near the TF coil inboard leg which acts to decouple the vertical load of the outboard region of the TF coil from the inner leg; and a conventional TF coil design option that incorporates a copper-Inconel sandwich construction to optimize the resistance and strength characteristics of the coil. Figure 1 illustrates the three design options and highlights their characteristic features. After further design and structural analysis, the sliding-joint approach was found to be less effective than the preload method in unloading the TF coil inner leg. The joint extended beyond the straight section of the TF coil; current was therefore able to flow around the corner, and an appreciable amount of vertical load thus remained in the TF coil inner leg.

A baseline design configuration was established which combines the features of the hydraulic preload concept and the composite copper-Inconel TF coil design. The machine size has evolved during the preconceptual design period because of physics and engineering refinements. The present baseline machine sits at 1.75 m. It has more margin with respect to q and V-s, has more reasonable vacuum vessel and first-wall envelope space, and does not rely on an active preload system to achieve

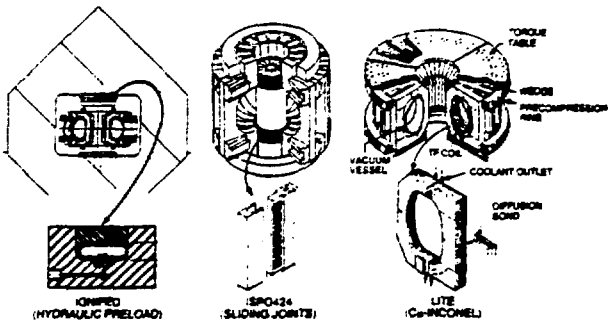

Fig. 1. Ignition studies design options.

normal operating conditions. The preload structure currently is designed to allow the TF system to operate at 12 T; the system, however, can operate independently of any preload at 10 T to meet normal operating parameters. Figure 2 [1] traces the machine size changes from the current baseline, 1.75-m machine back to the FY 1986 devices developed during the ignition studies period.

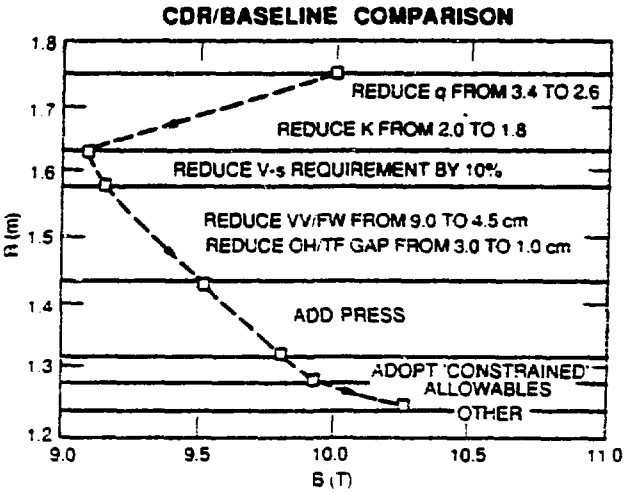

Fig. 2. CIT size evolution.

System Configuration

The details of the CIT device core are shown in Fig. 3, which highlights a copper-Inconel ohmic heating (OH) solenoid and a TF coil inner leg, exterior poloidal field (PF) coils, and interior control coils. The TF coils are modified bitter plates with the inner leg made of a composite of explosion-bonded copper to Inconel. A partial case is used to support the upper, lower, and outboard leg sections. The TF and PF coils are nitrogen precooled, undergoing an adiabatic temperature rise during a pulse. The solenoid coils are a double-pancake type of

*Research sponsored by the Office of Fusion Energy, U.S. Department of Energy, under contract DE-AC05-84OR21400 with Martin Marietta Energy Systems, Inc.

MASTER

DISTRIBUTION OF THIS DOCUMENT IS UNLIMITED

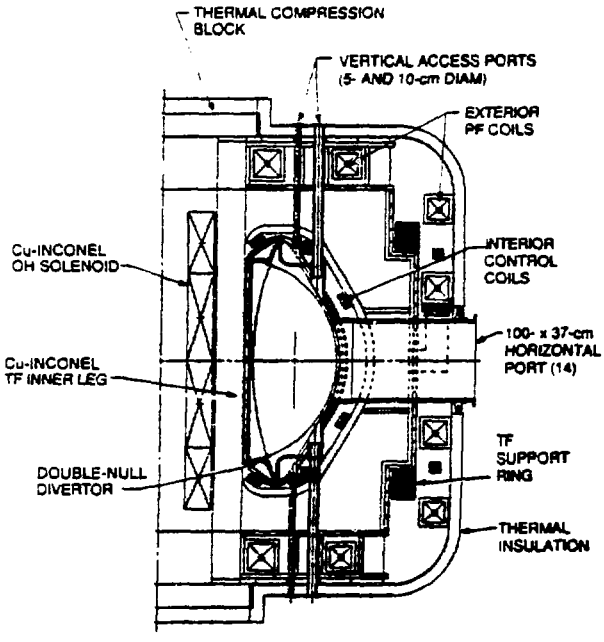

Fig. 3. CIT device core.

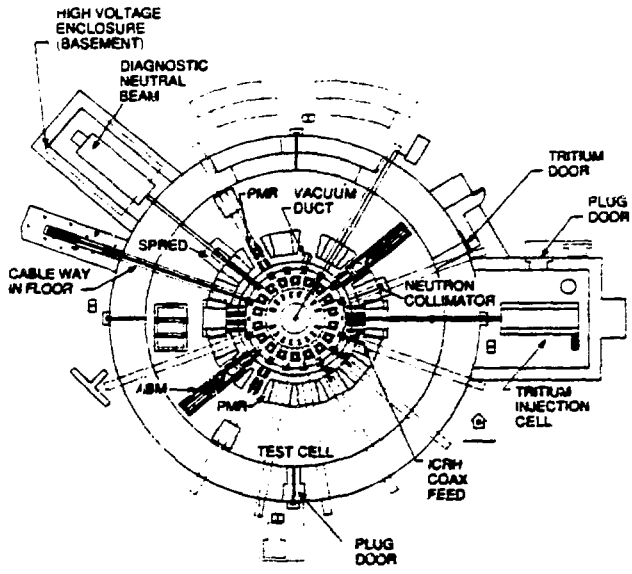

Fig. 4. CIT plan view of device and test cell.

winding cut from a single laminated plate of explosion-bonded Inconel-copper-Inconel. The vacuum vessel is made of Inconel 625 material with double-wall inboard and single-wall outboard construction. A total assembly is prefabricated into two 180° sectors, inserted into two TF coil half assemblies, and joined together in situ by welding. Sixteen large horizontal ports and 16 pairs of circular vertical ports, top and bottom, are attached to the main vacuum vessel. The vessel assembly is cooled by forced nitrogen gas that passes through poloidal cooling channels welded to the outside of the vessel. Although the machine major radius has increased because of size changes imposed by physics and engineering refinements, the basic-device core configuration has not changed. The CIT device is located in a circular test cell. Trade-offs were made between circular and rectangular test cells, and the circular cell was selected, primarily from a cost standpoint. The CIT device–test cell interface is illustrated in the plan view drawing of Fig. 4. A pellet injection system and a diagnostic neutral beam are housed outside the test cell; midplane tubes are used to interface with the vacuum vessel. The device core is housed in a thermally insulated cryostat. Upper and lower glass epoxy compression blocks and stainless steel support plates are located between the tokamak device core and the preload structure. The compression blocks transmit the preload to the TF coil inner leg while insulating the cold coils from the warm support plate and preload structure. In an early preload structural design, sized for a 50-million-pound preload (see Fig. 1), a hydraulic assembly was located between the upper compression block and the support plate attached to the preload structure. The hydraulic cylinders were located in a direct load path to the preload structure; however, their position presented difficulties in replacing them and limited the area of the cylinders, requiring an operating pressure of 30,000 psi. Design changes were required to correct this situation. The CIT physics requirements were also modified to include a 12-T operation, imposing a 115-million-pound design requirement on the preload structure to unload the TF coil inner leg. Figure 5 shows the revised preload structural design that was developed to meet these changes. The current structure consists of thick plates and built-up I-beams. An intermediate structure has been located between the device core and the hydraulic cylinders, allowing them to be located in the

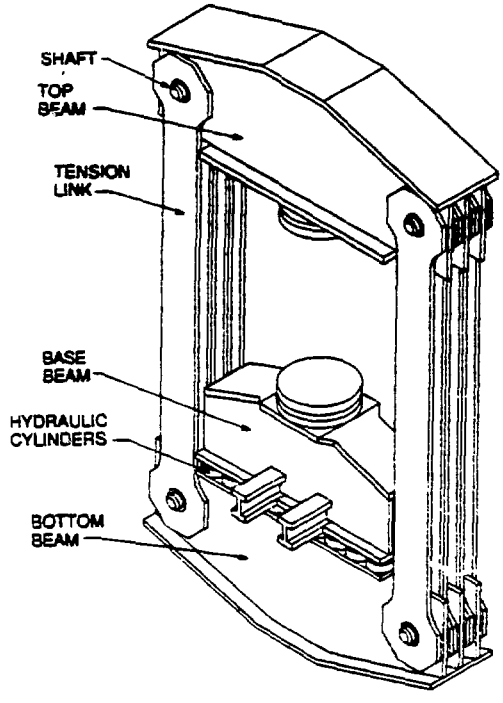

Fig. 5. Preload structural design.

basement of the test cell (improving maintenance) and enabling the area of the cylinders to increase. In this revised design, the hydraulic pressure is reduced to less than 10,000 psi.

A close-in 1.8-m-thick borated-concrete igloo shield surrounds the device core and is designed to minimize penetrations through it and to maximize the ease of access to internal components. Most peripheral components are located between the igloo shield and the device thermal boundary. The igloo shield reduces air activation and allows hands-on access within

the test cell. Figure 6 illustrates the device core and press structure with a typically configured close-in igloo shield. A number of configurational options are being considered to optimize access and maximize device component maintenance. Figure 7 shows the typical arrangement for routing diagnostic lines to midplane and vertical ports. In general, the lines are routed in a space left between the igloo shield and the thermal cryostat and exit in a floor trench.

Ex-vessel remote maintenance tasks in the test cell are accomplished by using a bridge-mounted manipulator system and a mobile telerobot. Personnel access into the test cell is permitted 24 h after shutdown with the igloo shield in place. In-vessel maintenance tasks are accomplished by using two articulated-boom manipulators to replace graphite tiles and divertor plates and for leak detection and welding. They operate under vacuum and are stored behind a shield plug and vacuum isolation valve.

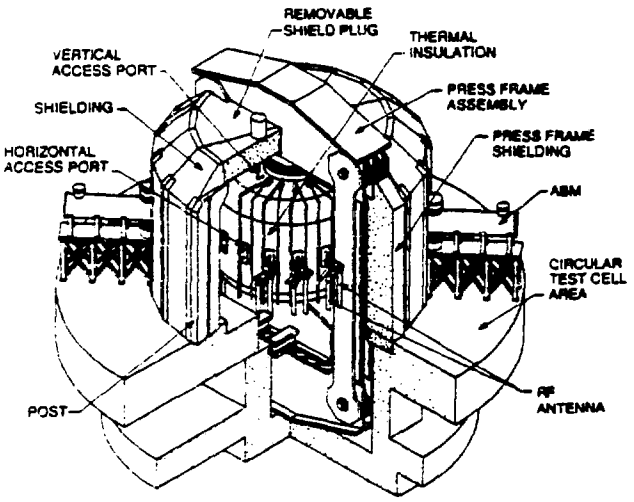

Fig. 6. Isometric view of CIT device core.

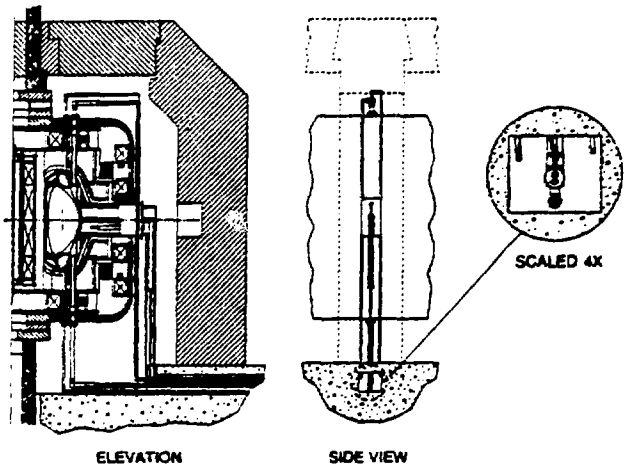

Fig. 7. Typical diagnostic arrangement.

Conclusions

In summary, the CIT device configuration has been established which meets the physics and engineering requirements as specified in the preconceptual design phase. The size of the CIT device has grown because of physics margin, operating needs, and engineering component design and/or space requirements. Although the machine size has changed, the overall configurational concept has been retained. As the project proceeds into the more detailed level of design, undoubtedly there will be changes. The basic configuration will also evolve to meet the changes brought on by component design, operations, or maintenance requirements.

Reference

[1] Data developed by W. Reiersen (Princeton Plasma Physics Laboratory) in performing CIT system studies.

FUSION ENGINEERING DESIGN CENTER

CONF-871007--71-[redacted]

DISCLAIMER

This report was prepared as an account of work sponsored by an agency of the United States Government. Neither the United States Government nor any agency thereof, nor any of their employees, makes any warranty, express or implied, or assumes any legal liability or responsibility for the accuracy, completeness, or usefulness of any information, apparatus, product, or process disclosed, or represents that its use would not infringe privately owned rights. Reference herein to any specific commercial product, process, or service by trade name, trademark, manufacturer, or otherwise does not necessarily constitute or imply its endorsement, recommendation, or favoring by the United States Government or any agency thereof. The views and opinions of authors expressed herein do not necessarily state or reflect those of the United States Government or any agency thereof.

THE CONFIGURATION DEVELOPMENT OF THE COMPACT IGNITION TOKAMAK (CIT) DEVICE

CONF-871007--71-[redacted]

[redacted]

T. G. BROWN

PRESENTED AT

THE 12TH SYMPOSIUM ON FUSION ENGINEERING

MONTEREY, CALIFORNIA

OCTOBER 12-16, 1987

*Research sponsored by the Office of Fusion Energy, U.S. Department of Energy, under contract DE-AC05-84OR21400 with Martin Marietta Energy Systems, Incorporated.

MASTER

DISTRIBUTION OF THIS DOCUMENT IS UNLIMITED

TOPICS TO BE COVERED

- DESIGN OPTIONS CONSIDERED IN THE DEVELOPMENT OF CIT
- OVERVIEW OF THE CIT BASELING CONFIGURATION
- SUMMARY

IGNITION STUDIES DESIGN OPTIONS

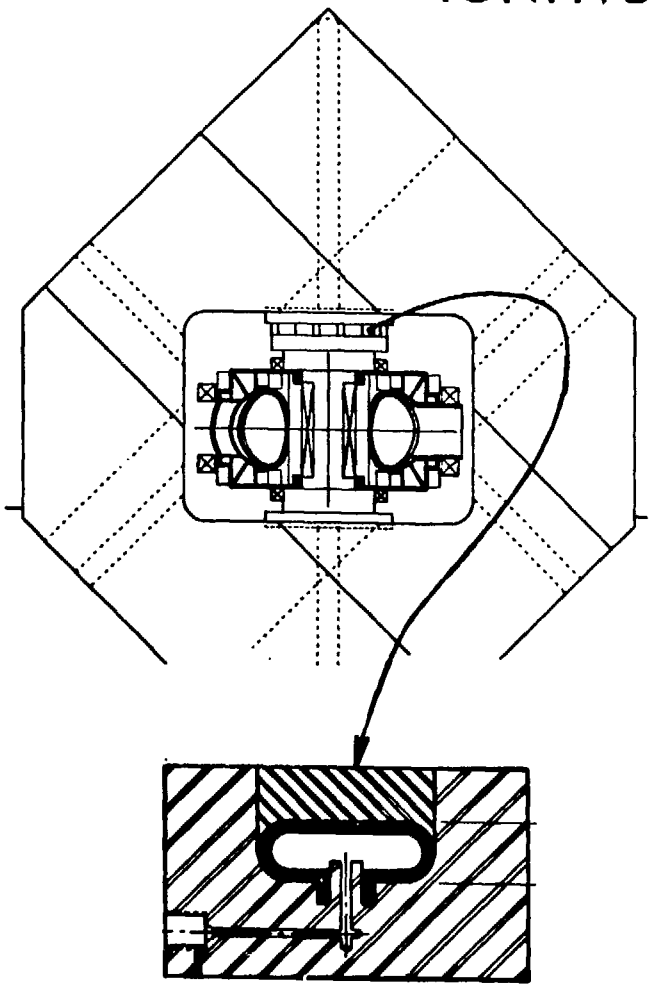

IGNIFED
(Hydraulic Preload)

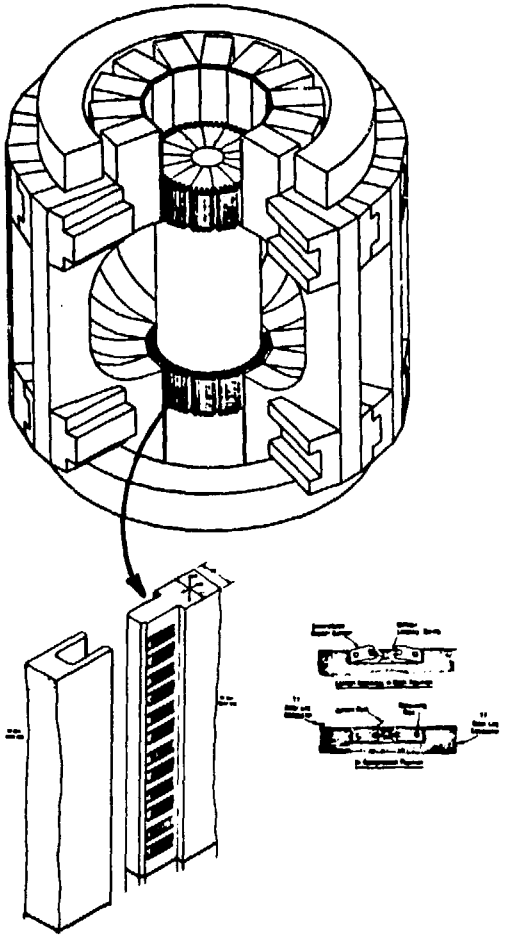

ISP0424
(Sliding Joints)

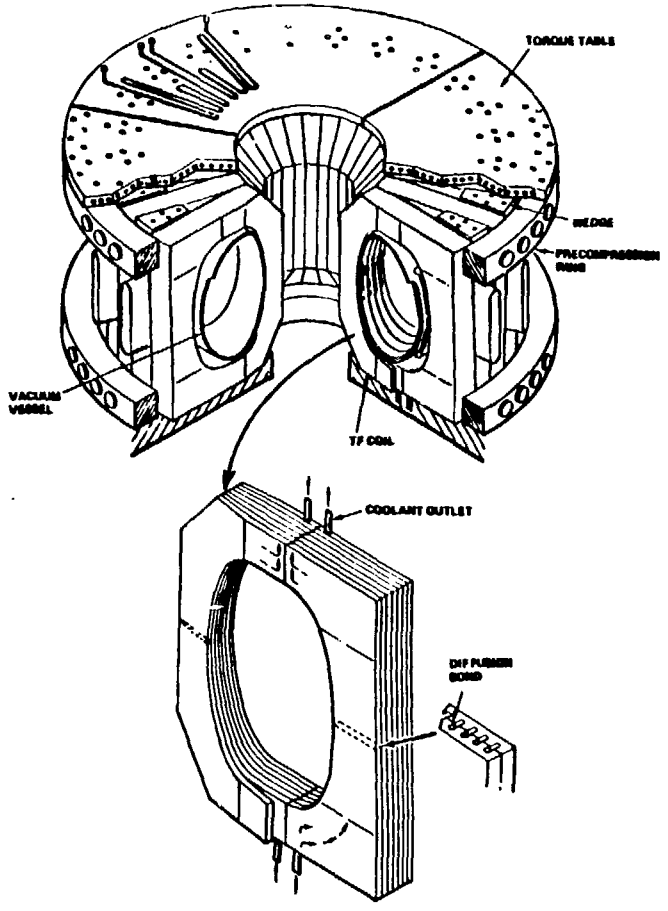

LITE
(Cu Inconel)

AN IGLOO SHIELD WAS DESIGNED TO MINIMIZE PENETRATIONS THROUGH IT PLUS MAXIMIZE EASE OF GAINING ACCESS TO INTERNAL COMPONENTS

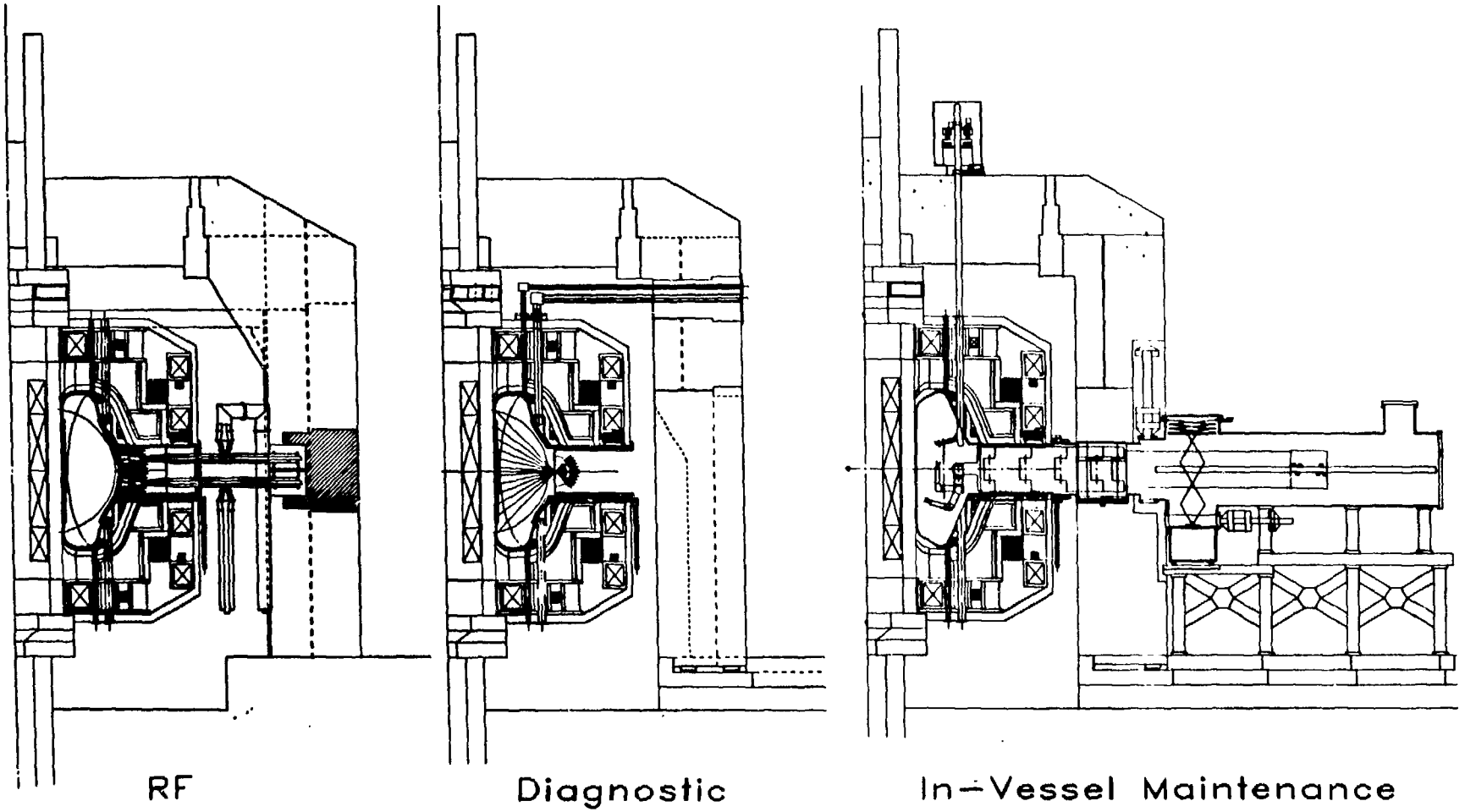

IGLOO SHIELD ARRANGEMENT

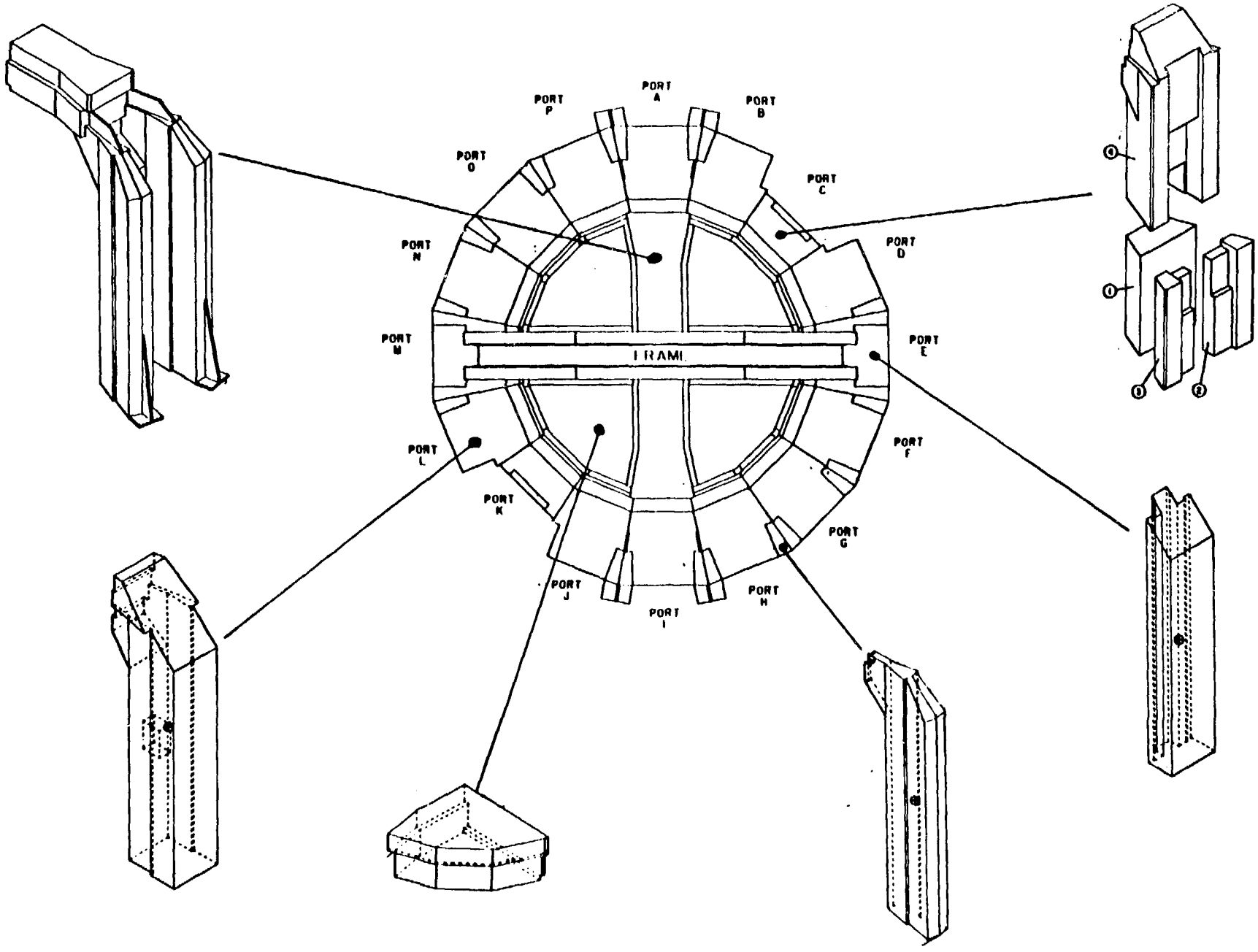

OTHER DESIGN OPTIONS WERE STUDIED

NonPress Option

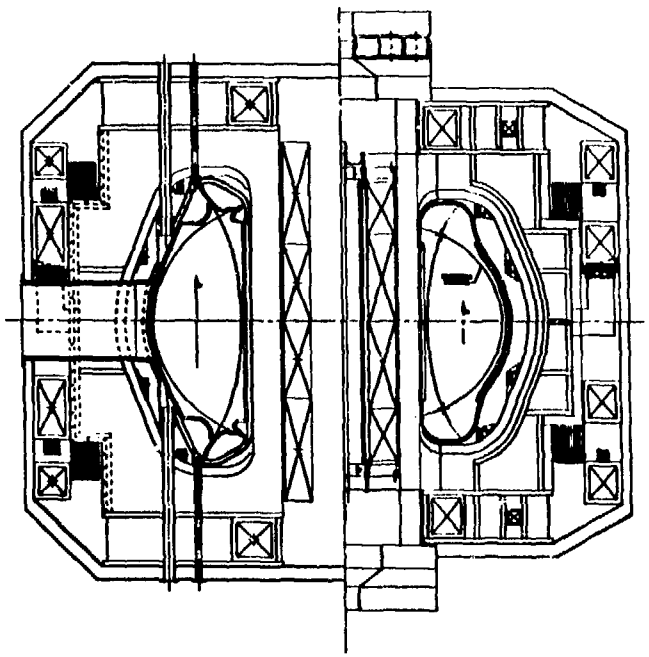

Internal PF Option

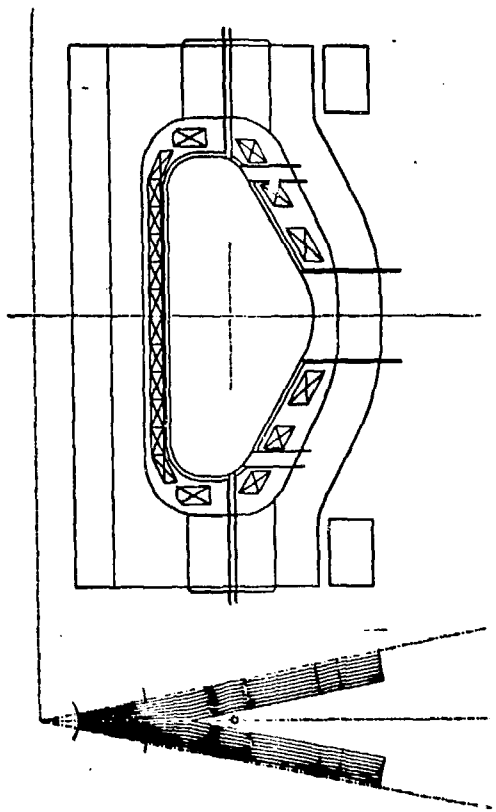

CIT HYDRAULIC PRESS DEVELOPMENT

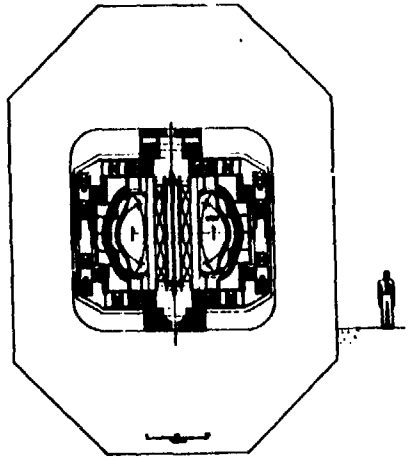

PICTURE FRAME
1.32 m RO
25,000 T PRESS

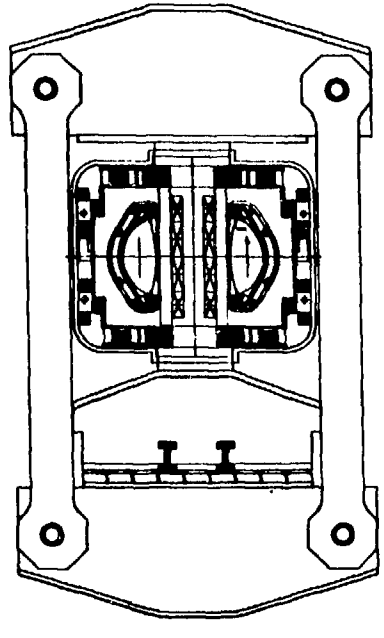

TENSION LINK
1.75 m RO
57,500 T PRESS

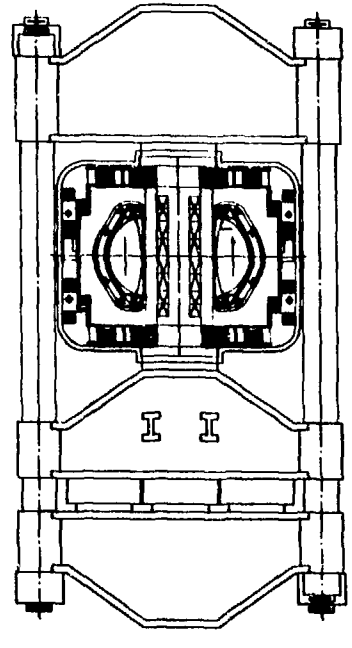

COLUMN & SLEEVE
1.75 m RO
25,000 T PRESS

CIT CONCEPTUAL DESIGN

FRONT VIEW

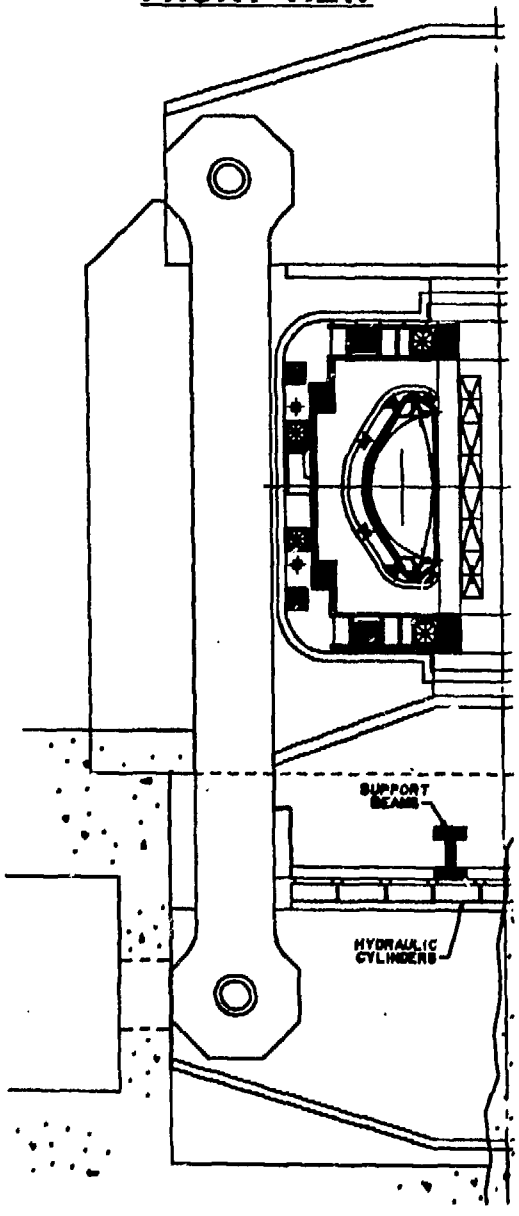

- o CU-INCONEL TF
- o HYDRAULIC PRELOAD

PARAMETERS

R_o	1.73 m
a	0.549 m
Elong	2.0/2.2
B_o	10/12 T
Beta	3.8/4.9%
Burn	5 s
RF	20 MW

SIDE VIEW

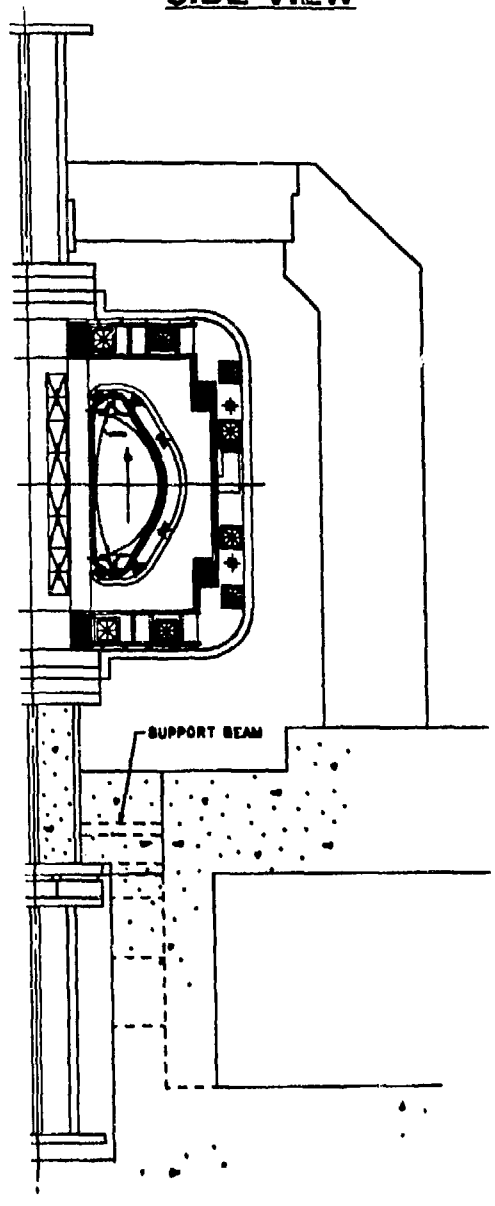

KEY CIT ENGINEERING DESIGN FEATURES INCLUDE:

- 18 HIGH STRENGTH CU-INCONEL TF COILS
- ALL EXTERNAL PF COILS WITH INTERNAL CONTROL COILS
- HIGH STRENGTH CU-INCONEL OH SOLENOID
- INERTIALLY-COOLED LN_2 TF AND PF SYSTEM
- CONFIGURATION ALLOWS INCORPORATION OF A 52,000 METRIC TON PRELOAD SYSTEM
- CLOSE-IN IGLOO SHIELD USED TO MINIMIZE AIR ACTIVATION
- IN-VESSEL, VACUUM RATED, REMOTE MAINTENANCE SYSTEM
- OVERALL DEVICE CONFIGURATION DESIGNED FOR REMOTE MAINTENANCE OF DIAGNOSTIC AND PERIPHERAL EQUIPMENT

CIT DEVICE CORE

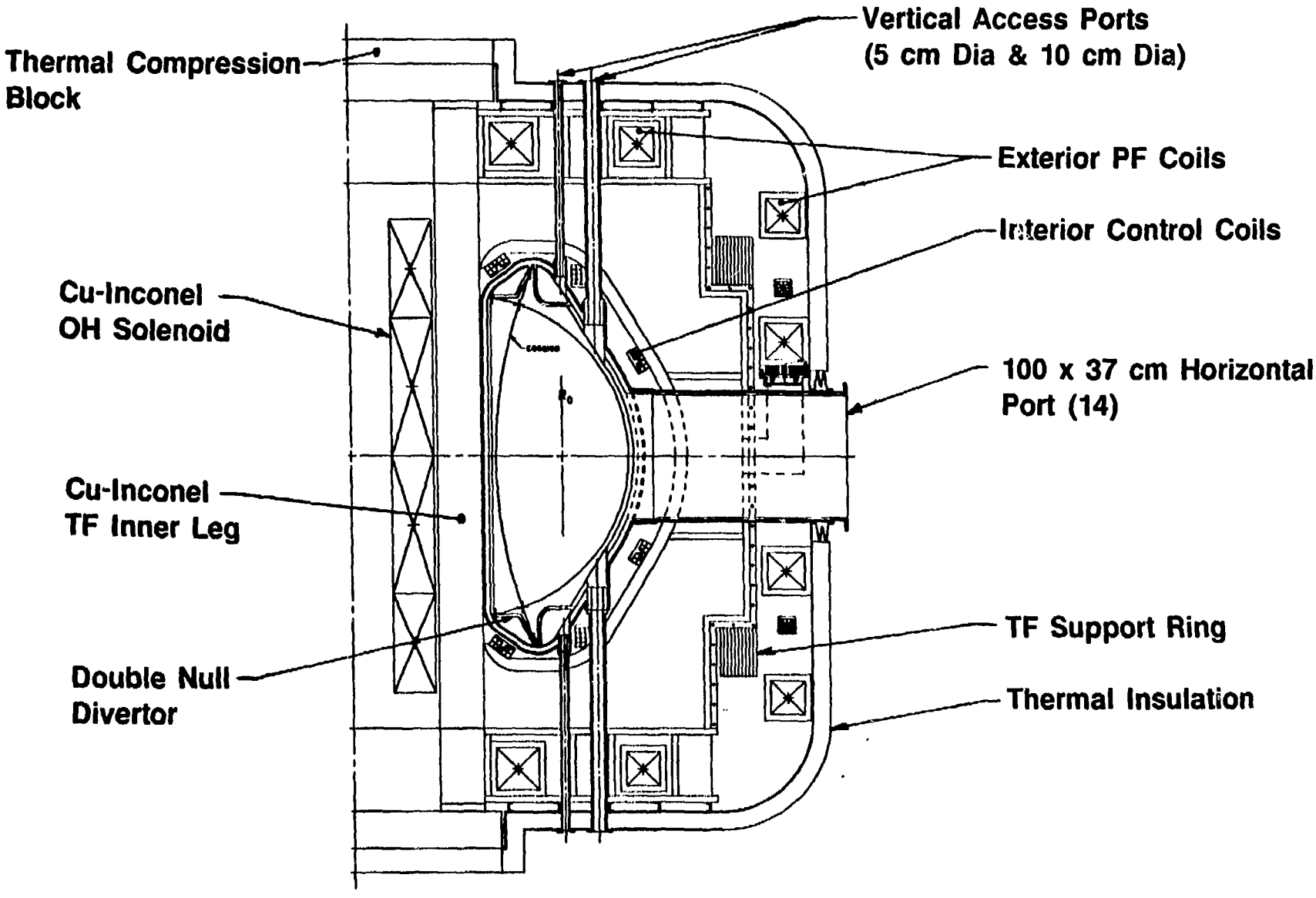

TF ASSEMBLY

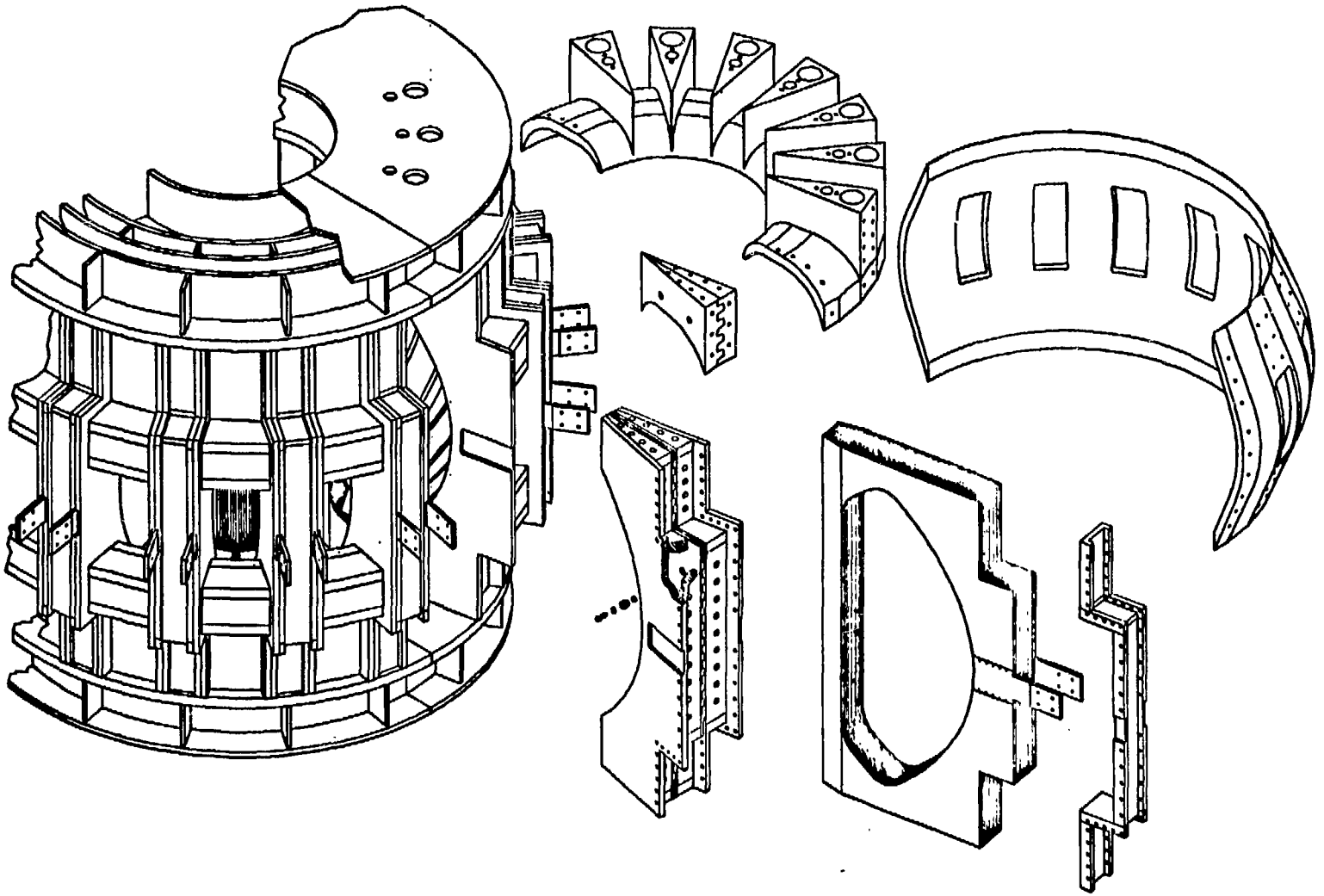

PRELOAD SYSTEM

- THE PRELOAD STRUCTURE IS DESIGNED TO SUPPORT A VERTICAL PRELOAD ON THE TF INNER LEG CONSISTING OF:

  52,000 METRIC TONS
  241 MPa ON TF INNER LEG

- THE PRELOAD STRUCTURE CONSISTS OF THICK PLATE, BUILT-UP I-BEAMS

- A HYDRAULIC SYSTEM, WITH MULTIPLE HYDRAULIC CYLINDERS OPERATING AT 55 MPa DEVELOPS THE PRELOAD

CIT FRONT ELEVATION VIEW

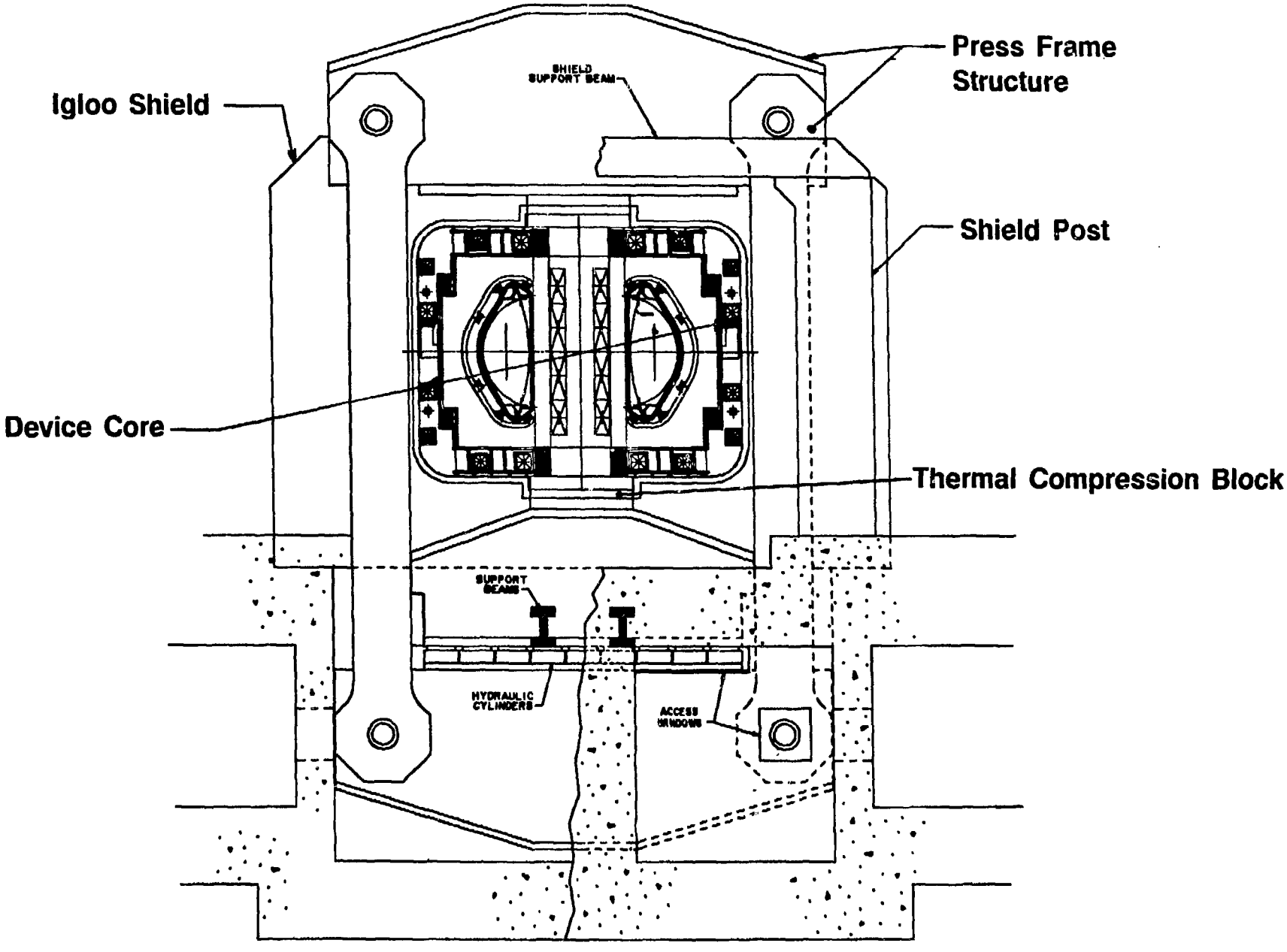

CIT SIDE ELEVATION VIEW

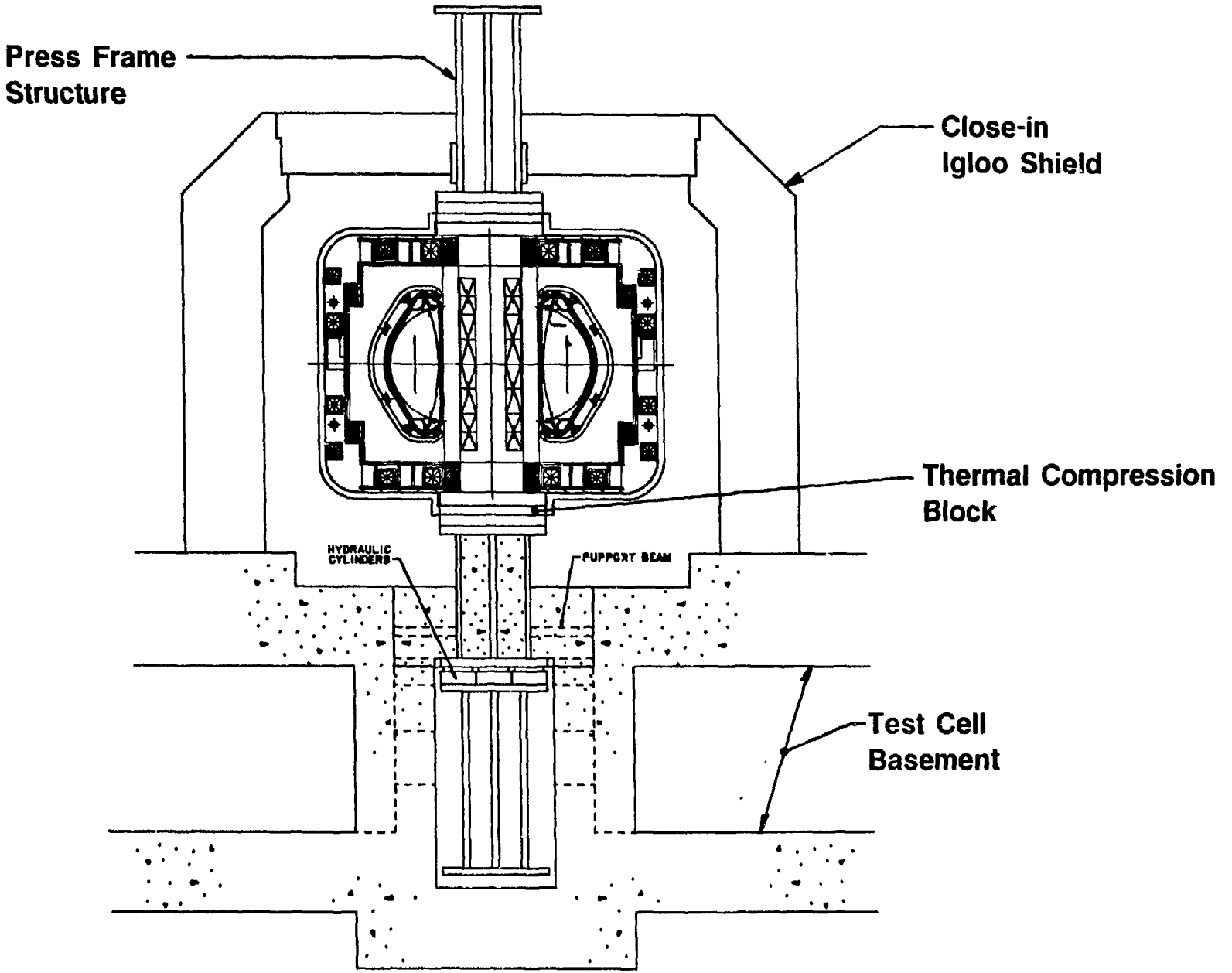

THE MAJORITY OF DIAGNOSTIC/MACHINE INTERFACES OCCUR INSIDE THE IGLOO SHIELD

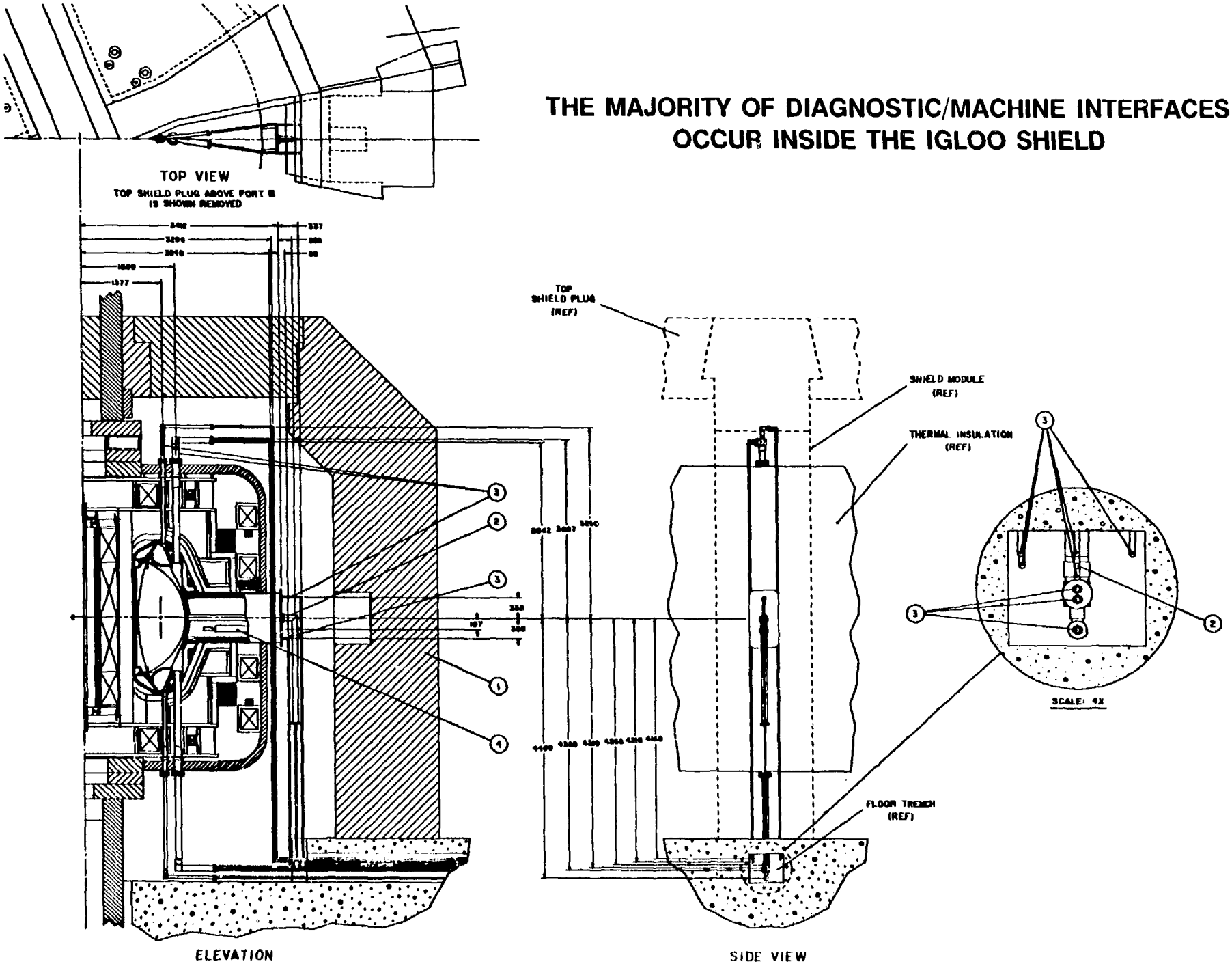

IN-VESSEL REMOTE MAINTENANCE SYSTEM

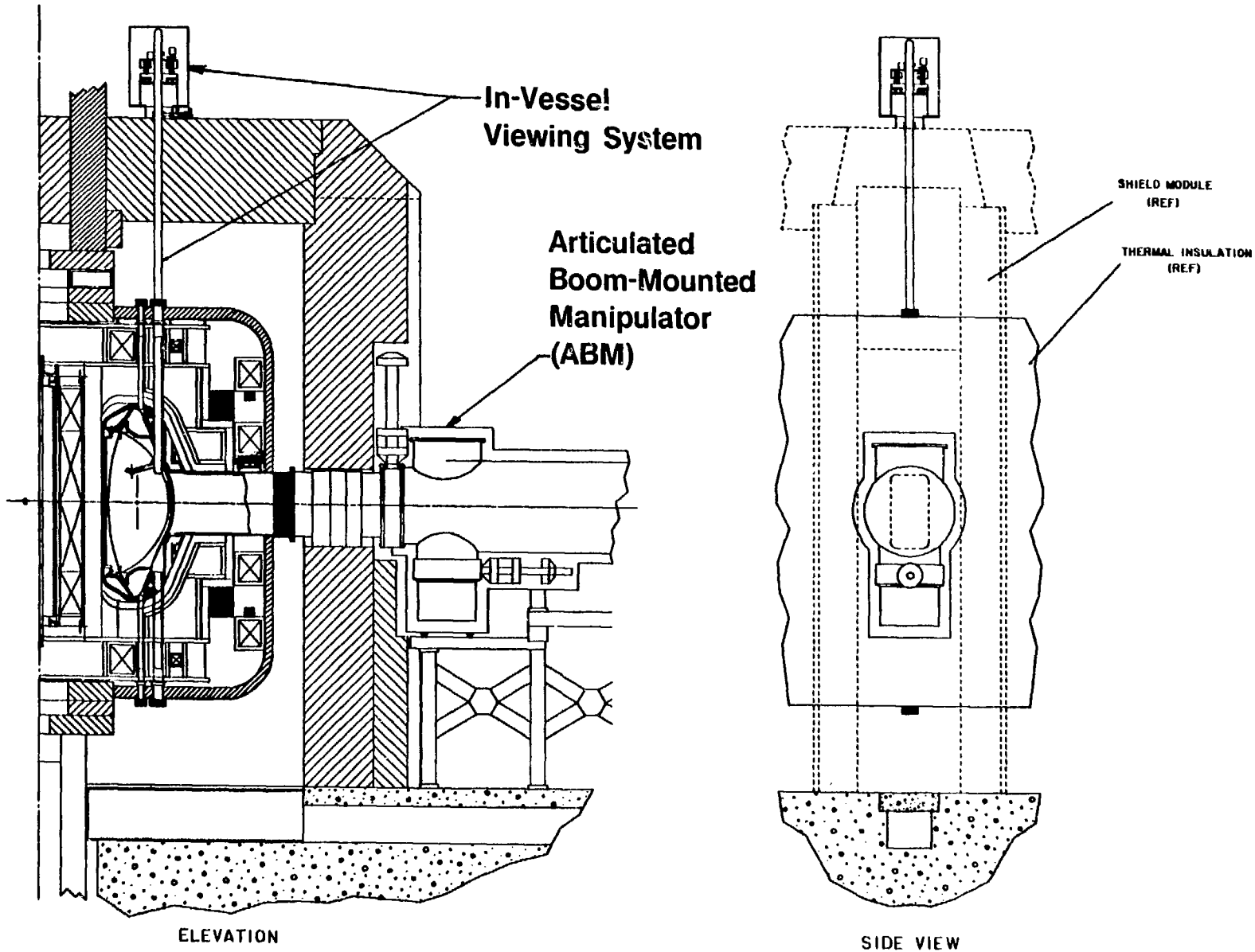

PLAN VIEW OF DEVICE/TEST CELL

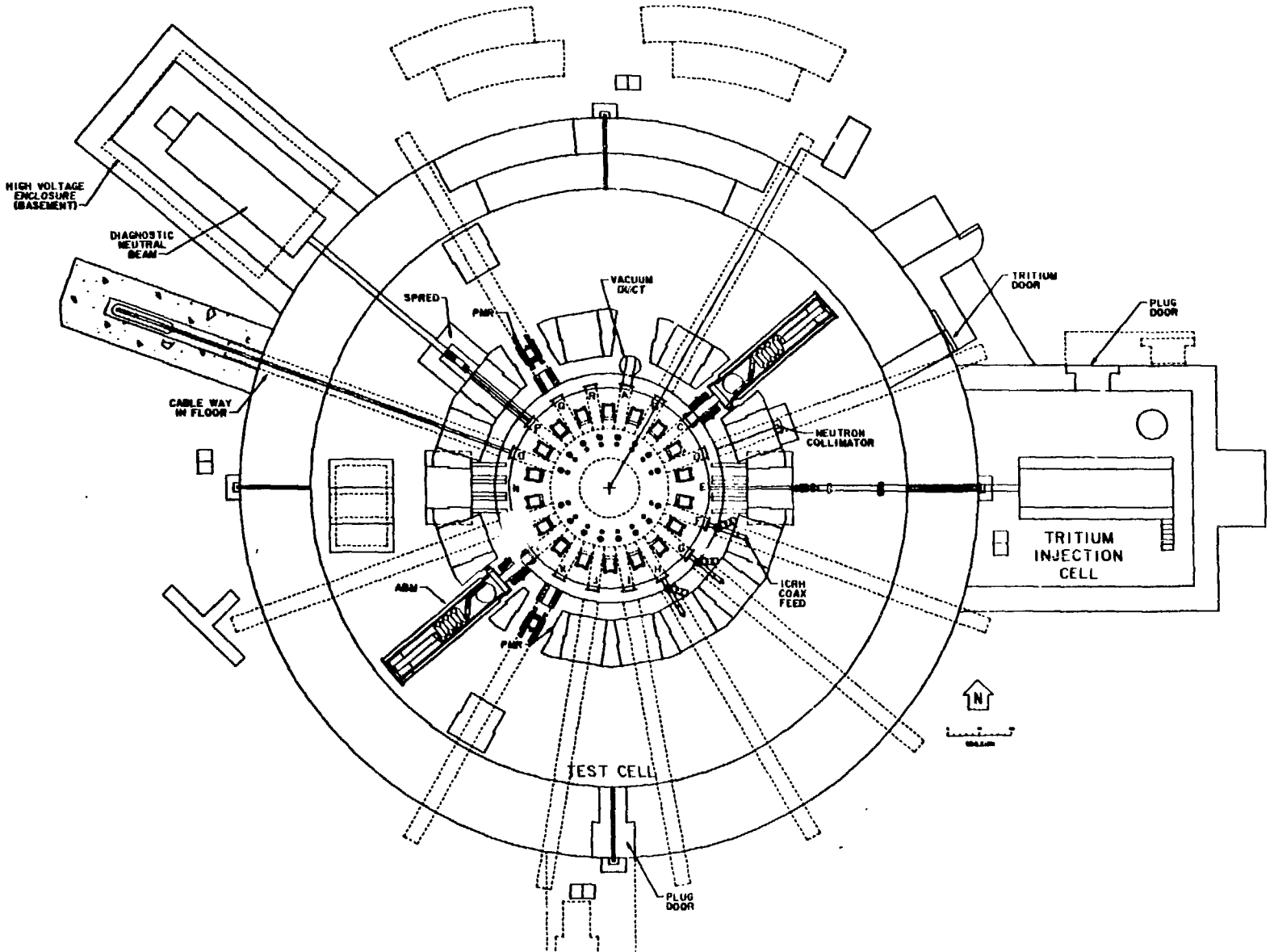

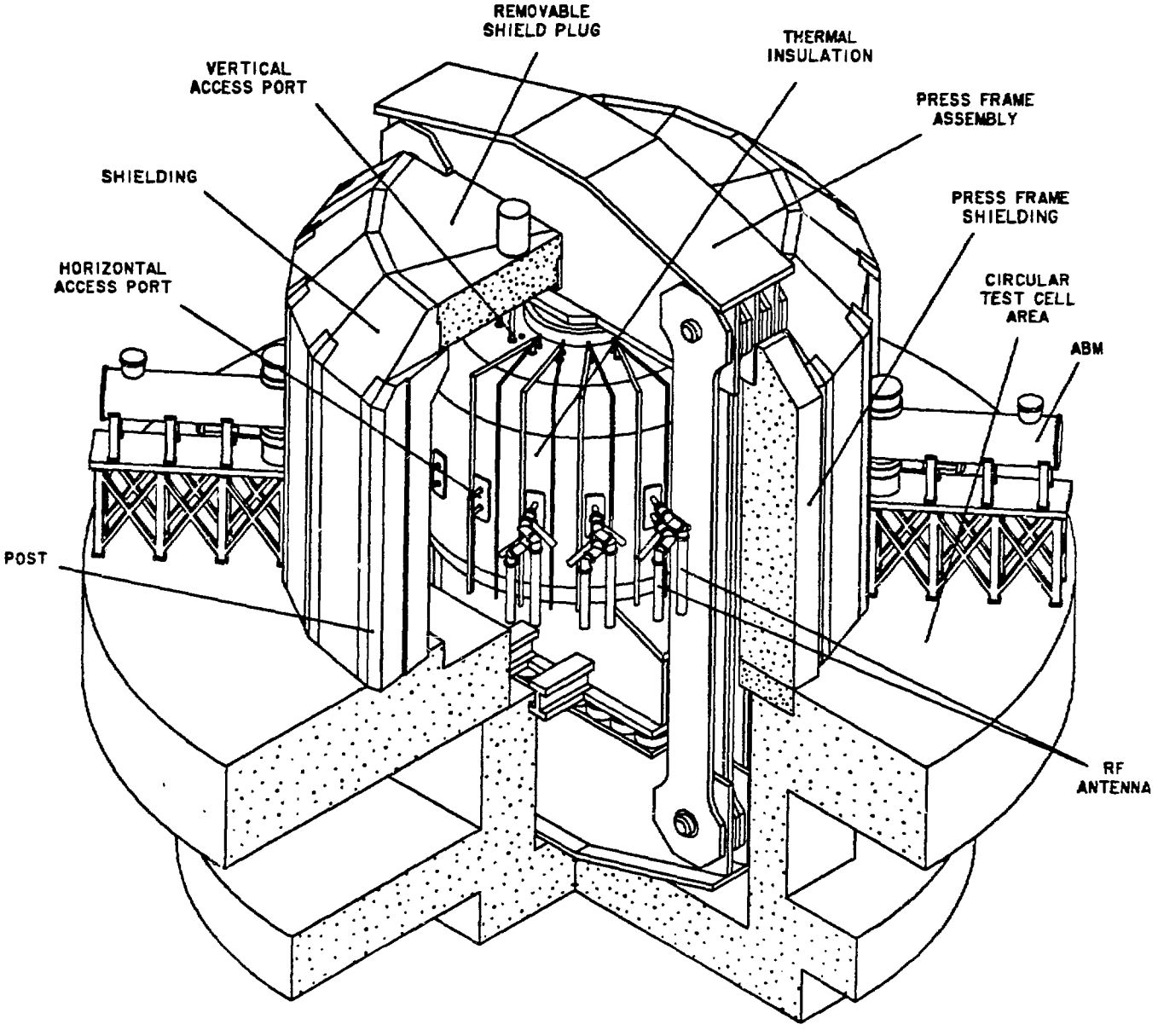
REMOVABLE
SHIELD PLUG
THERMAL
INSULATION
VERTICAL
ACCESS PORT
PRESS FRAME
ASSEMBLY
SHIELDING
PRESS FRAME
SHIELDING
HORIZONTAL
ACCESS PORT
CIRCULAR
TEST CELL
AREA
ABM
POST
RF
ANTENNA

CIT DEVICE

SUMMARY

- A CIT DEVICE CONFIGURATION HAS BEEN ESTABLISHED WHICH MEETS PHYSICS REQUIREMENTS, PERFORMANCE MARGINS AND ENGINEERING COMPONENT DESIGN NEEDS
- THE BASELINE (R_0=1.75 m) MACHINE APPEARS REASONABLE BASED ON THE ANALYSIS PERFORMED TO DATE...MORE ANALYSIS REMAINS TO BE DONE