The submitted manuscript has been authored by a contractor of the U. S. Government under contract No. W-31-109-ENG-38. Accordingly, the U. S. Government retains a nonexclusive, royalty-free license to publish or reproduce the published form of this contribution, or allow others to do so, for U. S. Government purposes.

ANL-HEP-CP-82-44
Conf-8206123--3

ANL-HEP-CP--82-44
DE83 009078

The Soudan 2 Proposal

L. E. Price
Argonne National Laboratory

Abstract

A proposal to build a Nucleon Decay Detector emphasizing fine-grained tracking and ionization measurements has been submitted by groups from Argonne National Laboratory, University of Minnesota, and Oxford University to funding agencies in the U.S. and U.K. The proposal is based on the use of long drifting in gas detectors surrounded by steel. Planar drift chambers with 50 cm drifts have been developed for the detector. Alternative drifting schemes are being investigated. The detector will have an initial mass of 1000 tons, yielding a sensitivity to nucleon decay at the 10^{32} year lifetime level. It will later be expanded to 5000 tons.

Introduction

This talk describes the large fine-grained detector for nucleon decay that has been proposed by groups from Argonne National Laboratory, University of Minnesota, and Oxford University (see Table I). The detector has been designed to emphasize fine-grained tracking and ionization measurements in order to give clear pictorial representation of nucleon decay events and of possible backgrounds, to identify expected particle types with high efficiency, and to determine the direction of particle tracks. The detector is designed to be expandable to at least 5000 tons. This new detector is part of a phased program which already has a 30-ton detector (Soudan 1) operating in the Soudan mine. Soudan 1 will be described by E. Peterson in a separate talk at this workshop. With the current detector, we have already gotten experience in doing physics in a mine environment and valuable data on the

Contribution to the Proceedings of the 1982 Summer Workshop on Proton Decay Experiments, Argonne National Laboratory (June 7-11, 1982)

MASTER

DISTRIBUTION OF THIS DOCUMENT IS UNLIMITED

ability of a particular detector to separate nucleon decay from background processes. While small, Soudan 1 will also test the calculations of muon-induced backgrounds.

Location

Although the new detector should be considered independently of the particular underground location, we have named it Soudan 2 on the assumption that it will be placed in the same mine. The Soudan iron mine in northeastern Minnesota is well suited to physics research and to nucleon decay in particular. The mine ceased commercial operation in 1963 when the U.S. Steel Corporation donated it to the state of Minnesota. It is now a part of Tower-Soudan State Historical Park and is visited during the summer months by thousands of tourists who are guided through the former mine operation in the lower levels. For this reason, the lift and other utilities have been kept fully operational by a year-round maintenance staff. The proposed Soudan 2 laboratory is on the 25th level, at a depth of 650 m, under rock of average density 3.3 g/cm^3. There are no mining operations to conflict with research. The tourists visit the 27th level during the summer months only, so that interference is minimal. The site is easily accessible all year by road and air.

Description of the Detector

The Soudan 2 detector has been proposed[1] to the U.S. Department of Energy and the U.K. Science and Engineering Research Council with an initial mass of 1000 tons, to be expanded later to 5000 tons. The fine-grained tracking and ionization measurements will be made with long drift chambers, where the sensitive gas volumes are separated by a few millimeters of steel, which comprises most of the mass of the detector. Two different drifting schemes are being investigated. One uses planar drift chambers mounted on 5 mm thick sheets of steel. The other uses cylindrical drift spaces in a close-packed array embedded in steel, with the gas spaces 3 mm apart at the closest approach. In both schemes, the average density will be 2 g/cm^3 and the maximum drift length will be 50 cm.

Since the planar drift chamber system is at present further developed[2], I will describe it in more detail. A schematic cross-section of a chamber is shown in Fig. 1. The drift field is established by conducting lines on a dielectric substrate (implemented for tests with printed circuit board) which are attached to an external resistor chain. Ionization electrons drift along electric field lines to the single anode wire at one edge of the chamber. The anode wire is surrounded on three sides by cathode, part of which is divided into pads with 2 cm spacing, in order to measure the coordinate along the anode wires. As shown in Fig. 2, the detector is built up with two of these 50 cm wide chambers on each sheet of steel. Cathode pads from 250 of these chambers are bussed together to make strips. The chambers and steel sheet are 5 m high. A time history of the signal on each anode wire and cathode strip is read out, yielding a complete image of the event.

The use of imaging long drift chambers for particle physics has been pioneered by ISIS and TPC. What is new in our chambers is that all drifting takes place close to the walls of the chamber. Drifting electrons can be lost because of imperfect electric fields, caused by charges on the dielectric surfaces between drift electrodes or by the grounded steel plates on both sides of the chamber (see Fig. 3a and 3b). They can also be lost by diffusion[3] of the electrons into the walls. We have dealt with the stray field problem by covering the drift electrodes and intervening dielectric with resistive ink (10^{10} ohms/square). The resulting electric field is shown in Fig. 3c. The problem of diffusion has been improved by using a focussing electric field instead of a uniform one. The solution of Laplace's equation for the potential which produces a constant angle of the field at the wall is

$$\phi = \phi_o + ae^{-bz} \cos(by) \quad ,$$

where z is the longitudinal (drift) coordinate, y is transverse, and the origin is at the sense wire. The angle of the field at the wall is then

$$\theta = by_{max} \quad .$$

The resulting electric field is shown in Fig. 3d.

Tests of the chamber have been made both with a constant field (b = 0) and an exponentially-shaped field with b = 0.03/cm. The gas used was 90 Ar, 10 CO_2 with a total drift voltage of 10 kV. The results of attenuation measurements are shown for the two cases in Fig. 4. The attenuations, after a 50 cm drift, of 28% for the constant field and 12% for the exponential field are consistent with all losses being due to diffusion. Position resolution has been determined to be better than 2.5 mm (the size of the source spot) and two-particle separation after the maximum drift is 1 cm.

The full detector at the 1000-ton stage uses 10^4 of these drift chambers, arrayed as shown in Fig. 5. Chambers on steel plates are grouped into 50-ton modules, which are suspended on trolleys from structural steel. Each module is 1 m wide, 5 m deep, and 5 m high and can be rolled away from the neighboring modules to allow access to the chambers and the readout wiring between modules. An active shield is provided by a double layer of proportional tubes on all sides of the detector except the bottom (see Fig. 6). A summary of the detector parameters is given in Table II.

The alternative drifting scheme using cylindrical drift spaces is shown in Fig. 7, where the ends of an array of drift columns is seen through the crossed anode wires and cathode strips used to detect the drifting electrons. One possible implementation is shown in Fig. 8, where the drift columns are formed by a stack of steel plates with punched holes that line up. The plates are connected to an external divider chain, so that the plates are the mass of the detector and also provide the drift electric field.[4] Another possibility being investigated is the use of dielectric sleeves in cylindrical holes that would charge up to provide the correct drift field by the mechanism investigated by the Manchester group.[5]

Electronics for readout and triggering are shown schematically in Fig. 9. Wire or cathode signals from the four quadrants of the detector are summed and the time history read out by one flash digitizer and memory combination. This system takes advantage of the confinement of a nucleon decay event to a small portion of the detector, allowing the sharing of electronics. Latches

record which wires or cathodes are active and count active signals to form a trigger for readout.

Sensitivity and Background Rejection

Substantial Monte Carlo calculations have been made, simulating nucleon decay events as well as backgrounds from neutrino interactions and other sources. Examples of nucleon decay events are shown in Figs. 10 and 11, and neutrino interactions are shown in Figs. 12 and 13. Typical nucleon decay modes (e.g. $e^+\pi^0$) show 60 drift chamber measurements. Energy resolution for modes with showering particles is $\sigma_E/E = 0.21$.

An important result from our Monte Carlo calculations is that the Soudan 2 detector has the ability, from ionization measurements, to determine the direction of most tracks. For muons from nucleon decay, we find that the direction is correctly determined in 90% of the cases. For pions, the possibility of hard scattering interferes with the use of ionization measurements, but if the approximately 25% of the tracks that show large angle scatters are removed, direction can be determined correctly for 85% of the remaining tracks. Even for the K^+ from the supersymmetric $K^+\nu_\tau$ decay mode, the direction can be correctly determined for 63% of the tracks. This ability to determine direction by ionization measurements has been demonstrated, with slightly lower efficiency, with a test module of the Soudan 1 detector operated in a test beam of μ's and π's.

Sensitivity to common nucleon decay modes, as determined from Monte Carlo calculations, is summarized in Table III for the 1000-ton stage of the detector. The result is that for SU(5) branching ratios and a lifetime of 10^{32} years, Soudan 2 could expect to identify 1-2 nucleon decay events per year, after all cuts have been made to eliminate background. Background calculations show less than 0.5 event/year from neutrino interactions and less than 0.1 event/year induced by cosmic muons that will pass our cuts for nucleon decay.

Summary

Soudan 2 will continue the Nucleon Decay Program in the Soudan mine with a detector of mass initially 1000 tons, later 5000 tons. Fine-grained tracking and ionization measurements will give it the ability to observe all tracks from a decay and to determine the particle type and direction for most tracks. The sensitivity of the 1000-ton detector to nucleon decay, as determined by Monte Carlo simulations of nucleon decay and background processes, is 10^{32} years.

References

1. J. Bartelt et al., Univ. Minnesota preprint COO-1764-410.
2. L. E. Price et al., IEEE Trans. Nucl. Sci. NS-29, 383 (1982).
3. W. W. M. Allison et al. Nucl. Instru. and Methods 119, 499 (1974).
4. This design is similar to one described in H. G. Fischer and O. Ullaland, IEEE Trans. Nucl. Sci. NS-27, 38 (1980).
5. J. Allison et al., Univ. Manchester Report MC 82/33 (EXP).

Table I

THE SOUDAN NUCLEON DECAY COLLABORATION

J. Bartelt, H. Courant, K. Heller, M. Marshak, E. Peterson
K. Ruddick, M. Shupe

University of Minnesota

D. Ayres, K. Coover, J. Dawson, T. Fields, N. Hill
D. Jankowski, E. May, L. Price

Argonne National Laboratory

W. Allison, C. Brooks, J. Cobb, D. Perkins, B. Saitta

Oxford University

Table II

Parameters of the Soudan 2 Planar Drift-Chamber Detector

Depth:	2150 ft = 2000 meters of water equivalent
Active Volume:	10 m × 10 m × 5 m = 500 m^3
Total Mass:	1000 metric tons = 6×10^{32} nucleons
Fiducial Mass:	650 metric tons = 3.9×10^{32} nucleons
Average Density:	2.0 g/cm^3
Radiation Length:	1.76 cm (iron), 7.04 cm (average)
Nuclear Absorption Length: (high energy)	17.1 cm (iron), 68.4 cm (average)
Composition of Detector (by weight)	88.6% Iron 10.5% Carbon 0.9% Hydrogen
Drift Chamber Module:	5.0 m long × 50 cm wide × 1.0 cm gap
Maximum Drift Time:	50μsec (for 10 kV/50 cm drift field)
Spatial Resolution:	±2 mm
Energy Resolution ($p \to e^+\pi^0$):	±21%
Chamber Arrangement:	Twenty 5 m × 5 m × 1 m modules, each with 500 chambers = 10,000 chambers total, read out by 10,000 anodes and 10,000 cathode strips.
Active Shield:	Proportional tubes on the top and four sides, 1200 tubes total.

Table III

Monte Carlo Prediction for the 1000-ton Soudan 2 Sensitivity and Background Rejection. A 10^{32} year nucleon lifetime is assumed, and only decays and backgrounds which produce three or more tracks are considered.

I. Nucleon-decay detection efficiency

Mode	Escape from Parent Nucleus	Event Recognition	SU(5) B.R.	Detected Events in 5 Years
$p \to e^+\pi^0$	0.75	0.50	30%	1.1
$p \to e^+\rho^0$	0.56	0.50	25%	0.7
$p \to e^+\eta$	0.90	0.50	10%	0.4
$p \to \mu^+K^0$	0.90	0.35	10%	0.3
$p \to e^+\omega$	0.90	1.00	5%	0.4
$n \to e^+\rho^-$	0.56	0.90	35%	1.8
$p \to K^+\nu_\tau$	0.90	0.31	0%	0.0
			Total	4.7

II. Background rejection

A. Techniques
- Proportional-tube cosmic-ray shield on five sides.
- 50-cm fiducial-mass depth on all sides.
- Visible energy (no. cells hit, total ionization).
- Topology, energy balance (depends on vertex identification).

B. Results
- Direct muons: 6×10^6/year $\to \sim 0$/year.
- Muons + rock $\to$ isolated neutrons: 120 year $\to \leq 0.1$/year.
- Neutrino interactions in the detector: 200/year
  - $\to$ 68/year for 3-track events.
  - $\to$ 0.5/year after cuts on energy and topology.

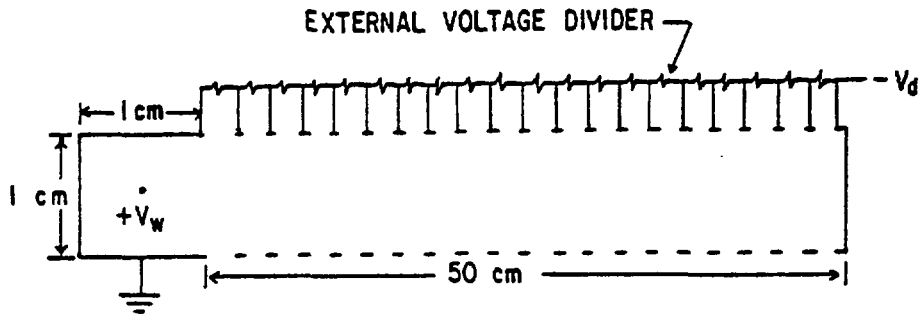

Fig. 1 Cross section of prototype drift chamber with 50-cm drift region. The drift field is shaped by the drift electrodes connected to an external resistor chain as shown, and also by a continuous film of resistive ink (not shown) that interpolates the potentials between electrodes. The drift-electrode separation was 0.5 cm in the prototype chamber, but will be ~ 2 cm in the final detector.

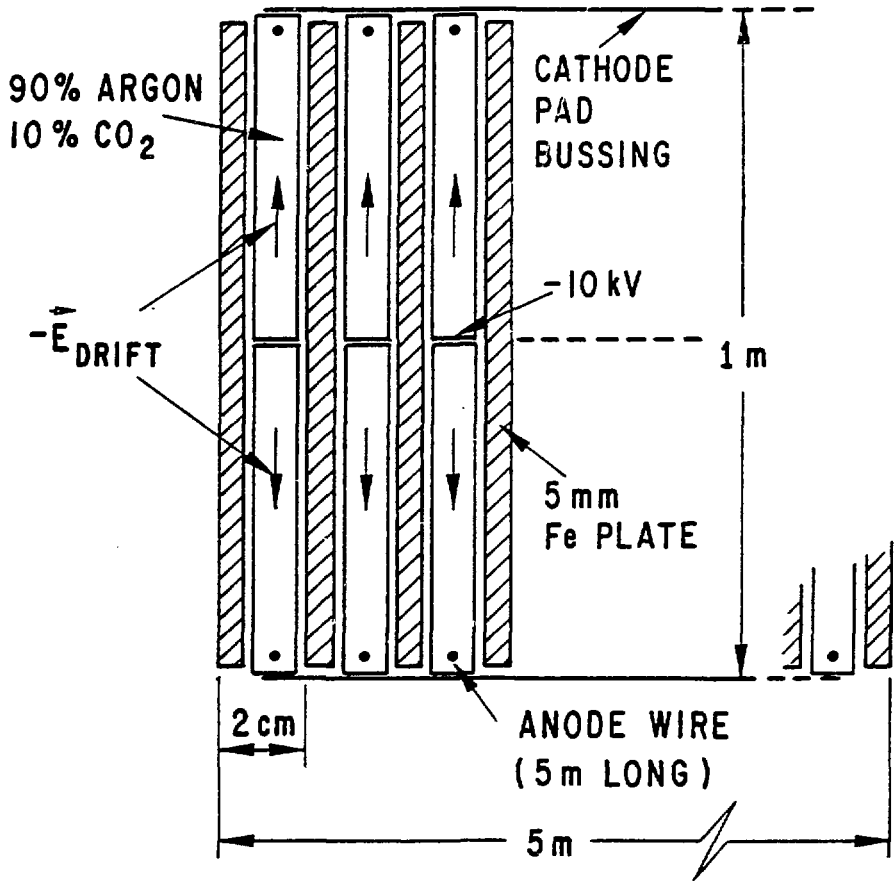

Fig. 2 Schematic representation of the construction of a 50-ton Soudan 2 module from 5-mm thick iron plates and 5 m × 0.5 m × 1 cm planar drift chambers. Note that the horizontal and vertical scales are different. The module contains 500 chambers and is read out by 500 anode wires and 500 cathode strips on the two external 5 m × 5 m faces. The average density is 2 g/cm^3.

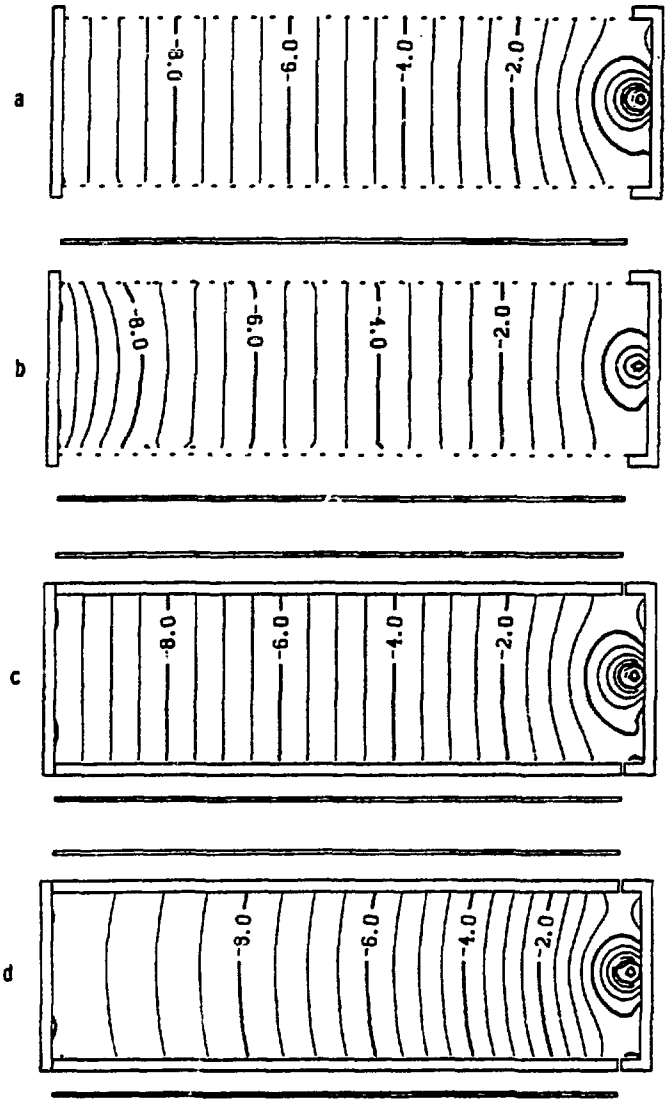

Fig. 3 Equipotential plots in the planar chamber prototype for a) linear resistor chain with discrete electrodes; b) same with nearby grounded plates; c) linear resistor chain with continuous electrode (resistive ink), showing no effect from grounded plate; and d) exponential resistor chain with continuous electrode. The equipotentials are labeled in kilovolts. The concentric circular equipotentials on the right surround the sense wire. Note that vertical and horizontal scales are different. The dimensions are as shown in Fig. 1.

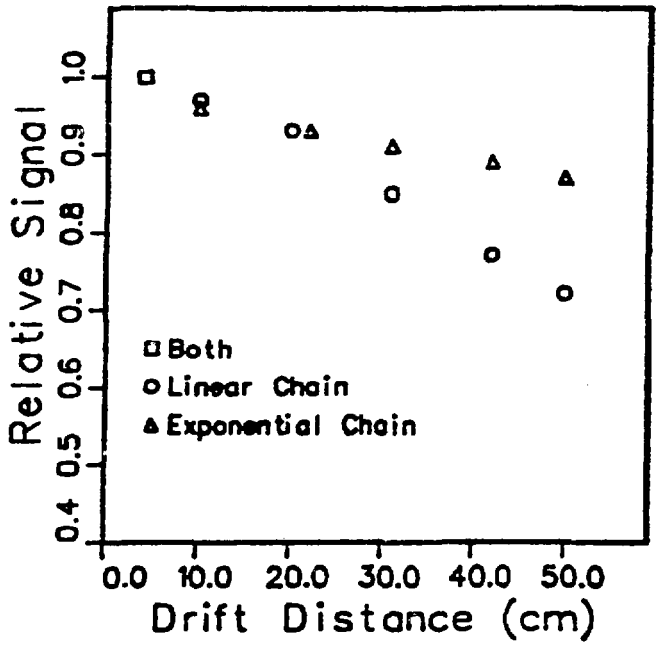

Fig. 4 Signal on sense wire as a function of drift distance for linear and exponential resistor chains. Measured signals have been corrected for attenuation from oxygen contamination and normalized to those obtained with 4 cm drift distance. All measurements are for V_d = 10 kV.

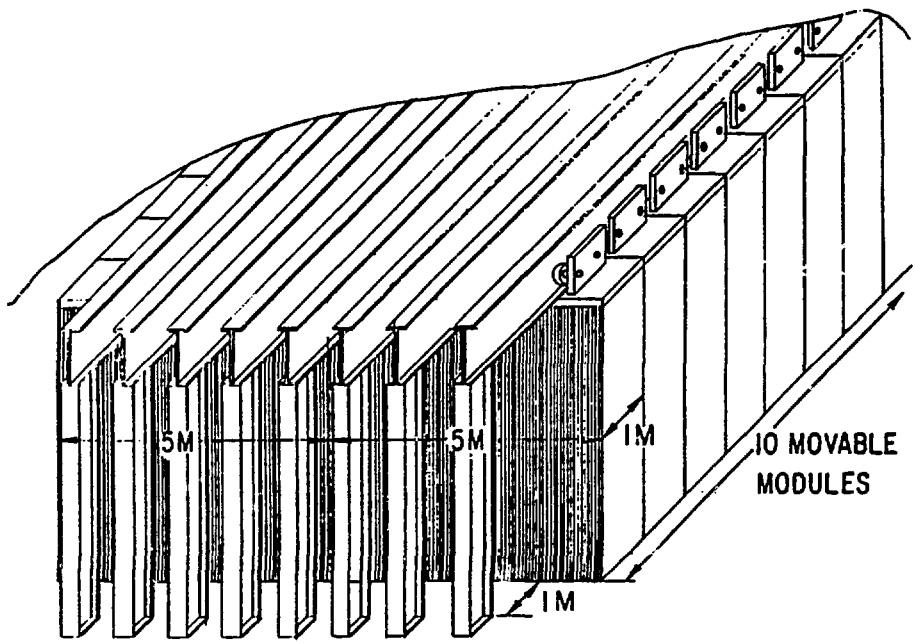

Fig. 5 View of the proposed Soudan 2 nucleon-decay detector. The 1000-ton calorimeter is 10 m × 10 m × 5 m high, and is composed of twenty 50-ton modules which are hung on movable trolleys to allow access to the interior. Each module has two 5 m × 5 m readout faces, each consisting of 250 (vertical) 5-m long anode wires and 250 (horizontal) 5-m long cathode strips. The 500 drift chambers in each module are each 5 m × 50 cm × 1 cm thick and are interleaved with 0.5-cm thick steel plates.

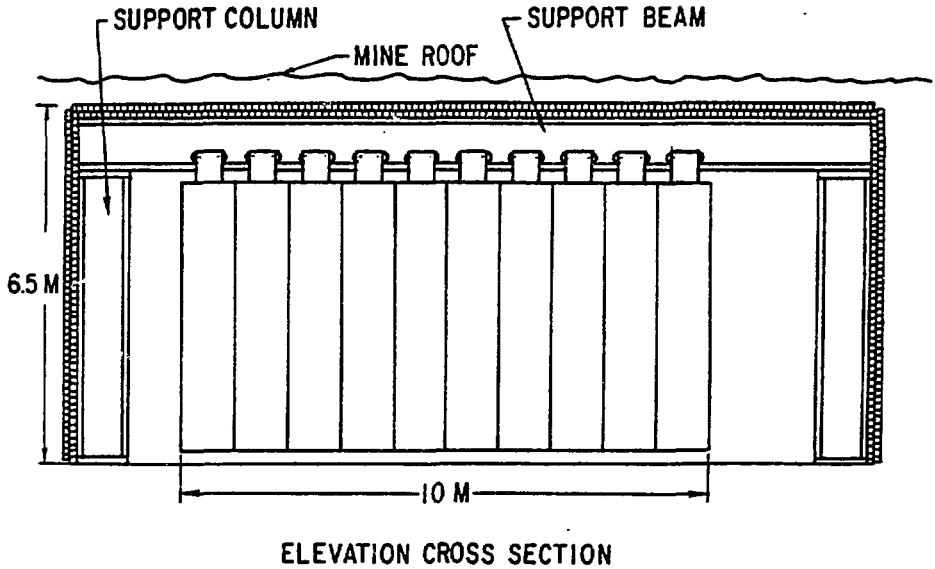

Fig. 6 End view of detector showing three sides of the active shield, which is a double layer of proportional tubes covering all sides but the bottom.

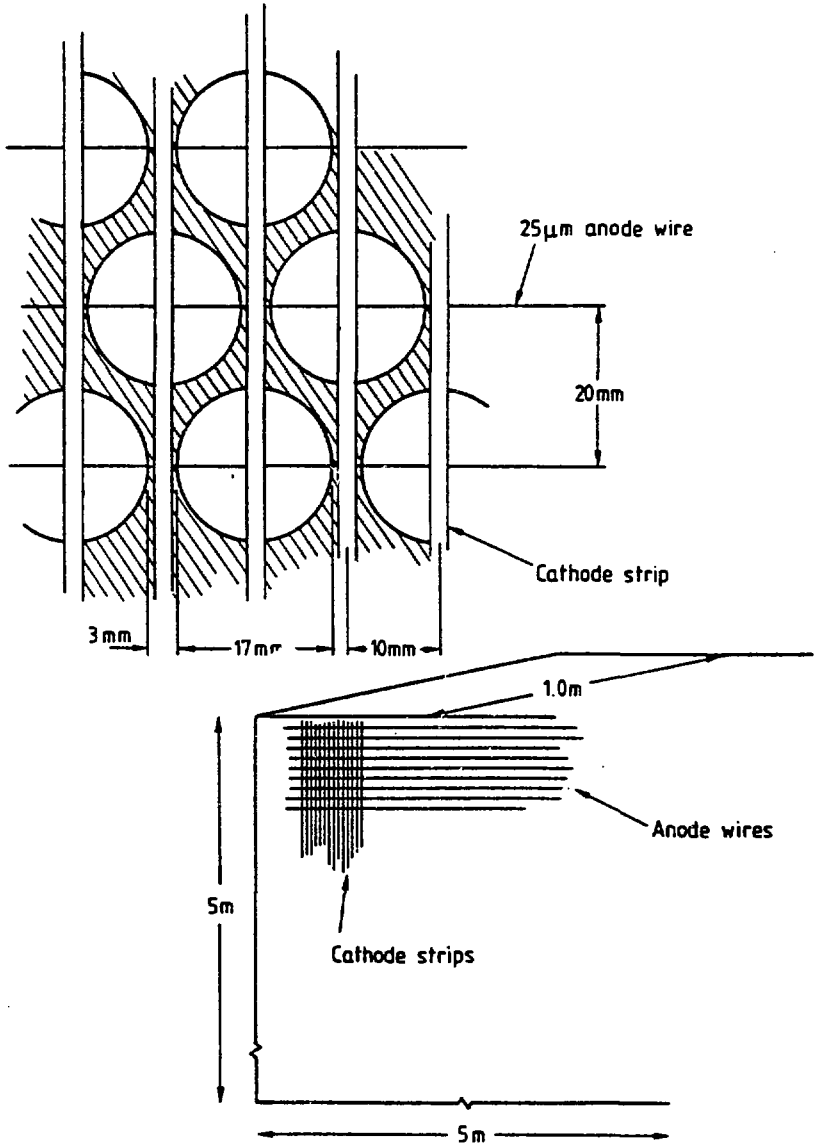

Fig. 7 End view of the readout plane for cylindrical drift columns. The en
of each drift column is read out by an anode wire and a cathode
strip, each of which serves many other drift columns as well.

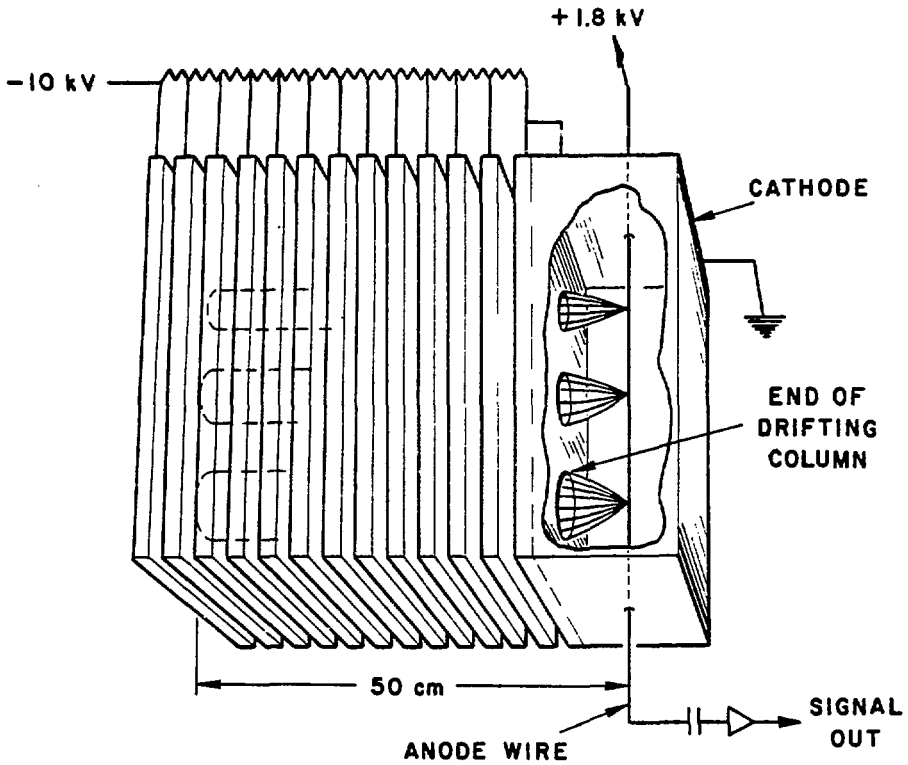

Fig. 8 Schematic drawing of a prototype drift chamber using cylindrical columns. The actual chamber consists of 300 aluminum plates and has 50-cm long drift columns with diameters of 1 cm, 2 cm, and 3 cm. Drift field lines emerging from the columns end on the anode wire, as shown. Slots (not shown) have been cut in the plates at 10-cm intervals to allow testing with a radioactive beta source. The chamber has been successfully operated with 90% argon, 10% CO_2, and a 200 V/cm drift field.

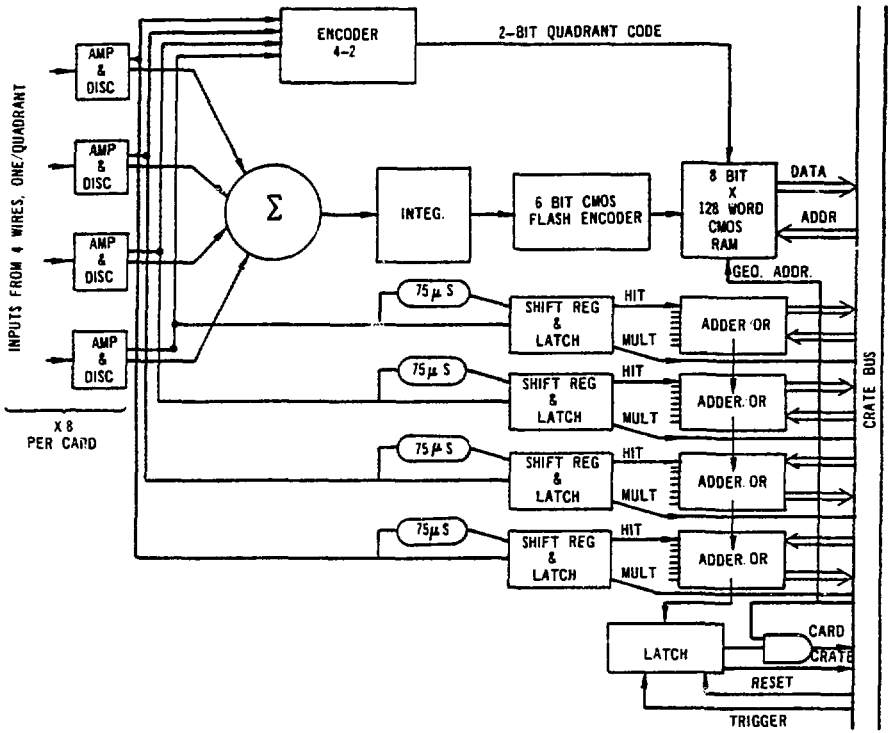

Fig. 9 Electronic logic for a Soudan 2 anode-wire card, containing 8 channels of digitizing flash encoders and CMOS RAM's for 32 anode wires. The encoder stores a 2-bit word in the RAM which identifies the quadrant containing the chamber with data. The lower part of the figure shows the trigger logic and the "data-on-card" and "data-in-crate" logic for the sparse data scan. Cathode-strip electronics are similar, but have no trigger-logic circuitry.

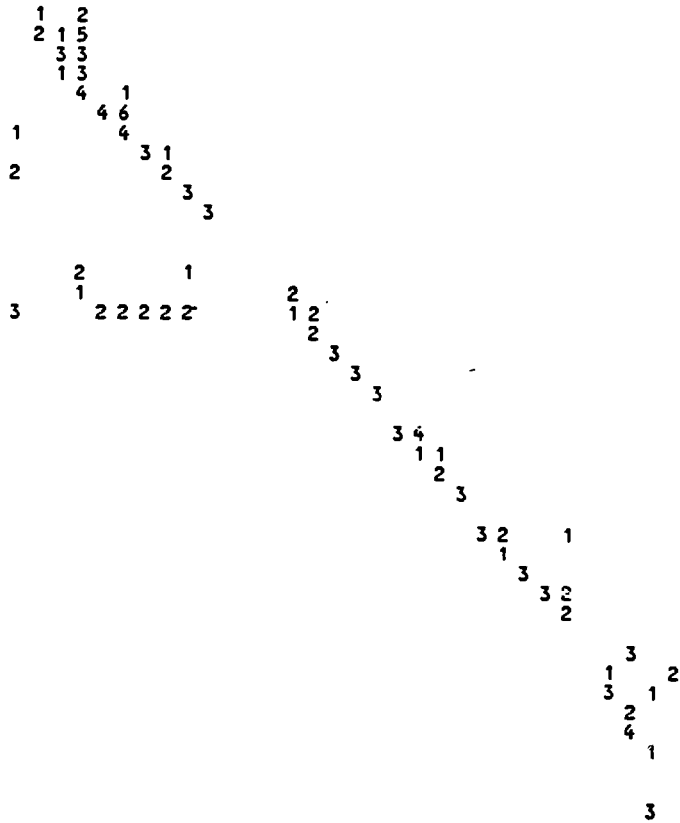

Fig. 10 Simulated drift-chamber data for a $p \to e^{+}\pi^{0} \to e^{+}\gamma\gamma$ decay event. The calorimeter plates are vertical in this view. The chambers are 2 cm apart (horizontal scale). The numbers within each (vertical) chamber give the relative ionization deposited in 1-cm × 1-cm × 2-cm "cells".

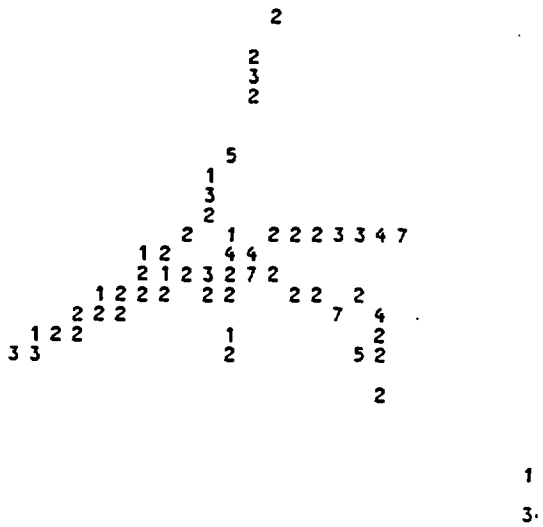

Fig. 11 Simulated $n \to e^+\rho^- \to e^+\pi^-\pi^0 \to e^+\pi^-\gamma\gamma$ decay. See Fig. 10 for explanation of details.

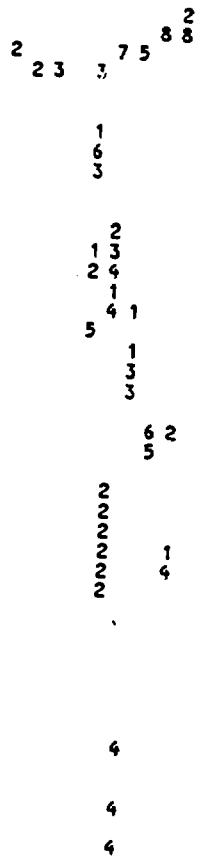

Fig. 12 Simulated $\nu_\mu n \rightarrow \mu^- \pi^o p$ interaction. See Fig. 10 for explanation of details.

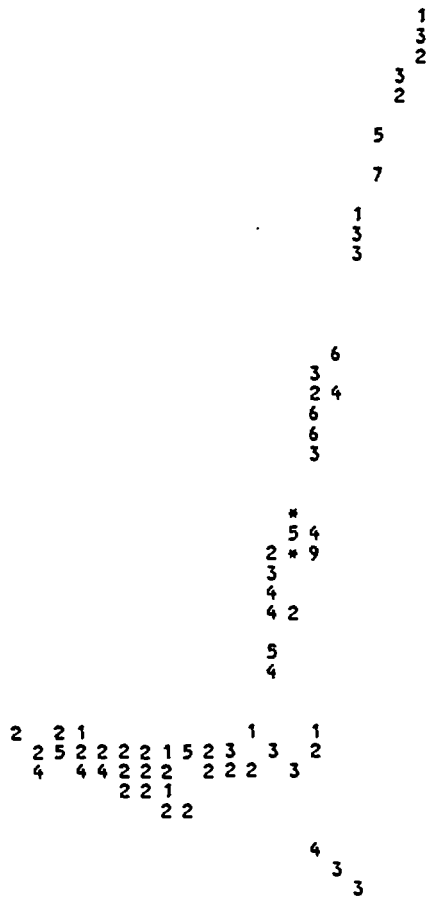

Fig. 13 Simulated $\nu_e p \rightarrow e^- \pi^+ p$ interaction. See Fig. 10 for explanation of details.

DISCLAIMER

This report was prepared as an account of work sponsored by an agency of the United States Government. Neither the United States Government nor any agency thereof, nor any of their employees, makes any warranty, express or implied, or assumes any legal liability or responsibility for the accuracy, completeness, or usefulness of any information, apparatus, product, or process disclosed, or represents that its use would not infringe privately owned rights. Reference herein to any specific commercial product, process, or service by trade name, trademark, manufacturer, or otherwise does not necessarily constitute or imply its endorsement, recommendation, or favoring by the United States Government or any agency thereof. The views and opinions of authors expressed herein do not necessarily state or reflect those of the United States Government or any agency thereof.