CONF-8510209--3

FUSION ENGINEERING DESIGN CENTER

CONF-8510209--3

DE86 004783

T. G. BROWN

FUSION ENGINEERING DESIGN CENTER

CONFIGURATION AND STRUCTURAL DESIGN OF COMPACT IGNITION TOKAMAK*

PRESENTED TO

U.S./JAPAN WORKSHOP

ON

NEXT STEP MACHINE DESIGN

NAKA FUSION RESEARCH ESTABLISHMENT, JAERI

JAPAN

OCTOBER 21-15, 1985

*RESEARCH SPONSORED BY THE OFFICE OF FUSION ENERGY, U.S. DEPARTMENT OF ENERGY, UNDER CONTRACT NO. DE-AC05-84OR21400 WITH MARTIN MARIETTA ENERGY SYSTEMS, INC.

By acceptance of this article, the publisher or recipient acknowledges the U.S. Government's right to retain a nonexclusive, royalty-free license in and to any copyright covering the article.

MASTER

DISTRIBUTION OF THIS DOCUMENT IS UNLIMITED

KEY FEATURES OF REF DESIGN

	IGNITOR	ISP 0424	LITE
NUMBER OF COILS	CONT.	14	24
TF COILS (COLD-WORKED, HIGH-STRENGTH PLATES)	AG/CU	OFHC	OFHC/ BE/CU
MAGNET COOLING	LN2	LN2	H2O(LN2)
TF SLIP JOINT	NO	YES	NO
TORQUE STRUCTURE	INTERNAL	EXTERNAL	EXTERNAL
PF COILS	EXTERNAL	INTERNAL	EXTERNAL
VACUUM VESSEL	SEGMENTED	1-PIECE	SEGMENTED
NUMBER OF PORTS	12	14	23
WIDTH, M	0.10	0.44	0.22
HEIGHT, M	0.80	0.95	1.3

CONFIGURATION AND STRUCTURAL DESIGN OVERVIEW

- PPPL 0424 DESIGN
- MIT LITE
- IGNITOR 1.01 M REF. DESIGN
  1.08 M PRESS CONFIGURATION

PPPL 0424 REF DESIGN

FUSION ENGINEERING DESIGN CENTER

PPPL 0242 CONFIGURATION

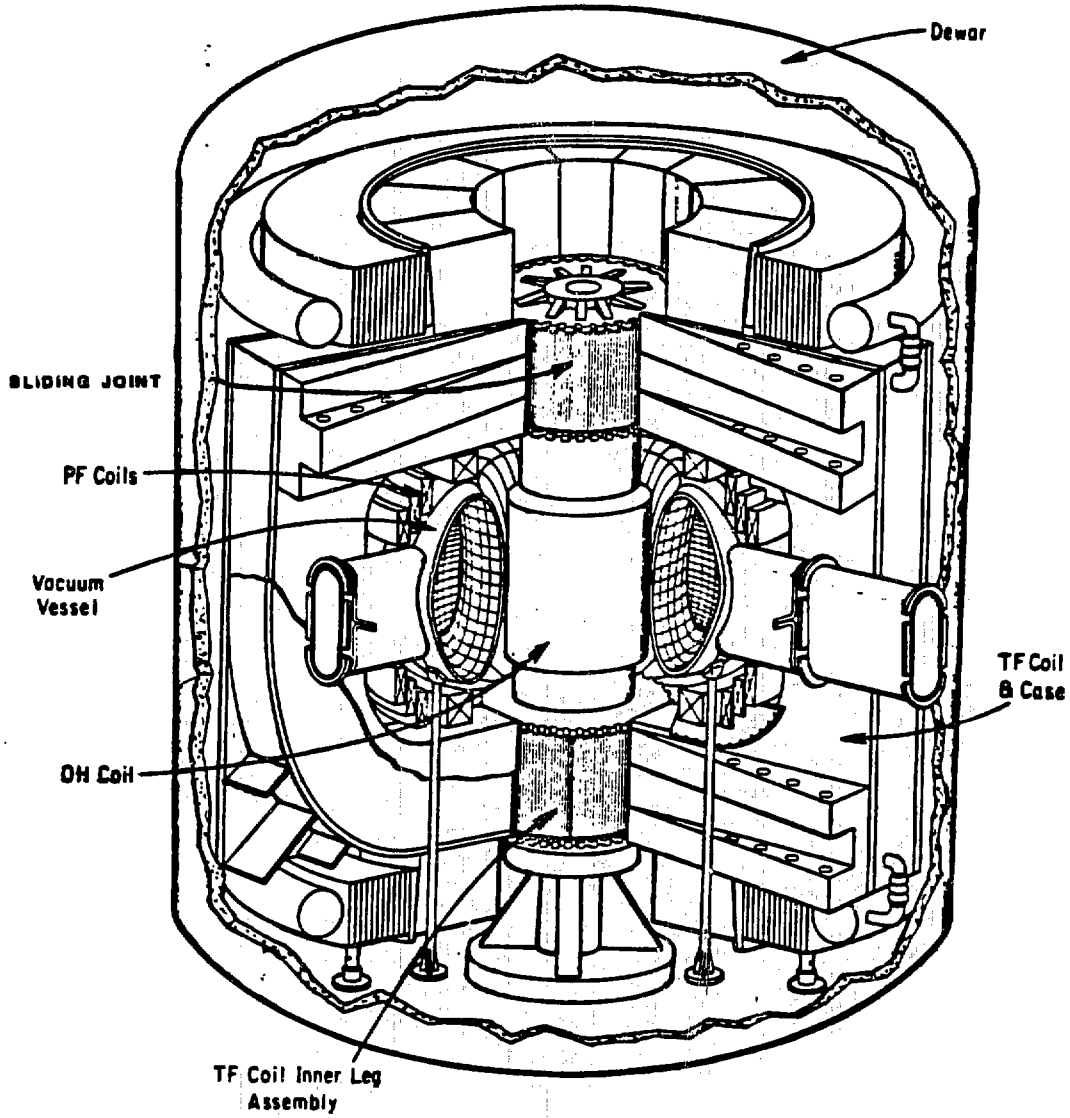

TF COIL SLIDING LAP JOINT

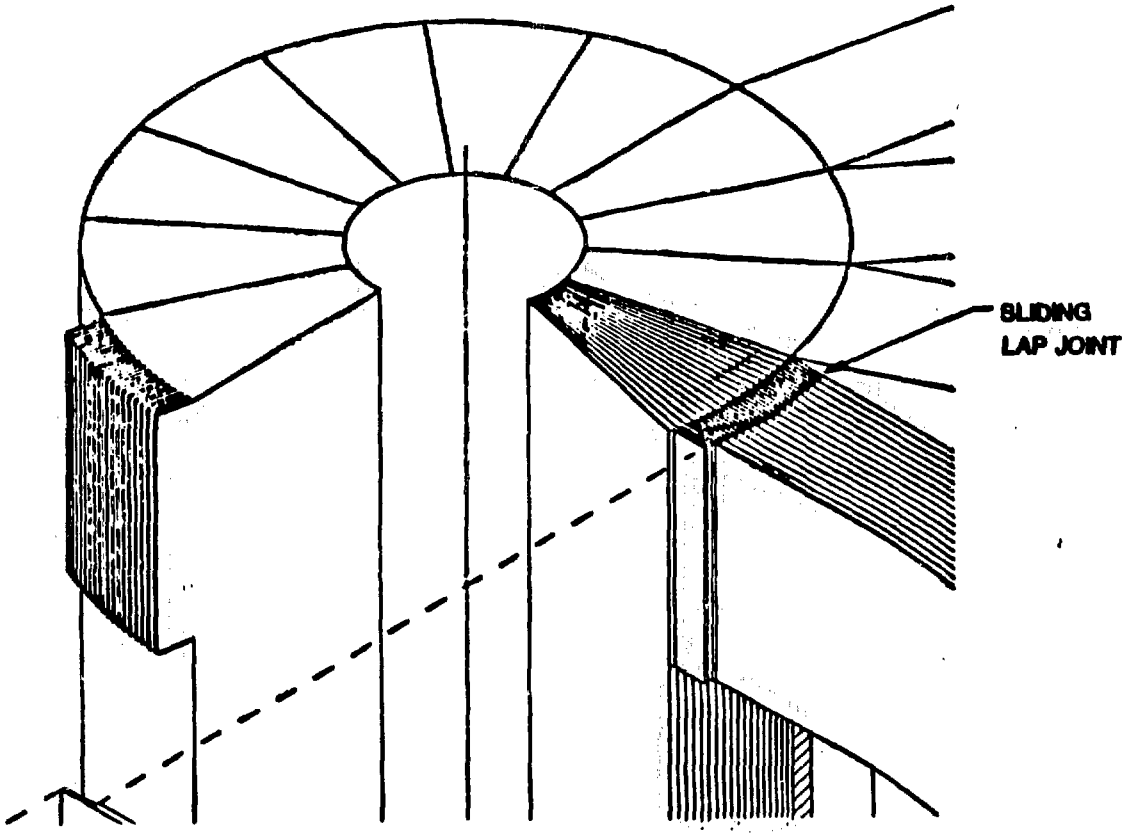

TF COIL WITH SLIDING JOINT

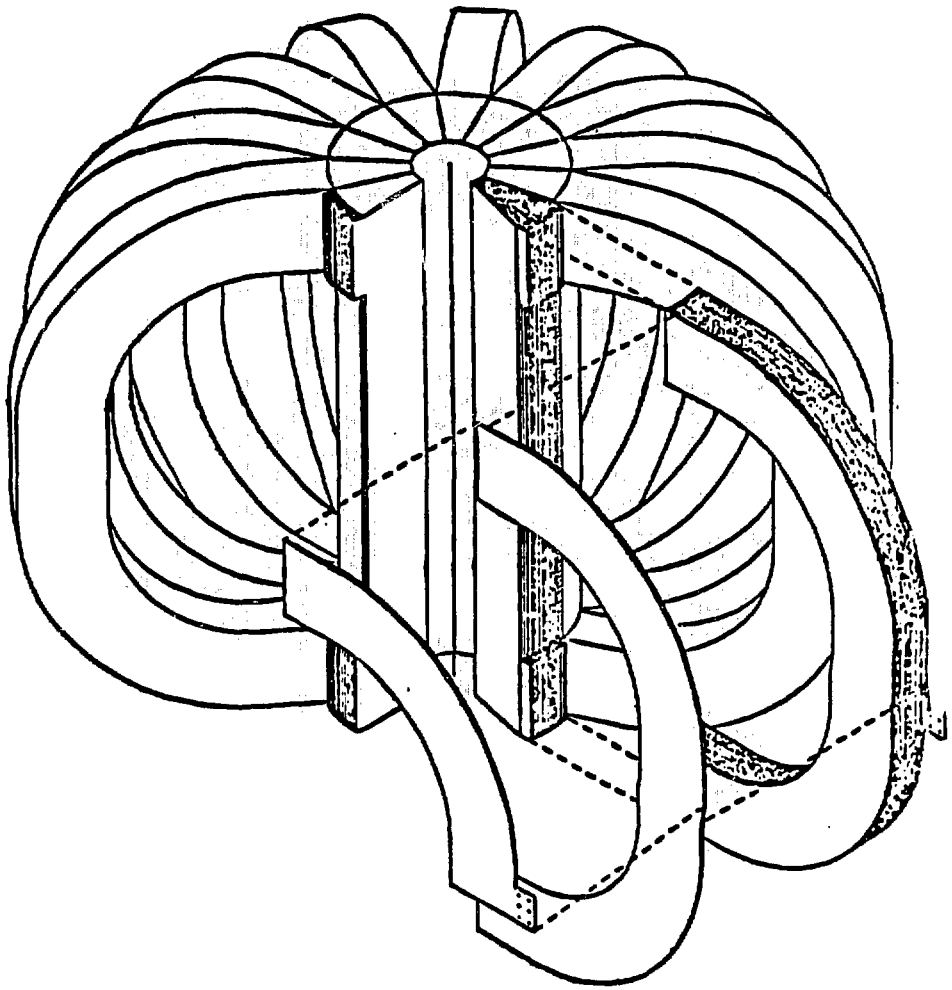

SLIDING JOINT - WESTINGHOUSE

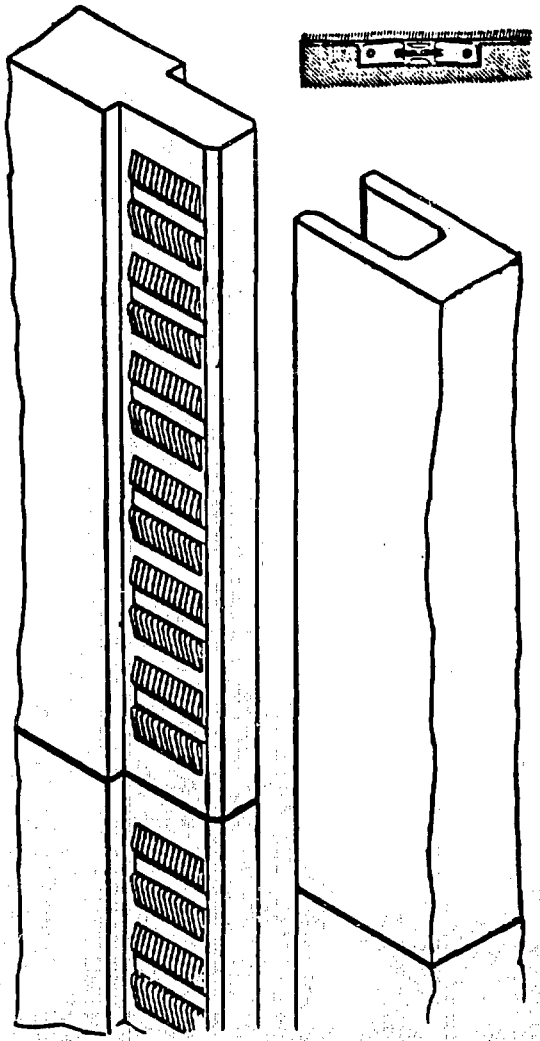

SLIDING JOINT - ALCATOR TYPE

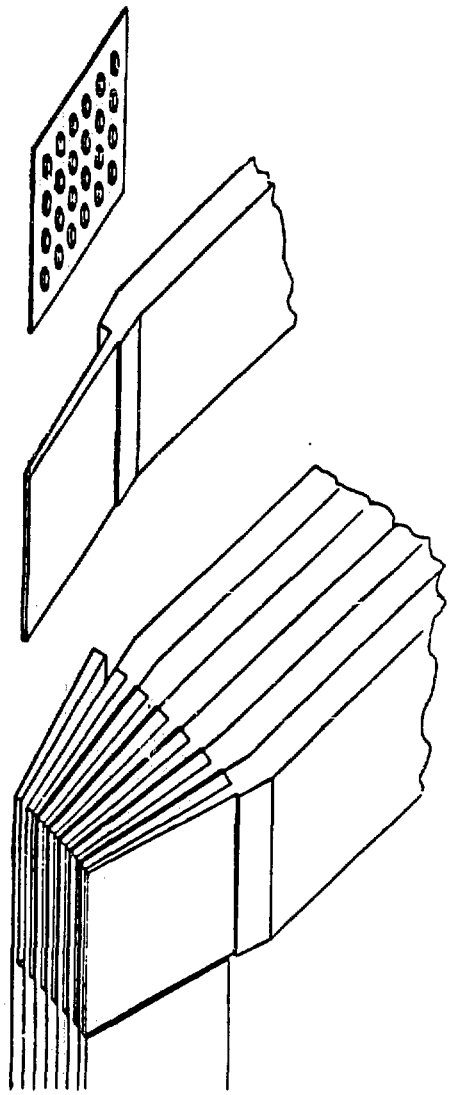

TF SHAPE BASED ON "BOW" COIL CONCEPT

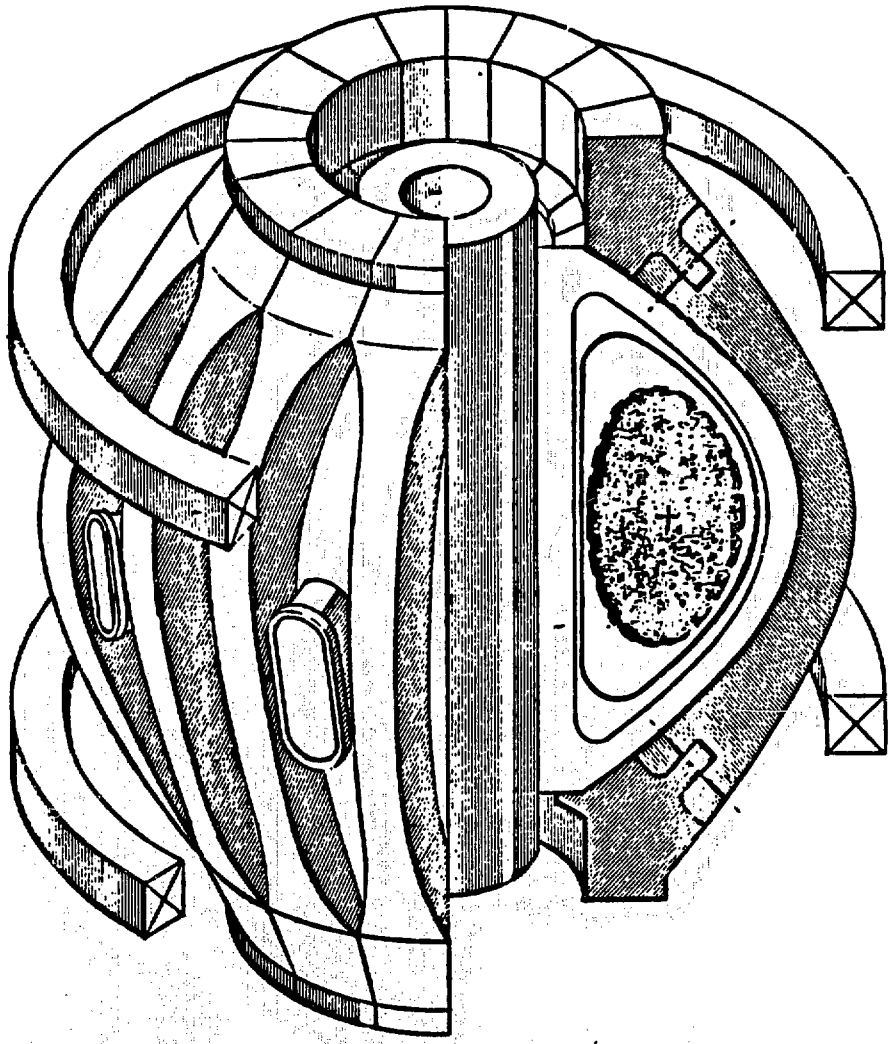

ISP 0424 CONCEPT

STRUCTURAL ANALYSIS

AN AVERAGE STRESS CRITERIA IS ASSUMED:

- LOCAL STRESSES WHICH ARE BEYOND YIELD WILL RESULT IN PLASTIC REDISTRIBUTION TOWARD AN AVERAGE VALUE
- THE AVERAGE STRESS VALUE REPRESENTS THE TRUE LOAD CARRYING CAPACITY OF THE STRUCTURE

COMBINED STRESS CONDITIONS WILL BE EVALUATED USING THE TRESCA STRESS CRITERION

DESIGN ALLOWABLES

- Constrained coils (externally supported)

$$\sigma_{all} \quad \begin{array}{l} < 0.35\ \sigma_Y \\ \text{or} \\ < 0.70\ \sigma_U \end{array}$$

- Self-supported coils

$$\sigma_{all} \quad \begin{array}{l} < 0.67\ \sigma_Y \\ \text{or} \\ < 0.60\ \sigma_U \end{array}$$

- Under both support methods limitations of cyclic stress will be evaluated using physics guideline of:

3×10^3 full field shots
1×10^5 half stress shots

ISP 0424

Principle Features

Sliding joint TF coil, with the majority of tensile load transferred to an external support

Wedged inboard legs, with minor load taken in bucking

Use of unalloyed copper

Partially encased coils with shear panel to support out-of-plane loads

Internal PF coils

Parameters Analyzed

R = 1.62 m

A_P = 0.53 m

B_O = 8.95 T

I_P = 7.83 MA

B_{OH} = 4.2 T

ISP 0424 APPLIED LOADS (8.95 T)

In-plane

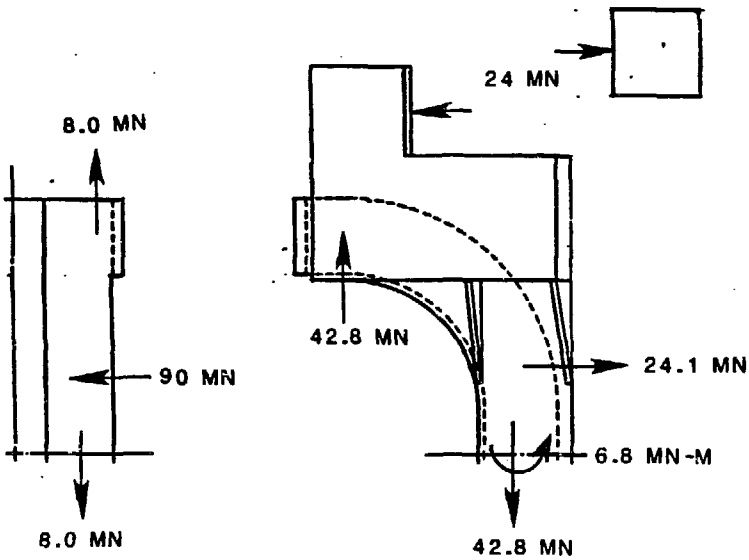

14 TF COILS

72.5 MAT

711 MN VERT. LOAD

Out-of-plane (End of burn)

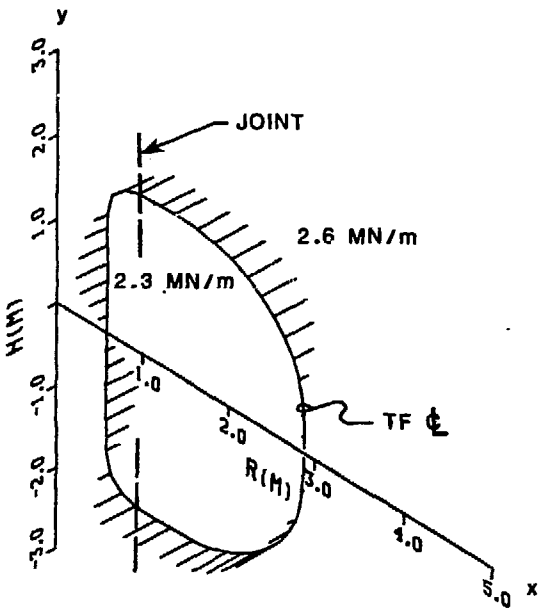

442 MN-M TOTAL Mx

30 MN-M CENTRAL COLUMN TORQUE

ISP 0424; T = 300°K
STRESS SUMMARY - TF THROAT REGION

- ***In-Plane Loading (MPa)***
  - ***Avg. Tensile Stress*** *53*
  - ***Avg. Face Pressure*** *-123*
  - ***Avg. Radial Stress*** *-88*
- ***Out-of-Plane Loading (Startup) (MPa)***
  - ***Torsional Shear Stress*** *17*
  - ***Min. Req'd. Fric. Coef.*** *0.14*

- *Combined Stress (MPa)*

$$\frac{\text{Avg. Tresca Stress}}{\text{Allowable Stress}^{*}} = \frac{183}{231} = 0.79$$

- *Peak Tresca Stress (MPa)* 183

- *Joint Area*
  - *Running Load* 0.14 MN/m
  - *Equivalent Transverse Pressure* 2.1 MPa

* *0.7 TENSILE ULTIMATE CONTROLS USING COPPER 104, T = 300°K*

STRUCTURAL ASSESSMENT - ISP 0424

- ***Demountable coil favors use of internal PF coils which lead to more reasonably-handled out-of-plane loads for divertor case.***

- ***The TF sliding joint unloads tension from the center leg leading to a reduced size machine using conventional copper.***

- ***Reasonable margins exist for in-plane, out-of-plane and OH stresses.***

- ***The sliding joint must be developed to carry the necessary current, and allow slip despite the high transverse pressure due to out-of-plane loads.***

MIT LITE REF DESIGN

MIT LITE GENERAL ARRANGEMENT

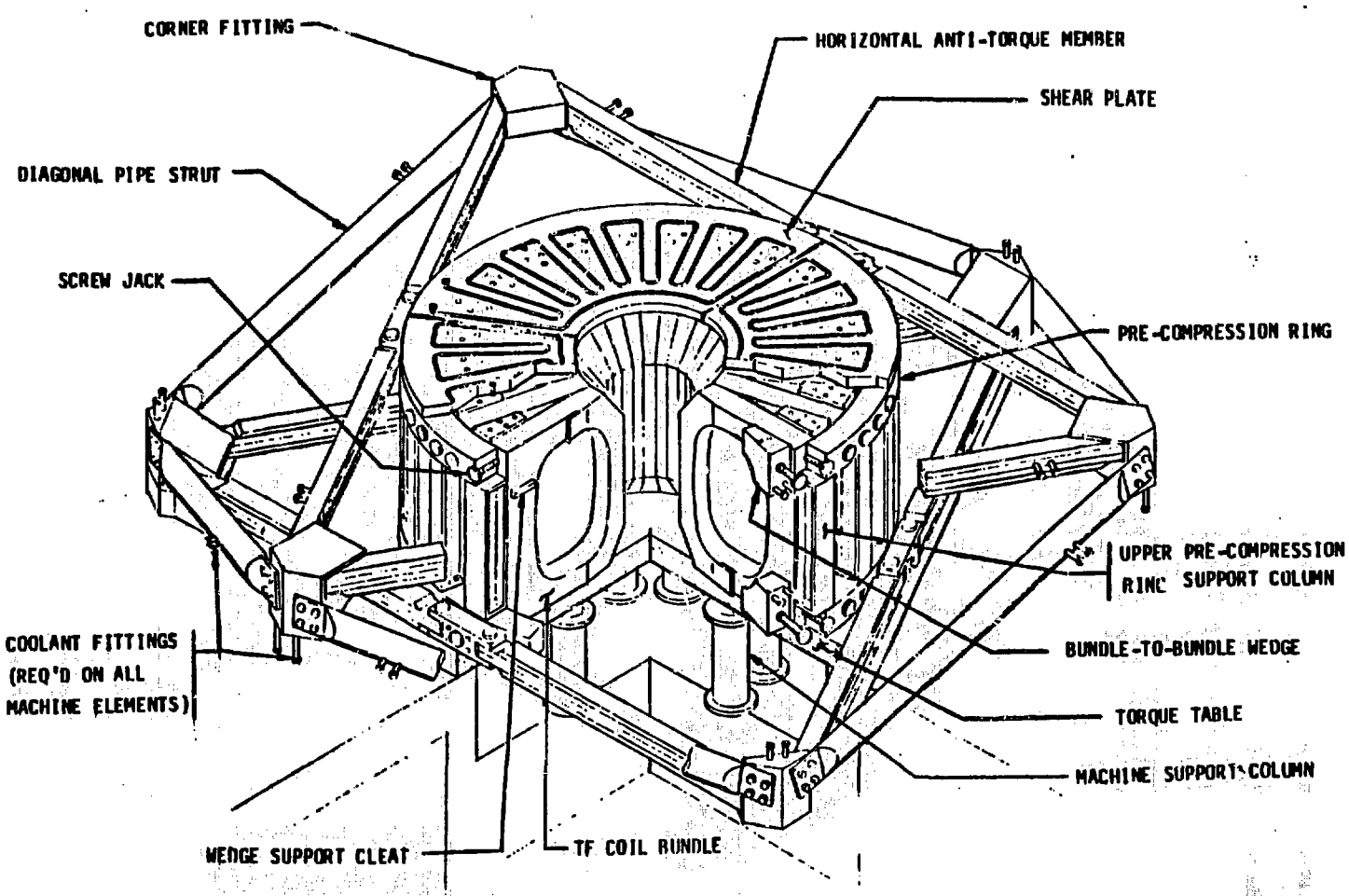

ELEVATION VIEW

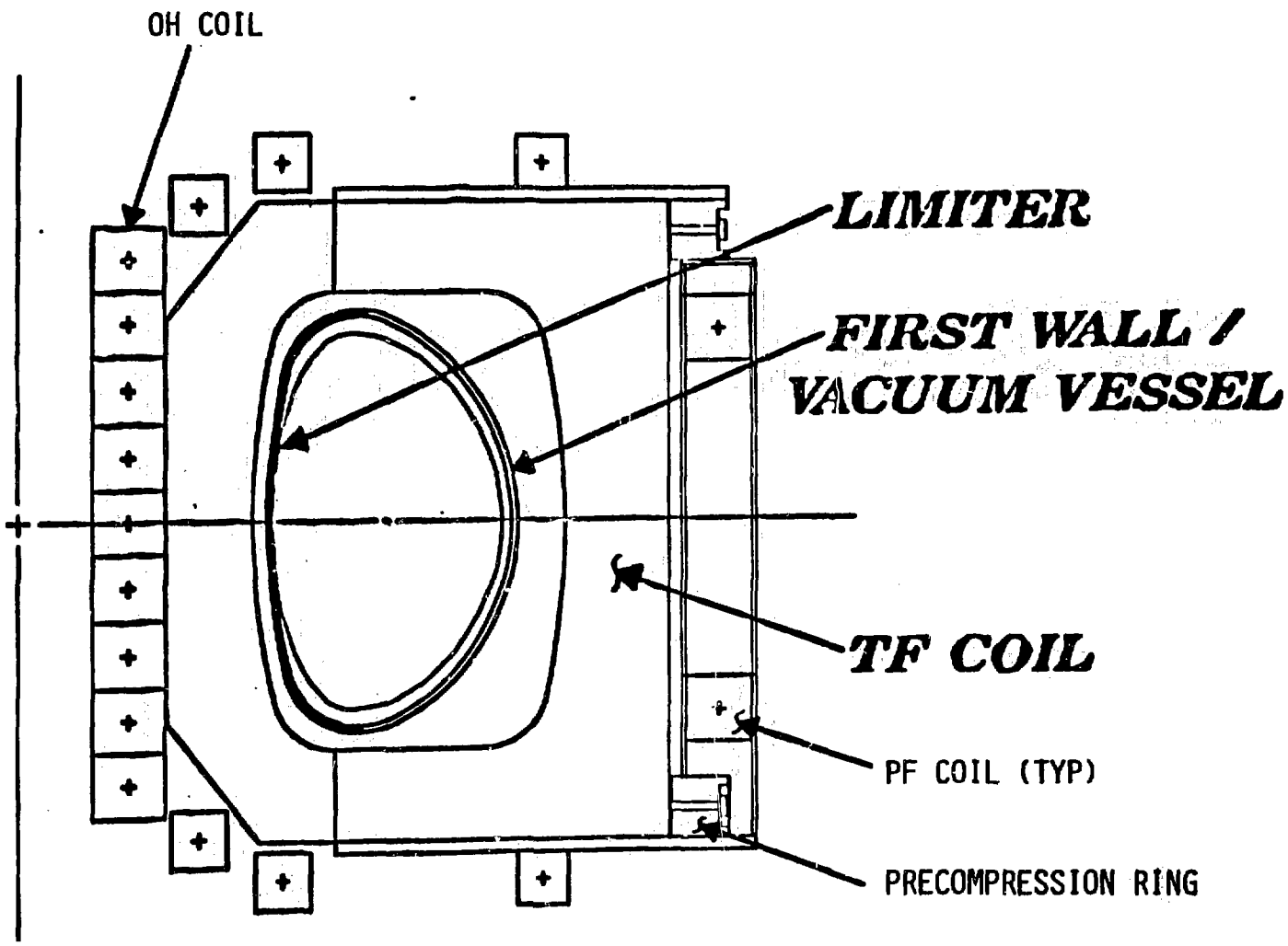

TF BUNCH ARRANGEMENT

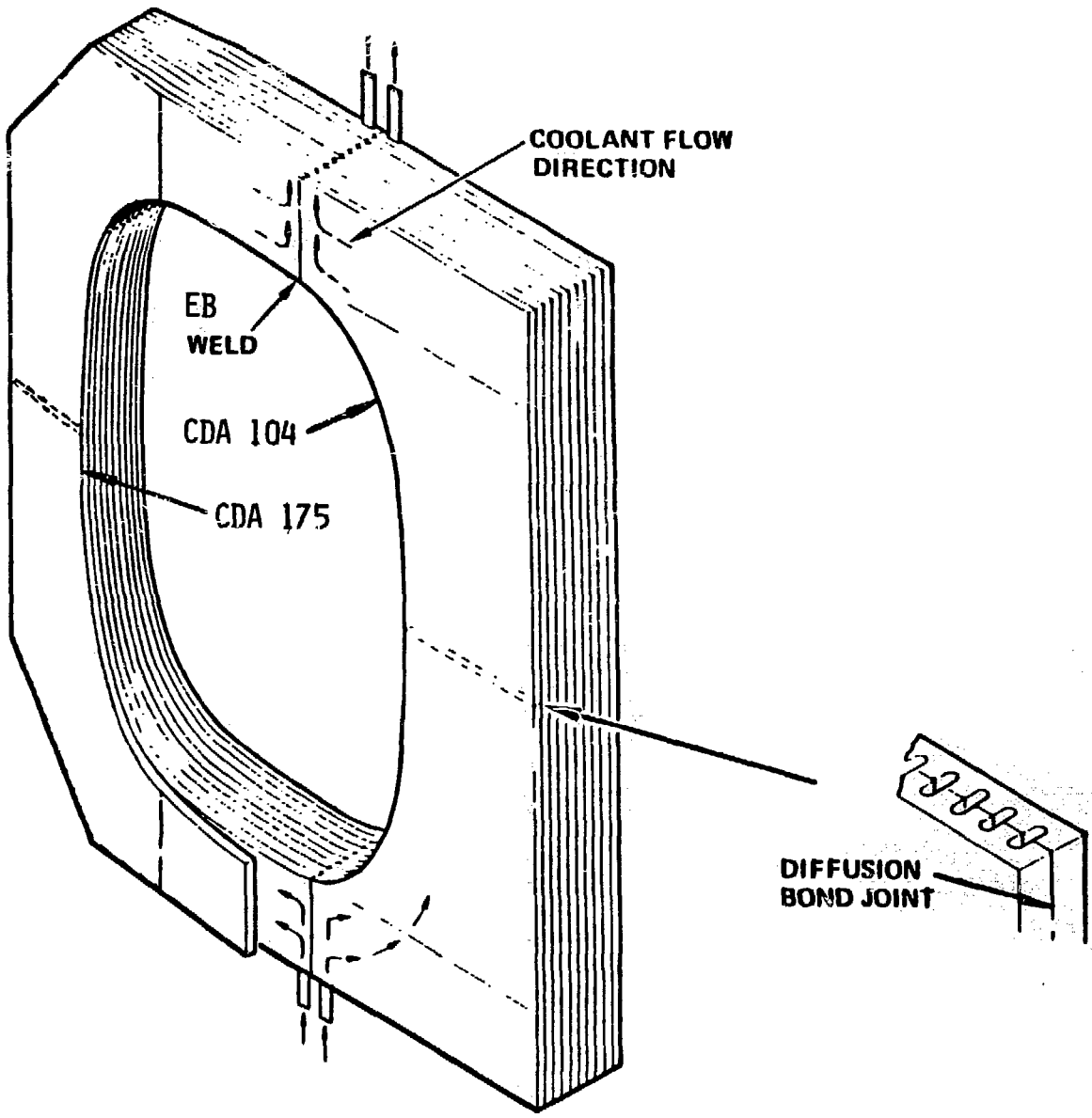

VACUUM VESSEL/FIRST WALL SYSTEM

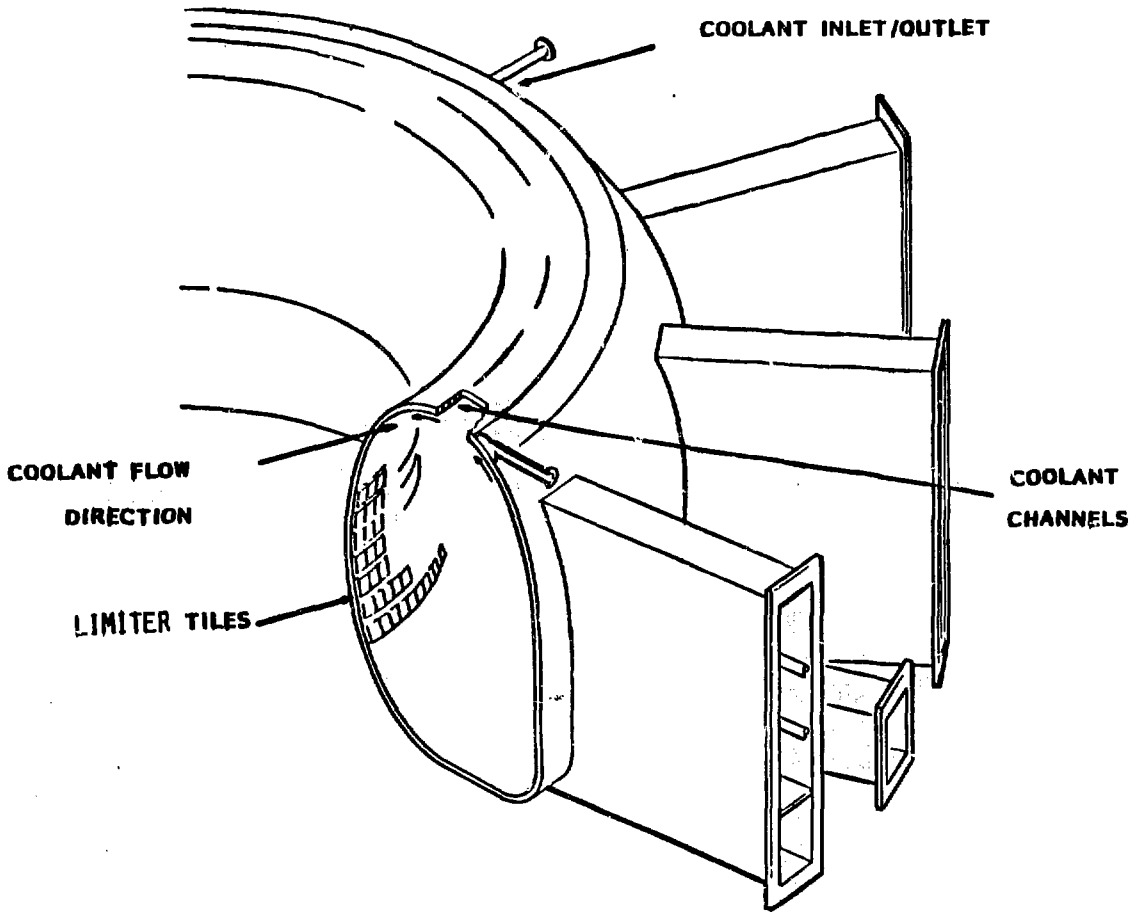

MIT LITE ALTERNATE TORQUE STRUCTURE

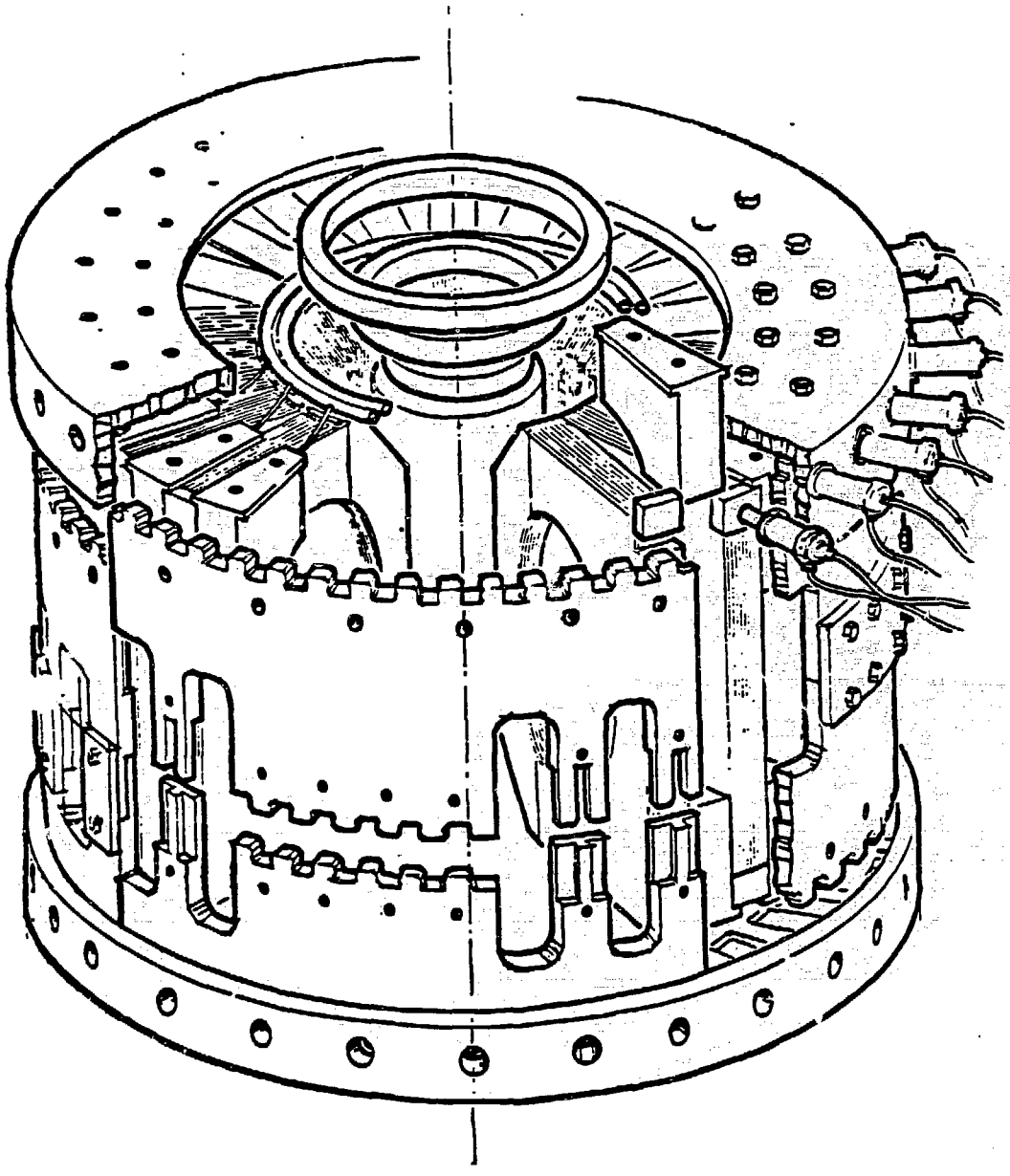

MIT LITE STRUCTURAL ANALYSIS

MIT LITE (1.76 M)

Principle Features

- Self-supported coil against in-plane loads
- Wedged TF innner legs
- Use of Be-Cu alloy in TF in-board legs
- External torque structure
- External PF coils

Parameters Analyzed

$R = 1.76\ M$

$A_P = 0.55\ M$

$B_O = 8.5\ T$

$I_P = 7\ MA$

$B_{OH} = 18.3\ T$

LITE APPLIED LOADS (8.5T)

In-plane

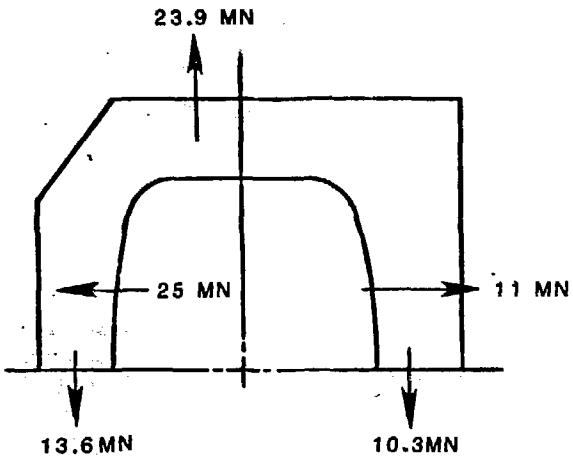

24 TF COILS

74.8 MAT

574 MN VERT. LOAD

Out-of-plane (end of burn)

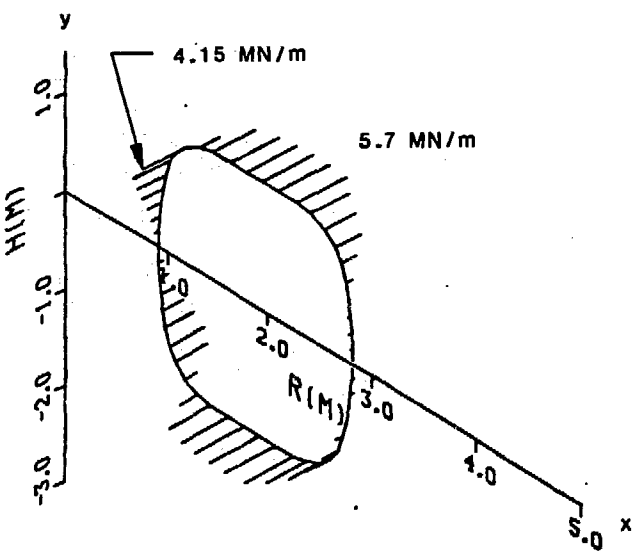

336 MN-M TOTAL Mx

61 MN-M CENTRAL COLUMN TORQUE

LITE - 8.5 T; 300 K
STRESS SUMMARY - TF THROAT REGION

- **In-Plane Loading (MPa)**

Average Tensile Stress	153
Average Face Pressure	-198
Average Radial Stress	-16

- **Out-of-Plane Loading (End of Burn) (MPa)**

Torsional Shear Stress	27
Min. Req'd. Friction Coef.	0.14

- **Combined Stress (MPa)**

$$\frac{\text{Avg. Tresca Stress}}{\text{Allowable Stress}^*} = \frac{355}{517} = 0.69$$

- **Peak Tresca Stress (MPa)** 408

* 0.6 Ultimate Controls, Using Copper 175, T = 300°K

STRUCTURAL ASSESSMENT - LITE

- ***Simple TF structural support of in-plane loads***
- ***Direct structural relationship to ALCATOR data base***
- ***Reasonable margins exist for in-plane, out-of-plane, and OH stresses***
- ***Concept depends on material properties of Be-Cu plate which has a limited data base for these sizes and thicknesses***
- ***Concept requires careful control of plate taper, interface to torque structure, and plate weld detail***

IGNITOR 1.01 M REF DESIGN

REFERENCE DESIGN - ELEVATION VIEW

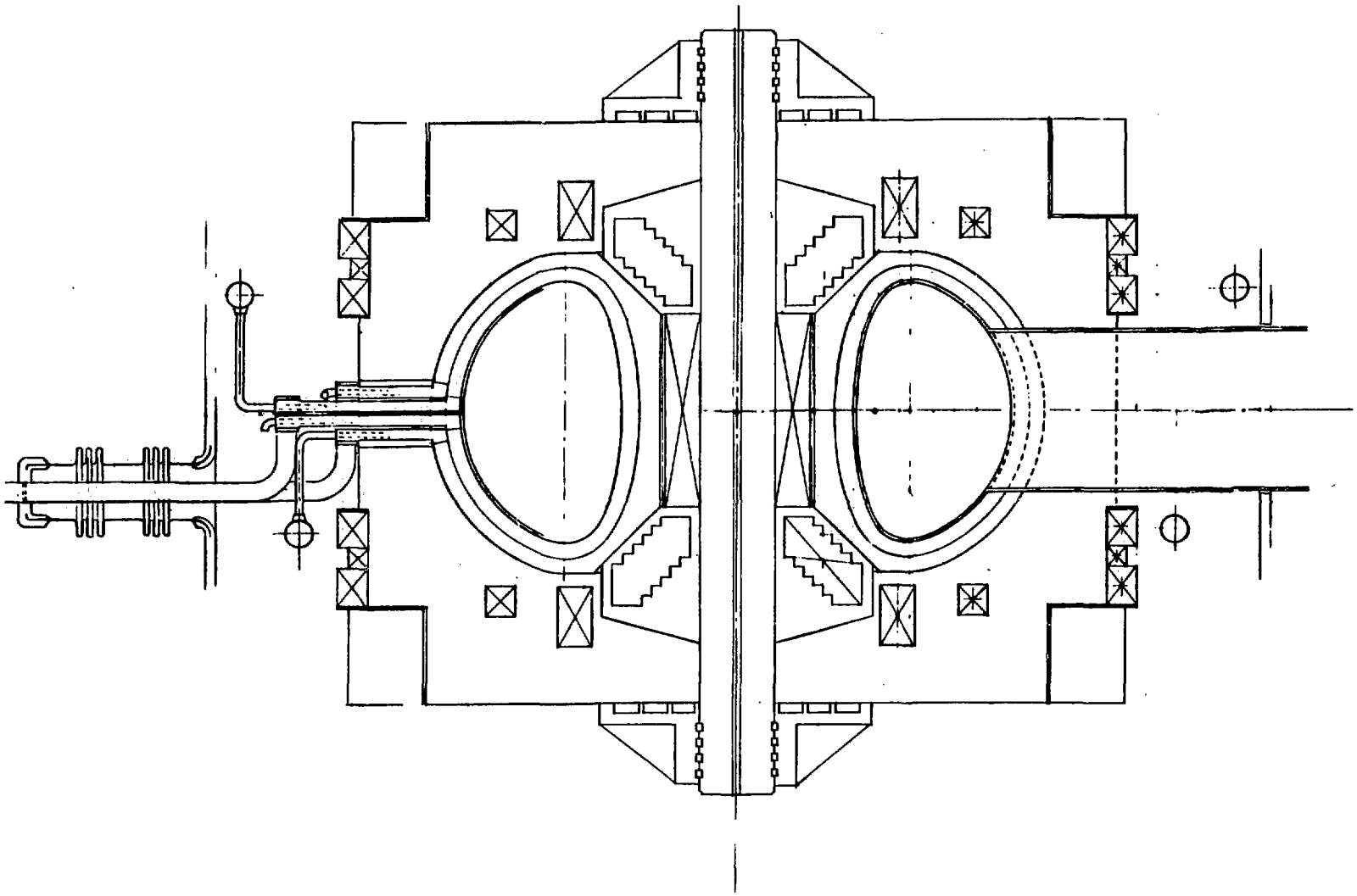

REF DESIGN - ISOMETRIC VIEW

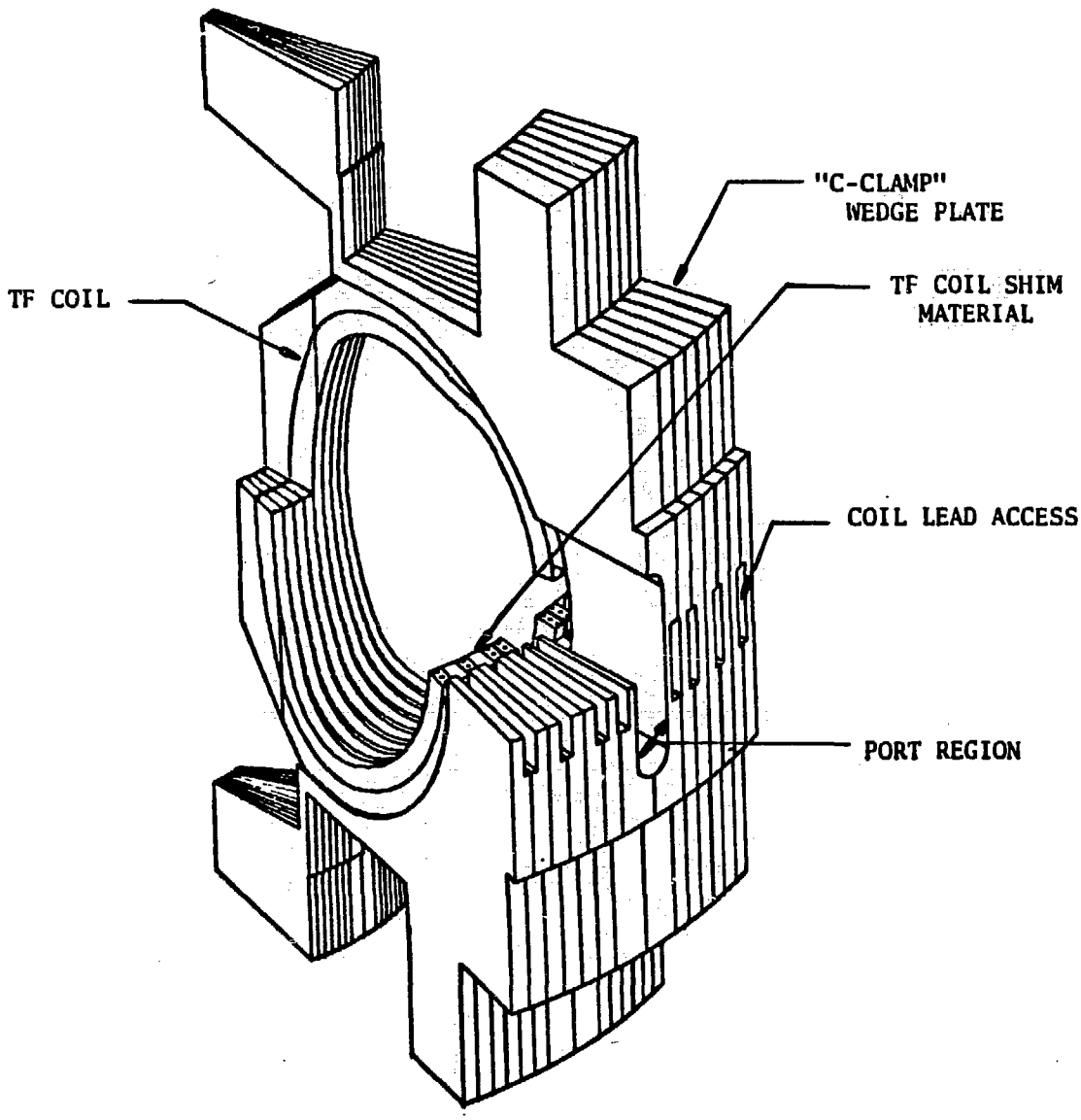

MODIFIED REF DESIGN - 12 TF COILS

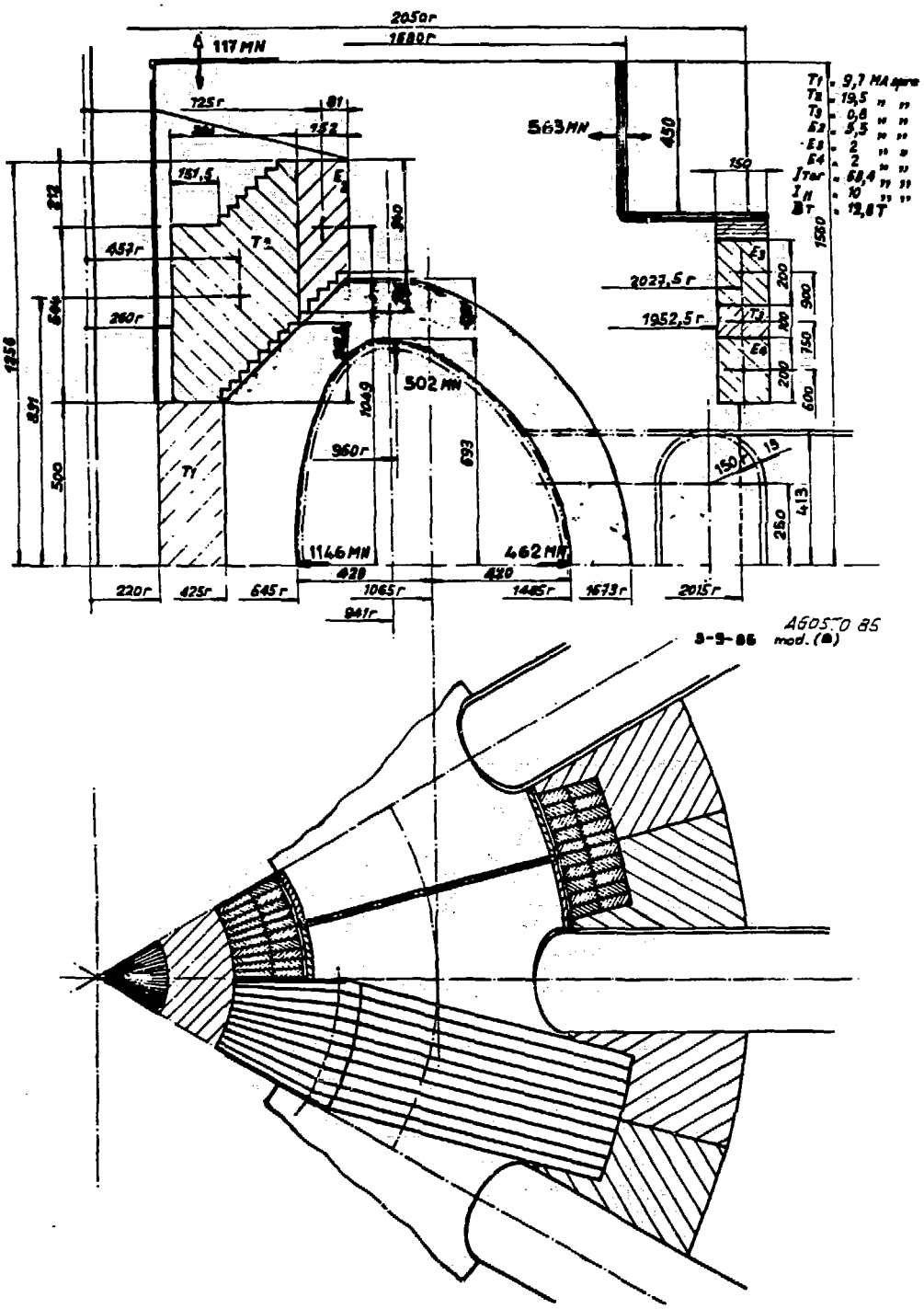

IGNITOR REF DESIGN
STRUCTURAL ANALYSIS

IGNITOR A - JANUARY 1985

Principle Features

Precompression of TF coil inner leg through use of a multi-element external frame

Use of 155 silver bearing copper TF coils

OH solenoid used as bucking cylinder

Out-of-plane load carried through the external frame ''C-clamp'' assembly

PF coils external to the TF, internal to the external structure

Parameters Analyzed

R	=	1.0 m		B_{OH} =	25 T
A_P	=	0.39 m			
B_O	=	12.5 T			
I_P	=	10.0 MA			

IGNITOR APPLIED LOADS (12.5 T)

In-plane

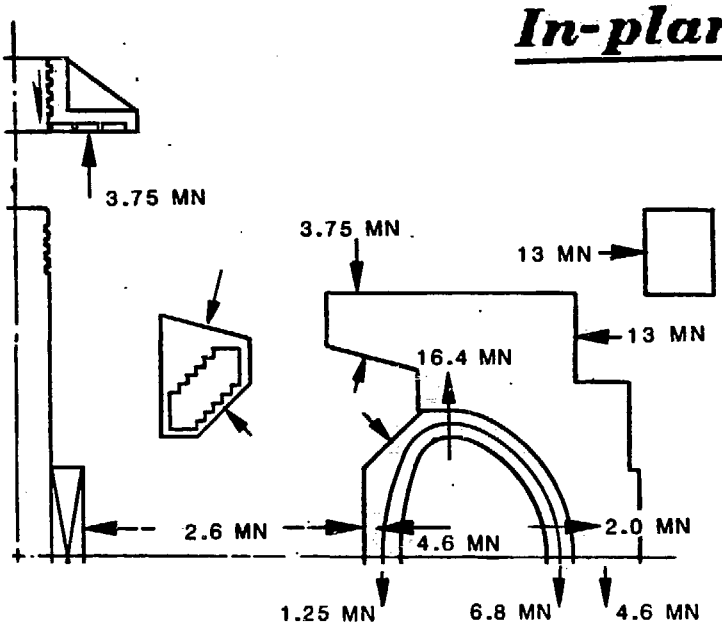

24 TF COILS

63.3 MAT

394 MN VERT. LOAD

Out-of-plane (end-of-burn)

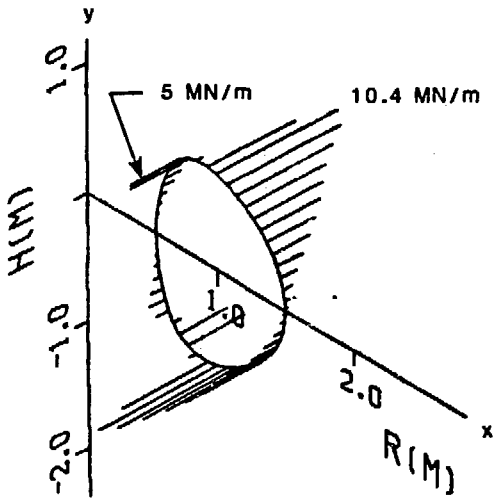

134 MN-M TOTAL Mx

9 MN-M CENTRAL COLUMN TORQUE

IGNITOR A - 12.5 T; 77° K
STRESS SUMMARY - TF THROAT REGION

- **In-Plane Loading (MPa)**
  - Avg. Tensile Stress 49
  - Avg. Face Pressure -172
  - Avg. Radial Stress -121
- **Out-of-Plane Loading**
  - Torsional Shear Stress 28
  - Min. Req'd. Fric. Coef. 0.16
- **Combined Stress**

$$\frac{\text{Avg. Tresca Stress}}{\text{Allowable Stress*}} \qquad \frac{228}{352} = 0.65$$

- **Peak Tresca Stress** 232

* 0.7 Ultimate Controls, Using Copper 155, T = 77° K

REF IGNITOR PRELOAD + TF EMF FORCES

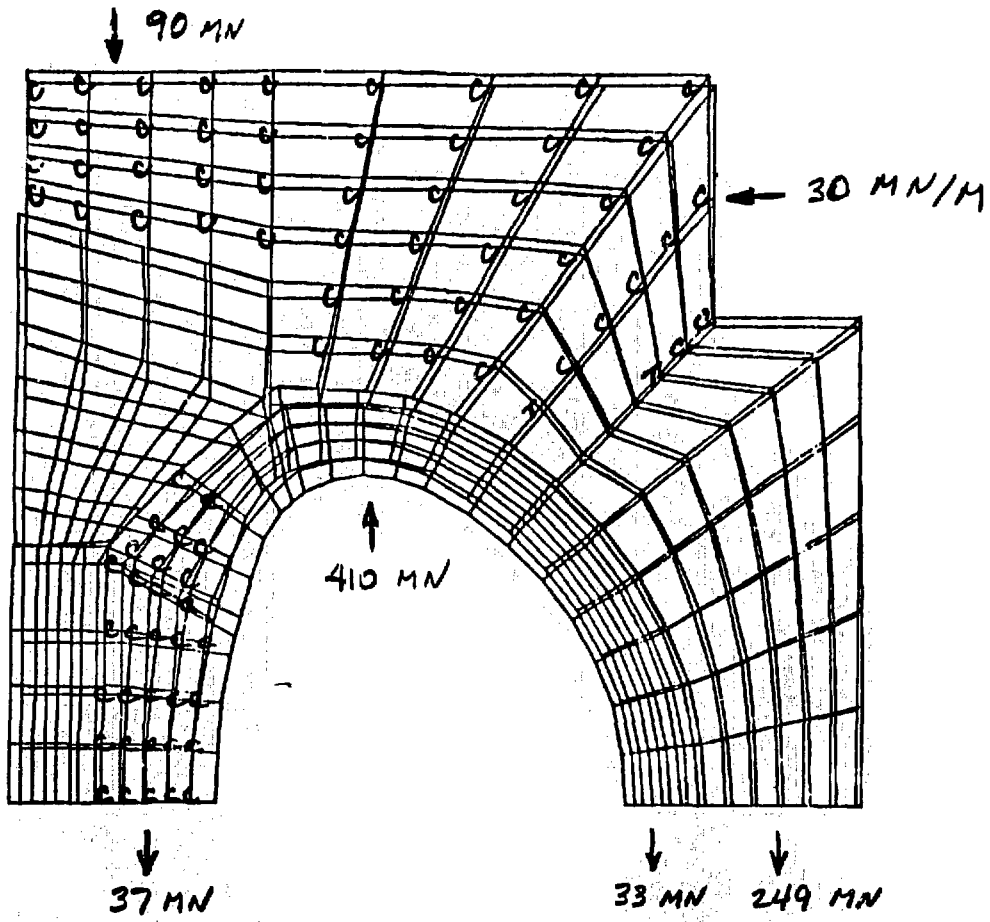

STRUCTURAL ASSESSMENT - IGNITOR A

- ***Use of preload, an external frame, and a bucked design result in a more compact permissible design than either of the other approaches***

- ***The fully trapped TF coil meets the structural criteria for in-plane loads and mid-range temperature rises, provided the assembly tolerances are properly controlled***

- ***the OH solenoid, against which the TF is bucked, represents an active bucking post, dependent on the level of excitation and temperature changes***

STRUCTURAL ASSESSMENT - IGNITOR A (CONTINUED)

- ***The balance between bucking and wedging must be controlled to be between:***
  - ***Partial wedging necessary to assure support of out-of-plane twist in the inner legs and***
  - ***Full wedging which would result in excessive face pressure***
- ***The TF inner legs must remain bonded, or be adequately wedged, to prevent buckling under preload***

IGNITOR 1.08 M PRESS CONFIGURATION

EXTERNAL PRESS CONCEPT

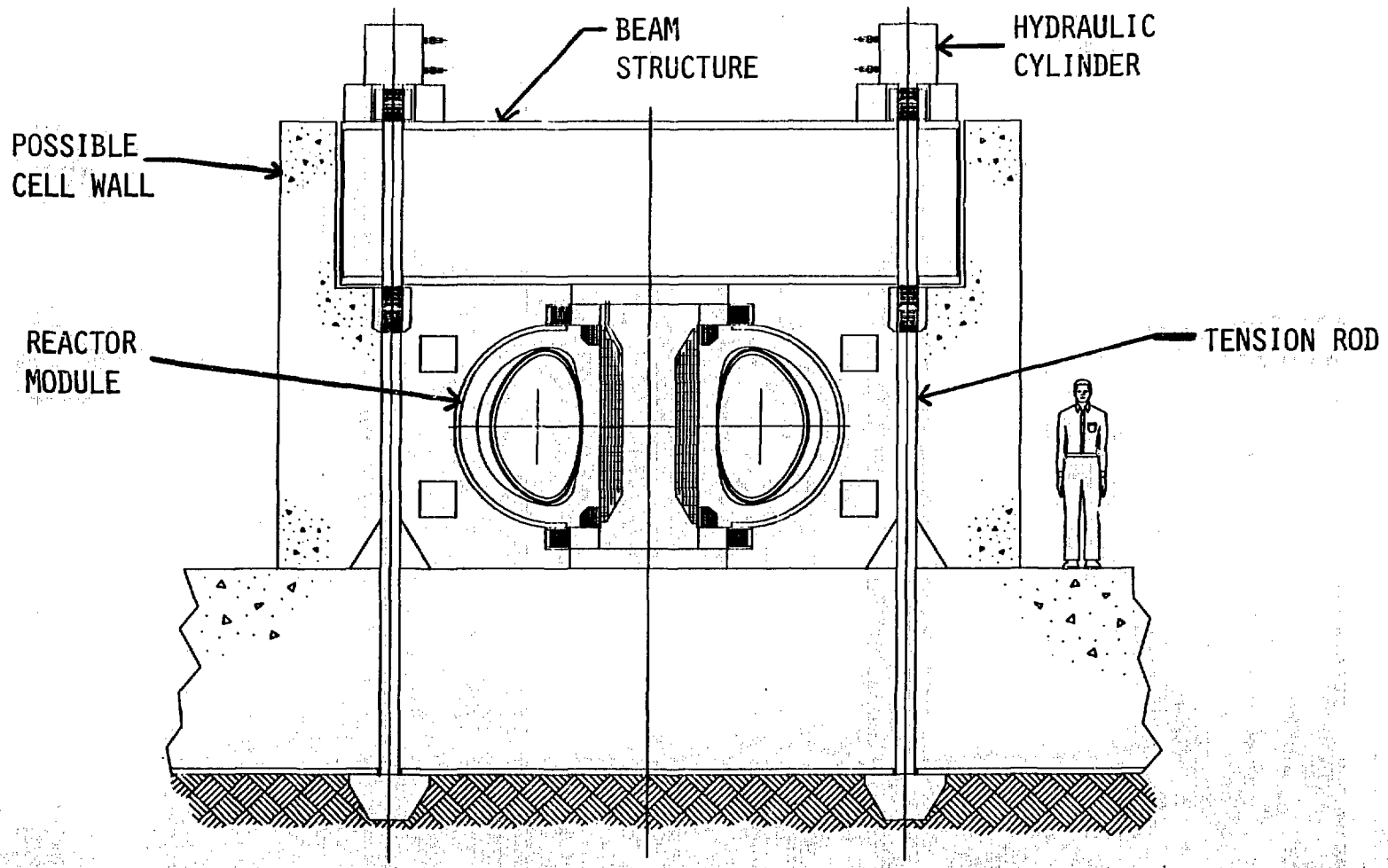

IGNITOR REACTOR MODULE

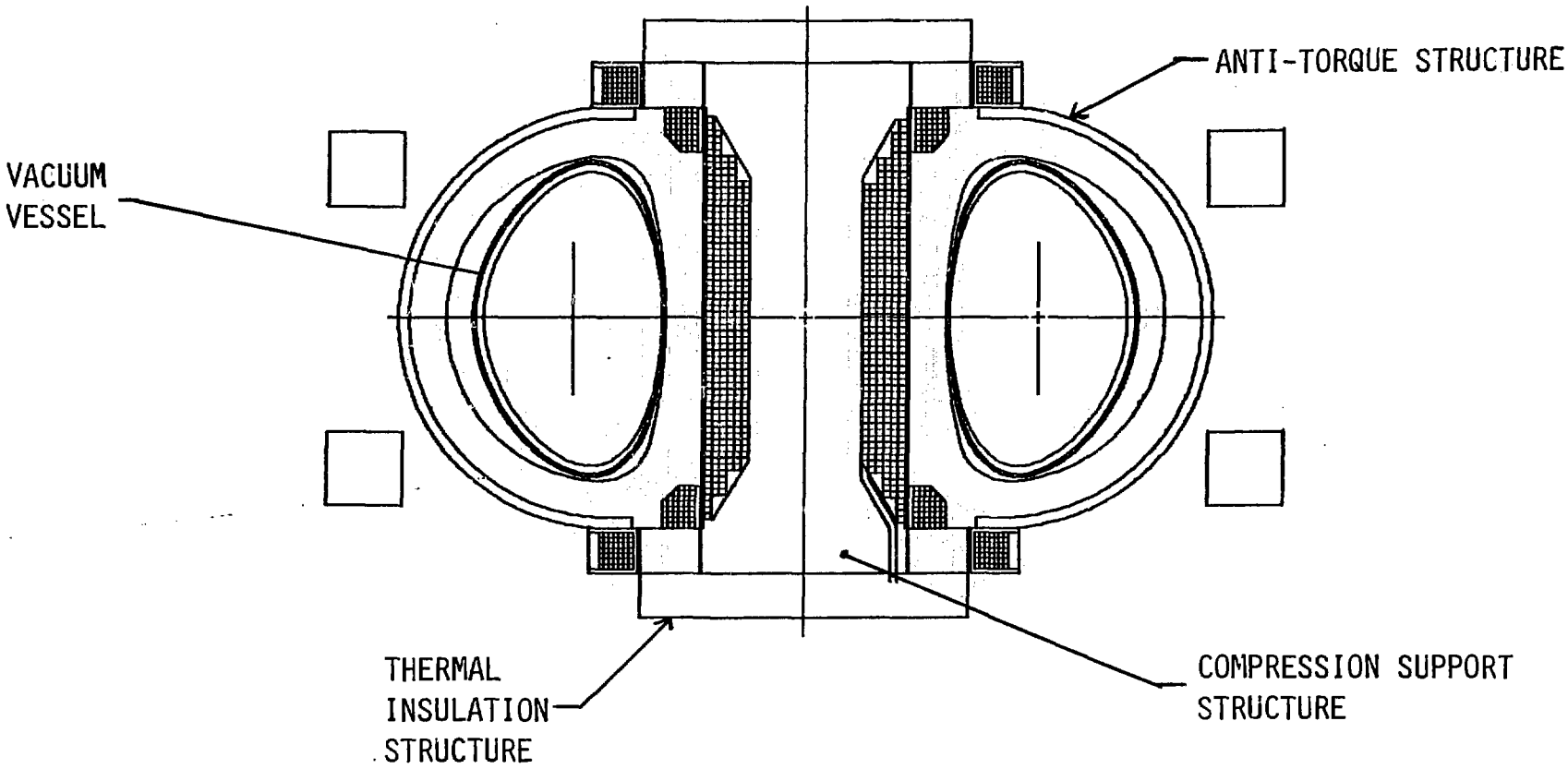

IGNITOR REACTOR MODULE - EXPLODED VIEW

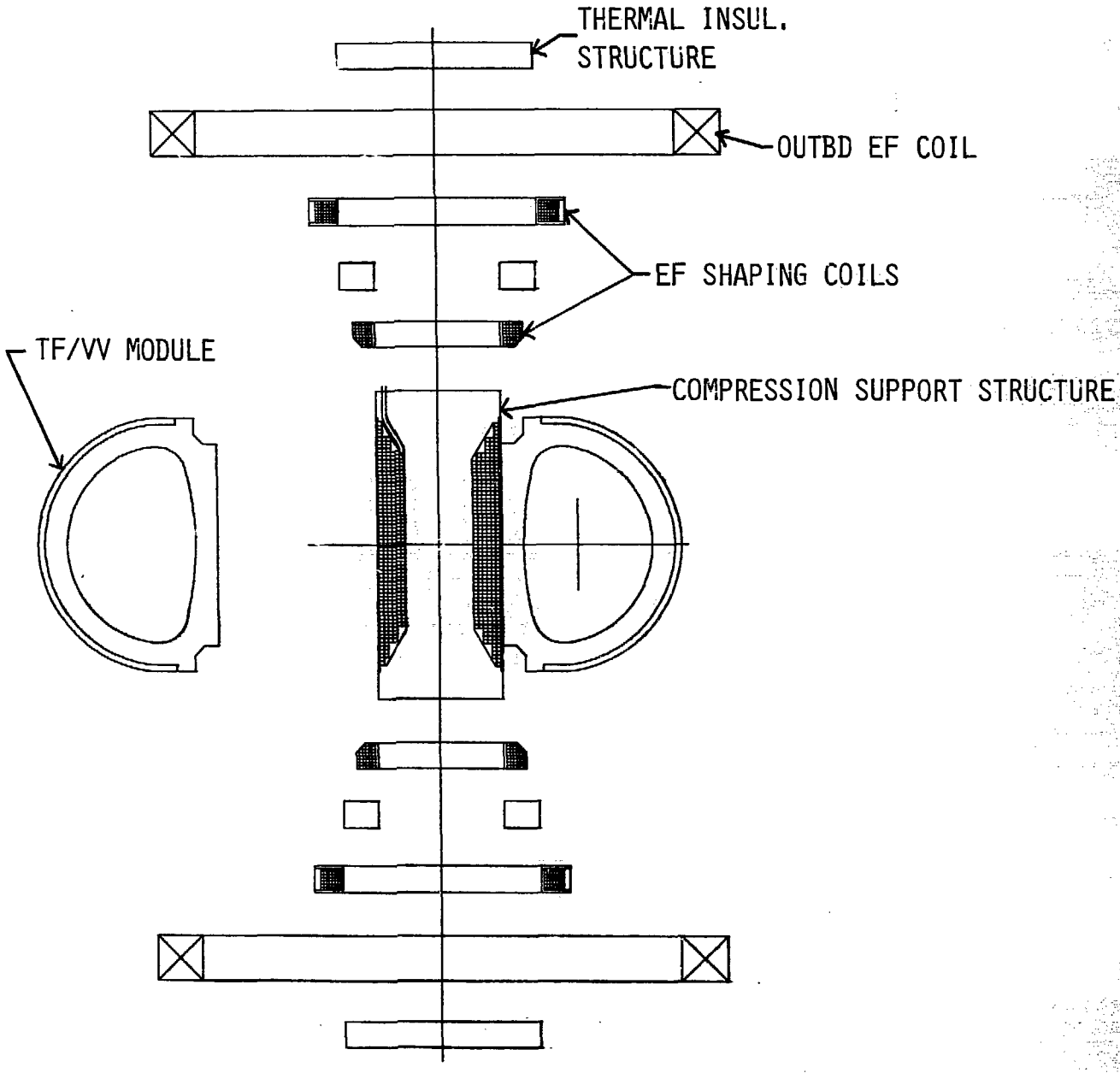

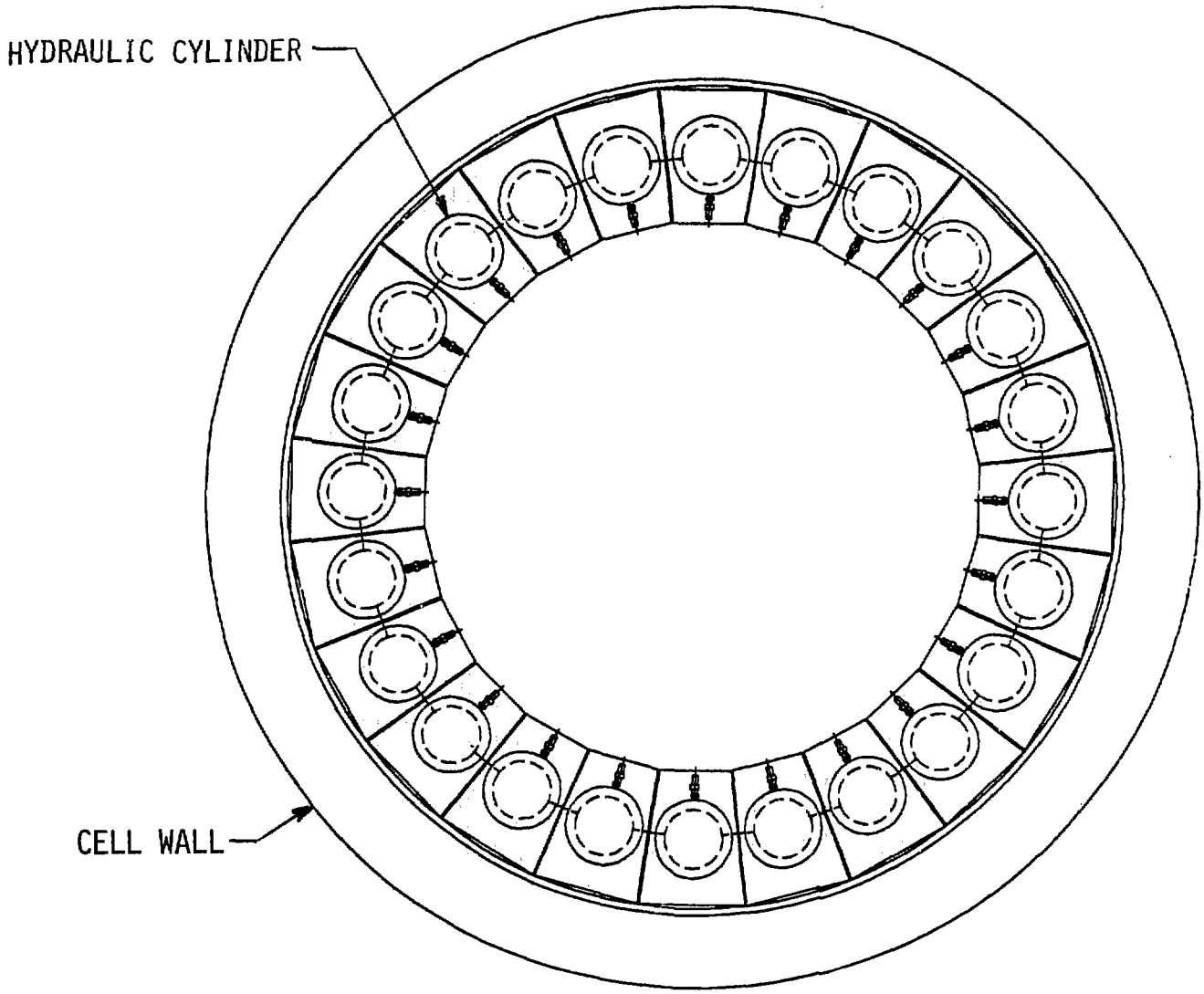

PLAN VIEW
(TOP OF MACHINE)

PLAN VIEW (MID-SECTION)

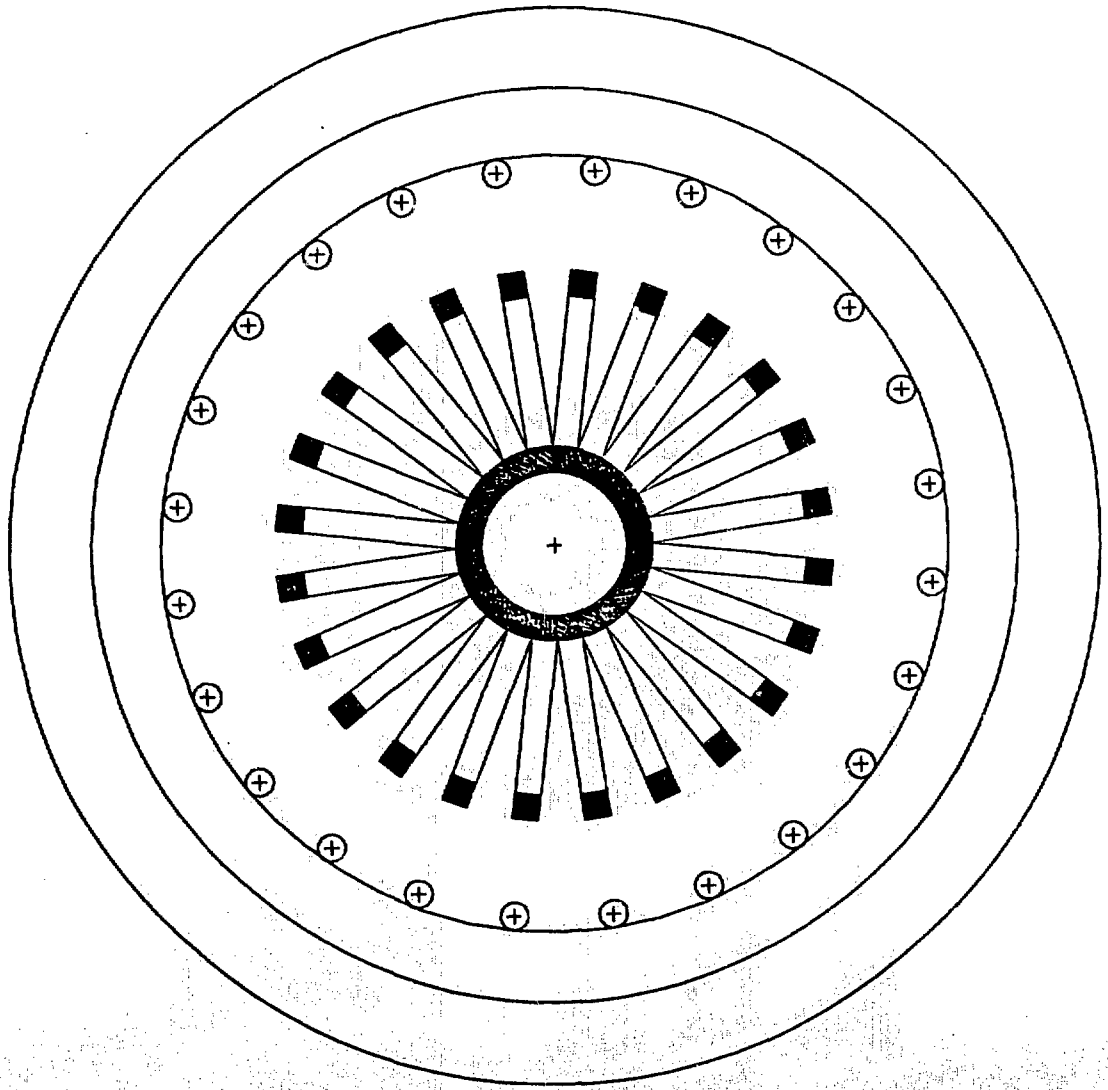

POTENTIAL REACTOR MODULE/FACILITY INTERFACE

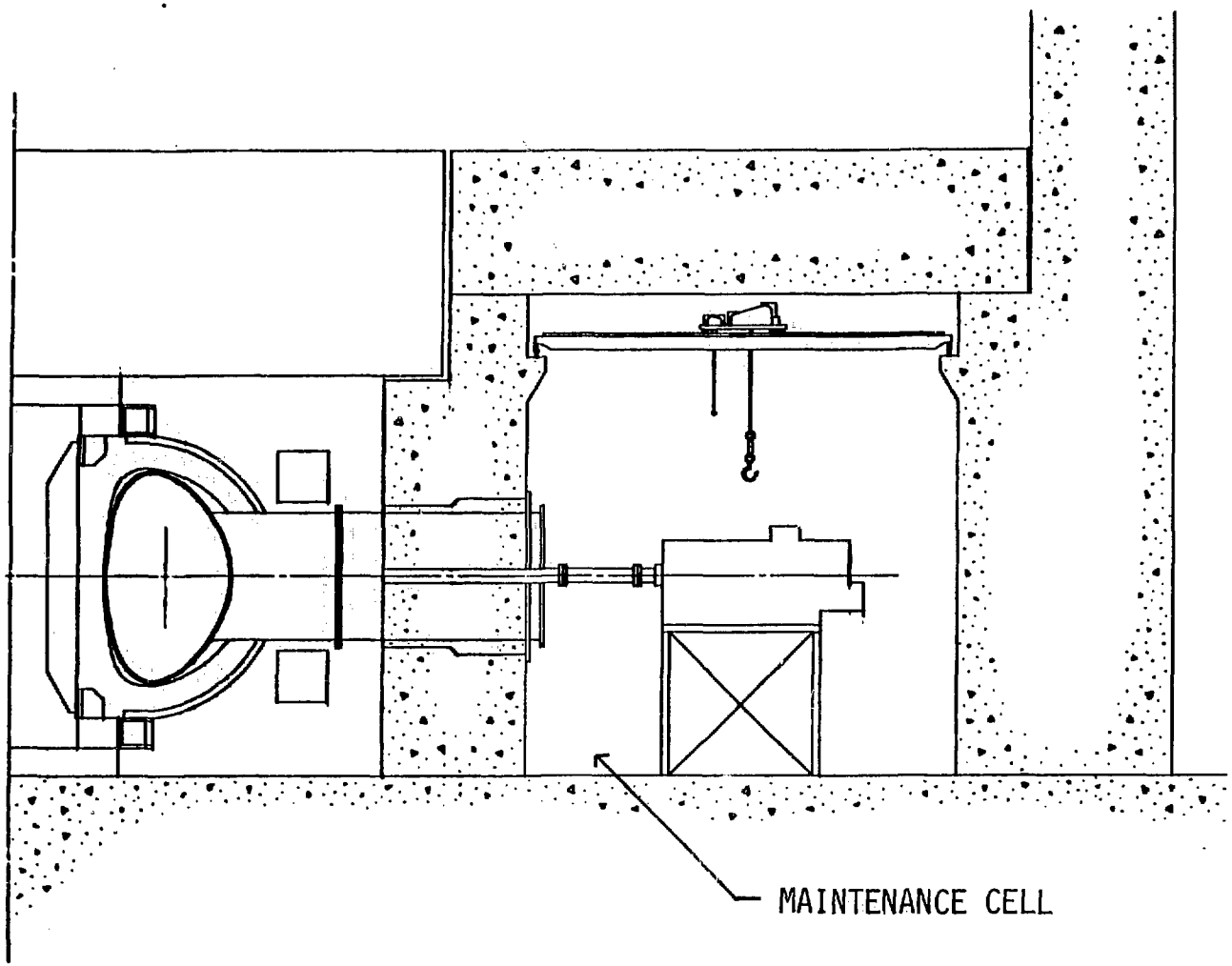

IGNITOR PRESS CONCEPT

STRUCTURAL ANALYSIS

PREISS CONCEPT

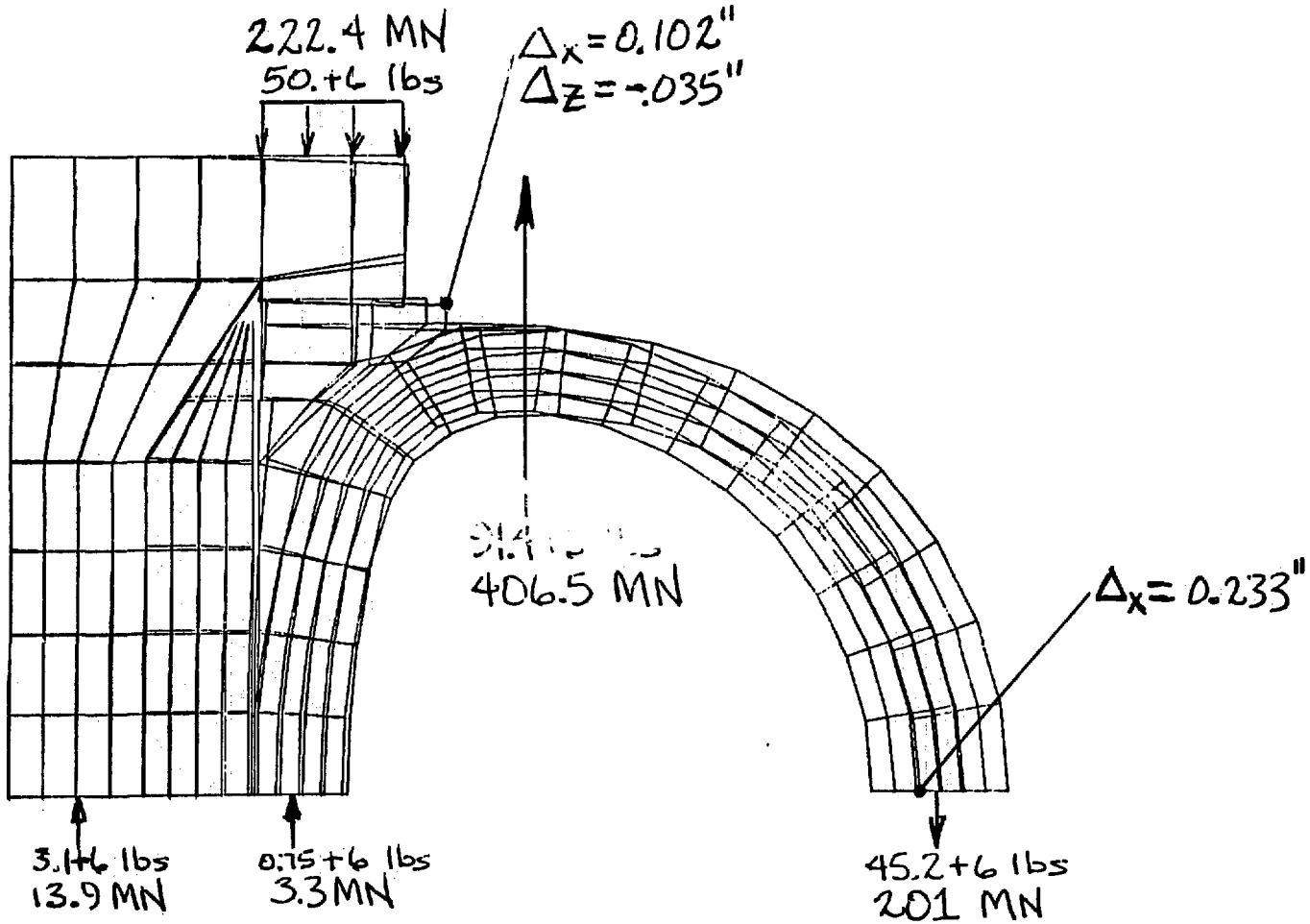

CTFE3
STATIC ANALYSIS
PRELOAD(50)(TAB) + TE FORCES
STATIC DEFOR SUBCASE 1 LOAD 700

PRESS CONCEPT

PRELOAD + TF EMF FORCES
(AVE STRESS)

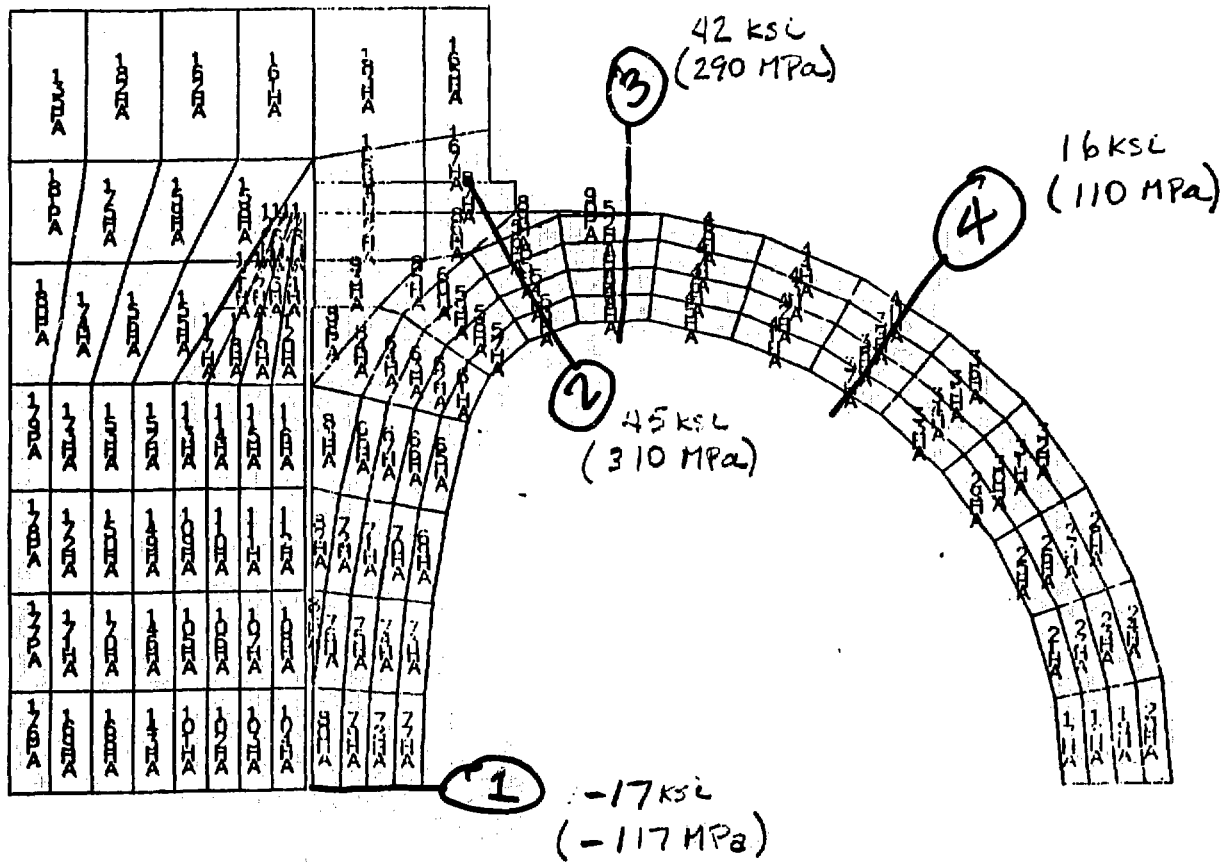

CTFF1
STATIC ANALYSIS
UNDEFORMED SHAPE