TO BE PRESENTED AT THE INTERNATIONAL CONFERENCE ON SUPERCOMPUTING
IN NUCLEAR APPLICATIONS (SNA' 90)
March 12-16, 1990, Mito City, Ibaraki, JAPAN CONF-900343--7

"TIGHTLY COUPLED" SIMULATION UTILIZING THE EBR-II LMR: A REAL-TIME SUPERCOMPUTING AND AI ENVIRONMENT[a]

Received by OSTI

Henry Makowitz* and John I. Sackett**

Idaho National Engineering Laboratory
P.O. Box 1625, Idaho Falls, ID 83415 USA

EGG-M--89448

DE91 001942

and

David G. Barber,* Gail A. Cordes,* J. M. Doster,† R. M. Edwards,††
K. C. Gross,*** Ronald W. King,** Wayne K. Lehto,** Richard W. Lindsay,**
Alan K. Powers,* Robert Scott, Jr.,* Jeffery D. S. Effon,**
Leonard W. Ward,* and J. White†††

Abstract: An integrated Supercomputing and AI environment utilizing a CRAY X-MP/216, a fiber-optic communications link, a distributed network of workstations and the Experimental Breeder Reactor II (EBR-II) Liquid Metal Reactor (LMR) and its associated instrumentation and control system is being developed at the Idaho National Engineering Laboratory (INEL). This paper summarizes various activities that make up this supercomputing and AI environment.

Introduction

Faster-than-real-time simulations along with the advanced graphics capability of state-of-the-art engineering workstations can provide the tools to develop simulation systems coupled with expert system knowledge bases. Such systems can enhance diagnostic and prognostic capability in the near term, and provide tools for the study of automatic control during startup and during power maneuvering in the future.[1] A project exploring this concept is underway at the INEL.

A "Tightly Coupled" transient analysis system[1] for the EBR-II is presently under development. The system consists of a faster-than-real-time high-fidelity reactor simulation, advanced graphics displays, expert system coupling, and real-time data coupling via the EBR-II data acquisition system to and from the plant and the control system. The first generation software has been developed and tested. Various subsystem couplings and the total system integration have been checked out. A "Tightly Coupled" EBR-II reactor startup was conducted in August of 1988 as a demonstration of the system. This system should enhance the diagnostic and prognostic capability of EBR-II in the near term and provide tools for the study of automatic control during startup and power maneuvering in the future, as well as serve as a testbed for new control system development for advanced reactors.

In principle a "Tightly Coupled" Transient Analysis System[1] consists of the following technology: (a) real-time simulation for diagnosis; (b) much faster than real-time simulation of prognostics; (c) feedback of reactor state data to the simulation code for system tracking; (d) expert system and other A/I technologies for diagnosis, prognostics, and control; and (e) advanced graphics. Figure 1 illustrates these ideas. The arrows in this figure indicate directions of information flow.

A prototype "Tightly Coupled" system is under development at the INEL. A faster-than-real-time high-fidelity simulation of the EBR-II reactor has been developed and is running on the INEL CRAY X-MP/216 supercomputer. The output is coupled to SUN graphics displays at the INEL Reactor Simulation Laboratory and at the EBR-II. This provides the needed tools to aid in the development of optimal plant control systems; diagnostics and prognostics systems; and real-time, hands-on, plant simulations. The transient analysis system consists of the Dynamic Simulator for Nuclear Power Plants (DSNP) simulation model of the EBR-II reactor coupled with an expert system, SUN graphics displays and the EBR-II Data-Acquisition System (DAS). This EBR-II advanced reactor control system's development testbed prototype is illustrated in Figures 1, 2, and 3.

The computer code being used for the faster-than-real-time computations is DSNP.[1] The DSNP code is a modular, multipurpose, systems simulation code for thermal-hydraulic modeling. The version used for this work is particularly suited for analysis of Liquid Metal Reactor (LMR) nuclear power plants. The output of the code along with EBR-II plant data is coupled to an expert system named HAL-1989[1] being developed at EG&G Idaho and the Nuclear Engineering Department of the University of Illinois, Champaign-Urbana Campus, to demonstrate an integrated diagnostics and prognostics system.

*EG&G Idaho, Inc., Idaho Falls, ID, USA (INEL).
**Argonne National Laboratory-West, Idaho Falls, ID, USA (INEL).
***Argonne National Laboratory-East, Argonne, IL, USA.
†North Carolina State University, Raleigh, NC, USA.
††Pennsylvania State University, PA, USA.
†††Oak Ridge National Laboratory, Oak Ridge, TN, USA.

a. Work supported in part under DOE Contract No. DE-AC07-76ID01570

MASTER

DISTRIBUTION OF THIS DOCUMENT IS UNLIMITED

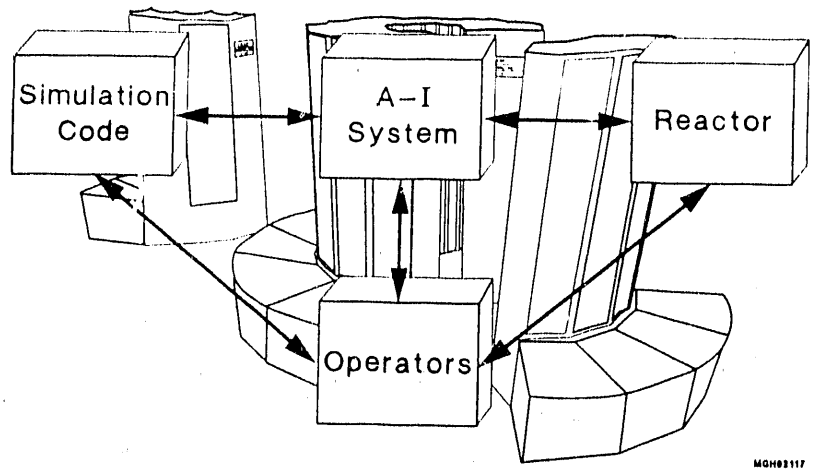

Figure 1. Concept of "Tightly Coupled" simulation.

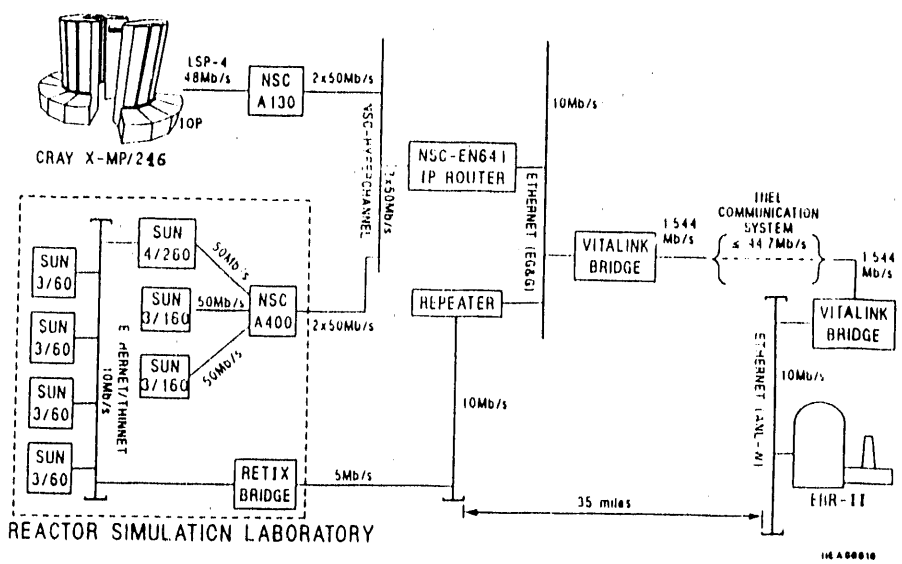

Figure 2. Hardware communications diagram.

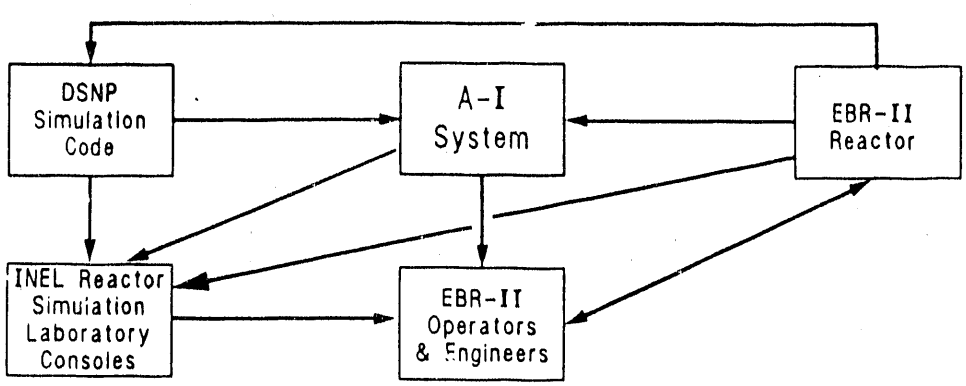

Figure 3. EBR-II Advanced Reactor Control Systems Development Test Bed Prototype.

The coupling of the EBR-II data network to the CRAY supercomputer is through an advanced fiber-optics communication link installed throughout the INEL (refer to Figure 2).

The system software communicates[1] via blackboards (BBs) using the TCP/IP network protocol with sockets. Blackboards are used to provide synchronization between the various tasks and as a database for real-time sensor data, simulation data, and archived sensor data. The system software interrelationship is illustrated in Figure 4.

This paper summarizes the various activities that make up this unique super-computing and AI environment. References 1, 2, and 3 should be consulted for a more detailed discussion of various subsystems. The direction of this work is to progress from a "Tightly Coupled" system for a single-phase incompressible fluid [i.e., DSNP (two-equation code) and EBR-II (liquid sodium)] to a "Tightly Coupled" system for a compressible fluid [i.e., CERBERUS[4] (six-equation code) with a four-equation drift flux code[5] for look ahead (CERBERUS for "real-time" and drift flux for 10X "real-time") that is utilized for a light water reactor (LWR) system such as the ATR at the INEL and/or a commercial PWR or BWR.

The supercomputing AI environment consists of a FRANZ Inc. ALLEGRO© COMMON LISP system on the SUN 4/260 and the CRAY X-MP/216 (refer to Figure 2). In addition to the "Tightly Coupled" system software environment[1] an integrated AI environment on the workstations at the EBR-II and ATR is under development. The rest of this paper will emphasize the environments at EBR-II and ATR and the AI and other developments that are an integral part of our "Tightly Coupled" system at these reactor facilities.

An Integrated Real-Time Diagnostic Concept Using Expert Systems, Qualitative Reasoning, and Quantitative Analysis

An approach for an integrated real-time diagnostic system (DISYS) is being developed for inclusion as an integral part of a power plant automatic control system. In order to participate in control decisions and automatic closed-loop operation, the diagnostic system must operate in real-time. Thus far, an expert system with real-time capabilities[2] has been developed and installed on a subsystem (Argon Cooling System for Fuel Handling) at the EBR-II. Real-time simulation testing of advanced power plant concepts at the Pennsylvania State University has been developed and will be used to support the expert system development and installation at EBR-II. Recently, the U.S. National Science Foundation (NSF) and the U.S. Department of Energy (DOE) have funded a Penn State research program to further enhance application of real-time diagnostic systems by pursuing implementation in a distributed power plant computer system including microprocessor-based controllers.

Failed Fuel Surveillance and Diagnosis System at EBR-II

The failed fuel surveillance and diagnosis system monitors, processes, and interprets information from nine key plant sensors. It displays to the reactor operator diagnostic information needed to make proper decisions regarding technical specification conformance during reactor operation with failed fuel.

Pump Surveillance System at EBR-II

The pump surveillance system uses an expert system for on-line surveillance of nuclear reactor coolant pumps. The expert system employs the Sequential Probability Ratio Test (SPRT) to process the stochastic components of corresponding physical parameters from sensors on each of two pumps (e.g., speed signals, vibration levels, powers, discharge pressures) for a very sensitive and early annunciation of a disturbance in either pump. If an alarm is triggered indicating a disturbance in a monitored signal on either pump, then SPRTs are applied between pairs of sensors in each pump. The expert system can then distinguish between actual pump degradation and the degradation or failure of an individual

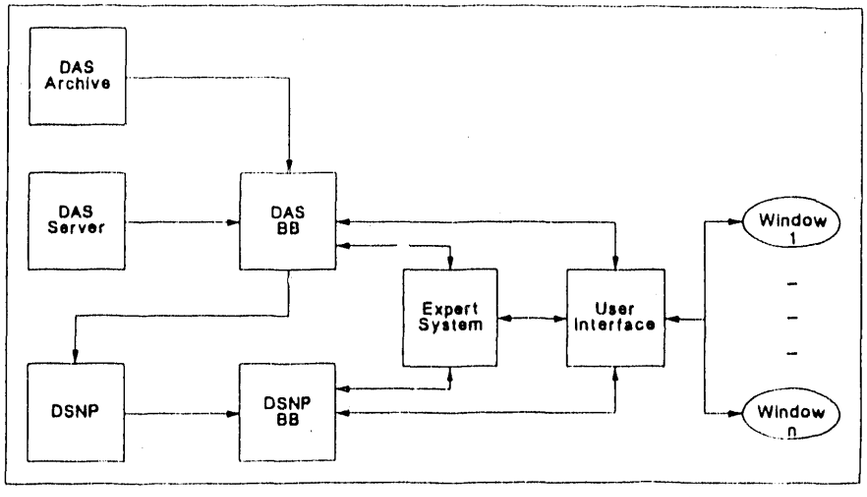

Figure 4. Software System block diagram.

sensor. In the latter case it will identify the sensor that has failed.

System State Analyzer Development and Application

The System State Analyzer (SSA) is a software-based pattern-recognition system that uses previously established relationships of signals from the plant data acquisition system to compare with relationships of current signals on-line. This comparison is used to detect inconsistencies in the signal patterns representing a particular process. The SSA software learns patterns from a selected group of sensor signals that have been determined to be representative of the process to be monitored. The SSA algorithms use the learned patterns or relationships to monitor new data and detect variations from the expected relationships. It also provides on-line validated estimates of each signal value based on pattern relationships with the other signal values. Comparisons can be made on an on-line basis or historical for trend analysis of component or instrument degradation. SSA software is currently running on the EBR-II data-acquisition system computer (DAS), monitoring 115 plant signals measuring reactor, primary, secondary, and steam system parameters. This group of signals represents the heat generation and transfer process through the plant. Other SSA signal maps are also in use that monitor performance of specific systems and components. The SSA has been tested and is used routinely during steady-state plant conditions and during plant transient testing periods for transient profile monitoring.

Real-Time System State Analyzer Use at EBR-II

The System State Analyzer (SSA) has been implemented in a surveillance mode at EBR-II. In addition, the SSA appears to be adaptable to use as an on-line monitor. This system is referred to as the Real-Time SSA (RTSSA). The RTSSA includes the capability to do pattern matching at a once-per-second rate and provide a "moving" display of the results. Loss of signals, process deviation from the desired state, and the ability to do hierarchically structured diagnostics are part of the RTSSA. The RTSSA is integrated into the GRAFUN graphics program.

A Model-Based Display System for the Experimental Breeder Reactor-II (GRAFUN)

A full-color, model-based display system has been developed for use at the Experimental Breeder Reactor II by plant operators, engineers, and experimenters. The displays generate a real-time thermodynamic model of the plant processes on computer screens to provide a direct indication of the plant performance. Operators and others who view the displays are no longer required to mentally "construct" a model of the process before acting. The model-based display accurately depicts the plant state. Preliminary comments from users, including operators, indicate an overwhelming acceptance of the display approach. The displays incorporate alarm functions as well as levels of detail "paging" capability. The system is developed on a computer network which allows the easy addition of displays as well as extra computers. Constructing a complete console can be rapid and inexpensive.

Multivariate and Nonlinear Control Using Neural Networks at ATR

Neural network technology is rapidly gaining recognition as a viable and amazingly effective tool for achieving computer learning. At INEL, research has focused on the application of neural networks to control systems.

During Fiscal year 1989, the EG&G Experimental Research and Development Program supported development of a back-propagation neural network software package and its successful application to liquid-level control of a process tank. The neural network controlled water levels in both a simulated tank and a demonstration tank in an accurate, smooth, repeatable manner.

Present work is applying the technology to reactor control systems. Research focuses on the heat load controller for an experimental loop at INEL's Advanced Test Reactor (ATR). A classical, linear, single variable control system presently controls the flow rate and temperatures of the cooling water in the experimental loop. The neural network will provide a multivariate, nonlinear control for the flow rate and temperatures, thus modeling dynamics which can add unexpected instability to the classical system.

The CERBERUS Code

As stated previously, we would like to progress from a "Tightly Coupled" system for a single-phase incompressible fluid (i.e., an LMR under normal or slow transient conditions) to a system for a compressible two-phase fluid (i.e. an LWR under normal or slow transient conditions). This requires real time and much faster than real time high fidelity LWR simulation capability. We hope to obtain some of this capability via the use of parallel processing with the CERBERUS[4] code.

CERBERUS,[4] a six-equation parallel thermal-hydraulic system simulation code, is being developed at the Idaho National Engineering Laboratory (INEL). The starting point of CERBERUS is the RELAP5/MOD3 system simulation code which has been developed for single central processing unit (cpu), shared memory, Single Instruction Multiple Data (SIMD), computer architectures. The near-term development targets for CERBERUS are shared memory, Multiple Instruction Multiple Data (MIMD), four- to sixteen-cpu machines such as the CRAY X-MP/48 and Y-MP/832, which are respectively, four and eight cpu computers. The present version of this code, CERBERUS Ver.00, performs parallel computations only for the heat transfer model. It is projected that CERBERUS Ver.01 will have a parallel heat transfer and hydraulic module, excluding the matrix solver, and CERBERUS Ver.02 will contain Ver.01 plus the solver.

Three implementations, of the CERBERUS Ver.00 code, with constructs of varying overhead, have been developed using a "META" language. These implementations are presently under study

on shared memory "CRAY"-like computer architectures. Results for the hybrid code version,[4] which utilizes all three construct sets simultaneously (i.e., CRAY AUTO, MICRO, and MULTI TASKING) on two- and eight-cpu CRAY machines indicate the importance of load balancing for overhead reduction, and indicate that greater speedup factors may be achievable than previously believed with a RELAP-based parallel code. Extrapolations based on Y-MP/832 overhead measurements indicate that a speedup factor of greater than ten may be obtainable with the CERBERUS Ver. 02 code on a sixteen-cpu machine.

In the future we hope to extend our "Tightly Coupled" system to the ATR at INEL (a low-pressure PWR), utilizing the CERBERUS code in a similar manner that the DSNP code is used with the EBR-II.

Autostart

Oak Ridge National Laboratory (ORNL) and Argonne National Laboratory (ANL) are undertaking a joint project to develop control philosophies, strategies, and algorithms for computer control of the startup mode of the Experimental Breeder Reactor II (EBR-II). The major objective of this project is to show that advanced liquid-metal reactor (LMR) plants can be operated from low power to full power using computer control. Development of an automated control system with this objective in view will help resolve specific issues and provide proof through demonstration that automatic control for plant startup is feasible.

Limitations in the ability of important systems measurements for Autostart to be remotely acquired and transmitted to the control room and limitations in capability of remote actuation of plant equipment prevents extensive automation to be economically introduced to EBR-II. With these limitations in mind several automation projects are being pursued. The first development is an automatic system for reactor subsystem startup. To accomplish startup, the plant procedures are converted to state-transition models in the discrete-event domain. A computing engine is developed to run the state-transition algorithms. By way of flexibility, ease of understanding, and the inherent knowledge of plant state, this approach is superior to traditional ladder-logic paradigms used almost exclusively for discrete systems control. Work is now beginning on this effort with results expected by the end of 1990.

The second development is an advanced (continuous) control algorithm for use on the existing microprocessor controllers at the plant. The advanced algorithm will be tailored for plant startup. As necessary, existing controllers may have to be upgraded with more powerful ones. In the development of the advanced algorithm, several control techniques will be explored such as linear-quadratic-Gaussian (LQG) and other model-based multivariate architectures. One potentially useful technique, called reconstructive control, is based on a modified nonlinear inverse dynamics approach with corrective feed-back. This technique has not been previously applied to power plant process control. Work is currently underway with results expected by the end of 1990. Both techniques will be integrated with the "Tightly Coupled" system methodology for testing purposes.

Procedure Prompting

A procedure prompting system is currently being explored as part of the EBR-II/ORNL Autostart Program. Existing plant startup procedures are being conformed to a format suitable for an expert system and a database manager to handle. The final system will track the condition of the plant while providing pertinent text and graphical information to the operator. The procedure prompting system will have access to the plant data acquisition system so that plant parameters will be automatically inserted into the procedures and all normal calculations will be performed. Applicable technical specifications will also be monitored for violation and approach to violation. The system will consist of a software package running on a work-station with a high-resolution display. A demonstration is planned by the end of 1990. This system will be integrated with other "Tightly Coupled" system components.

Conclusion

"Tightly Coupled" transient analysis systems may provide both passive control advice and active control functions in future nuclear reactor control systems. In the near term such systems can be utilized as intelligent operator aids and as tools for the design of future nuclear reactor control systems. We are presently in the early phase of such a "Tightly Coupled" system. We view this phase of our system development as necessary and hope that future research with "Tightly Coupled" systems will pave the way for safer nuclear reactor system control and operation. We also hope that the Supercomputing and AI environment that we are developing will become the focus of international cooperation in this research area.

REFERENCES

1. H. Makowitz et al., "Tightly Coupled Transient Analysis of EBR-II, An INEL Engineering Simulation Center Project," Proceedings of the ANS Topical Meeting on Advances in Nuclear Engineering Computation and Radiation Shielding, Santa Fe, New Mexico, April 9-13, 1989, Vol. 1, pp. 26:1-26:12.

2. R. M. Edwards et al., "An Integrated Real-Time Diagnostic Concept Using Expert Systems. Qualitative Reasoning and Quantitative Analysis," Proceedings of the U.S.-Korea Seminar on Applications of Expert Systems to Power Systems and Industries, Seoul, South Korea, August 14-18, 1989, pp. 281-312.

3. W. K. Lehto and K. C. Gross, "Expert System Applications in Support of System Diagnostics and Prognostics at EBR-II," Proceedings of the U.S.-Korea Seminar on

Applications of Expert Systems to Power Systems and Industries, Seoul, South Korea, August 14-18, 1989, pp. 231-256.

4. H. Makowitz, "The CERBERUS Code: Experiments with Parallel Processing Using RELAP5/MOD3," Proceedings of the ANS Winter Meeting, San Francisco, California, November 26-30, 1989.

5. L. W. Ward, "A Simplified Methodology for the Prediction of the Small Break Loss-of-Coolant Accident," PhD Thesis, Columbia University, 1988.

DISCLAIMER

This report was prepared as an account of work sponsored by an agency of the United States Government. Neither the United States Government nor any agency thereof, nor any of their employees, makes any warranty, express or implied, or assumes any legal liability or responsibility for the accuracy, completeness, or usefulness of any information, apparatus, product, or process disclosed, or represents that its use would not infringe privately owned rights. Reference herein to any specific commercial product, process, or service by trade name, trademark, manufacturer, or otherwise does not necessarily constitute or imply its endorsement, recommendation, or favoring by the United States Government or any agency thereof. The views and opinions of authors expressed herein do not necessarily state or reflect those of the United States Government or any agency thereof.

END

DATE FILMED

11 / 21 / 90