40
1/7/81
M.E.

(2)

Dr. 2940

DOE/ET/27203-1
(DE81023938)

MASTER

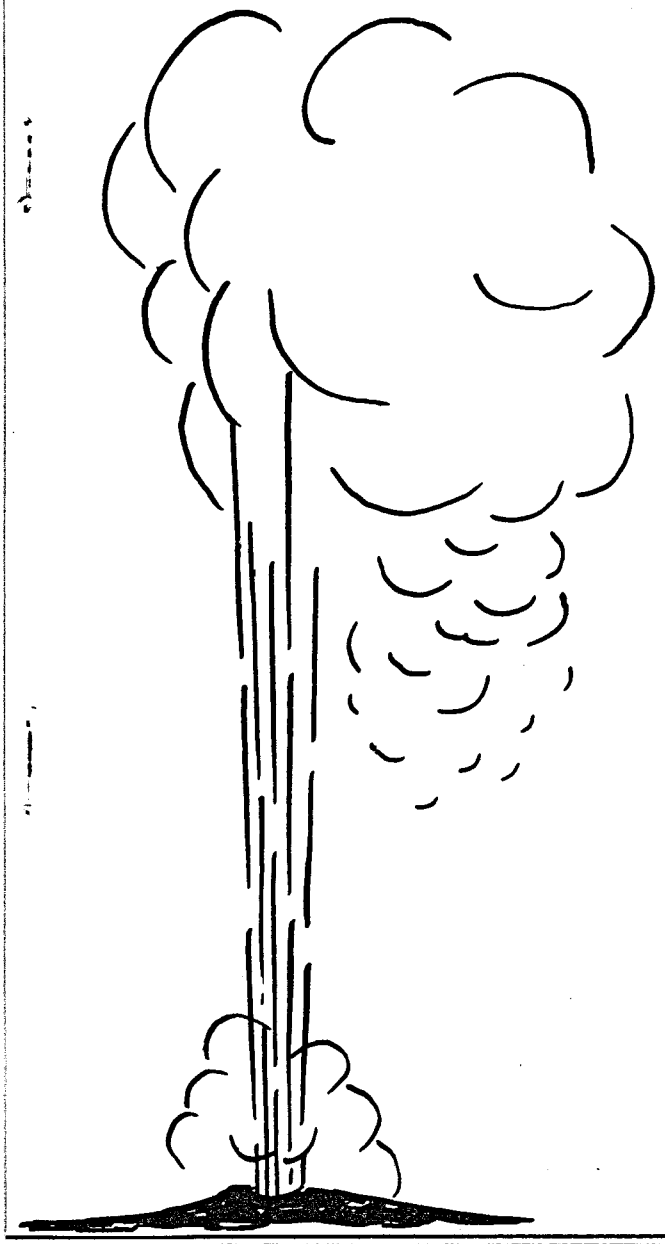

# GEOTHERMAL HYDROGEN SULFIDE REMOVAL

DIST ~~440~~ 369
NTIS 25

By
P. Urban

April 1981

Work Performed Under Contract No. AC03-79ET27203

UOP Inc.
Des Plaines, Illinois

## DISCLAIMER

"This book was prepared as an account of work sponsored by an agency of the United States Government. Neither the United States Government nor any agency thereof, nor any of their employees, makes any warranty, express or implied, or assumes any legal liability or responsibility for the accuracy, completeness, or usefulness of any information, apparatus, product, or process disclosed, or represents that its use would not infringe privately owned rights. Reference herein to any specific commercial product, process, or service by trade name, trademark, manufacturer, or otherwise, does not necessarily constitute or imply its endorsement, recommendation, or favoring by the United States Government or any agency thereof. The views and opinions of authors expressed herein do not necessarily state or reflect those of the United States Government or any agency thereof."

This report has been reproduced directly from the best available copy.

Available from the National Technical Information Service, U. S. Department of Commerce, Springfield, Virginia 22161.

Price: Printed Copy A04
Microfiche A01

DOE/ET/27203-1
(DE81023938)
Distribution Category UC-66e

# GEOTHERMAL HYDROGEN SULFIDE REMOVAL

P. Urban
April, 1981

Work Performed for
The Department of Energy
Under Contract DE-AC03-79ET-27203

UOP Inc.
Des Plaines, IL 60016

TABLE OF CONTENTS


| | | |
|---|---|---|
| | Table of Contents | ii |
| | List of Tables | iv |
| | List of Figures | v |
| | Acknowledgement | vi |
| I. | Abstract | 1 |
| II. | Executive Summary | 2 |
| III. | Introduction | 4 |
| | A. Geothermal Sulfide Process Requirements | 4 |
| | B. Process Descriptions | 7 |
| | C. Chemistry | 8 |
| IV. | Apparatus and Analytical Scheme | 11 |
| | A. Experimental Apparatus | 11 |
| | B. Analysis | 14 |
| | C. Plant Operations | 16 |
| V. | Results | 17 |
| | A. Rate of Reaction | 18 |
| | B. Uncatalyzed Reaction | 20 |
| | C. Oxygen Content of Product Steam | 22 |
| | D. Elemental Sulfur Production | 23 |
| | E. Catalyst Stability | 25 |
| | F. Inspection of Used Catalyst | 27 |
| | G. Effect of $NH_3/S^=$ Molar Ratio and pH | 28 |
| | H. Effect of $O/S^=$ Atom Ratio | 31 |

I. Effect of Pressure 33

J. Effect of Temperature 35

K. Effect of Salt 37

L. Sodium Bicarbonate as an Alkalizing Agent 39

M. Deposition of Sulfur on the Catalyst 40

VI. Discussion 41

A. Evaluation of Results Based on Process Requirements 41

B. Operating Cost Estimation 44

C. Field Test Pilot Plant Design 46

D. Commercialization Plan 47

E. Proposed Modes of Operation 48

1. Saturated Steam Treating Process 48

2. Treatment of Highly Saline Brines 48

3. Treatment of Low Sulfide, Low Mineral Content Streams 49

VII. Conclusions 50

## LIST OF TABLES


| Table Number | Title | Page |
|---|---|---|
| 1 | Rate of Sulfide Conversion | 19 |
| 2 | Catalyzed and Uncatalyzed Sulfide Conversion | 21 |
| 3 | Elemental Sulfur Production Run 13 | 24 |
| 4 | Stability of Catalyst Activity | 26 |
| 5 | Effect of pH and $NH_3/S^=$ Molar Ratios on Sulfide Conversion and Product Distribution | 30 |
| 6 | Effect of the $O/S^=$ Ratio on Product Distribution and Sulfide Conversion | 32 |
| 7 | Effect of Pressure | 34 |
| 8 | Effect of Temperature | 36 |
| 9 | Effect of Salts | 38 |
| 10 | Effect of Alkalizing Agent on Product Distribution | 39 |
| 11 | Effect of Sulfur Deposition on Catalyst Activity | 40 |
| 12 | Recovery of Catalyst Activity After Sulfur Deposition | 40 |

## LIST OF FIGURES


| Figure Number | Title | Page |
|---|---|---|
| 1 | Process Design for Treating Mixed Phase Geothermal Streams of Low Salt Content | 51 |
| 2 | Process Design for Treatment of High Salinity or Scaling Geothermal Streams | 52 |
| 3 | Geothermal Pilot Plant, Plant 672. Schematic Diagram | 53 |
| 4 | Effect of Ammonia to $H_2S$ Ratio on Product Distribution | 54 |
| 5 | Effect of Salts on $H_2S$ Conversion | 55 |
| 6 | Effect of Alkalizing Agent on Product Distribution | 56 |
| 7 | Process Flow Diagram. Hydrogen Sulfide Removal Process. Field Test Pilot Plant. Sonoma/Lake Counties | 57 |
| 8 | Process Design for Treating Vapor Phase Geothermal Streams | 58 |

## ACKNOWLEDGEMENT

We would like to acknowledge the important contributions of Anthony J. Adduci and Gerald Katz, DOE Geothermal Energy Division, San Francisco Operations, for their active project management, scientific insight, and contributory technical review.

# I. ABSTRACT

UOP Sulfox® technology successfully removed 500 ppm hydrogen sulfide from simulated mixed phase geothermal waters. The Sulfox process involves air oxidation of hydrogen sulfide using a fixed catalyst bed. The catalyst activity remained stable throughout the life of the program. The product stream composition was selected by controlling pH; low pH favored elemental sulfur, while high pH favored water soluble sulfate and thiosulfate. Operation with liquid water present assured full catalytic activity. Dissolved salts reduced catalyst activity somewhat.

Application of Sulfox technology to geothermal waters resulted in a straightforward process. There were no requirements for auxiliary processes such as a chemical plant. Application of the process to various types of geothermal waters is discussed and plans for a field test pilot plant and a schedule for commercialization are outlined.

## II. EXECUTIVE SUMMARY

The UOP Sulfox® process is a means for catalytically oxidizing hydrogen sulfide to elemental sulfur utilizing air as the oxidant. The highly stable catalyst has been operated in water saturated steam at 430°F and at temperatures in excess of 570°F on sulfide-containing gas streams. The application of this process to geothermal streams provides a system which is flexible so as to produce either sulfur or water-soluble by-products that can be easily disposed of in the waste brine solutions. Sulfide conversion is complete.

In September, 1979, DOE contracted with UOP to study the application of Sulfox process technology for the removal of hydrogen sulfide from a mixed phase geothermal fluid upstream of a turbine generating electricity. A program was established to investigate process variables. The program consisted of the treatment of a vapor-liquid water mixture containing hydrogen sulfide, carbon dioxide, and ammonia, at concentrations similar to those found at The Geysers, California. A research-scale automated plant was constructed in which the important parameters could be studied for extended periods of time.

The research plant utilized catalysts proprietory to UOP to convert the sulfide to desirable products. Results from these studies have shown that the system is capable of oxidizing hydrogen sulfide in a mixed phase. Sulfide conversion was complete at concentrations typical of geothermal streams (0-600 ppm $H_2S$) even at the plant's maximum feed liquid hourly space velocity (LHSV) of 40. [LHSV = volume of mixed phase feed, expressed as the liquid equivalent, passed over a volume of catalyst per hour.] The products of oxidation were controlled primarily by oxygen stoichiometry and pH; alkaline conditions

produced mainly (88%) water-soluble compounds (thiosulfate and sulfate), and acid conditions produced mainly elemental sulfur (75%). High salt concentrations reduced the rate of sulfide conversion somewhat.

The investigation of variables was conducted within a temperature range of 250 to 350°F and pressures of 90 to 180 psig, the limits of plant capability. Studies indicated the need for some liquid water to be present on the catalyst, as a substantial decrease in reaction rate was noted under an all vapor condition. The presence of sodium sulfate in the feed reduced the conversion, because dissolved salts reduce the solubility of oxygen in the geothermal liquid.

The catalyst was stable for the 1300 hour life of a program under a variety of conditions. At the end of this time, the $O/S^{=}$ ratio needed for complete sulfide conversion had not increased.

Contaminants may cause loss of catalyst activity over long periods of time. Because of the complex nature of the potential contaminants, on-site testing of the system is recommended. A field test pilot plant program is outlined along with a schedule for commercialization of this successful hydrogen sulfide removal process.

## III. INTRODUCTION

### A. Geothermal Sulfide Removal Process Requirements

Hydrogen sulfide occurs in many geothermal streams and is a toxic gas having a disagreeable odor capable of being detected at levels as low as 10 parts per billion. Many states have passed laws limiting the amount of hydrogen sulfide that can be released to the atmosphere. Also, its presence in the environment of electrical switching gear must be avoided because of sulfiding of copper and silver contacts. Hydrogen sulfide in conjunction with oxygen corrodes ferrous metals. For these reasons, the amount of hydrogen sulfide that is allowed to be released to the atmosphere from a geothermal source is usually limited. Thus, a system for hydrogen sulfide removal has become crucial to the production of energy from geothermal sources.

The processes for removing hydrogen sulfide from geothermal streams can be classified into two major categories: (1) upstream processes that convert hydrogen sulfide before the geothermal steam enters the power-generating turbine, and (2) downstream processes that convert the hydrogen sulfide escaping from the various atmospheric vents downstream of electric power generation.

An example of an upstream process is the EIC process in which sulfide containing steam from the wellhead is contacted with a solution of copper sulfate forming copper sulfide and dilute sulfuric acid. The increase in acidity is neutralized with ammonia and the copper sulfide is oxidized back to the sulfate. The system is maintained in balance by the removal of ammonium sulfate from the system. A downstream process for removal of hydrogen sulfide is the Stretford process which utilizes a solution of the sodium salts of thiosulfate, carbonate and bicarbonate with catalytic amounts of vanadate and anthraquinone disulfonate for absorption of the hydrogen sulfide and subsequent air oxidation

of the sulfide to elemental sulfur. The process treats non-condensable gas, but due to the alkalinity of the condensate, 10 to 40% of the hydrogen sulfide can escape by being vented through the cooling towers. This requires a secondary treatment of the condensate, such as the addition of hydrogen peroxide and catalyst. Downstream treatments require shell and tube-type condensers to prevent solution of the hydrogen sulfide in the large volumes of cooling tower water. A detailed description of these and other hydrogen sulfide removal processes is given in "State-of-the-Art Hydrogen Sulfide Control for Geothermal Energy Systems", DOE/EV-0068 UC-11, 66e.

In the above-mentioned report, upstream treating is given preference, because all the downstream venting problems due to hydrogen sulfide are eliminated. Although several processes for upstream treatment have been developed, none is presently capable of effectively handling a mixed phase of liquid water and steam. This is mainly due to loss of reagents in the liquid phase or unfavorable equilibrium for solution of hydrogen sulfide into an alkaline absorbent.

An improved process capable of oxidizing hydrogen sulfide in a mixed phase would consist of a water-insoluble catalyst that would oxidize the hydrogen sulfide to non-volatile products. The UOP Sulfox process satisfies these demands. It employs a solid granular catalyst, inert to aqueous solutions across the entire pH range, stable in high temperature water and capable of producing a variety of products from the oxidation of hydrogen sulfide. It, therefore, is a suitable candidate for the upstream treating of geothermal streams.

In September of 1979, DOE awarded a contract to UOP for the investigation of the chemistry of Sulfox type catalyst as applied to the treatment of geothermal streams (Contract DE-AC03-79 ET-27203). The catalyst had been developed for the conversion of the high concentration solutions (3-12%) of ammonium

sulfide that are produced in the hydrogen treatment of petroleum in which nitrogenous and sulfur-containing compounds are converted to ammonia and hydrogen sulfide. The process is capable of converting 99.99% of the hydrogen sulfide to elemental sulfur. During the development of this process, high temperature (320 to 430°F) operation was investigated to facilitate recovery of the heat of sulfide oxidation.

The nature of geothermal streams is extremely variable; sulfide concentration, temperature, pH, salinity, scaling properties and steam quality vary from source to source. Hydrogen sulfide concentrations vary from well to well and also vary during the life of a single well. For example, at The Geysers (California) the process would treat a super-heated steam while a mixture of steam and highly saline water would be treated at Cerro Prieto, Mexico. Because of the complex variation of parameters among geothermal sources, most of this laboratory pilot plant demonstration was performed with synthetic geothermal streams without scaling contaminants. Therefore, these results are applicable to a wide variety of geothermal sources. Specific applications can be studied further using actual geothermal liquid samples, best performed with a field test facility.

## B. Process Descriptions

The use of heterogeneous catalysis allows the use of several process systems such as water suspension, fluidized bed or fixed bed. The fixed bed system was chosen for the study because of the simplicity of construction and operation.

The process consists of adding controlled quantities of air to the mixed phase geothermal stream and passing it over a fixed bed of granular catalyst (see Figure 1). Oxidation of the hydrogen sulfide occurs, and the water-soluble oxysulfur compounds and elemental sulfur are washed into a high pressure separator where steam is separated from water, and the water is reinjected into a waste well. This system is applicable to low salinity streams containing fine particle solids and is non-scaling.

In cases where high salinity or dissolved silica and calcium salts present problems, stripping of the hydrogen sulfide from the geothermal brine by use of a steam recycle stream is suggested (Figure 2). The steam overhead of this system would then be treated. The treatment of a steam overhead requires a variation of the catalyst system. A recycle stream of liquid would be used to keep the catalyst wet. This system allows additional freedom in the operation because the environment on the catalyst can be altered by addition of reagents to the recycle stream.

## C. Chemistry

Hydrogen sulfide is a reactive toxic gas exhibiting strong reducing properties. Depending on the oxidant and reaction conditions, elemental sulfur, sulfur dioxide or sulfur trioxide can be produced. Many other oxysulfur compounds are known and these are combinations of the basic valence states (-2, 0, +4, +6). The profusion of oxysulfur compounds is due to sulfur being able to share its valence with other sulfur atoms.

The oxidation of hydrogen sulfide in aqueous and gas phases follows different paths, gas phase oxidation yields elemental sulfur, sulfur dioxide and sulfur trioxide while water phase oxidation mainly yields elemental sulfur, thiosulfate and sulfate. Water is a solvent entering into reaction with the sulfur species and stabilizing many of its forms.

The study of mixed phase oxidation of hydrogen sulfide is dominated by the aqueous sulfide oxidation chemistry. Many factors control the rate of oxidation and distribution of products, e.g., pH, presence of cations, temperature, dilution, etc. In the following discussion, thiosulfate and sulfate are the oxysulfur forms considered. Sulfur chemistry is marked by side product formation due to the interaction of many dissolved species. Of the major products of aqueous sulfide oxidation, thiosulfate is the most unstable, decomposing in acid to give elemental sulfur and sulfur dioxide or disproportionating to give sulfide and sulfate or a variety of products.

Decomposition: $H_2S_2O_3 \rightleftarrows H_2SO_3 + S^\circ \rightleftarrows H_2O + SO_2 + S^\circ$

Disproportionation: $4\ H_2S_2O_3 \rightarrow 3\ H_2SO_4 + H_2S + 4S^\circ$

The presence of a catalyst not only accelerates the oxidation rate of the sulfide, but also directs the reaction to produce a specific end product. The catalyst may be homogeneous, as in the case of Stretford process or heterogeneous, as in the present case of Sulfox. In the case of geothermal streams,

an insoluble heterogeneous catalyst is desirable because very large volumes of water can be treated at high temperatures without loss of catalyst. The ability to operate in media of various pH's is of considerable importance to the application of catalysis to sulfide oxidation since pH provides a means for controlling product distribution as shown in the following discussion of variables.

The oxidation of sulfide in:

1. Strongly basic solution (pH >11). The alkali metal sulfides can be oxidized to polysulfides but an attempted oxidation to elemental sulfur leads predominantly to the production of thiosulfate-sulfate. This is due to the attack of free caustic on the elemental sulfur present.

$$2\ Na_2S + O_2 + 4\ H_2O \rightarrow NaOH + 2S + 2\ H_2O$$

$$4\ S + 6\ NaOH \rightarrow Na_2S_2O_3 + Na_2S + 3\ H_2O \quad \text{(Back Hydrolysis)}$$

The oxidation of insoluble metal sulfides yields mostly sulfate due to the severity of the reaction conditions needed for significant oxidation rates.

2. Moderately basic to neutral pH. As the pH is reduced from 11 to 7, the production of elemental sulfur increases. Back hydrolysis becomes insignificant as free caustic is absent, and oxidation of hydrogen sulfide in alkali metal carbonate-bicarbonate solutions yields elemental sulfur and some thiosulfate. Temperature has a strong effect in this area as thiosulfate production is increased at elevated temperatures. The existence of the polysulfides becomes important at this pH range (at pH 8.3 polysulfide decomposes) as elemental sulfur in the form of polysulfide is more readily attacked than the solid form, which is out of phase with the aqueous solution.

3. Neutral to acid pH. As the acidity of the system increases, the production of elemental sulfur also increases. At a pH of 5, the stability of thiosulfate decreases to the point where sulfate, sulfide, elemental sulfur and sulfur dioxide are the major products. The sulfate and elemental sulfur are

stable, but the sulfur dioxide and sulfide do interact to form a complex mixture of colloidal elemental sulfur and oxysulfur compounds.

4. Effect of cation. The alkali metal cations affect the course of oxidation in caustic solution due to sulfide ion formation. Sodium, potassium and lithium sulfides give water-soluble products. At a given pH, ammonium cation favors the production of more elemental sulfur than the other cations. In solutions with a pH of less than 7, the cation effect has not been studied but the effect is believed to be insignificant as hydrogen sulfide is the main sulfide form.

5. Effect of temperature. Temperatures of less than 120°F tend to favor the formation of elemental sulfur. Even copper sulfide can be oxidized to give elemental sulfur at temperatures below 120°F. The attack of caustic on elemental sulfur becomes vigorous at ~150°F. At temperatures above 430°F, the formation of sulfate becomes dominant. This may be due to the thermal decomposition of thiosulfate.

$$4\ (NH_4)_2S_2O_3 \rightarrow 3\ (NH_4)_2SO_4 + H_2S + 4S^\circ$$

6. Sulfide concentrations. It has been observed that low sulfide concentrations (<100 ppm) tend to give water-soluble products.

7. $O/S^=$ ratio. The oxidation product distribution is responsive to the amount of oxygen available. The following gives the product distribution for the oxidation of ammonium sulfide in a solution of about pH 10.

$O/S^= = 1$, $2\ NH_4SH + O_2 \rightarrow 2\ S^\circ + 2\ NH_4OH$

$O/S^= = 2$, $2\ NH_4SH + 2\ O_2 \rightarrow (NH_4)_2S_2O_3 + H_2O$

$O/S^= = 3$, $2\ NH_4SH + 3\ O_2 + 2\ NH_4OH \rightarrow 2\ (NH_4)_2SO_3 + 2\ H_2O$

$O/S^= = 4$, $NH_4SH + 2\ O_2 + NH_2OH \rightarrow (NH_4)_2SO_4 + H_2O$

## IV. APPARATUS AND ANALYTICAL SCHEME

### A. Experimental Apparatus

The experimental program required an apparatus which controlled the addition of oxygen to a water-liquid mixture and passed that mixture over a catalyst bed. This was accomplished by producing a known quantity of steam at a given pressure and then reducing the temperature to give a steam-water mixture of known composition. Plant 672 (Figure 3) was designed to operate in such a manner.

Plant 672 is a highly automated plant, capable of operating continuously. The plant was constructed of 316 and 304 stainless steel and consisted of three sections: the feed systems, the reactor and the product train (see Figure 3).

#### 1. Feed Systems

a. Water charge. Deionized water was pumped out of a weighed stainless steel vessel(1) into a steam generator(2) where the water was completely vaporized. The production of steam was controlled by the input of water. The water was immediately and completely vaporized by impingement on a heated surface in the steam generator. The steam was swept out of the generator by the oxygen-nitrogen gas blended for the experiment as discussed below.

b. Oxygen feed system. The control of the amount of oxygen entering the system is critical. Oxygen was diluted to one and one half percent in nitrogen to allow precise control of low oxygen flow rates.

The amount of oxygen mixture entering the system was controlled by an electronic flow controller(5), which gave a constant measured flow of gas into the plant via the steam generator. The electronic device was later replaced by a capillary flow control system.

c. Salt feed system. The complete volatilization of water did not allow dissolved salts to be added through the water feed(1,2,3) system and so a separate salt feed system was installed(6). The ammonia needed for pH control was added as a concentrated ammonium carbonate solution and could be varied without interruption of plant operations.

d. $H_2S$ and $CO_2$ feed. Hydrogen sulfide and carbon dioxide were charged to the plant as a commercially prepared 1% $H_2S$-20% $CO_2$-79% $N_2$ gas mixture(7). The amount entering the system was controlled by an electronic flow meter(8). This mixture was introduced at a point just above the catalyst bed (see Figure 4) to minimize corrosion.

2. The Reactor

The reactor consisted of a 316 stainless steel tube. Steam, air and salt solution entered the catalyst bed through a preheater zone. A separate duct brought the $H_2S$-$CO_2$-$N_2$ mixture to a point above the catalyst bed and mixing of the components occurred as they were passed through the bed. The temperatures inside the reactor were controlled by an independently controlled, three-sectioned clam shell type electric furnace (Figure 3).

3. Product Train (Figure 3)

After leaving the reaction zone, the steam was cooled to ambient temperature and the gases and liquid then passed into a liquid level controller unit (LLC) (10). It was necessary to place filters and a vessel in the line between the furnace and liquid level controller to separate liquid sulfur, otherwise fouling of the downstream control valve occurred. The liquid level

controller separated liquid from the non-condensable gases, discharging the liquid into receivers(11) and the gas, reduced in pressure through a back pressure regulator(12), was caustic scrubbed(13). Any gas liberated by the liquid in the product receiver was also vented through the caustic scrubber. The volume of all off gas was measured by a wet test meter(14).

Plant 672 operated with the following feeds.

Water: deionized.

Salt solution: an aqueous solution of ammonium carbonate containing 15.7 gm per Kg of solution.

Oxygen: 1.5% $O_2$ in nitrogen.

Hydrogen sulfide: 1.08% $H_2S$ in a 20% $CO_2$-79% $N_2$ (mole %) gas mixture.

## B. Analysis

### Sampling

The plant was sampled every six hours. A portion of the total liquid effluent was taken for analysis. The KOH scrubbers were replaced. The sulfur in the KOH scrubber was used to determine the efficiency of sulfide removal as most of the liquid product samples were acidic and contained little or no hydrogen sulfide.

### Feed

The feed to the plant consisted of deionized water, an ammonium carbonate solution and two gaseous mixtures, one consisting of a 1.08% $H_2S$, 20% $CO_2$, 79% $N_2$ (mole %) mixture and the other of 1.5% oxygen in $N_2$. The feed gases were analyzed by gas chromatography.

### Gas Product

The samples of the exit gas were taken in a pressurized bomb and analyzed for oxygen by gas chromatography. The hydrogen sulfide content was obtained by scrubbing the off gas through a double KOH scrubber (25%) and analyzing the caustic by the turbidimetric method in which all forms of sulfur were converted, by hydrogen peroxide oxidation, to sulfate. The sulfate content was determined by an optical turbidimeter after barium sulfate formation.

### Liquid Product

a Total sulfur content. The total sulfur content of the liquid product was determined by the same turbidimetric method used for the KOH scrubbers.

b Sulfide Content. In the few cases where hydrogen sulfide was found in the liquid product, concentration was determined by silver nitrate titration.

c Thiosulfate content. Standard starch-iodine procedures were used. In the few cases where sulfide was present, the sulfide was first removed by cadmium precipitation.

d Sulfate. Sulfate analysis was a gravimetric procedure based on the precipitation of barium sulfate.

## C. Plant Operations

The major portion of the work was carried out at 320°F and 100 psig. The temperature was suggested by the operations at The Geysers, California, a major geothermal installation, and the 100 psig pressure was selected to provide a mixed phase operation. The $CO_2/H_2S$ ratio was also suggested by The Geysers operations. Ammonium was the cation used in the Sulfox process and since ammonia occurs naturally in The Geysers steam, it was used to control the pH of the pilot plant system. Ammonia is a unique base in that at the plant operating conditions the ammonia distributes between the liquid and gas phases. Each "run" designates a new loading of catalyst. At the time of product sampling the amount of nitrogen exiting the plant was balanced against the volume of feed nitrogen.

## V. RESULTS

The results are presented and discussed in the following sections in the order indicated below:

A. Rate of Reaction

B. Uncatalyzed Reaction

C. Oxygen Content of Product Steam

D. Elemental Sulfur Production

E. Catalyst Stability

F. Inspection of Used Catalyst

G. Effect of $NH_3/S^=$ Molar Ratio and pH

H. Effect of $O/S^=$ Molar Ratio and pH

I. Effect of Pressure

J. Effect of Temperature

K. Effect of Salt

L. Sodium Bicarbonate as an Alkalizing Agent

M. Deposition of Sulfur on the Catalyst

The data and discussion have been organized to indicate their relevance to the evaluation of process chemistry.

## A. Rate of Reaction

The fundamental question of this study was whether the fixed-bed catalyst employed would oxidize hydrogen sulfide at an economically attractive rate. The experimentation has shown conclusively that the Sulfox catalyst system is highly active and does economically oxidize hydrogen sulfide. This is clearly shown in Table 1. In each case complete sulfide conversion is achieved at an $O/S^{=}$ ratio greater than 1.4.

Even at the maximum feed rate of 400 cc/hour water containing 500 ppm hydrogen sulfide, complete conversion was achieved over the minimum catalyst loading of 10 cc, 40 LHSV (Table 1). [LHSV = Liquid Hourly Space Velocity = volume of mixed phase feed, expressed as the liquid equivalent, passed over a volume of catalyst per hour].

This report shows that the presence of sulfide affects the formation of sulfate ($O/S^{=}$ study, Table 6) and that the presence of elemental sulfur on the catalyst modifies activity (Tables 11 and 12). Thus, the concentration of sulfide partially controls the products formed and the way the oxygen is utilized.

Table 1

Rate of Reaction

Catalyst: Geocat I & II[1]
Feed: $H_2S$ = 536 ppm
$CO_2/S^{=}$ = 20[2]
Feed rate: 400 cc water/hr.

Conditions: Temperature: 311°F[3]
Pressure: 100 psig[4]

| Catalyst Volume, cc | $O/S^{=}$[6] | $NH_3/S$ | pH | Effluent LHSV[7] | $S^{=}$ Conversion |
|---|---|---|---|---|---|
| 50 | 6.3 | 22 | 10 | 8 | 100 |
| 50 | 1.9 | 5.4 | 9 | 8 | 100 |
| 50 | 1.9 | 0 | 3 | 8 | 100 |
| 10 | 1.9 | 1 | 6 | 40 | 100 |
| 10 | 1.9 | 1 | 6 | 40 | 100 |

[1]No significant difference was noted between these two catalysts as to reaction rate or product distribution.

[2]The increase of the $CO_2$ concentration by the addition of ammonium carbonate was considered nominal.

[3]All temperatures in this report are ±5°F.

[4]All pressures are ±5 psig.

[5]Each test series was begun with a freshly charged catalyst bed.

[6]Atom ratio

[7]Liquid hourly space velocity (volume of mixed phase feed, expressed as the liquid equivalent, passed over a volume of catalyst per hour)

## B. The Uncatalyzed Reaction

$H_2S$ in steam was reported to be 30-45% oxidized by air without a catalyst in a Teflon-lined reactor ("Removal of Hydrogen Sulfide from Simulated Geothermal Brines", Contract EG-77-C-02-4464). In the current experiments, three runs were made with and without the catalyst being present (void reactor). The results shown in Table 2 indicate that the presence of Geocat I results in the complete conversion of the sulfide in the stream while the void metal reactor and the void Teflon reactor gave only partial conversion from 38 to 50% (Table 2). The Teflon-lined reactor minimized wall catalysis although nickel in the feed (7 ppm derived from a 304-SS charger) may have had a catalytic effect. Experiments with Geocat I in the Teflon-lined reactor could not be conducted because of equipment complications (a portion of the feed by-passed the catalyst bed around the Teflon liner).

## Table 2

### Catalyzed and Uncatalyzed Sulfide conversion

Catalyst: 10 cc Geocat 1
Feed: $H_2S$ = 536 ppm
$O/S^{=}$ = 1.0
$NH_3/S^{=}$ = 1.0
$CO_2/S^{=}$ = 20
Feed Rate: 400 cc water/hr.

Conditions: Temperature: 320°F
Pressure: 100 psig

| Period | Catalyst | LHSV | Reactor Construction | $O/S^{=}$ | $H_2S$[3] Conversion |
|---|---|---|---|---|---|
| A | Geocat I | 40 | 304-316 SS[1] | 1.0 | 100 |
| B | | | | | 96 |
| A | None | - | 304-316 SS[1] | 1.0 | 38[3] |
| B | | | | | 38 |
| C | | | | | 50 |
| A | None | - | Teflon liner[2] | 1.0 | 50 |
| B | | | | | 43 |

[1]Spacers used to fill voids of the reactor were either 304 or 316 stainless steel.

[2]Glass spacer used to fill voids.

[3]Based on commercially prepared $H_2S$ blend and potentiometric silver titration of KOH scrubbers.

## C. Oxygen Content of Product Steam

The presence of oxygen in steam containing sulfide increases its corrosiveness. Considerable effort was made to obtain oxygen concentration data, however, time did not permit definite resolution of this question. Data obtained by sampling of the non-condensable gases with a high pressure bomb indicated oxygen in the ppm range. However, these results may have been influenced by the reaction between hydrogen sulfide, oxygen, water vapor, and the stainless steel walls of the bomb. Special procedures beyond the scope of this program (the residual oxygen content of the product steam was not a specification in this program) will be needed to obtain definite data.

## D. Elemental Sulfur Production

Elemental sulfur was not collected as a product and appears in the tables as a calculated quantity. Proof was needed to support this. A special test, verified this assumption. This test was made at conditions chosen to give sulfur products in all plant effluents.

In the following table (Table 3) the elemental sulfur was calculated according to the following formula: Total feed sulfide - (KOH $S^{=}$ + liquid product sulfur) = elemental sulfur. At the end of Period B, the plant was washed with hot caustic, thus solubilizing the elemental sulfur, and the total sulfur content of the caustic was taken as originating as elemental sulfur.

The catalyst and plant scrapings (corrosion products) were found to contain 0.02 moles of sulfur.

Table 3

## Elemental Sulfur Production

Catalyst: 10 cc Geocat I

Feed: $H_2S$ = 500 ppm
$O/S^{=}$ = 1.0
$NH_3/S^{=}$ = 1.0
$CO_2/S^{=}$ = 20
Feed rate: 400 cc water/hr.

Conditions: Temperature: 320°F
Pressure: 100 psig Per.A
180 psig Per.B

### Period A

| | | | |
|---|---|---|---|
| Mole $S^{=}$ in | 0.36 | | |
| Mole Water Sol. Sulfur Compound Wt. | | 0.09 | |
| Mole $S^{=}$ out | | 0.06 | |
| | | 0.15 | |
| Mole S° by Difference | | | 0.21 |

### Period B

| | | | |
|---|---|---|---|
| Mole $S^{=}$ in | 0.56 | | |
| Mole Water Sol. Sulfur Compound Wt. | | 0.174 | |
| Mole $S^{=}$ out | | 0.31 | |
| | | 0.484 | |
| Mole S° by Difference | | | 0.076 |

| | |
|---|---|
| Total mole elemental sulfur by calculation | 0.286 |
| Mole elemental sulfur measured via caustic wash | 0.27 |

## E. Catalyst Stability

Two long-term tests were made, 900 hours and 1340 hours. In both cases, the catalyst had full activity at check conditions (Table 4).

Table 4

## Stability of Catalyst Activity

Catalyst: Geocat 1 50 cc
Feed: $H_2S$ = ~500 ppm
$O/S^{=}$ = 1.9
$NH_3/S^{=}$ = 1.0
$CO_2/S^{=}$ = 20
Feed rate: 400 cc water/hr.

Conditions: Temperature: 320°F
Pressure: 100 psig

| Test | Hrs. on Stream | $H_2S$ Converted % |
|---|---|---|
| A | 270 | 98 |
| | 882 | 100 |
| | 900 | 98 |
| B | 294 | 100 |
| | 1314 | 100 |

## F. Inspection of Used Catalyst

After the Geocat I catalyst had been in the plant for 900 hours of operation it was removed and inspected. The catalyst was found to be free flowing. Analysis of the used catalyst from that test indicated only minimal changes in catalyst composition. The used catalyst could not be differentiated from fresh catalyst by visual inspection.

## G. Effect of pH or $NH_3/S^=$ Molar Ratio

The product distribution resulting from the oxidation of hydrogen sulfide was determined, to a great extent, by the pH of the effluent, experimentally controlled by the ammonia/hydrogen sulfide feed ratio (Figure 6). Alkaline conditions favored the formation of water-soluble products, such as thiosulfate and sulfate while acid conditions directed the oxidation to the production of elemental sulfur. The effect of high ammonium ion concentrations, as a salt of the neutral pH compound thiosulfate, did not alter the pH of the effluent (Table 11).

### Alkaline Region

The nearly complete conversion of sulfide to water-soluble products (Table 5) was characteristic of dilute sulfide oxidation. If the concentration of hydrogen sulfide rises above one percent, polysulfide formation is observed. The rate of sulfide oxidation and oxygen demand was highest in this pH region due to the formation of water-soluble products that kept the catalyst surface clean.

### Neutral pH Region

The production of water soluble sulfur compounds was dominant at neutral pH (Table 5).

### Acid Region

The oxidation of sulfide ion has a pH lowering effect in going from a weakly ionized acid ($H_2S$, $K_1 = 5.7 \times 10^{-8}$) to moderate acid ($H_2S_2O_3$, $K = 1 \times 10^{-2}$) and finally to a strong acid ($H_2SO_4$, $K_1 = 4 \times 10^{-1}$). As the effluent becomes acidic, the tendency to form elemental sulfur is increased. This may be due to the increased instability of oxysulfur compounds at lower pH's. Even sulfuric acid can react with hydrogen sulfide to yield sulfur. Thiosulfate disproportionates to sulfide, sulfite and sulfate thus increasing

the demand for oxygen. A slight decrease in catalyst activity was noted. This may be due to an increased deposition of elemental sulfur on the catalyst or an actual loss of activity at highly acid pH's.

Table 5

Effect of pH and $NH_3/S^=$ Molar Ratios on
Sulfide Conversion and Product Distribution

Catalyst: Geocat I, 50 cc
Feed: $H_2S$ = 510 ppm
$O/S^=$ = 1.9
$CO_2/S^=$ = 20
Feed rate: 400 cc water/hr.

Conditions: Temperature: 311°F
Pressure: 100 psig

| Feed | | | Product[3] | | | |
|---|---|---|---|---|---|---|
| $NH_3/S^{=2}$ | pH Feed | Effluent pH | $S_2O_3^=$ | $SO_4^=$ | $H_2S$ | S° |
| 22[1] | 10 | 9.6 | 73 | 17 | 0.0 | 10 |
| 5.4 | 7.8 | 9.3 | 83 | 10 | 0.0 | 7 |
| 5.4 | 7.8 | 9.3 | 87 | 8 | 0.0 | 5 |
| 1.9 | 7.1 | 8.9 | 58 | 12 | 0.0 | 30 |
| 1.9 | 7.1 | 8.9 | 71 | 12 | 0.0 | 17 |
| 1.0 | 6.5 | 6.6 | 57 | 10 | 0.0 | 33 |
| 0.5 | 6.0 | 3.0 | 33 | 15 | 0.0 | 52 |
| 0.5 | 6.0 | 3.0 | 12 | 28 | 0.0 | 60 |
| 0.5 | 6.0 | 3.0 | 12 | 26 | 0.0 | 62 |
| - | 5.6 | 3.0 | 2 | 26 | 1.0 | 72 |
| - | 5.6 | 3.0 | 2 | 18 | 5.0 | 75 |

[1] $O/S^=$ = 6.7 Air was used instead of oxygen blend, all others $O/S^=$ = 1.9
[2] Ammonia added as ammonium carbonate $NH_3/CO_2$ = 3/2
[3] Sulfur in product expressed as percent of sulfide in the feed.

## H. $O/S^{=}$ Atom Ratio

The study of the effects of the $O/S^{=}$ atom ratio was carried out under mildly acidic conditions so that severe corrosion of the plant would not occur. Previous work had shown that a $NH_3/S^{=} = 1$ would yield an effluent of pH 6.0 at an $O/S^{=}$ atom ratio of 2.

The study of the effects of the $O/S^{=}$ atom ratio on the product distribution of a liquid feed to Plant 672 containing carbon dioxide, ammonia and hydrogen sulfide is reported in Table 6. Complete sulfide oxidation was attained with an $O/S^{=}$ atom ratio in excess of 1.4. Decreasing the $O/S^{=}$ atom ratio decreased the production of sulfate when sulfide appeared in the product.

Table 6

The Effect of the $O/S^{=}$ Ratio on Product Distribution and Sulfide Conversion

Catalyst: Geocat I, 50 cc
Feed: $H_2S$ = 510 ppm
$NH_3/S^{=}$ = 1.0
$CO_2/S^{=}$ = 20
Feed rate: 400 cc water/hr.

Conditions: Temperature: 311°F
Pressure: 100 psig

| Conditions | | Product Distribution[1] | | | | |
|---|---|---|---|---|---|---|
| $O/S^{=}$ | Reaction Temp. °F | S° | $S_2O_3^{=}$ | $SO_4^{=}$ | Product pH | $H_2S$ Conversion |
| 1.9 | 309 | 35% | 33% | 32% | 5.0 | 100% |
| 1.9 | 307 | 23 | 54 | 23 | 5.8 | 100 |
| 1.9 | 307 | 31 | 50 | 19 | 5.8 | 100 |
| 1.9 | 313 | 5 | 76 | 17 | 5.8 | 98 |
| 1.33 | 306 | 46 | 50 | 4 | 5.8 | 99.9 |
| 1.33 | 311 | 41 | 53 | 6 | 5.8 | 99.9 |
| 1.26[2] | 307 | 42 | 35 | 23 | 5.5 | 100 |
| 1.26 | 304 | 46 | 33 | 21 | 5.5 | 100 |
| 0.9 | 315 | 42 | 46 | 0 | 5.7 | 88 |
| 0.9 | 313 | 23 | 44 | 22 | 5.8 | 89 |
| 0.9 | 307 | 30 | 51 | 5 | 5.8 | 86 |
| 0.36 | 307 | 26 | 46 | 3 | 5.8 | 75 |
| 0.36 | 309 | 31 | 42 | 4 | 5.8 | 77 |

[1]As % of the sulfide content of the feed.
[2]The catalyst had been operating at an $O/S^{=}$ = 1.9 and was still "oxygen rich", a characteristic noted in other experiments.

## I. Effect of Pressure

Pressure did not have a significant effect on the rate of reaction as long as a liquid phase was present (Table 7). When the pressure was dropped below the autogenous steam pressure[1], thus vaporizing all of the water, the catalyst lost much of its activity (Table 7). The function of a water phase is not merely to wash products of oxidation away. With only hydrogen sulfide, water and carbon dioxide passing over the catalyst, immediate deactivation was noted when the pressure was dropped below the autogenous pressure. Since the drop in activity was immediate, it can be deduced that liquid water phase is required for the most efficient catalytic reaction.

[1]Autogenous steam pressure = at a given temperature, the pressure at which steam and water are in equilibrium.

Table 7

Effect of Pressure

Catalyst: Geocat I, 50 cc
Feed: $H_2S$ = 391 ppm
$O/S^{=}$ = 1.9
$CO_2/S^{=}$ = 20
Feed rate: 400 cc water/hr.

| Conditions | | | | | Product[1] | |
|---|---|---|---|---|---|---|
| Press. psig | Temp. °F | $NH_3/S^{=}$ | $S_xO_y^{=}$[2] | S° | $H_2S$ Conv. | pH |
| 180 | 343 | 1.0 | 69% | 22% | 91% | 5.0 |
| 100 | 320 | 1.0 | 43 | 56 | 99 | 5.7 |
| 90 | 316 | 1.0 | - | - | 90 | 6.4 |
| 80 | 322 | 1.0 | 43 | 4 | 47 | 5.9 |
| 75 | 314 | 1.0 | 130 | - | 79 | 5.9 |
| 70 | 307 | 1.0 | 32 | 15 | 48 | 6.0 |
| 180 | 312 | 0.0 | 18 | 82 | 100 | 3.1 |
| 100 | 305 | 0.0 | 12 | 88 | 100 | 3.2 |
| 80 | 320 | 0.0 | 11 | 57 | 68 | 3.0 |
| 75 | 318 | 0.0 | 7 | 61 | 68 | 3.0 |
| 71 | 307 | 0.0 | 12 | 66 | 78 | 3.1 |

[1] As percent of feed sulfide.
[2] $S_xO_y^{=}$ denotes all water sulfur species determined by the turbidimetric method.

## J. Effect of Temperature

The major effect of temperature (as in the case of pressure) is its control of the presence of liquid water. As soon as the temperature, for a given pressure, allows the formation of a mixed phase, the activity of the catalyst was increased. Temperature also has an effect on product distribution; the lower the temperature, the greater the production of elemental sulfur (Table 8).

Table 8

Effect of Temperature

Catalyst: Geocat I - 50 cc
Feed: $H_2S$ = 450 ppm
$O/S^{=}$ = 1.9
$CO_2/S^{=}$ = 20
Feed rate: 400 cc water/hr.

| Conditions | | | Product[2] | | | | |
|---|---|---|---|---|---|---|---|
| Temp.[1] °F | Press. psig | $NH_3/S=$ | $S_xO_y^{=}$ | S° | $S^{=}$ | Conv. of $S^{=}$ | pH |
| 246 | 100 | 1.09 | 18% | 82% | 0.0% | 100% | 6.6 |
| 316 | 100 | 1.09 | 43 | 56 | 1 | 99 | 5.7 |
| 248 | 180 | 1.09 | 29 | 71 | 0.0 | 100 | 5.9 |
| 284 | 180 | 1.09 | 29 | 71 | 0.0 | 100 | 5.9 |
| 343 | 180 | 1.09 | 69 | 31 | 0.0 | 91 | 5.0 |
| 302 | 77 | 0.0 | 12 | 53 | 35 | 65 | 3.1 |
| 291 | 77 | 0.0 | 52 | 42 | 6 | 94 | 3.0 |
| 284 | 77 | 0.0 | 43 | 52 | 5 | 95 | - |
| 268 | 77 | 0.0 | 6 | 93 | 1 | 99 | 3.1 |

[1]Reactor temperature.
[2]Percent of feed sulfide.

## K. Effect of Salt

The effect on sulfide conversion of the presence of two compounds, ammonium thiosulfate and sodium sulfate, was investigated. Five and 10 wt.% ammonium thiosulfate solutions, respectively, were fed to Plant 672 and sulfide conversion remained high, 93% and 88% (Table 9). However, when sodium sulfate in 5% and 10% solutions was fed to Plant 672, sulfide conversion was diminished to 85% and 80%. During all of these runs, the salts deposited on the catalyst bed due to vaporization of the salt solutions.

Table 9

## Effect of Salt

Catalyst: Geocat I, 50 cc
Feed: $H_2S$ = 500 ppm
$O/S^{=}$ = 1.9
$CO_2/S^{=}$ = 20
Feed rate: 400 cc water/hr.

Conditions: Temperature: 311°F
Pressure: 100 psig

| Salt | Concentration Wt.%[1] | $H_2S$ Conversion | Product pH |
|---|---|---|---|
| $(NH_4)_2S_2O_3$ | 5 | 93%[1] | 5.7 |
| $(NH_4)_2S_2O_3$ | 10 | 88 | 6.1 |
| None | 0 | 100 | 2.7 |
| $Na_2SO_4$ | 1 | 85 | 3.2 |
| $Na_2SO_4$ | 5 | 80 | 3.4 |
| $Na_2SO_4$ | 10 | 77 | 2.6 |

[1]Based on water in feed.

## L. Sodium Bicarbonate as an Alkalizing Agent

Previous work on the oxidation of alkali metal sulfides had shown a marked difference between sodium and ammonia systems. The alkalizing agent in Plant 672 was changed from ammonium carbonate to sodium bicarbonate; both solutions were equimolar and charged at the same rate. Sulfide appeared in the KOH scrubbers and the production of water soluble products increased (Table 10 and Figure 8).

Table 10

Effect of Alkalizing Agent on Product Distribution

Feed: Water containing ~500 ppm $H_2S$
$CO_2/S^{=}$ = 20
$O/S^{=}$ = 1.9
Feed rate: 400 cc/hr.

Conditions:
Temperature: 320°F
Pressure: 100 psig

| Alkalizing Agent | Product[1] $S_xO_y^{=}$ | Product[1] $S^{\circ}$ | $H_2S$ Conversion |
|---|---|---|---|
| $(NH_4)_2CO_3$ ($NH_3/S$ = 1) | 51 | 49 | 100 |
| $NaHCO_3$ (Na/S = 1) | 82 | 15 | 97 |

[1]Based on percent of sulfide in the feed.

## M. Deposition of Sulfur on the Catalyst

Sulfur deposition on the catalyst interferes with activity when the system is oxygen starved (below an $O/S^{=}$ of 1.4).

Table 11

Effect of Sulfur Deposition on Catalyst Activity

| Catalyst | $O/S^{=}$ | $H_2S$ Conversion |
|---|---|---|
| Geocat I | 1.9 | 100% |
| " | 1.75 | 100 |
| " | 0.9 | 85 |
| " | 1.0 | 81 |
| " | 1.0 | 66 |

The effect may become more pronounced with longer operation, thus in 78 hours of operation at an $O/S^{=}$ ratio of 1 recovery was immediate but after 180 hours of operated at the reduced $O/S^{=}$ ratio, the recovery of the catalyst to full activity was delayed.

Table 12

Recovery of Catalyst Activity After Sulfur Deposition

| Test | Catalyst | $O/S^{=}$ | $H_2S$ Conversion |
|---|---|---|---|
| A | Geocat II* | 1.0 | 80% |
| " | " | 1.9 | 100 |
| B | Geocat I | 1.0 | 60 |
| " | " | 1.0 | 86 |
| " | " | 1.5 | 64 |
| " | " | 2.1 | 76 |

*Geocat II is closely related to Geocat I. Little difference was expected and none was observed

# VI DISCUSSION

## A. Evaluation of Results Based on Process Requirements

The overall objective of the program was to develop a process for upstream treatment of geothermal steam based on Sulfox chemistry. The first phase of the program has been successful in meeting most of its goals in a laboratory and pilot plant evaluation. The following discussion will be based on the DOE contract, DE-AC03-79ET27203, the quoted objectives are from the statement of work.

1. "Applicable to vapor dominated and liquid dominated reservoirs."

   The process operates at full efficiency with the presence of some liquid water.

2. "Allow a maximum of 5% discharge of the total raw Geothermal fluid Hydrogen sulfide ($H_2S$) loading."

   Most operations in the pilot plant study resulted in a 100% conversion of sulfide, i.e. 0% discharge.

3. "The temperature range where the process is to operate efficiently shall be between 100°C to 350°C (212°F to 662°F)."

   The study demonstrated successful operation from 250°F to 350°F and 77 to 180 psig. Operation below 250°F would lead to solid sulfur deposition with loss of activity. The pilot plant's gas supply was not designed for operations above 200 psig. The cost of adapting the plant for high pressure operation was much greater than the funds available for this study.

4. "Applicable to raw geothermal fluid upstream of the energy extraction process."

The process is applicable to, but not restricted to upstream processing.

5. "Capable of long term continuous reliable operation with minimum maintenance required."

The catalyst maintained full activity and structural integrity for test period of 1300 hours. A similar catalyst employed commercially for the oxidation of organic sulfur compounds has given an economically acceptable life.

6. "Simple operation of the process to allow the minimum of operator training."

The process can be automated and the function of the operator could be limited to inspection of operations.

7. "The process is to produce a minimum of waste."

The process can be made to produce elemental sulfur or salt solution of thiosulfate or sulfate. The disposal of these salts will vary with the nature of the geothermal stream being treated, for example, where brines are reinjected into the reservoir, addition of these salts will not cause a problem.

8. "Process is to minimize the loss of energy by the geothermal fluid."

The pressure drop in Plant 672 was less than one pound. Commercial operation with appropriately sized catalyst should produce comparable performance. Experimentation to date confirms operation at autogenous geothermal conditions with minimal energy loss expected.

9. "Process is to consume a minimum of energy and raw materials to operate".

The only raw material critical to the operation of the process is oxygen. In certain cases, where high rates of oxidation are needed or the production of water-soluble sulfur compounds is desired, sodium carbonate or ammonia may be added to the system. The use of these reagents will probably be stoichiometric to the sulfide content of the geothermal stream. Their use would also simplify metallurgical design requirements.

10. "The process operation shall not induce or cause other environmental problems."

The products of oxidation are elemental sulfur, thiosulfate and sulfate. Thiosulfate and sulfate can be disposed of in the brine reinjected into the reservoir. In those cases where reinjection is prohibited, the disposal method must allow for the presence of metal sulfides. The process itself can be varied to produce the least objectionable waste within the steam product requirements.

## B. Operating Cost Estimation

The contract "Statement of Work" specifies the following task: "Using the laboratory data, perform a cost estimate for operating the system using steam with 300 ppm of $H_2S$: in addition the steam will include carbon dioxide ($CO_2$) and ammonia ($NH_3$) in concentrations which are indicative of actual geothermal steam."

The specific sizing of a commercial facility to remove hydrogen sulfide from geothermal steam upstream of a 55 MW turbine is greatly dependent upon parameters which must be determined in a field test which utilizes authentic geothermal steam. This test program would determine, under field conditions, the rate of reaction and the rate of deactivation of the catalyst, both of which dictate the critical sizing of reactors. The rate of catalyst deactivation also determines the frequency of catalyst replacement, an important factor in the operating costs.

The laboratory experimental program demonstrated that the process could be operated with the only consumed reagent being oxygen added as air. If maximization of water-soluble products is desired, a preferred mode of operation may be to add enough ammonia to neutralize the acid components generated from the oxidation of the hydrogen sulfide. Therefore, a stoichiometry of two molecules of ammonia are required for each molecule of hydrogen sulfide. If the average condition present at The Geysers Unit 7 is used as an example (250 wt. ppm $H_2S$ instead of 300 ppm, 150 wt. ppm $NH_3$) at the 55 MW scale (1 million pounds of steam per hour) then an average of 100 ppm of ammonia would be required. This amount of ammonia is equal to 100 pounds per hour or 792,000 lbs (396 tons) per 330 day year. Assuming $190/ton for ammonia, this operating cost is $75,240 per year. No other chemicals or oxygen are required. The total

utilities requirement, aside from negligible water and steam, are the electrical needs for pumps, compressors, etc. These costs and others such as labor, maintenance, and capital charges are based on actual design parameters which must be determined from a detailed engineering study or from the results of the field test.

## C. Field Test Pilot Plant Design

The "Statement of Work" specifies: "Provide a design for a field test pilot plant based upon laboratory data."

The apparatus represented in Figure 9 was designed to provide adequate flexibility to examine a number of parameters required for the design of a commercial facility.

A. Oxygen/hydrogen sulfide ratio as it affects $H_2S$ conversion, distribution of products, and oxygen content of effluent

B. Alkalizing agent type and its ratio to $H_2S$ as it affects $H_2S$ conversion, distribution of products, and oxygen content of effluent

C. Recycle rate of liquid phase and blowdown rate

D. Reaction Rate

E. Catalyst deactivation rate at "best" conditions, and modes of reactivation

F. Catalyst bed configuration

G. Performance of various catalyst formulations

H. Catalyst bed capacity for $H_2S$ and $O_2$

I. Materials of construction

J. Production and separation of sulfur

K. Ability of the fixed bed to accommodate "rock dust"

## D. Commercialization Plan

The "Statement of Work" also specifies: "Provide a plan and schedule beginning with the pilot plant operation through commercial sale and operation."

| Duration | Completion Date | Geothermal Project Development Steps |
|---|---|---|
| months | month | |
| | | Bench scale construction |
| | | Bench scale test operation |
| | | Field test conceptualization |
| | | Field test facility (FTF) process flow diagram |
| 2 | 2 | FTF engineering design |
| 5 | 7 | FTF procurement construction |
| 7 | 14 | FTF operation |
| 1 | 15 | Process decision |
| 1 | 16 | Commercial unit (CU) conceptual design |
| 1 | 17 | CU PFD |
| 7 | 24 | CU engineering design |
| ~11 | ~35 | CU procurement, construction |
| begins | ~35 | CU operation |

## E. Proposed Modes of Operation

The nature of geothermal streams varies and each requires a modification of the process to attain maximum efficiency. Three main types of geothermal streams will be discussed: (1) saturated and slightly superheated steam typical of The Geysers (California) area, (2) the hot highly saline solutions of the Imperial Valley area, and (3) low sulfide, fairly clean, solutions. The proposals set forth in the following sections are theoretical and based on chemical principles. With aappropriate modification Sulfox technology should be applicable to all three types of geothermal streams.

### 1. Saturated Steam Treating Process

The steam in The Geysers area varies in the hydrogen sulfide content, degree of superheating, and presence of rock dust, boron, ammonia and carbon dioxide in varying amounts. The process described in Figure 10 is recommended. Maintenance of an alkaline pH in the recycle stream would depress the production of elemental sulfur and increase the rate of reaction and oxygen utilization in the system. A filter in the recycle stream could be installed to remove suspended solids (rock dust) from the system.

### 2. Treatment of a Highly Saline Brine

The highly saline brines containing dissolved silica, such as those found at Cerro Prieto, Mexico, probably cannot be treated by direct contact with the catalyst due to severe scaling and high total dissolved solids. It is suggested that a portion of the clean steam be utilized to strip the $H_2S$ out of the brine if extremely low level $H_2S$ control is desired. It has been observed in Plant 672 operations that hydrogen sulfide is readily removed from hot aqueous

solution when carbon dioxide is present. The reactor would be a duplicate of that shown for The Geysers but would operate at an acid pH to promote the production of elemental sulfur. Condensate water would be used to reduce the salt loading of the recycle stream (or the recycle stream may be eliminated) and the acid water be added to the plant feed for acidification. In those cases where the brine is reinjected without atmospheric contact, the saturated steam process (see previous stection) would be used.

### 3. Low Sulfide, Low Mineral Content Streams

Geothermal waters may be treated by direct contact with the reactor (Figure 3). As long as scaling does not occur, gas, steam and liquid may be mixed with air and passed over a catalyst bed to remove its hydrogen sulfide content.

## VII. CONCLUSION

1. The Proprietary UOP test catalysts promoted the air (oxygen) oxidation of hydrogen sulfide in a mixed phase geothermal stream.

2. The distribution of products of sulfide oxidation is controlled by pH; alkaline media producing mainly water soluble products and an acid environment producing mainly elemental sulfur.

3. Complete oxidation of the sulfide content of a stream containing ~500 ppm of $H_2S$ was achieved at an $O/S^{=}$ ratio of 1.4 or greater.

4. Catalytic activity was not significantly affected by changes in pressure, temperature within the pilot plant operating conditions reported (248 to 356°F and 70 to 180 psig) as long as a mixed phase was present.

5. Sodium bicarbonate, as an alkalizing agent, produced more water soluble products than ammonium carbonate at similar conditions.

6. A simple catalytic process for the air oxidation of hydrogen sulfide in a mixed phase geothermal stream has been demonstrated. Testing of the catalyst at elevated temperatures (480°F to 660°F) and in the presence of interfering substances requires a comparison of life tests which would best be undertaken utilizing an authentic geothermal stream.

FIGURE 1

# PROCESS DESIGN FOR TREATMENT OF A MIXED PHASE GEOTHERMAL STREAM OF LOW SALT CONTENT

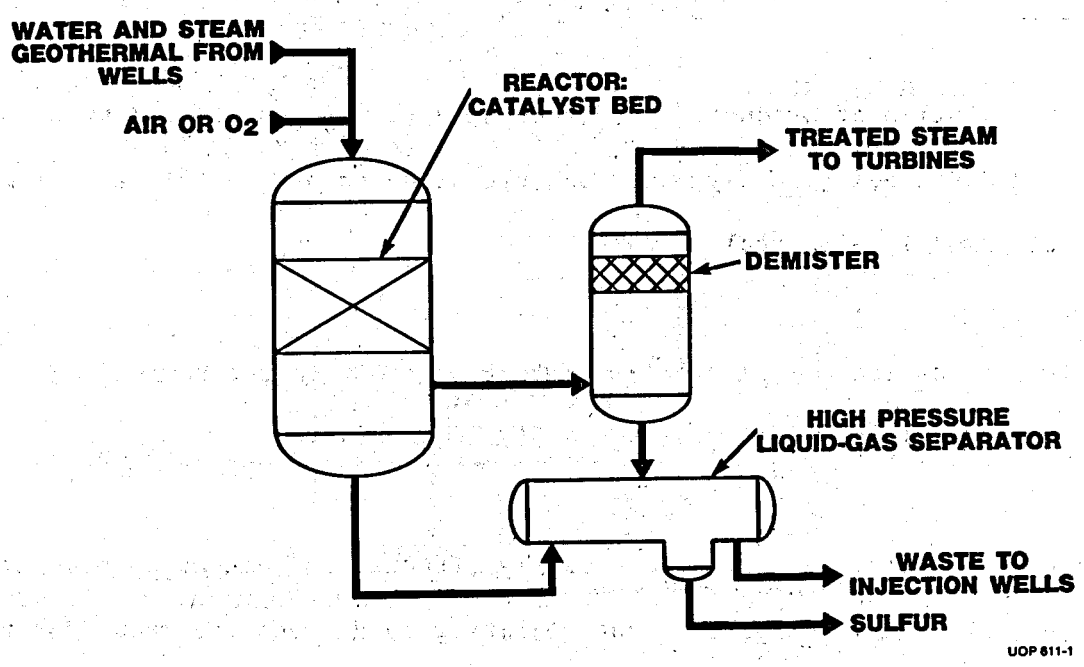

FIGURE 2

# PROCESS DESIGN FOR TREATMENT OF HIGH SALINITY OR SCALING GEOTHERMAL STREAMS

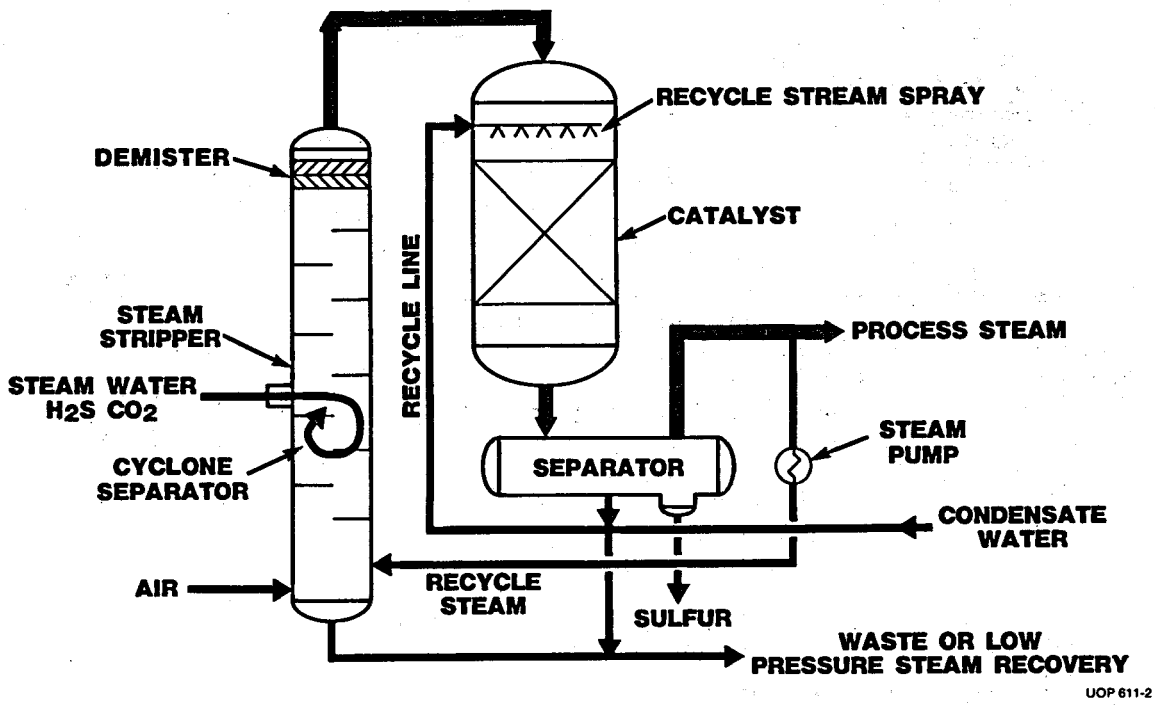

FIGURE 3

# PLANT 672
# GEOTHERMAL PILOT PLANT

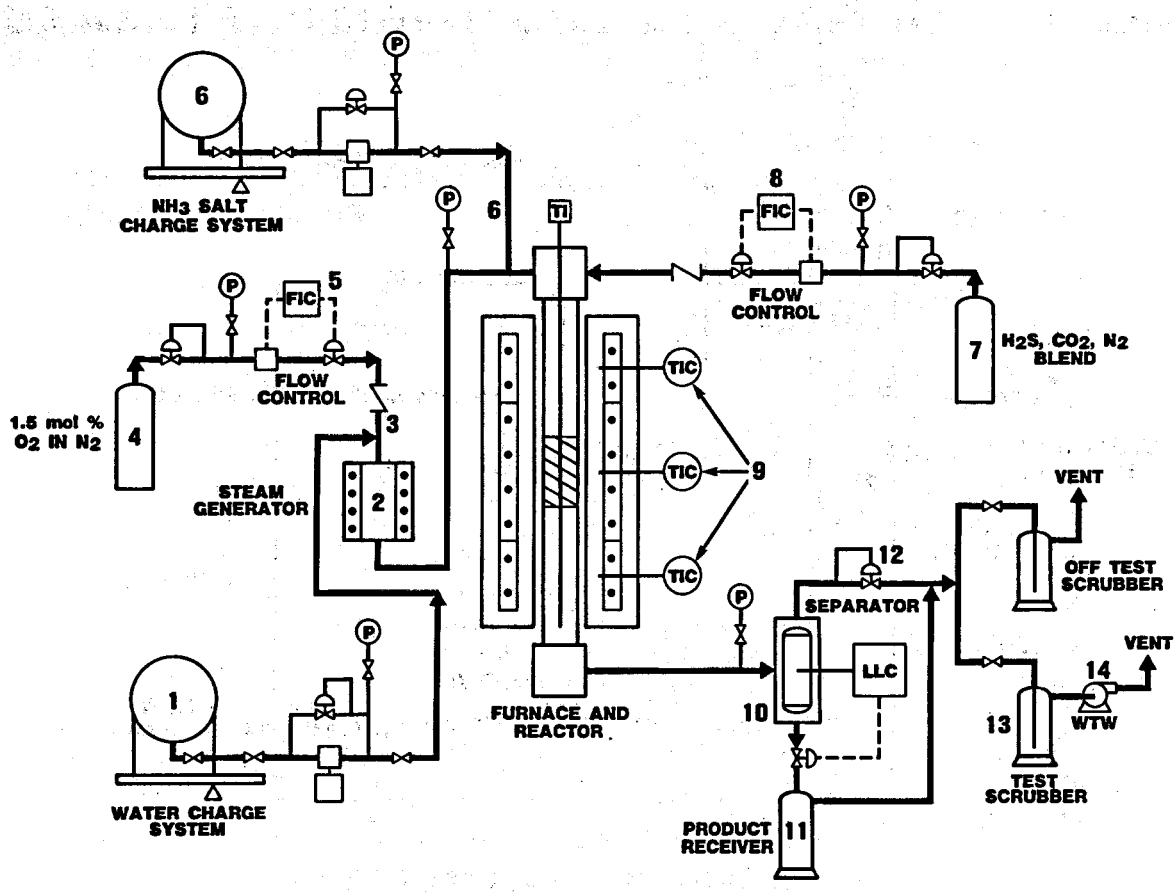


***LEGEND***

P = PRESSURE GAUGE
FIC = FLOW INDICATOR CONTROLLER
= DOWN STREAM PRESSURE CONTROLLER
= UPSTREAM PRESSURE CONTROLLER
TIC = TEMPERATURE INDICATOR CONTROLLER
TI = TEMPERATURE INDICATOR
LLC = LIQUID LEVEL CONTROLLER
WTW = WET TEST METER (MEASUREMENT OF GAS VOLUME)

UOP 611 3

# FIGURE 4

# EFFECT OF AMMONIA / $H_2S$ RATIO ON PRODUCT DISTRIBUTION

**CATALYST:** GEOCAT I, 50 cc
**FEED:** $H_2S$ = 510 ppm
$O/S^{=}$ = 1.9
$CO_2/S^{=}$ = 20

**CONDITIONS:** TEMPERATURE: 311°F
PRESSURE: 100 psig

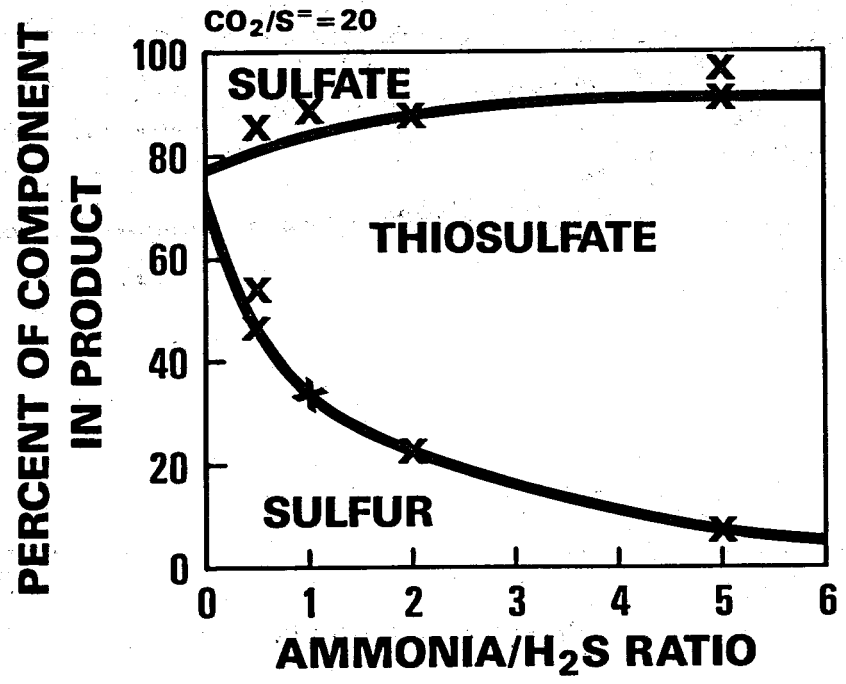


PCH-1
UOP 611-8

## FIGURE 5

# EFFECT OF SALTS ON HYDROGEN SULFIDE CONVERSION

**CATALYST:** GEOCAT I, 50 cc
**FEED:** $H_2S$ = 500 ppm
$O/S^{=}$ = 1.9
$CO_2/S^{=}$ = 20

**CONDITIONS:** TEMPERATURE: 311°F
PRESSURE: 100 psig

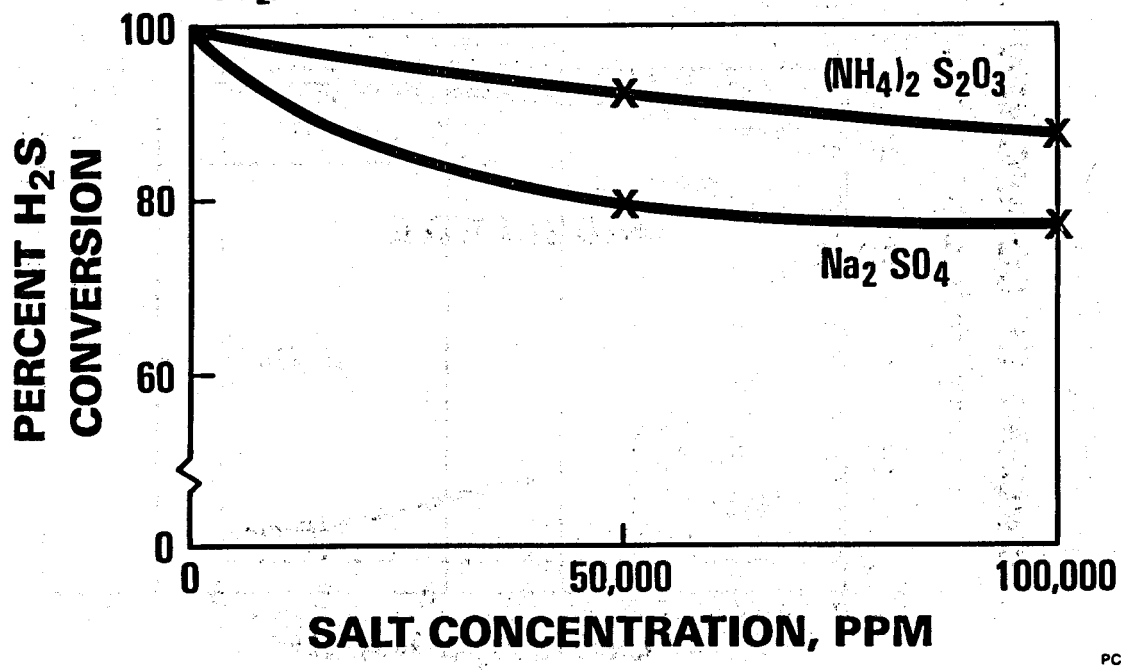


PCH-4
UOP 611-9

# FIGURE 6

# EFFECT OF ALKALIZING AGENT ON PRODUCT DISTRIBUTION

**FEED:** 500 ppm $H_2S$
$CO_2/S^{=} = 20$
$O/S^{=} = 1.9$

**CONDITIONS:** TEMPERATURE: 320°F
PRESSURE: 100 psig

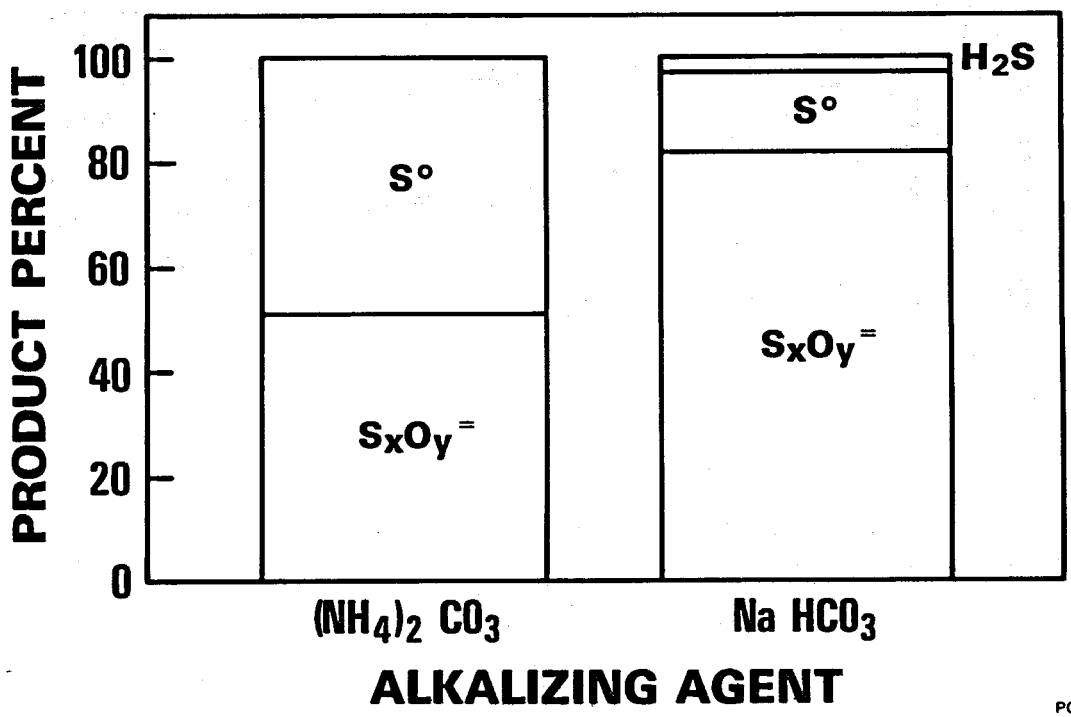


PCH-5
UOP 611-7

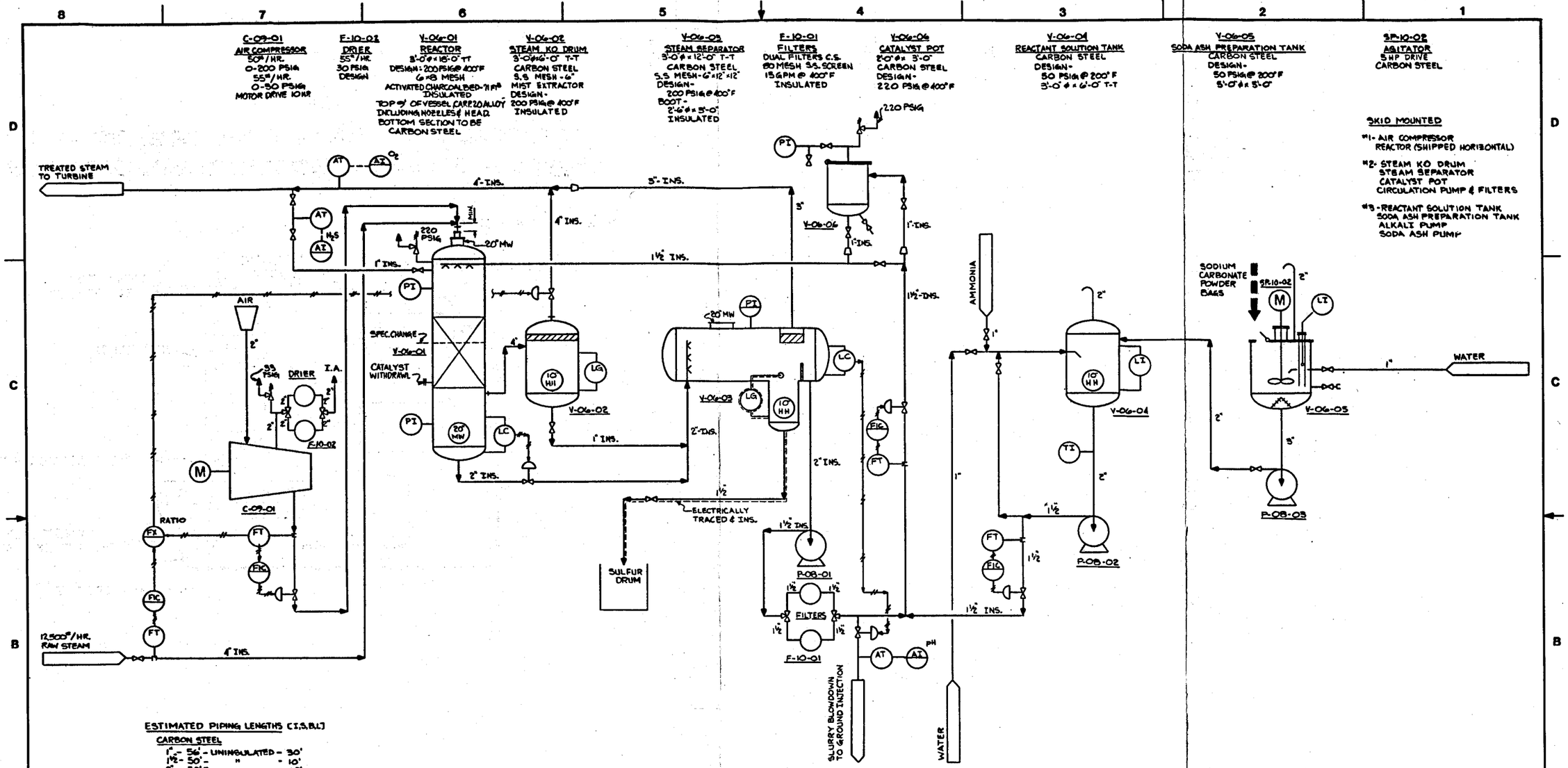


# FIGURE 7

| DRAWING NUMBER | DESCRIPTION | NO. | DATE | DESCRIPTION | BY | CH'D | APPROVED | NO. | DATE | DESCRIPTION | BY | CH'D | APPROVED |
|---|---|---|---|---|---|---|---|---|---|---|---|---|---|
| | | | | | | | | | 2/7/81 | REVISED FOR ESTIMATE | RMB | | SKK |
| | | | | | | | | 8 | 1/26/81 | FOR ESTIMATE | RMB | | |
| REFERENCE DRAWINGS | | ISSUES AND REVISIONS | | | | | | ISSUES AND REVISIONS | | | | | |

**Procon** Incorporated
Des Plaines, Illinois
PROCESS FLOW DIAGRAM
HYDROGEN SULFIDE REMOVAL PROCESS
SONOMA/LAKE COUNTIES

SCALE DWG. NO. 5-7208-01.00-001-D
SHEET 1 OF 1
REVISION 0

FIGURE 8

# PROCESS DESIGN FOR TREATING A VAPOR PHASE GEOTHERMAL STREAM

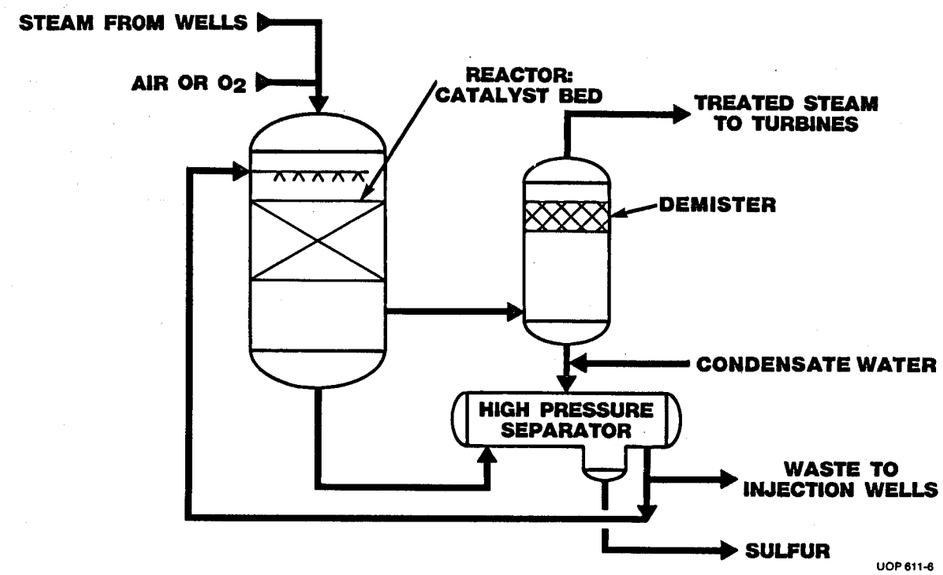




*U.S. GOVERNMENT PRINTING OFFICE: 1981-740-145/2199