NOTICE

CERTAIN DATA CONTAINED IN THIS DOCUMENT MAY BE DIFFICULT TO READ IN MICROFICHE PRODUCTS.

EGG-M-89331
CONF-891208--35

DISCLAIMER

This report was prepared as an account of work sponsored by an agency of the United States Government. Neither the United States Government nor any agency thereof, nor any of their employees, makes any warranty, express or implied, or assumes any legal liability or responsibility for the accuracy, completeness, or usefulness of any information, apparatus, product, or process disclosed, or represents that its use would not infringe privately owned rights. Reference herein to any specific commercial product, process, or service by trade name, trademark, manufacturer, or otherwise does not necessarily constitute or imply its endorsement, recommendation, or favoring by the United States Government or any agency thereof. The views and opinions of authors expressed herein do not necessarily state or reflect those of the United States Government or any agency thereof.

EGG-M--89331

DE91 001846

INTEGRATION OF HEAT PUMPS INTO INDUSTRIAL PROCESSES

R. N. Chappell
U.S. Department of Energy
S. J. Priebe
EG&G Idaho, Incorporated
Idaho Falls, Idaho

Received by OSTI

NOV 0 5 1990

ABSTRACT

The Department of Energy and others have funded studies to assess the potential for energy savings using industrial heat pumps. The studies included classifications of heat pumps, economic evaluations, and placement of heat pumps in industrial processes. Pinch technology was used in the placement studies to determine the placement, size, and type of heat pumps for a given application. There appears to be considerable scope for heat pumping in several industries, but, where maximum process energy savings are desired, it is important to consider heat pumping in the context of overall process integration.

INTRODUCTION

A new perception of the potential for heat pumps in industrial processes is emerging from two studies now completed and a third that is under way. The studies are sponsored by the U.S. Department of Energy's Office of Industrial Programs (OIP) and are directed toward determining the function of heat pumps with respect to industrial processes. OIP has had an ongoing program for the development of industrial heat pump technology since 1975. Initially this involved development of a few specific heat pump cycles that were designed to fit specific applications. A portion of the current effort is now directed toward determination of the general process conditions heat pumps need to meet.

In the first study, at the Idaho National Engineering Laboratory (INEL), EG&G Idaho developed an approach to establish maximum economic temperature lifts for state-of-the-art heat pumps (1,2). In the second DOE project, TENSA Services of Houston, Texas, studied the optimum placement of heat pumps into several industrial processes, including chemical, petrochemical, food, and pulp and paper (3). The study had two complementary goals. The first goal was to determine the potential for state-of-the-art heat pumps and conditions that must exist for their successful implementation. The second goal was to assist DOE in defining research and development needs for advanced heat pumps. In a third effort, now under way, OIP is studying 14 specific industrial sites in greater detail. This project involves several contractors and will continue through implementation at some of the sites.

This paper is limited to industrial heat pumps, which include only those integrated into industrial processes and exclude all those used for space conditioning including industrial and commercial space conditioning. Further, only heat pumps used for process heating are considered. Those used for industrial cooling or refrigeration are excluded.

Work supported by the U.S. Department of Energy, Office of Industrial Programs, under DOE Contract No. DE-AC07-ID01570.

INDUSTRIAL HEAT PUMPS

There are many ways to pump heat (4–10): the reverse Rankine cycle, reverse Brayton cycle, absorption cycles, mechanical vapor recompression, steam ejectors, and even magnetic cycles to name a few. Because of this, selecting the best heat pump for an application seems difficult; however, by categorizing and generalizing, many decisions relative to selection can be made without considering all the various specific designs.

It is useful to classify heat pumps into three major categories based on how the heat pump measure of merit, the coefficient of performance (COP), has been traditionally defined. A generic installation of an electrically driven heat pump from the first category is shown in Figure 1(a). The portion included in the dashed line, the heat engine or power cycle, is located at the power plant and work, W, is delivered to the heat pump by electrical transmission. The COP for this type is traditionally defined as the heat delivered by the heat pump, Q_2, divided by the work required to drive the heat pump, W. Since about two-thirds of the prime energy from the fuel is lost at the power plant and in the electric transmission system, COPs must be above three for "energy breakeven" or the point at which energy delivered exceeds energy supplied.

The second category is composed of those driven by prime heat through a heat engine integrated with the heat pump, Figure 1(b). These are usually referred to as heat amplifiers. The heat engine could be a conventional gas turbine with exhaust heat recovery adding to the heat delivered by the heat pump, or it could be a chemical heat engine like those used in absorption heat pumps. In any event the COP is traditionally defined as the total heat delivered, $(Q_4 + Q_2)$ divided by the prime heat supplied, Q_1. With this definition, the COP need only exceed unity to achieve energy breakeven.

The third category is composed of those driven by process heat, Figure 1(c). In these heat pumps, the heat that drives the heat engine is at a lower temperature than the heat delivered by the heat pump. These are referred to as heat transformers or temperature amplifiers. The COP in this case is traditionally defined as the heat delivered by the heat pump, Q_2, divided by the process heat supplied to the heat pump, Q_1, plus the process heat supplied to the heat engine, Q_3. With this definition the COP need only exceed zero to achieve energy breakeven, and it is physically impossible to achieve a COP greater than 1.0.

From the above it can be seen that if one were told that a heat pump application achieved a COP of 2.0, it may be considered as not worthwhile if it was electrically driven, very worthwhile if it was a heat amplifier, and physically impossible if it was a heat transformer. While the use of three definitions of COP may seem awkward, a categorization based on these definitions is convenient because it is based on three basic ways that energy flows between the heat pumps and the processes, and energy flows are of prime concern to process designers.

Material flows in the process are another important aspect of heat pump integration. Many heat pumps use special working fluids which are isolated from the process by heat exchangers. These will be referred to herein as closed cycles. Other heat pumps use heat transfer streams (steam, for example) or product streams (a

MASTER

DISTRIBUTION OF THIS DOCUMENT IS UNLIMITED

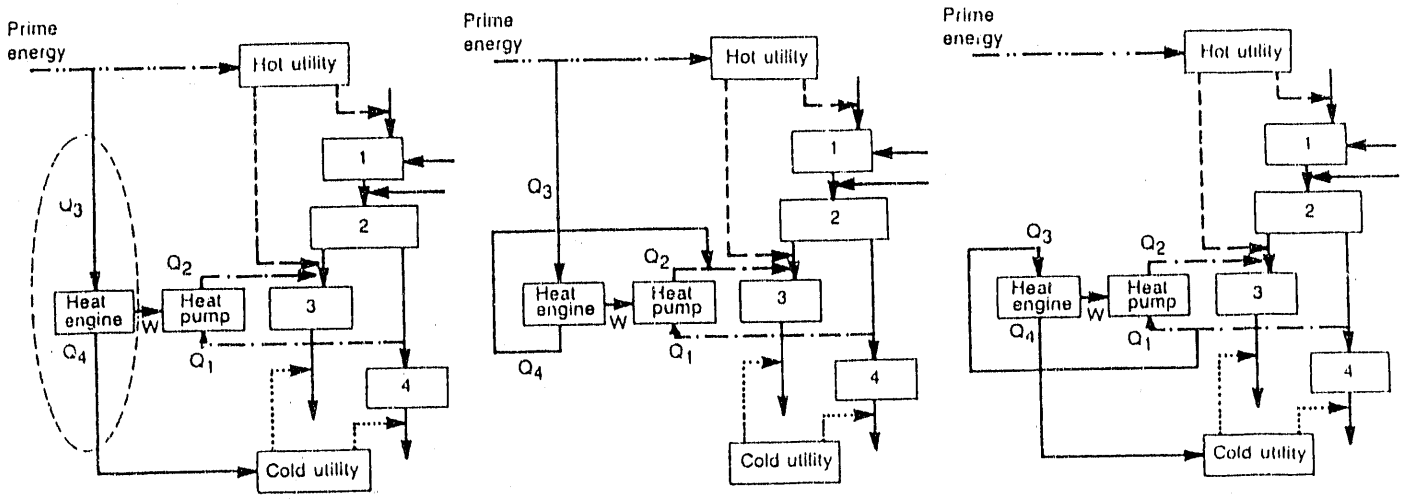

(a) An electrically driven heat pump. The heat engine is located off-site.

(b) A heat amplifier

(c) A heat transformer

9 8736

Figure 1. Heat recovery heat pumps in a generic industrial application.

hydrocarbon, for example) from the process as working fluids. These are referred to as open or semi-open cycles. [Mechanical vapor recompression (MVR) falls in the open cycle category.] Figure 2 shows three configurations of a reverse Rankine cycle heat pump illustrating closed, semi-open, and open heat pump cycles. Heat flows to and from the process are labeled as in Figure 1. Since the driving mechanism is not shown, any of these could be either electrically driven, prime heat driven, or process heat driven and their performance could, therefore, be defined by any of the three COPs given above. Of the three cycle configurations, the closed cycle is the most capital expensive, and the least capital expensive is the open cycle.

Another advantage of the open cycles is that the temperature lift across the compressor is lower than the closed cycle, which could result in less compressor work. For example, referring to Figure 2(a), if the intake temperature (temperature of Q_1) is 120°C and the delivery temperature (temperature of Q_2) is 140°C, the temperature entering the compressor would be about 115°C and the temperature leaving the compressor about 145°C for a lift across the compressor of 30°C. Referring to Figure 2(c), if the inlet and delivery temperatures were the same (120°C and 140°C, respectively), the lift across the compressor would only be 20°C or two-thirds that of the closed cycle. In some cases superior characteristics of the closed cycle working fluid offset this advantage, but in many industrial applications, the open cycle heat pumps enjoy a performance advantage as well as a capital cost advantage. The closed cycle is the most easily applied because no special requirements are needed by the process streams; however, open or semi-open cycles are usually much more cost effective because of lower initial investment and better efficiency.

Before leaving the general discussion of heat pumps, something should be said about similarities and differences between chemical and mechanical heat pumps. Figure 3(a) schematically represents the familiar mechanical, reverse Rankine cycle driven by a heat engine. Figure 3(b) shows the somewhat less familiar absorption cycle. The absorption cycle configuration shown is usually used in the heat amplifier configuration. Note the similarity with the reverse Rankine cycle. The absorber, desorber, and pump in the chemical heat pump replace the heat engine and compressor in the mechanical heat pump, and the evaporator and condenser perform identical functions in both. Figure 3(c) shows the absorption cycle used in the heat transformer configurations. Note that the roles of the absorber and desorber, and the condenser and evaporator are reversed.

The heat flows (Q_1, Q_2, Q_3, and Q_4), and therefore the COPs, are the same whether the heat pumps are chemical or mechanical. The effects on the processes are also the same. The only instances where the processes are affected are if the driving method is changed from electricity to prime heat or to process heat, or if the cycle is opened to admit process streams into the heat pump to act as working fluids. While open cycles are very common in mechanical heat pumps, they are not available in current chemical heat pumps because of the special properties required of the absorbent and absorbate. New designs using, for example, zeolites as absorbents and process streams as absorbates may change this, however.

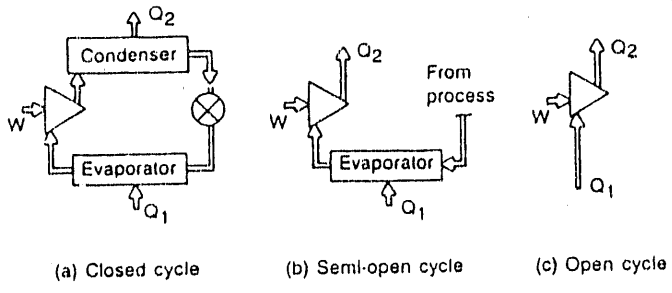

(a) Closed cycle

(b) Semi-open cycle

(c) Open cycle

Figure 2. Closed, semi-open, and open reverse. Rankine cycle heat pump configuration.

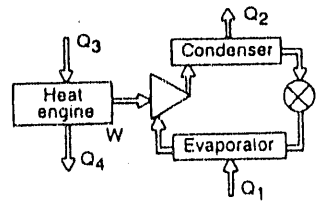

(a) Mechanical

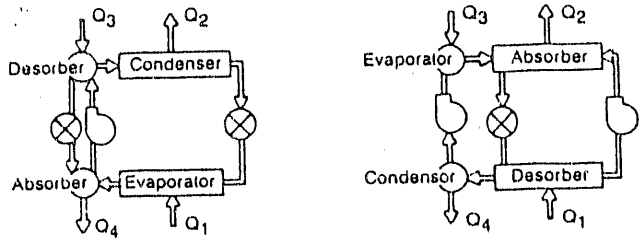

(b) Chemical heat amplifier

(c) Chemical heat transformer

Figure 3. Chemical and mechanical heat pump configurations.

In summary, industrial heat pumps used to provide process heat can be categorized in terms of their COP's which is in accordance with heat flows to and from the heat pump and in accordance with how they are driven. Both mechanical and chemical heat pumps can fit into any of the three categories. Another categorization involves the relative isolation of the heat pump from the process streams. These two general categories seem to have the most influence on heat pump integration into industrial processes.

PROCESS INTEGRATION OF HEAT PUMPS

In the second and third studies mentioned in the introduction, pinch technology (11-16) is used to evaluate possible uses of heat pumps in industrial processes. Other approaches to process integration could have been used for the evaluation, but pinch technology was found to be a simple and effective approach. The use of this approach assumes that the process can be heat integrated, that is, heat can be cascaded from a heating utility down through the unit operations to the cooling utilities as depicted in Figure 4(a). In some processes heat integration is not practical because of capital cost, operational limitations, safety, or other reasons.

The following is a very brief introduction to pinch technology and an equally brief overview of implications for process integration of heat pumps (3,17,18).

Pinch Technology

If heat flows in processes like that shown in Figure 4(a) are placed on a temperature versus heat flow plot, lines like those shown in Figure 4(b) result. The arrowheads designate the sense of the heat flows. Those pointing downward and to the left represent streams being cooled. (Horizontal lines represent condensing streams.) Those pointing upward and to the right represent streams being heated. (Horizontal lines represent evaporating streams.) When these heat flow lines are added together, two lines like those shown in Figure 4(c) result, which are referred to as the composite curves. The two lines can be shifted horizontally until they just touch as shown. The point at which they touch is called the "process temperature pinch" from which comes the term "pinch technology." The pinch divides the process into an area above the pinch requiring heat and referred to as a "sink" and an area below the pinch giving up heat, referred to as the "source." The horizontal distance between the lines at the top is the thermodynamically minimum heating utility, Q_H, and the horizontal distance between the lines at the bottom is the thermodynamically minimum cooling utility, Q_C.

If the horizontal difference between the lines on the composite curve are plotted on the same axes the so called grand composite curve (GCC) shown in Figure 4(d) results. The GCC is particularly useful in illustrating the effect of heat pumps on the process. The process temperature pinch is where the line just touches the vertical axis on the GCC. Both the heating and cooling utilities can be reduced by pumping heat from the source below the pinch to the sink above the pinch.

Heat Pumps and the GCC

At this point it would be useful to examine how the addition of a heat pump to a process affects the grand composite curve for that process. For the purposes of this paper, the heat pump will rely chiefly on latent heat changes, as in a reverse Rankine cycle heat pump. The effect of the heat pump is to add one hot stream above the pinch and one cold stream below the pinch. These are shown by the dashed line in the new grand composite curve in Figure 4e. The effect on the grand composite curve is dramatic. That portion of the curve above the temperature of the heat pump outlet is shifted to the left by the amount of heat delivered by the heat pump. That portion of the curve below the temperature of the heat pump inlet is shifted to the left by the amount of heat received by the heat pump. The magnitude of the shifts is equal to the potential reduction in hot and cold utilities, and represents energy (and possibly capital) savings. Of course energy must be expended to lift the heat, and capital must be expended to install the heat pump. The differences between these savings and expenditures determine to a large extent the benefits of the heat pump to the process, although other benefits such as emission reductions and product quality improvement as in lumber drying (19)) can also accrue to the process.

The electrically driven heat pump is shown relative to the grand composite curve in Figure 5(a). A heat balance shows that the net reduction in the heating utility will be equal to the heat delivered above the pinch, Q_2, which is equal to the heat removed from below the pinch, Q_1, plus the electricity required to drive the heat pump, W (assuming 100 percent efficiency in the electric motor and gearbox). The reduction in the cooling utility is just the amount of heat removed from below the pinch, Q_1. Reduction can be stated algebraically as $\Delta Q_H = Q_2 = Q_1 + W$ and $\Delta Q_C = Q_1$.

The electrically driven heat pumps are the most common types in use today, and they are usually of the MVR type, which are dominated by the compressor as shown in Figure 5(b). These heat pumps reduce process thermal energy requirements and use more expensive electric energy. This means that their operating costs (and therefore the heat pump lift) and capital costs must be very low, which usually makes the simple MVR type the most attractive.

A heat amplifier is shown relative to the grand composite curve in Figure 6(a). In this case the net reduction in the heating utility is equal to the heat delivered above the pinch by the heat pump, Q_2, plus the heat exhausted above the pinch by the heat engine, Q_4, minus the heat required to drive the heat engine, Q_3. A heat balance (assuming ideal conditions) shows the net reduction in the heating utility to be $\Delta Q_H = Q_2 + Q_4 - Q_3$. The net reduction in the cooling utility is simply Q_1 or expressed algebraically $\Delta Q_C = Q_1$. Because $Q_3 - Q_4 = W$ and $Q_2 = Q_1 + W$, $\Delta Q_H = Q_1 + W - W = Q_1$, which means that the heating utility and the cooling utility are both reduced by the same amount.

Steam ejectors are heat amplifiers commonly found in use today (5). Figure 6(b) is a diagram of such a heat pump with the heat flows identified. In these devices the heat engine and heat pump are combined in one simple piece of equipment. This simplicity tends to make them attractive in spite of their low thermal efficiency. Steam ejection is sometimes referred to as thermal vapor recompression or TVR. Other heat amplifiers using gas turbine engine drives have been installed in industrial processes, but these are often too capital expensive to be economically attractive at today's energy prices. However, sometimes the turbine exhaust can be used directly in a drier above the pinch which can be cost effective (8).

A heat transformer is shown relative to the grand composite curve in Figure 7(a). In this case the heat engine is located below the pinch. The net reduction in the heating utility can be expressed as: $\Delta Q_H = Q_2$. The net reduction in the cooling utility can be expressed as: $\Delta Q_C = Q_1 + Q_3 - Q_4$. Because $Q_3 - Q_4 = W$ and $Q_1 = Q_2 - W$, $\Delta Q_C = Q_2 - W + W = Q_2$. Again the net reductions in the heating and cooling utilities are equal.

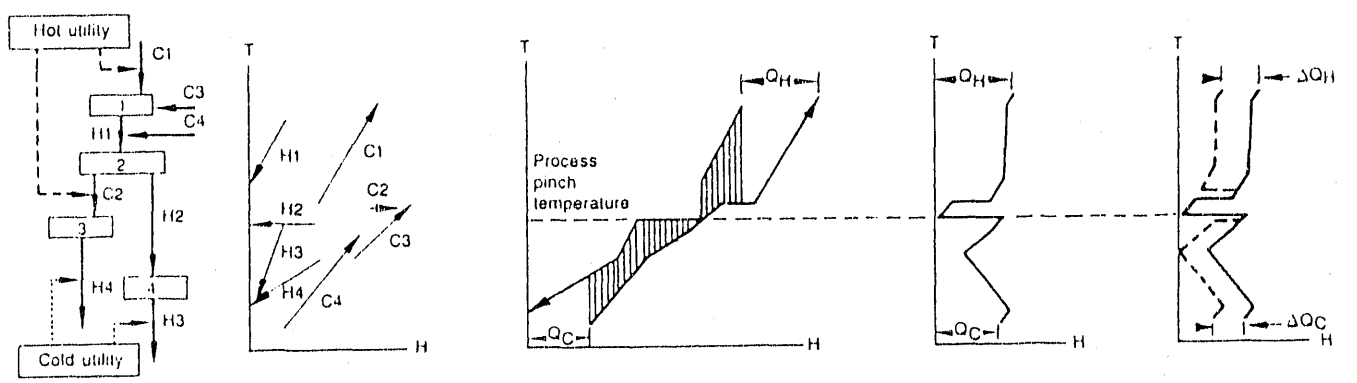

(a) Generic process (b) Steam heat flows (c) Composite curves (d) Grand composite curve (e) Effect of heat pumps

Figure 4. Process energy targeting using Pinch technology.

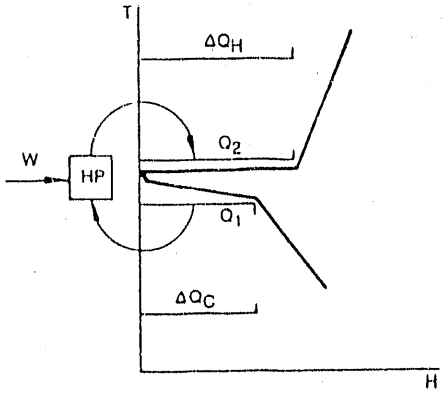

(a) An electrically driven heat pump relative to a grand composite curve

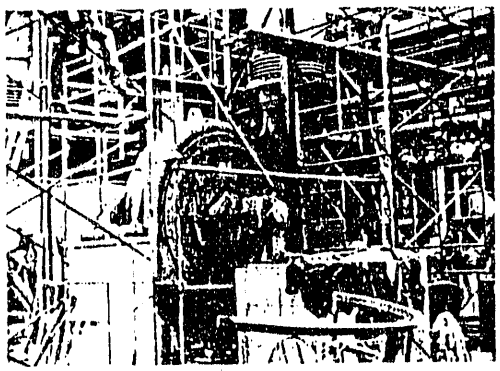

(b) An electrically driven mechanical vapor recompression heat pump being installed

Figure 5. Electrically driven heat pumps.

Chemical heat pumps of this type [Figure 3(c)] have been installed in Europe (9) and a mechanical heat pump of this type was developed by Mechanical Technology Inc. (MTI) in the U.S. under DOE sponsorship (7). Negotiations for installation of the MTI heat pump are under way at this writing. A conceptual diagram of the MTI heat pump is shown in Figure 7(b).

The big advantage of heat transformers is usually considered to be that neither prime energy nor valuable process heat from above the pinch is required to drive them. However, they tend to be large because of low driving temperatures. Although heat amplifiers use prime energy (say steam or natural gas), they can reduce the prime energy requirements (steam or natural gas) of the total process and, in that sense, have the same overall effect as the heat transformers. A decision as to which should be used should be based on (a) process characteristics, (b) capital and operating expenditure versus total process capital and operating savings, and (c) other benefits which may accrue.

Unit Operations Versus Integrated Processes

As used here, a unit operation is a device that performs a chemical and/or physical action on a process stream. Examples include distillation columns, evaporators, dryers, reactors, etc. Furthermore, an integrated process as defined here consists of a heating utility, a cooling utility, and a collection of one or more unit processes, integrated for energy management. An industrial plant consists of one or more integrated processes.

State-of-the-art heat pumps are applicable to many unit processes that involve latent heat changes, such as distillation columns. However, to achieve minimum energy consumption the integrated process should be considered as a whole. This will be illustrated in the following analysis.

First, a stand-alone unit operation will be examined, Figure 8. Many unit operations e.g., thermal separation processes, receive heat, Q_H, at a given temperature and reject nearly the same quantity of heat, Q_C, at a lower temperature. Therefore the heat added at the hot end simply cascades through and is rejected at the cold end. A stand-alone unit operation of this type exhibits a pinch within the unit operation at some intermediate temperature as shown in Figure 8(a). If a heat pump is placed

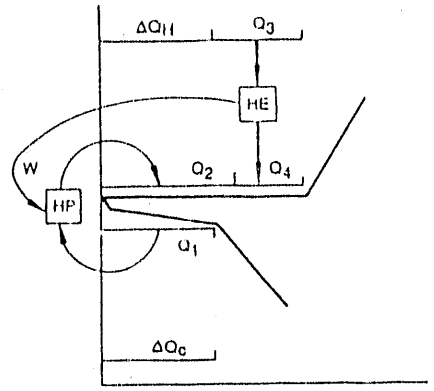

(a) A heat amplifier relative to a grand composite curve

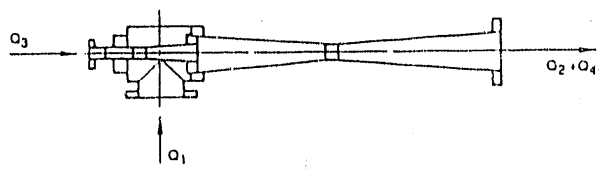

(b) An example of a steam ejector which is often used as a heat amplifier

Figure 6. Heat amplifiers.

around the unit operation, the hot and cold utilities required by the unit operation will be reduced by Q_2 and Q_1, as shown in Figure 8(b). In this situation a heat pump placed on a stand-alone unit operation can be beneficial, and indeed, this is a common practice in industry today. Vendor-supplied distillation columns or evaporators often employ a heat pump to reduce the energy use of the unit.

However, comparative or greater energy savings may be possible by integration of the unit operation into the process rather than by coupling the unit process with a heat pump. Figure 9 shows two source and sink diagrams for an integrated process with one unit operation separated out. In Figure 9(a), the unit operation is located across the process pinch. The high temperature heat required to effect the separation crosses the process pinch and is rejected below. Figure 9(b) shows the same unit operation located entirely above the process pinch. Rejected heat from the unit process shown is used to drive another unit process (not shown) located above the pinch, thereby reducing the heating utility requirement over Figure 9(a). The cooling utility requirement is also reduced because less heat is being transferred across the pinch. Similarly, a unit operation placed entirely below the pinch will also result in lower hot and cold utilities. The implications of this analysis are important. If a unit operation is located across the pinch, an attempt should be made to modify the process to move that unit operation either above or below the pinch. There are times, of course, when it will not be possible to shift a unit operation relative to the process pinch. However, in this case, as with the stand-alone case, there is potential for heat pumps. If a unit operation must be located across the process pinch, then, as shown in Figure 10(a), a heat pump placed around that unit operation can offer significant energy savings.

If the unit operation is entirely on one side of the pinch, then a heat pump placed around that unit will also be entirely on one side of the pinch. Pumping heat from source to source or sink to sink will not save energy (15); therefore, a heat pump on a single, properly integrated unit operation will likely be unattractive.. However, this does not mean that there is no place for heat pumps in well-designed, properly integrated processes. Indeed, there is still good potential for heat pumps as shown in Figure 10(b). If two unit operations are located on opposite sides of the pinch, then a heat pump placed between the two can again offer significant energy savings. It is even possible for a heat pump to receive heat from several unit operations below the pinch and then deliver heat to several unit operations above the pinch.

This analysis shows the importance of considering an entire integrated process before placing a heat pump. While the practice of placing heat pumps on individual unit operations will show energy savings if the unit operation is not heat integrated, Figure 8(b), this practice will save energy only in heat integrated processes if the unit operation is located across the pinch, Figure 10(a). If unit operations are located above

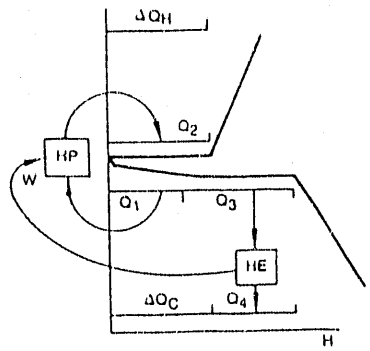

(a) A heat transformer relative to a grand composite curve

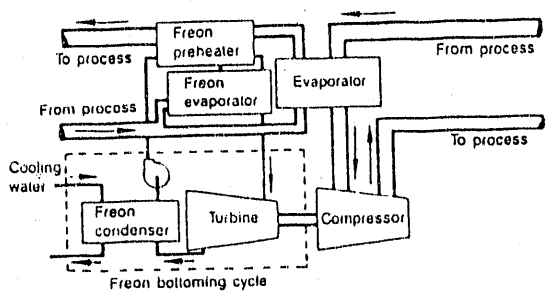

(b) A mechanical heat transformer composed of an inorganic Rankine bottoming cycle heat engine driving a mechanical vapor recompression heat pump

Figure 7. Heat transformers.

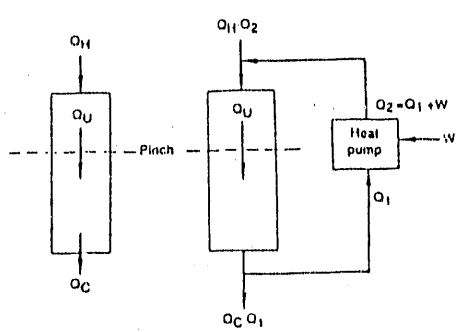

Figure 8. Heat flow in a unit operation with and without a heat pump.

and below the pinch in an integrated process, the heat pump should be pumping heat from the unit operation below the pinch to the unit operation above the pinch, Figure 10(b)

In summary, in the energy cascading hierarchy of many heat integrated processes there exists a process temperature pinch dividing the process into a heat source and a heat sink. Heat pumps can often reduce the heating and cooling utility requirements by picking up heat from the heat source below the pinch and delivering heat to the heat sink above the pinch.

ECONOMICS OF INDUSTRIAL HEAT PUMPS

In order to reduce process heating requirements, heat pumps work against the temperature gradient, and the temperature lift must be as low as possible to minimize

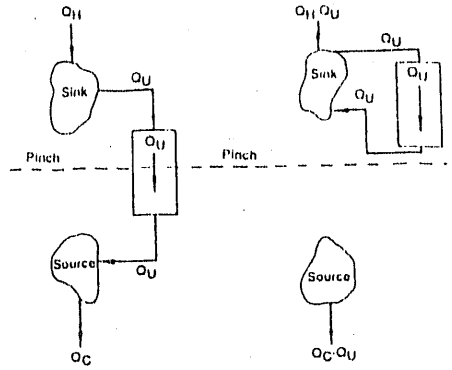

(a) Unit operation across the process pinch

(b) Unit operation above the pinch

Figure 9. Integration of a unit operation within an industrial process.

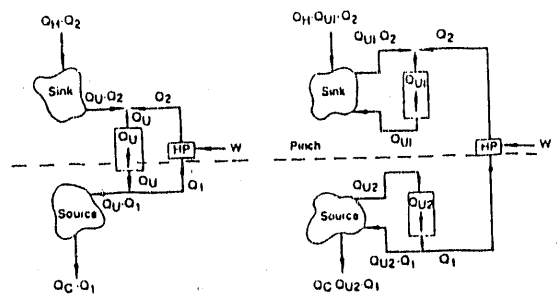

(a) Unit operation across the pinch

(b) Unit operations above and below the pinch

Figure 10. Integrated ur[illegible]ation with a heat pump.

heat pump driving energy. This means that processes that exhibit a long thin "nose" on the GCC curve will be most amenable to energy savings through use of heat pumps. Of course, a substantial heating utility that can be reduced and a substantial heat source from which heat can be pumped are also essential.

The study performed for DOE by TENSA Services, Inc., and referred to in the introduction, evaluated 26 processes using the pinch approach outlined above. Some good and some poor energy saving possibilities through heat pumps were found. Sample GCCs are shown in Figure 11. Note the long thin nose on the benzene, toluene, xylene process shown in Figure 11(a). On this process a potential reductions of 20 percent in heating utility was found with a lift of 25°C, 43 percent with a lift of 80°C and 66 percent with a lift of 100°C. In the urea process, Figure 11(b), a heat pump lift of 30°C has the potential of saving 15 percent and a lift of 65°C may save 50 percent if an economically feasible heat pump could be found for this lift. Additional savings would require a lift of 130°C, which is probably not feasible. The soap process, Figure 11(c), requires a lift of about 135°C to obtain any savings at all, which is probably not feasible. The particular ammonia process evaluated [Figure 11(d)] had no heating utility requirement and heat pumps were, therefore, of no value. Of course other criteria besides the GCC must be used to finally place a heat pump, but it can be seen from Figure 11 that long thin noses on the GCCs are good indicators of heat pumping potential.

As the foregoing discussion states, higher lifts mean greater energy savings. However, because heat pumps move heat against the temperature gradient, higher lifts mean greater driving energy consumption. The limit on lift is based on the economic relationships between (1) the value of the delivered heat, (2) the value of the energy consumed, (3) and the capital cost of the heat pump installation. Indeed, heat can be lifted over very large temperature spans, but the cost is prohibitive. This is shown in Figure 12 where the cost of energy supplied by state of the art industrial heat pumps is plotted against lift to produce the continuously rising solid lines showing total cost of process heat delivered. The total cost is composed of capital cost (the upper shaded

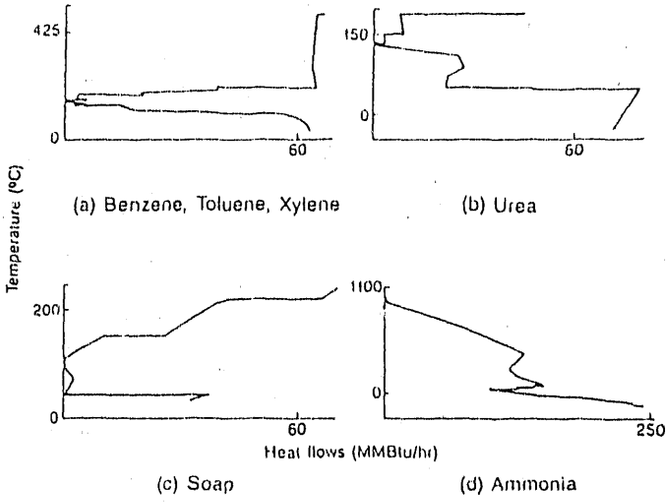

Figure 11. Grand composite curves for four industrial processes.

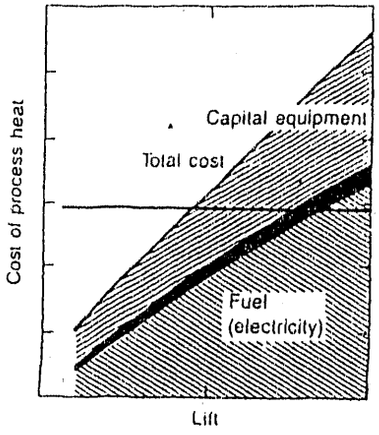

Figure 12. Cost curves for electrically driven open cycle heat pump.

area), maintenance cost (the black area), and operating cost (the lower shaded area). The horizontal line represents the total cost of the energy displaced by introduction of the heat pump including both fuel costs and capital costs of the displaced heat source. Also included should be the costs associated with reduced cooling load, both operating and capital costs. This last item is often overlooked, because without a comprehensive view of the process as provided by the approach described in the previous section, cooling utility capacity displaced by the heat pump is often unknown. The cost of energy displaced (the horizontal line) is shown to be flat which is approximately true for most heating utilities over the temperature range of interest for industrial heat pumps. The intersection of the upper, sloping line and the horizontal cost line defines the economic limit on lift. Above this lift, the cost of pumping heat would exceed the cost of energy displaced by the heat pump.

Projections of operating costs and capital costs, as they increase with lift, were made for a number of heat pump configurations (1,2). The curve in Figure 12 shows the cost of energy delivered by an electrically driven, open, reverse Rankine cycle (MVR).

Plots of the type shown in Figure 13 indicate that the cost of heat delivered by heat pumps increases as the temperature over which the heat is lifted increases. At very low lifts, COPs are high, and the cost of heat delivered by heat pumps is very economical. As lift increases, more energy is required to boost the heat to the higher delivery temperatures resulting in higher operating cost. Capital cost of the heat pump also increases because larger and more expensive components such as improved compressors are required as lift increases. With still higher lifts, staging is required, which increases capital cost substantially. The DOE sponsored studies have shown few heat pump applications with lifts greater than 30°C that with today's energy prices can be economically justified by energy savings alone.

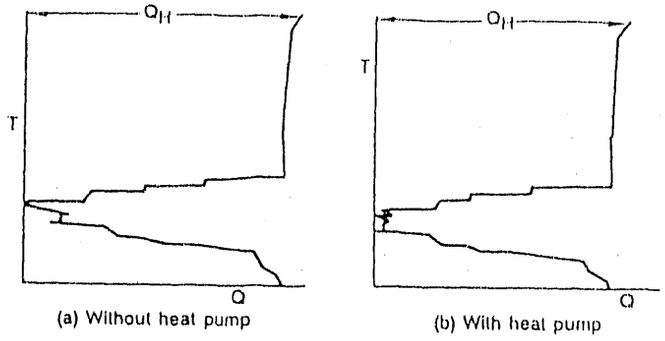

Figure 13. Effect of one heat on a BTX process.

Since limitations on lift are primarily economic, lift capability can be increased by either lowering driving energy cost through performance improvement or by lowering capital cost. Because increasing lift increases the amount of energy that can be saved, it follows that decreasing capital cost increases energy saving potential. This escapes many people because they think of improved lift and energy saving capability only in terms of improved heat pump performance.

THREE EXAMPLES

To illustrate some of the points presented in this paper, three examples will be given. Data for these examples came from the study conducted by TENSA Services (3). The original process data represent actual plant data and have not been altered. In each case the process was optimized with heat exchange networking before heat pumps were placed into the system.

Benzene - Toluene - Xylene (BTX)

The BTX process consists of several distillation columns integrated to separate a mixture of benzene, toluene, and xylene. Preliminary study showed considerable scope for energy reduction by additional heat exchange. This resulted in the grand composite curve shown in Figure 13(a). The nose in this case shows some potential for heat pumping, so three cases were studied: (1) electric closed cycle, (2) electric semi-open cycle, and (3) heat transformer closed cycle. In each case, the heat pump was placed to receive heat from the overhead of one column and to supply heat to the feed of a second column. This illustrates the point of heat pumping between two unit operations on opposite sides of the pinch. The effect of all three heat pump systems is generally the same on the grand composite curve and is shown in Figure 13(b). Each results in a reduction in the hot utility of approximately 20 percent.

The electric closed cycle, basically a compressor and two heat exchangers, has a payback of 2.5 years. With one less heat exchanger and a slightly smaller compressor, the semi-open system has a payback of only 0.7 years. The heat transformer has a payback of 1.5 years. The heat transformer used in this case was a state-of-the-art lithium bromide-water, reverse absorption system [Figure 3(c)] that essentially uses only heat exchangers and no compressors. Comparing the heat transformer with the electrically driven semi-open system demonstrates the influence of the process stream. With organics, heat exchangers tend to be larger, and compressors tend to be smaller. Therefore, cost for heat transfer surface begins to dominate compared with the compressor cost. This will favor systems that rely less on heat transfer surface. An open cycle could be better than a semi-open cycle under such conditions, but is not appropriate for the BTX separation process because remixing the streams would defeat the purpose of the process. A second heat pump was also tried between two other columns in the process but was economically unattractive because the 35°C lift was too great.

hydr
carb

Gelatin Processing

The process for evaporation and drying of gelatin consists of a double effect evaporator followed by a third evaporator and a drying tunnel. As it exists, the process already had a heat pump (a steam ejector) on the first effect overhead. The analysis of the process showed that the heat pump was located entirely above the pinch. The process was modified to raise the pressure in the evaporation train thereby raising the process pinch temperature to a level at which the heat pump was operating across the pinch. This, plus improved process heat integration reduced the hot utility by 40 percent. This modified process is shown on a grand composite curve in Figure 14(a). There was still potential for additional heat integration and heat pumping, which together resulted in an additional 40 percent energy savings as shown in Figure 14(b). Payback for an electric, closed cycle system is 1.9 years, while for an electric semi-open system payback is 1.5 years. A heat transformer was not applicable in this case due to the low process pinch temperature.

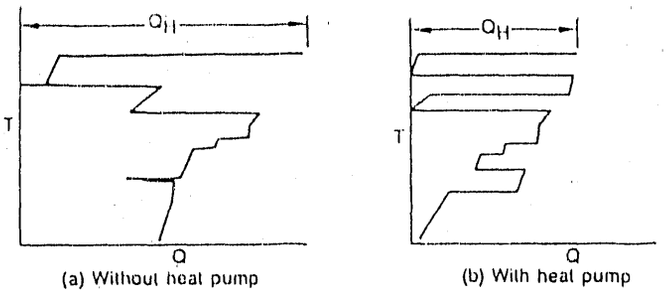

Figure 14. Effect of one heat pump on a gelatin evaporation process.

Sugar Refining

The last example, a sugar refinery, is a case where more than one heat pump can be added. The base case grand composite curve is shown in Figure 15(a). The process is essentially a five-effect evaporator and a vacuum pan and is currently highly energy integrated. In such a system, there is very little scope for additional heat exchange. However, the GCC shows great potential for heat pumps, with several very narrow noses resulting from the five evaporator effects. A first heat pump can be placed around just the upper or pinch nose. The limit for this heat pump is reached when the next lower nose just becomes pinched. This is shown in Figure 15(b). This heat pump required an 11°C lift and shows energy savings of 39 percent with a payback of 0.7 years for a semi-open cycle. At this point, there is still potential for heat pumping around the upper three noses. In this case, the temperature lift needed to span all three noses is small enough (30°C) that a single stage heat pump can be effective. With this second heat pump, an additional 40 percent of energy can be saved at a payback of 1.8 years [Figure 15(c)]. The combined energy savings for both these heat pumps is 64 percent with a payback of 1.0 year.

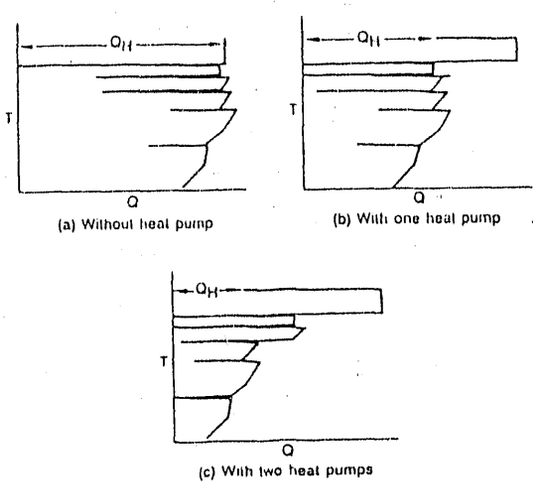

Figure 15. Effect of one and two heat pumps on a sugar refining process.

CONCLUSIONS

The most important conclusion to be drawn from this work is that there can be a place for industrial heat pumps in the process industries, even in processes that are highly energy integrated. However, to be most effective, heat pumps should be considered in a total process analysis.

The ongoing DOE projects will result in several heat pump installations and should provide further insight into the further application of industrial heat pumps.

REFERENCES

1. Bliem, C. J., et al., "A Comparative Economic Evaluation of Industrial Heat Pumps," NTIS[1] EG&G #2408, April 1986.
2. Bliem, C. J., "A Comparative Economic Evaluation of Heat Pumps – Part II," NTIS,[1] EG&G 2539, June 1988.
3. TENSA Services, Inc., "Optimal Heat Pump Placement in Industrial Processes," NTIS,[1] DOE/ID/12583-1 and 12583-2, May 1987.
4. Kirol, L. D., and C. J. Bliem, "Heat of Reaction Chemical Heat Pumps," NTIS[1], EG&G-EP-7791, April 1988.
5. Chen, F. C., and Hsu, C.T. "Performance of Ejector Heat Pumps," *Energy Research*, 11, 1987, pp. 289-300.
6. Okamoto, Y., "Utilization of Absorption Heat Pumps in Japan," IEA[2] *Heat Pump News Letter*, Vol. 2, Nos. 1-2, May 1984.
7. Mechanical Technology, Inc./USDOE, "Development and Test of a High COP Rankine Heat Pump for Generation of Process Steam," NTIS[1] DOE/CS/40074, Oct. 1984.
8. Gas Research Institute/Thermo Electron, "Open Cycle Vapor Compression Heat Pump," Annual Report for 1980, NTIS[1] Number PB82-110503, GRI-80/0064.
9. IEA[2] *Heat Pump News Letter* (the entire issue), Vol. 6, No. 4, Dec. 1988.
10. Rockenfeller, Uwe, Kirol, L. D., "Solid Vapor Complex Compound Chemical Heat Pumps for Industrial Applications," NTIS[1], EG&G EP-8340, October 1988.
11. Linnhoff, B. et al., "General Process Improvements Through Pinch Technology," *Chemical Engineering Progress*, Vol. 84, No. 6, June 1988
12. Hohmann, E. C., "Optimum Networks for Heat Exchange," Ph.D. Thesis, U. of So. California, Los Angelos, CA, 1971.
13. Linnhoff, B. and J. R. Flower, "Synthesis of Heat Exchanger Networks: I Systematic Generation of Energy Optimal Networks, II Evolutionary Generation of Networks with Various Criteria of Optimality," *AIChEJ* Vol. 24, No. 4, 1978.
14. Boland, D. and B. Linnhoff, "The Preliminary Design of Networks for Heat Exchange by Systematic Methods," *The Chem. Eng.*, April 1979, p. 222.
15. Linnhoff, B. and B. W. Townsend, "Designing Total Energy Systems," *Chemical Engineering Progress*, July 1982.
16. Townsend, D. W. and B. Linnhoff, "Heat and Power Networks in Process Design," Parts I and II, AIChEJ, Vol. 29, No. 5, 1983.
17. Union Carbide Corp., "Heat Pumps in Evaporation Processes," EPRI[3] EM-4693, Project 2220-2 Final Report, November 1986
18. Linnhoff March, Inc., "Industrial Heat Pump Manual," EPRI[3] EM-6057, Project 2783-11, Final Report, October 1988.
19. "Drying with Electric Heat Pumps," EPRI Tech Application, The EPRI Process Industry Coordination Office, Suite 13-1-011, 505 King Ave., Columbus, OH, 43201-2693, Vol. 1, No. 1, 1988.

---

[1]NTIS National Technical Information Service U.S. Dept. of Commerce, Springfield, VA 22161.

[2]IEA International Energy Agency Heat Pump Center c/o Fachinformations Zentrum Energie, Physik, Mathematik, GmbH,D-7514 Eggenstein Leopoldshafen 2, Federal Republic of Germany.

[3]EPRI Electric Power Research Institute, 3412 Hillview Ave, Palo Alto, CA., 94304.

DISCLAIMER

This report was prepared as an account of work sponsored by an agency of the United States Government. Neither the United States Government nor any agency thereof, nor any of their employees, makes any warranty, express or implied, or assumes any legal liability or responsibility for the accuracy, completeness, or usefulness of any information, apparatus, product, or process disclosed, or represents that its use would not infringe privately owned rights. Reference herein to any specific commercial product, process, or service by trade name, trademark, manufacturer, or otherwise does not necessarily constitute or imply its endorsement, recommendation, or favoring by the United States Government or any agency thereof. The views and opinions of authors expressed herein do not necessarily state or reflect those of the United States Government or any agency thereof.

END

DATE FILMED

11 / 27 / 90