CONF-8406198--20

ANL-HEP-CP-84-67

The submitted manuscript has been authored by a contractor of the U. S. Government under contract No. W-31-109-ENG-38. Accordingly, the U. S. Government retains a nonexclusive, royalty-free license to publish or reproduce the published form of this contribution, or allow others to do so, for U. S. Government purposes.

TRIGGERING AT A HIGH LUMINOSITY HADRON COLLIDER

ANL-HEP-CP--84--67

DE85 003041

L. E. Price and R. G. Wagner
Argonne National Laboratory, Argonne, IL 60439

M. A. Abolins
Michigan State University, E. Lansing, MI 48824

Introduction

The extreme interaction rate occurring at the SSC as described in the Reference Design Report[1] poses the principal new challenge for the triggering system compared with detectors at previous accelerators. At SSC we must plan for about 10^8 interactions per second. If bunch crossings occur each 33 ns, there will be an average of 3 interactions in each bunch crossing. Potential problems for triggering are presented both by the high total rate and by the multiple interactions per bunch crossing, so that triggering events must be selected in the presence of other interactions independent of the inherent speed of either detector elements or triggering electronics.

Previous studies[2,3] have shown by means of ISAJET simulations that a small number of overlapping events do not significantly affect a trigger which is based primarily on calorimetry. We have not separately investigated this point, but have used ISAJET to simulate triggering with the level of overlap mentioned above.

Three principal topics are considered in this report:

(1) What practical selections must be made in a first-level trigger to reduce the rate by a factor of 1000? This factor is chosen to bring the remaining rate to about the 10^5 Hz for which the FNAL Tevatron 1 detectors are planning their triggers,[4,5] so that the necessary strategy is well understood.

(2) What electronics can be expected to implement this first-level trigger?

(3) What are the ultimate trigger selections that must be used to select the approximately 1 Hz that can practically be recorded for detailed analysis?

1. First Level Trigger Thresholds

The 33 ns between bunch crossings and, thus, first-level trigger decisions, permits only the simplest quantities characterizing an event to be formed. Since the processes of interest have large E_T jets and/or large missing p_T and these quantities can be quickly formed in the hardware, we chose to base the first-level trigger cuts on them. It should be noted that calorimeter readout times are expected to be at best 100 ns and, therefore, initial trigger decisions will be made using only a fraction of the total charge.

In order to reduce the effect of background particles uniformly distributed in rapidity, only towers having E_T greater than a preset threshold are added to the trigger sums. The following trigger sums were defined:

$$E_T \equiv \sum_{\substack{\text{tower with} \\ E_{Ti} > \text{cut}}} E_i \sin\theta$$

$$P_{Tx} \equiv \sum_{\substack{\text{tower with} \\ E_{Ti} > \text{cut}}} E_i \sin\theta \cos\phi$$

$$P_{Ty} \equiv \sum_{\substack{\text{tower with} \\ E_{Ti} > \text{cut}}} E_i \sin\theta \sin\phi$$

$$N_j \equiv \text{Number towers with } E_{Ti} > \text{cut}$$

The Level 1 trigger then demands one of the sums to exceed a cut value or more than a set number of jets as defined above.

The relevant question about this scheme is whether one can pick a cut level that reduces the "minimum bias" background by a factor of ~ 1000 in the event rate, or equivalently about 300 in the bunch crossing rate, while minimally eliminating "new" physics events. To answer this, a Monte Carlo study was undertaken using the ISAJET event generator.[6] Since at $\sqrt{s} = 40$ TeV, most interactions produce jet-like topologies,[7] only the TWOJET option of ISAJET was used, with the p_T range adjusted to give the correct cross section. It was found that the two-jet events generated with $p_T = 4$-100 GeV/c gave a 138 mb cross section. This range was used to generate the "minimum bias" events.

Table I

Probability of one beam crossing producing an average of three interactions, satisfying each of the three first-level trigger conditions.

Trigger Requirement	Probability
$E_T > 75$ GeV	0.0017 ± 0.0005
$P_T^{miss} > 25$ GeV	0.0012 ± 0.0005
> 2 supertowers with $E_T > 25$ GeV	0.0013 ± 0.0004

An idealized detector was defined by dividing the rapidity region $-5 < \eta < 5$ into cells of $\Delta\eta = 0.25$ and $\Delta\phi = 15^\circ$. An SSC calorimeter will be more finely segmented than this, and we are thus summing several real calorimeter towers to form a trigger supertower. For each generated event, the energy of each showering particle was added to the appropriate supertower. To include effects from multiple interactions in a beam crossing, separate Monte Carlo runs were made in which energy from n events, where n = 1-6, was summed. A finite energy resolution of $\sigma_E = 35\%/\sqrt{E\,(\text{GeV})}$ and a constant electronics noise of $\sigma_E = 1.5$ GeV/supertower (see Section 2) was also added to the energy deposited in a supertower. The quantities E_T, p_{Tx}, and p_{Ty} were calculated for each supertower. A threshold cut of $E_T = 10$ GeV was then required for a supertower to be included in the trigger sums. The numbers of supertowers with E_T greater than thresholds of 2, 5, 10, 15, 20, 25, 30, 40, 50 GeV were also found. For each trigger candidate, the quantities E_T, maximum (P_{Tx}, P_{Ty}) and numbers of supertowers with $E_T > 2, \ldots 50$ GeV were histogrammed. Note that the max (P_{Tx}, P_{Ty}) constitutes a missing momentum requirement. The resulting histograms were summed over the different event overlap numbers n, using appropriate Poisson probabilities for $\langle n \rangle = 3$ to find the fraction of trigger candidates satisfying a given cut on missing energy, or number of jets. The resulting distribution

MASTER

Contributed paper to the 1984 Summer Study on the Design and Utilization of the Superconducting Super Collider, Snowmass, CO (June 23 - July 13, 1984).

DISTRIBUTION OF THIS DOCUMENT IS UNLIMITED

for E_T is shown in Fig. 1 and that for max (P_{Tx}, P_{Ty}) in Fig. 2. Table I lists the trigger requirements chosen and the probability that the trigger requirement will be satisfied by a given bunch crossing.

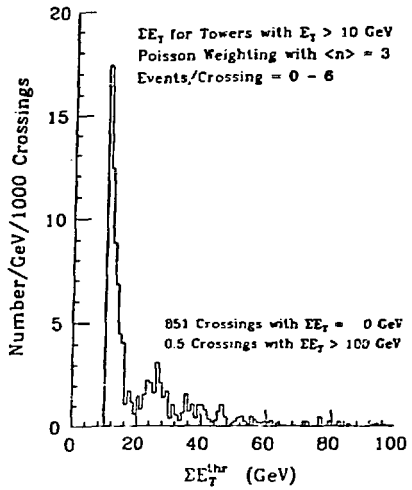

Fig. 1. Histogram of E_T summed over all trigger towers having individually more than 10 GeV of E_T, normalized to 1000 bunch crossings.

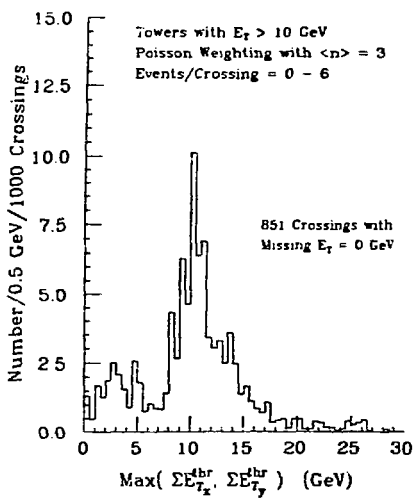

Fig. 2. Histogram of max (P_{Tx}, P_{Ty}) per crossing summed over all trigger towers having individually more than 10 GeV of E_T, normalized to 1000 bunch crossings.

The E_T and the number of supertowers with E_T > cut triggers are alternative possibilities for a Level 1 jet trigger. In the Monte Carlo study, they were found to generally select the same trigger candidates (70% of the candidates satisfying the 2 supertowers with E_T > 25 GeV also satisfied E_T > 75 GeV, while 55% of the E_T triggers also satisfied the two supertower trigger).

Thus an OR of the three trigger conditions in Table I eliminates QCD-type minimum bias events by a factor of about 1000.

2. Electronics Considerations for SSC Triggering

Since liquid argon calorimetry has emerged as the technology of choice for the SSC environment, we consider the limitations imposed by the electronics and the charge collection process. We will make the following assumptions:

1. The detector is assumed to consist of 1.5 mm uranium plates separated by 1 mm gaps of liquid argon with 3% methane added. This will impose stringent demands on the mechanical construction but results in a charge collection time which may be as small as 25 ns.[8]

2. The individual detector elements are ganged in small units to limit the input capacitance to the preamplifier.

3. The input impedance will be kept small (20 ohms) through suitable choice of amplifier.

4. The gain-bandwith product of the amplifier is assumed to be large, about 1 GHz.

With these assumptions we analyze in detail the performance of the circuit in Fig. 3. Following the treatment of Franzini[4], we assume an idealized triangular shape for the input current. R_a and C_a are in the input impedance of the amplifier and the capacitance of the detector, respectively, such that R_aC_a is 15 ns. R and C are the feedback elements for the amplifier and R_b and C_b differentiate the output signal with a time constant R_bC_c = 10 ns. In Fig. 4 are shown the amplifier voltages for the signal and the trigger, respectively.

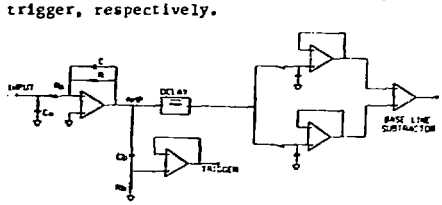

Fig. 3. Analog circuitry for calorimeter signals used in proposed first-level trigger.

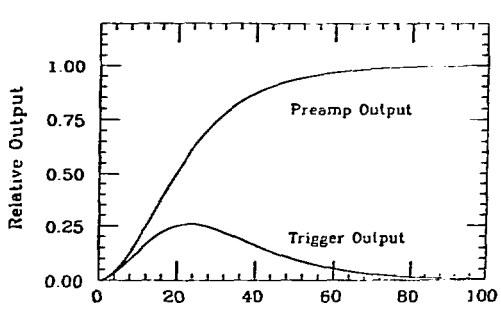

Fig. 4. Shapes of calorimeter signals used for readout and for triggering.

The high bandwidth requirement of our trigger (50 MHz) results in substantial amounts of amplifier noise being added to the signal. We assume a JFET front end with a gain-bandwidth product of 10^9 or better and an input noise voltage density of 10^{-9}V/Hz. If we limit the single channel capacitance to 2.5 nf, then the noise in equivalent number of electrons approaches 10^5 per channel. This number is very nearly equal to the number of electrons collected after the passage of a minimum-ionizing particle through the same cell. This unfavorable signal-to-noise ratio of one to one is, of course, substantially improved in the final amplified signal where the bandwith is restricted by a factor of ten or more. When the signals from these small calorimeter towers are added into a trigger supertower, this noise level results in an equivalent noise energy of 1-1.5 GeV.

A schematic for a possible trigger scheme incorporating the elements discussed above is indicated in Fig. 5. Following the lead of Shochet[9], we consider a pipe-lined scheme in which the trigger consisting of a total E_T trigger, missing P_X or P_Y triggers, and an electromagnetic shower trigger, is made in about 200 ns. The base-line subtractor is activated if a trigger is successful and the data are recorded. An important feature of this trigger is the counter which signifies whether a given element of the calorimeter has crossed threshold. A given tower is added to the energy sum only if its energy is over the threshold at the same time as that of the element that caused the trigger.

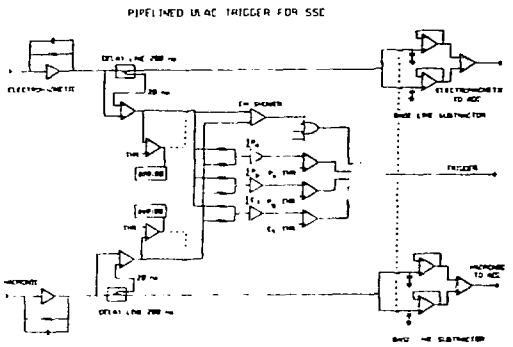

Fig. 5. Schematic of deadtimeless first-level trigger.

3. Final Trigger Requirements

As a final topic in this initial consideration of triggering at the SSC, we ask whether the physics of interest can be preserved with a trigger that allows a final rate of only 1 or 2 Hz? A detailed consideration of the trigger conditions at each level is beyond the scope of this report, but we cao estimate the final requirements necessary to achieve acceptable trigger rates in several topologies.

We start by identifying several representative physics processes to be searched for or triggered on at the SSC. These are shown in Table II, along with a description of the trigger topology. The description of the topology identifies the number of jets and leptons separately, and indicates whether missing p_T will be part of the signature for the process.

We estimate a rate for background triggers from QCD jets by starting with Figure 6, derived from EHLQ[10] and our own ISAJET calculations, which plots the integrated cross-section above a given E_T vs. E_T. For two-jet events, this graph can be read directly to give the cross-section, and hence the rate, above a given E_T. We adopt the criterion that each partial trigger should give a rate less that 0.2 Hz at a luminosity of 10^{33}, in order that the total trigger rate remains under 2 Hz. The resulting threshold on E_T is then shown by the solid line in Figure 6, which gives 3.2 TeV.

Table II

Representative Physics Processes and Typical Trigger Topologies

Process		Trigger Topology
Higgs	$H \to Z^0Z^0$ W^+W^-	4 leptons 1 lepton + p_T^{miss} + 2 jets or 2 leptons + p_T miss
Techni-rho	$\rho_T \to W^+W^-$ $W\ Z$	1 lepton + p_T^{miss} + 2 jets
Technicolor Scalar	$P' \to gg, tt,$ $bb, \ldots$	2 jets
Gluino (Pairs)	$\tilde{g} \to g\tilde{g}\gamma$	p_T^{miss} + 2 jets (twice)
Fourth Generation (Pairs)	$b' \to Wt$	1 lepton + p_T^{miss} + 4 jets
Above	$g\bar{g}\ell^+\ell^-$	2 jets + 2 leptons
Compositeness	$gg\bar{g}\bar{g}$	4 jets
Scale	$\ell^+\ell^-\ell^+\ell^-$	4 leptons

Three-jet events are calculated by EHLQ to occur at a rate lower than two-jet events by about a factor of 30. Thus again with reference to Fig. 6, we can relax the E_T threshold by an amount corresponding to an increase in cross-section of a factor of 30. The 0.2 Hz limit then requires a threshold of $E_T > 1.8$ TeV for processes where the signature is three or more jets. Although EHLQ were not able to calculate the rate for 4-jet processes, we make the naive assumption that there will be another factor of 30 reduction in the cross-section for 4-jets compared with 3-jets. Employing Fig. 6 in the same manner then shows that for 4-jet topologies, it is necessary to require $E_T > 1.0$ TeV.

Trigger topologies involving n jets and lepton(s) and/or missing p_T are handled in a similar manner. Approximate rate reduction factors are determined for each additional requirement, and these are than used with Fig. 6 to calculate the necessary E_T threshold which must be imposed to bring the total rate to less than 0.2 Hz for the given topology. Although a realistic trigger would have the ability to tune the cut on E_T for each jet or lepton and also the cut on missing p_T for each toplogy, we make the simplifying condition that including a lepton in the trigger will always include an E_T cut of 25 GeV, and that a missing p_T cut will always be made at 35 GeV/c. We can than calculate the rate reduction for inclusion of a lepton by assuming that the lepton signal will be provided by an isolated hadron that gives a false lepton signal. Thus the factor to apply to the rate is

Table III

E_T Threshold vs. Topology

Final E_T trigger requirement vs. event topology. Topologies are characterized by the number of jets required (column in table) and additional requirements on leptons or missing p_T (row in Table). The numerical entry in the table gives the final cut in TeV required to restrict the background rate to < 0.2 Hz for each topology, when the machine luminosity is 10^{33} cm^{-2} sec^{-1}. If the final E_T cut is below the first-level trigger cut on E_T, this is indicated by *. Where applicable, the table entry also includes the relevant physics process from Table II, so that its mass scale of interest can be compared with the required E_T cut.

Other Conditions	Number of Jets: 0	2	3	4
		$p' \to 2$ jets 3.2	1.8	Compositeness $\to gggg$ 1.0
p_T^{miss} > 35 GeV		$\tilde{g} \to g\tilde{g}\gamma$ 1.0	0.3	Pair of $\tilde{g} \to g\tilde{g}\gamma$ 0.1
1 lepton E_T > 25 GeV		0.35	0.2	*
$1\ell + p_T^{miss}$		$H \to W^+W^-$ $p_T \to W^+W^-$ *	*	Pair of $b' \to Wt$ *
2ℓ		Compositeness $\to q\bar{q}\ell^+\ell^-$ *	*	*
$2\ell^+ p_T^{miss}$ *	$H \to W^+W^-$ *	*	*	*
4ℓ	$H \to Z^0Z^0$ Compositeness $\to \ell^+\ell^-\ell^+\ell^-$ *	*	*	*

$$F_1 = \text{Prob (Isolated hadron > 25 GeV)} \times \text{Prob (Hadron gives lepton signal)} = (0.7 \times 10^{-2}) \times (10^{-2}) = 0.7 \times 10^{-4}.$$

i.e., each lepton requirement will be taken to reduce the rate by a factor of 0.7×10^{-4}.

The rate reduction factor from requiring a missing p_T > 35 GeV/c is calculated by assuming that large missing p_T's come from neutrinos, and using the approximate neutrino spectrum estimated by S. Protopopescu and F. Paige.[11] The resulting factor is $F_m = 10^{-3}$.

These rate factors have been used to estimate the final cut in E_T that must be made on each topology so that the partial trigger rate will be less than 0.2 Hz. These E_T levels are tabulated in Table III, where the topology is characterized by the number of jets, shown increasing with successive columns, and lepton or missing p_T requirements, shown in separate rows. The physics processes considered are also entered in the appropriate box in the table along with the E_T cut, so that the E_T cut level can be compared with the physics energy scale for the process. The result is that processes whose signature is only the number of

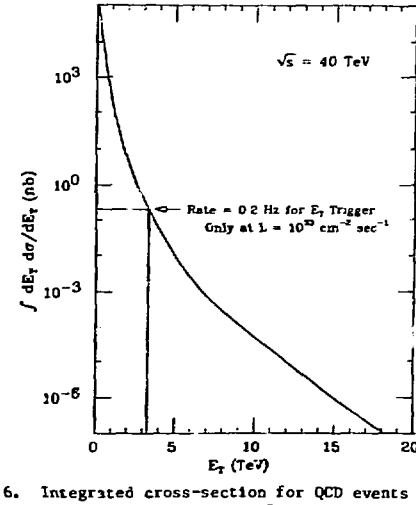

Fig. 6. Integrated cross-section for QCD events above a given E_T, plotted vs. E_T.

jets require E_T thresholds of 1 TeV or more, so that the mass range available for discovery is rather limited. Topologies involving multiple lepton and missing p_T conditions, such as Higgs decay to gauge bosons or fourth-generation b quarks decaying to W's and t's, allow triggering with modest E_T levels, or even no additional E_T cut beyond what is necessary in the first or second level of trigger.

References

1. Report of the Reference Designs Study Group on the Superconducting Super Collider (May 8, 1984).

2. H. A. Gordon et al., Proc. 1982 DPF Summer Study, p. 357.

3. H. A. Gordon et al., Proceedings of the 1983 DPF Workshop on Collider Detectors: Present Capabilities and Future Possibilities, p. 175, February 28 - March 4, 1983.

4. P. Franzini, "Electronics for the Liquid Argon Calorimeter", DO Note 77.
   P. Franzini, "Shape of Signal for Trigger", DO Memo, July 5, 1984.

5. Design Report for the Fermilab Collider Detector Facility, August (1981).

6. F. Paige and S. Protopopescu, Brookhaven Report BNL-2977 (1980), ISAJET Version 4.03.

7. F. Paige, private communication.

8. C. Fabjan et al., SPS proposal P141.

9. M. Shochet, Triggers Group Summary Report, Proceedings of the 1983 DPF Workshop on Collider Detectors: Present Capabilities and Future Possibilities, p. 58, February 28 - March 4, 1983.

10. "Supercollider Physics," E. Eichten et al., FERMILAB-Pub-84/17-T (1984).

11. The neutrino spectrum is reproduced in the report of the Calorimeter Group in these proceedings.

DISCLAIMER

This report was prepared as an account of work sponsored by an agency of the United States Government. Neither the United States Government nor any agency thereof, nor any of their employees, makes any warranty, express or implied, or assumes any legal liability or responsibility for the accuracy, completeness, or usefulness of any information, apparatus, product, or process disclosed, or represents that its use would not infringe privately owned rights. Reference herein to any specific commercial product, process, or service by trade name, trademark, manufacturer, or otherwise does not necessarily constitute or imply its endorsement, recommendation, or favoring by the United States Government or any agency thereof. The views and opinions of authors expressed herein do not necessarily state or reflect those of the United States Government or any agency thereof.

NOTICE

PORTIONS OF THIS REPORT ARE ILLEGIBLE.

It has been reproduced from the best available copy to permit the broadest possible availability.