DOE/MC/23077--2922

DE91 002025

Evaluation of Biological Conversion of Coal-Derived Synthesis Gas

Topical Report

R.K. Fu
G. Mazzella

September 1990

Work Performed Under Contract No.: DE-AC21-86MC23077

For
U.S. Department of Energy
Office of Fossil Energy
Morgantown Energy Technology Center
Morgantown, West Virginia

By
Foster Wheeler USA Corporation
Clinton, New Jersey

MASTER

DISTRIBUTION OF THIS DOCUMENT IS UNLIMITED

DISCLAIMER

This report was prepared as an account of work sponsored by an agency of the United States Government. Neither the United States Government nor any agency thereof, nor any of their employees makes any warranty, express of implied, or assumes any legal liability or responsibility for the accuracy, completeness or usefulness of any information, apparatus, product, or process disclosed, or represents that its use would not infringe privately owned rights. Reference herein to any specific commercial product, process, or service by trade name, trademark, manufacturer, or otherwise, does not necessarily constitute or imply its endorsement, recommendation, or favoring by the United States Government or any agency thereof. The views and opinions of authors expressed herein do not necessarily state or reflect those of the United States Government or any agency thereof.

This report has been reproduced directly from the best available copy.

Available to DOE and DOE contractors from the Office of Scientific and Technical Information, P.O. Box 62, Oak Ridge, TN 37831; prices available from (615)576-8401, FTS 626-8401.

Available to the public from the National Technical Information Service, U.S. Department of Commerce, 5285 Port Royal Rd., Springfield, VA 22161.

EVALUATION OF BIOLOGICAL CONVERSION OF COAL-DERIVED SYNTHESIS GAS

TABLE OF CONTENTS

		PAGE NO.
1.0	SUMMARY	1
2.0	SCOPE OF STUDY	5
3.0	BASIS FOR CONCEPTUAL DESIGNS	8
	3.1 CONVENTIONAL COAL-BASED SNG PLANT	8
	3.2 SYNGAS BIOCONVERSION	8
4.0	CONVENTIONAL COAL-BASED SNG PLANT	14
	4.1 PLANT DESCRIPTION	14
	4.2 MASS AND ENERGY BALANCES	20
	4.3 OPERATING SUMMARY	20
	4.4 ESTIMATED CAPITAL COSTS	22
5.0	BIOCONVERSION SYSTEM DESIGN	26
	5.1 SYSTEM DESCRIPTION	26
	5.2 HEAT AND MATERIAL BALANCES	32
	5.3 OPERATING REQUIREMENTS	32
	5.4 ESTIMATED CAPITAL COSTS	40
6.0	INTEGRATED BIOCONVERSION SNG PLANT	41
	6.1 PLANT DESCRIPTION	41
	6.2 MASS AND ENERGY BALANCES	45
	6.3 OPERATING SUMMARY	45
	6.4 ESTIMATED CAPITAL COSTS	47
7.0	ECONOMIC EVALUATION	54
	7.1 ECONOMIC GUIDELINES	54
	7.2 ANNUAL OPERATING COSTS	55
	7.3 LEVELIZED SNG COST	55
	7.4 EFFECT OF PURCHASED ACETIC ACID	55
	7.5 EFFECT OF SNG PRODUCT SPECIFICATIONS	58

4190Y

TABLE OF CONTENTS (Cont'd)

		PAGE NO.
8.0	CONCLUSIONS AND RECOMMENDATIONS	60
	8.1 BIOCONVERSION FOR SNG PRODUCTION	60
	8.2 BIOCONVERSION FOR HYDROGEN PRODUCTION	62
9.0	LITERATURE REFERENCES	63

1.0 SUMMARY

Foster Wheeler USA Corporation conducted an evaluation study on the biological conversion of synthesis gas to methane which is under development at the University of Arkansas. A conceptual design of an integrated coal-based SNG plant, employing the bioconversion process route, was developed together with the corresponding capital and operating costs. The economics were compared to those for a coal-based SNG plant design using the conventional catalytic route for shift and methanation.

The design basis for the bioconversion unit was established in conjunction with the University of Arkansas. A two-stage bioconversion route to methane was selected using a tri-culture consisting of P. productus, R. rubrum, and M. formicicum. Foster Wheeler developed the conceptual process design for the overall bioconversion unit which comprised the following three subsystems:

- Acetate Production
- Shift/Methanation
- Medium Preparation

The bioconversion unit design was incorporated into an integrated SNG plant design, having a nominal capacity of 125 billion Btu/day of SNG produced from Pittsburgh No. 8 bituminous coal. The performance and costs for the conventional coal-based SNG plant were extracted from a previous GRI study (2). Overall plant performances for the conventional catalytic route and the bioconversion processing scheme are compared in Table 1.1. Of particular significance are the higher coal and water usages for the bioconversion route. These are directly related to the lack of steam generation via waste heat recovery and the rejection of reaction heat to cooling water in the bioconversion process which operates at about 100°F. Consequently, the annual operating costs for the SNG plant based on bioconversion of syngas are about 8% higher than for the conventional catalytic design, as shown below:

	Conventional Design	Bioconversion Design
Coal Cost, $MM	99.4	110.6
Variable O&M Cost, $MM	64.3	64.6
By-Product Credit, $MM	(7.4)	(6.6)
Net Annual Cost, MM$	156.3	168.6

Based on the conceptual plant design, an estimate of the total plant investment was developed for the integrated bioconversion SNG plant. This estimate reflects mid-1985 costs for a Western Pennsylvania site.

TABLE 1.1

INTEGRATED SNG PLANT PERFORMANCE

	Conventional Route	Bioconversion Route
Coal Feed, TPD		
Gasification	7,780	7,780
Steam Generation	0	875
	7,780	8,655
Limestone, TPD	0	207
Raw Water, GPM	3,054	5,175
Catalyst and Chemicals, $/Day	14,250	2,149
SNG Product, MMSCFD	131.6	129.3
HHV, Btu/SCF	950	950
By-Products:		
Sulfur, TPD	179	165
Ammonia, TPD	30	22
Solids to Disposal, TPD	1,409	1,725
Cold Gas Efficiency, %	68.0	60.1

In addition to the facilities construction costs, the total plant investment includes allowances for project contingency, initial catalyst and chemical charges, process royalties, and start-up costs. As summarized in Table 1.2, the total plant investment for the bioconversion design is about 4% higher than for the conventional catalytic route. Major cost factors which account for this difference are the cost for the bioconversion unit in the processing facilities and the need for auxiliary steam generation in the support systems.

The higher operating and capital costs for the bioconversion plant design result in a levelized cost of SNG of $7.1/MMBtu compared to $6.6/MMBtu for the conventional catalytic route. Under these conditions, bioconversion of synthesis gas for SNG production is clearly not competitive with the conventional catalytic process for shift and methanation.

Further development of the bioconversion process could possibly improve the relative economics for SNG production. Areas recommended for future R&D effort include the following:

- Develop bacterial cultures for simultaneous sulfur removal.
- Develop an improved strain of microorganism for shift conversion which will allow higher cell concentrations and higher operating temperatures.
- Improve the bioreactor design for shift/methanation to allow for more efficient heat removal.

TABLE 1.2

SNG PLANT INVESTMENT SUMMARY

BASIS: MID-1985

	Conventional Route	Bioconversion Route
Process FCI*	353	364.5
Support FCI*	263	286.7
	616	651.2
Project Contingency	92	97.7
Engineering and Design Cost	96	101.1
Total FCI*	804	850.0
Initial Catalyst Inventory	15	1.3
Paid-up Royalty	6	6.0
Start-up Cost	65	65.0
Total Plant Investment, $MM	890	922.3

* Facilities Construction Investment.

2.0 SCOPE OF STUDY

As part of the technical support services provided for the DOE/GRI Joint Coal Gasification Research Program, Foster Wheeler conducted an evaluation study on the biological conversion of coal-derived synthesis gas for SNG production. The objective of this study was to determine the potential technical and economic advantages of the bioconversion technology which is being developed by the University of Arkansas.

A block flow diagram illustrating the conceptual bioconversion route to SNG is shown in Figure 2.1. In this concept, the bioconversion unit essentially replaces the conventional catalytic processing steps for shift conversion and methanation. In conducting the evaluation study, Foster Wheeler developed conceptual designs and costs estimates for integrated coal-to-SNG plants based on the bioconversion route as well as the conventional catalytic processing scheme. Levelized costs for the SNG product were calculated and the relative economics for the bioconversion route were assessed with respect to the process design assumptions used. In addition, technical areas where future research efforts should be directed to realize any potential benefits of the bioconversion technology were identified.

In performing this evaluation, use of design and cost information from previous studies on coal-to-SNG plants was maximized. Accordingly, Foster Wheeler's efforts were primarily concerned with developing the conceptual design and costs for the bioconversion processing units and the associated support systems, such as culture preparation. The design basis and processing scheme for the bioconversion system was established by Foster Wheeler in conjunction with the University of Arkansas.

The following subtasks outline the overall scope of Foster Wheeler's study effort:

1.0 Conventional Plant Design and Cost Estimate

Based on previous design studies, a block flow diagram of the integrated SNG plant will be developed, together with the overall plant operating requirements. Capital costs for the individual process units and support systems will be scaled and updated, as required, from previous work.

2.0 Bioconversion Design Basis

Foster Wheeler will review the available reports on the University of Arkansas' technology for biological conversion of synthesis gas to methane. This information, together with additional discussions with the University of Arkansas, will be used to establish a basis for the conceptual design relative to:

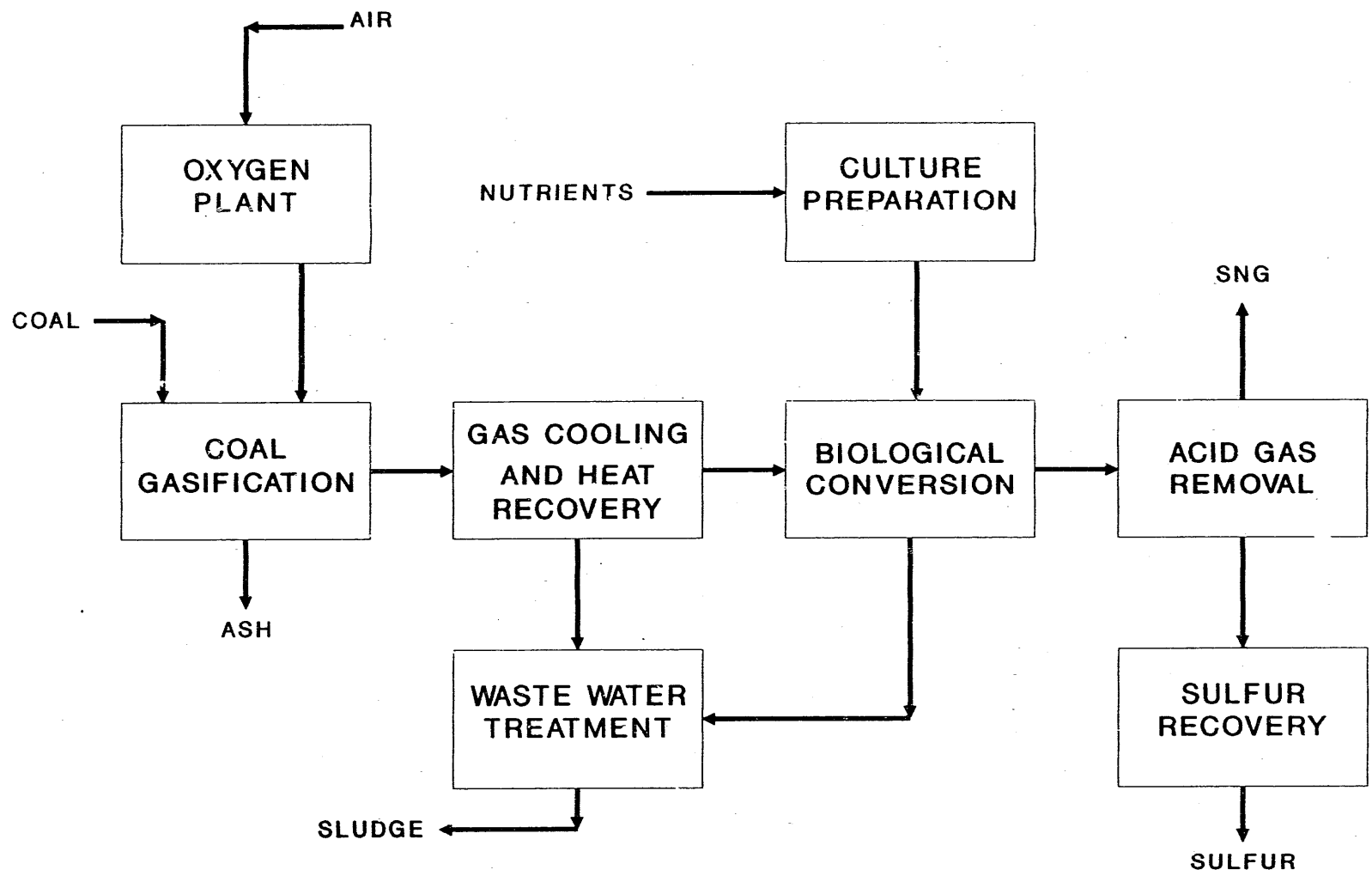

FIGURE 2.1
BIOLOGICAL CONVERSION OF SYNGAS

- Selection of micro-organisms and appropriate operating conditions.

- The processing sequence required for a bioconversion system.

- Reaction rates, yields, and reactor design for commercial application.

3.0 Bioconversion System Design

Conceptual designs for the bioconversion units and support systems will be developed in accordance with the established design basis. These designs will include process flow diagrams, heat and material balances, major equipment sizes, and operating requirements.

4.0 Integrated Plant Design and Cost Estimate

Block flow diagram of the coal-to-SNG plant scheme which incorporates the bioconversion route will be prepared. The bioconversion units will be integrated into the overall plant scheme and the corresponding operating requirements will be summarized. Foster Wheeler will develop capital cost estimates for the bioconversion process units based on major equipment costs. The overall plant cost will be developed from the individual process units costs which will be factored, as necessary, from the conventional plant costs.

5.0 Economic Assessment

Based on the estimated capital costs and operating requirements, the levelized cost for SNG will be calculated for both the conventional coal-to-SNG plant and the bioconversion process route. Sensitivity analyses relative to key design assumptions for the bioconversion process will be made.

6.0 Summary Report

Foster Wheeler will prepare a topical report summarizing the results of the evaluation study. The report will include a discussion of the design assumptions and potential for the bioconversion technology, as well as recommendations for future R & D areas.

3.0 BASIS FOR CONCEPTUAL DESIGNS

3.1 Integrated Coal-Based SNG Plant

The integrated plant has a nominal design capacity of 125 billion BTU per day of SNG product. The plant is self-contained except for coal, raw water, and consumable catalysts and chemicals. Product SNG specifications, as given in Table 3.1, follow GRI's guidelines (1).

The plant is assumed to be located in Western Pennsylvania adjacent to the coal mine from which the plant feed is obtained. Pittsburgh No. 8 bituminous coal is the design feedstock, having characteristics as shown in Table 3.2. Coal crushed to less than six inches is received via conveyor at the plant battery limits on a six days per week and two shift per day basis. Storage and handling facilities are provided for 14 days of live coal storage and 30 days in dead storage. The plant site is assumed to have an adequate water supply so that water cooled exchangers are used for all steam turbine surface condensers and for most cooling services below 140° F.

The conceptual plant designs for SNG production are based on KRW fluidized-bed gasification of coal in an oxygen-blown mode without in-bed sulfur capture. The conventional design case, employing catalytic shift and methanation, was extracted from a previous GRI study (2). Plant equipment is spared as necessary to achieve a 90% service factor and multiple trains are provided for all major processing units.

3.2 Syngas Bioconversion

Biological conversion of coal-derived synthesis gas to methane is based on the process technology being developed at the University of Arkansas. Accordingly, the design basis for the bioconversion unit, as employed in this study, was established in conjunction with the University of Arkansas via Foster Wheeler's review of pertinent project reports (3-5) and subsequent discussions with the research associates at the University.

The design basis which evolved from this effort represented an extrapolation of the University of Arkansas' experimental data towards commercial operating conditions. The block flow diagram in Figure 3.1 illustrates the commercial process concept for the bioconversion unit as established for this study. This system consists of two reaction stages employing a tri-culture of P. productus, R. rubrum, and M. formicicum to convert carbon monoxide and hydrogen into methane. In the first stage, a small portion of the syngas feed is processed to produce acetic acid which is needed for culture growth in the second stage bioreactor. Carbon monoxide is converted to acetic acid by the P. productus anaerobe according to the following reaction:

$$4\ CO(g) + 2\ H_2O(l) \longrightarrow CH_3\ COOH(l) + 2\ CO_2(g)$$

TABLE 3.1

PRODUCT SNG SPECIFICATIONS

- **Interchangeability**

  Criteria for acceptability:

Lifting Index (I_L)	1.06	maximum
Flash-Back Index (I_F)	1.20	maximum
Yellow Tip Index (I_Y)	0.80	minimum

- **Composition**

	Maximum
Carbon Monoxide	0.1% vol.
Hydrogen Sulfide	0.25 grains/100 SCF
Total Sulfur	10 grains/100 SCF
Water	7 lbs/MMSCF

- **Heating Value**

  Measured at 14.7 psia and 60°F: 950 BTU (HHV)/SCF

- **Delivery Pressure**

  Pressure 1000 psig

TABLE 3.2

COAL CHARACTERISTICS

GENERAL DESCRIPTION

Rank	Bituminous
Coal Seam	Pittsburgh No. 8
Mining Method	Underground
Preparation	Run of Mine

PROPERTIES

Proximate Analysis, as received, Wt%	
Moisture	12.0
Volatile Matter	34.0
Fixed Carbon	45.2
Ash	8.8
	100.0
Ultimate Analysis, dry, Wt%	
Carbon	74.30
Hydrogen	5.18
Nitrogen	1.50
Oxygen	6.10
Sulfur	2.90
Ash	9.90
Chlorine	0.12
	100.00
Heating Value of Coal, As Received	
BTU/lb (HHV)	11,870
Heating Value of Dry coal, BTU/lb (HHV)	13,490
Form of Sulfur as % of Total Sulfur	
Pyritic	52
Sulfate	1
Organic	47
	100
Hardgrove Grindability Index	59

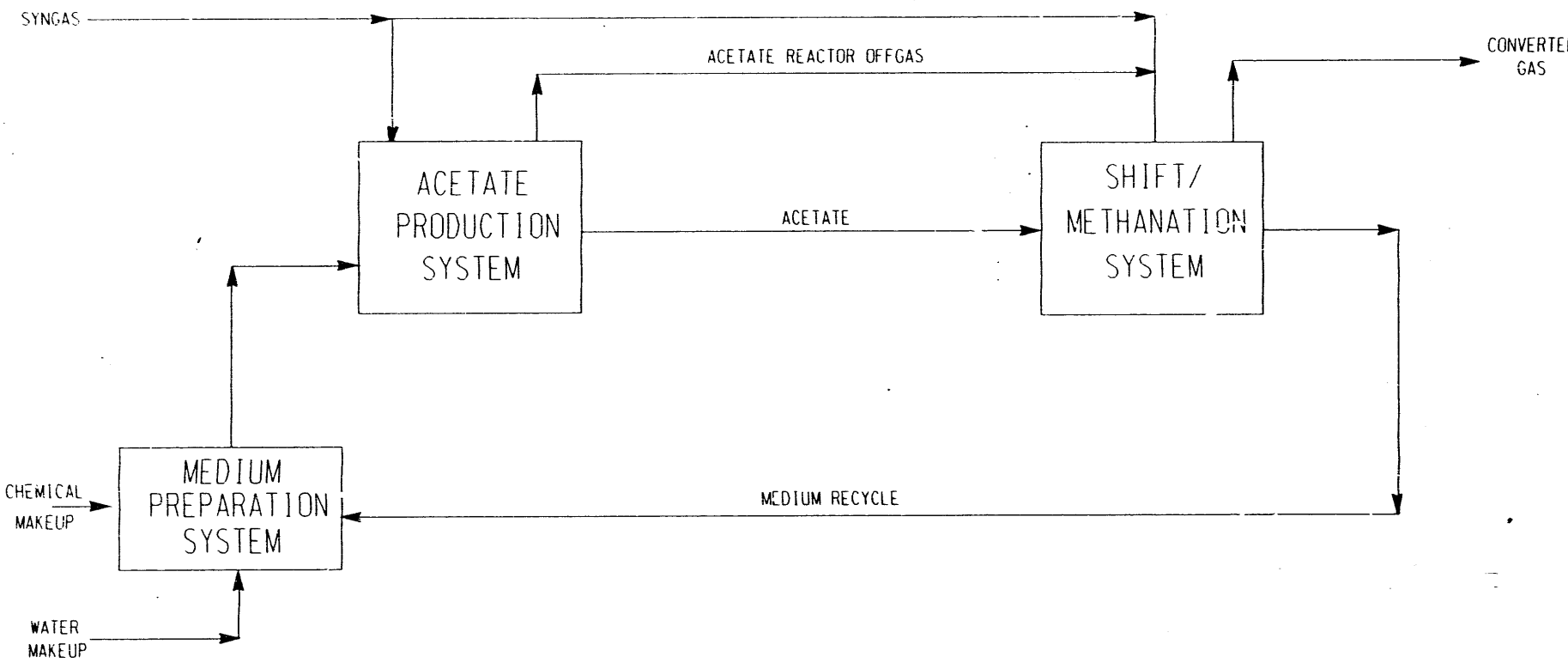

FIGURE 3.1
BLOCK FLOW DIAGRAM
BIOCONVERSION UNIT

C:\DGN\BLOCK.DGN Sep. 19, 1990 13:01:34

The second stage employs a co-culture of R. rubrum and M. foricicum for combined shift and methanation of the remaining syngas feed, i.e.

$$CO(g) + H_2O(l) \longrightarrow H_2(g) + CO_2(g)$$

$$4\ H_2(g) + CO_2(g) \longrightarrow CH_4(g) + 2\ H_2O(l)$$

For the nominal production of 125 billion BTU per day of SNG, the bioconversion unit was designed to process 52,244 lb-mols/hr of synthesis gas having the following composition:

	Mol%
CO	47.19
H_2	33.81
CO_2	11.15
CH_4	6.29
N_2 + A	0.54
NH_3	-
H_2S	0.81
COS	0.06
H_2O	0.15
	100.00

The design bases for the first and second stages of bioconversion, as established with the University of Arkansas, are summarized in Table 3.3.

TABLE 3.3

BIOCONVERSION DESIGN BASIS

Reaction Stage	First Acetate Production	Second Shift & Methanation
Culture Type	P. Productus	R. Rubrum & M. Formicicum
Reactor Type	CSTR	Cocurrent Packed Column
Operating Temperature, °F	100	100
Pressure, psia	425	415
Syngas Feed, %	2.0	98.0
Conversion, CO%	90	99.2
H_2%	-	98.5
Cell Concentration, gm/liter	50	120
Agitation Power, HP/ft^3	0.23	-
No. Reactors	2	10
Reactor Volume, ft^3	2,120	13,620
Gas Residence Time, min	0.62	0.04
Net Heat of Reaction		
BTU/lb-mole CO	-	+ 990
BTU/lb-mole CH_4	-	- 47,900
BTU/lb-mol CH_3COOH	- 44,100	-

4.0 CONVENTIONAL COAL-BASED SNG PLANT

The conceptual design for the conventional coal-based SNG plant, employing catalytic shift and methanation, was extracted from an earlier GRI study (2) on coal gasification for SNG production. This plant is designed to produce 132 MMSCFD of SNG product, having a higher heating value of 950 BTU/SCF, from Pittsburgh No. 8 bituminous coal.

4.1 Plant Description

A block flow diagram of the conventional coal-based SNG plant is shown in Figure 4.1. The grassroots plant design consists of the following processing units.

100 - Coal Preparation

Coal from live storage is conveyed to roll crushers where the size is reduced to minus 2 inches. The crushed coal is then conveyed to the Coal Drying and Grinding Unit.

150 - Coal Drying and Grinding

Minus 2 inch coal is fed to impact mills where it is ground in the presence of hot nitrogen sweep gas. The product coal is minus 1/4 inch with no more than 10% smaller than 100 mesh. The moisture content of the coal feed is reduced from 12% in the as-received coal to 7%. The Coal Drying and Grinding unit is designed for two operating trains plus one spare train.

200 - Gasification and Quench

This section consists of seven KRW fluidized-bed gasification trains (6 operating and one spare) using 99.5% oxygen as the oxidant. Minus 1/4 inch coal is fed to the gasifiers via a lockhopper system pressurized with CO_2. Coal, steam, and oxygen react in the gasifier at about 1900°F and 450 psia to produce a raw syngas stream. Syngas leaving the gasifier contains fine particulates which are removed in a cyclone separator and recycled to extinction in the gasifier.

Ash from the gasifier continuously enters the ash receiving hopper which operates at the gasifier pressure. The removal of ash as dry agglomerates allow for disposal without additional processing steps and minimizes the overall water usage in the KRW gasification system.

The raw product gas is cooled from 1875°F to 420°F in a heat recovery system which preheats boiler feed water and generates superheated steam at 1500 psia and 950°F. Finally, the product gas is quenched to saturated conditions and trace particulates are removed by scrubbing with water.

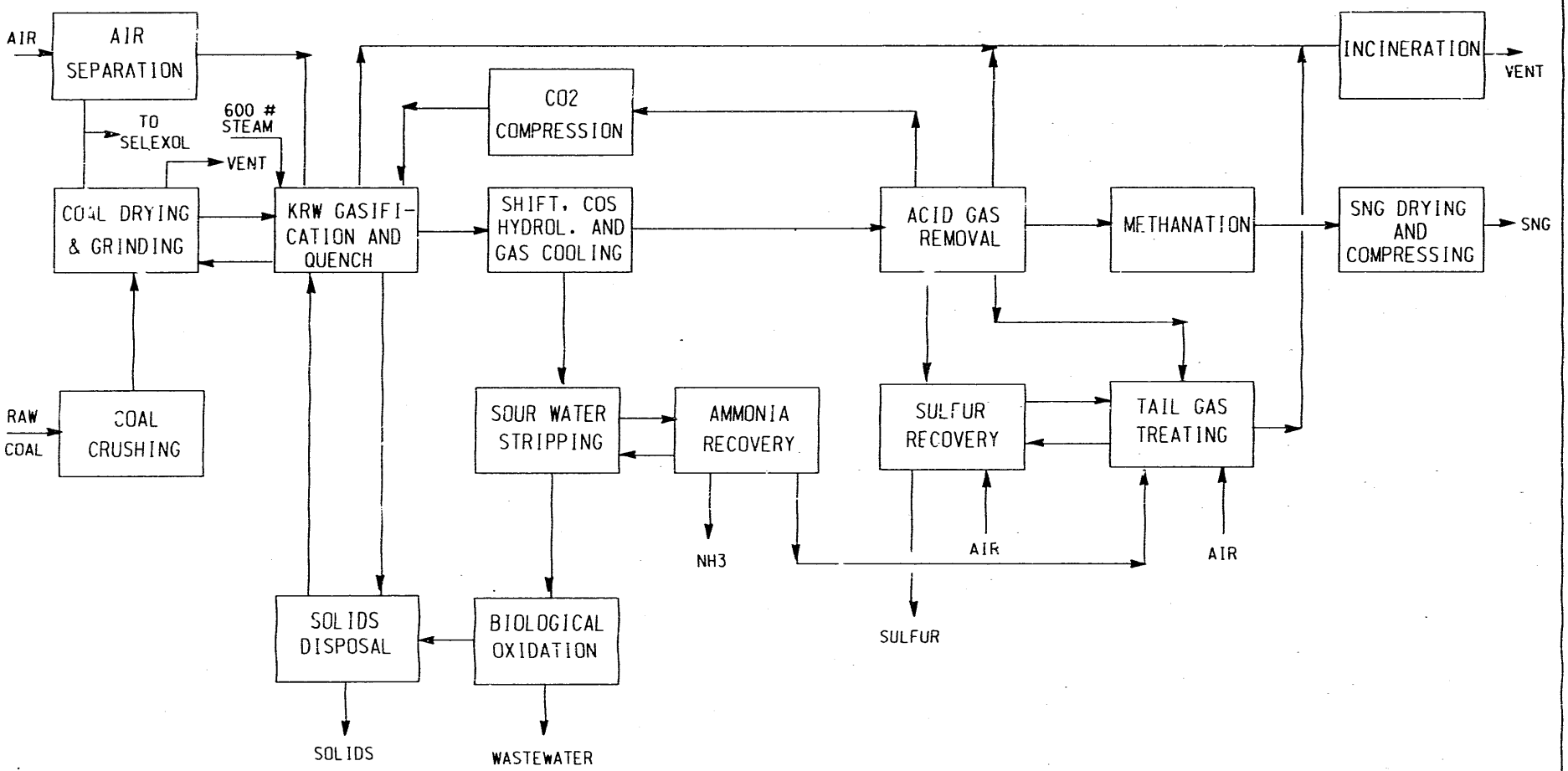

FIGURE 4.1
OVERALL BLOCK FLOW DIAGRAM
CONVENTIONAL CATALYTIC CONVERSION

C:\DGN\CAT.DGN Sep. 14, 1990 14:27:42

300 - Shift and Gas Cooling

This process unit, designed as two 50% trains, produces a syngas with a H_2/CO ratio of 3.2 and a COS content less than 72 ppm. The adjustment in H_2/CO ratio is required for methane synthesis, while COS hydrolysis facilitates sulfur compound removal in the Acid Gas Removal Unit.

Raw gas from gasification is preheated to 450°F by exchange with shift converter effluent gas. Approximately 82 percent of the preheated gas flows to the shift converters. Saturated 600 psig steam is added to the shift converter feed gas to obtain a steam/dry gas ratio of 0.30 in the shift converter effluent. The reactions occurring over the shift converter's cobalt-molybdenum catalysts are:

$$CO + H_2O \longrightarrow CO_2 + H_2$$

$$COS + H_2O \longrightarrow CO_2 + H_2S$$

Heat is recovered from the shift converter effluent by generating 600 psig saturated steam and by preheating shift converter feed. Cooled shift converter effluent is mixed with effluent from the COS hydrolysis reactors.

Approximately 18 percent of the preheated raw gas flows to the COS hydrolysis reactors. Haldor Topsoe's CKA catalyst, which is a specially activated alumina, is used in these reactors. The reaction occurring over the COS hydrolysis catalyst is:

$$COS + H_2O \longrightarrow CO_2 + H_2S$$

Effluent from the COS hydrolysis reactors and cooled effluent from the shift converters are combined. Heat recovered from the combined gas is used to heat feedwater, deaerator feedwater and make-up water to gasification. Following heat recovery, the gas is cooled to 95°F in air and water coolers.

400 - Acid Gas Removal

The Acid Gas Removal unit uses the Selexol process for selective removal of H_2S and CO_2 from the syngas stream. Two 50% trains are provided; each train consists of an H_2S removal section and a CO_2 removal section.

Shifted syngas is processed in the H_2S removal section where H_2S is selectively absorbed into a lean solvent. The H_2S concentration in the absorber overhead stream is reduced to about 6 ppmv. H_2S-rich solvent is sent to a reboiled stripper where acid gases are recovered and sent to the Claus sulfur recovery system.

Syngas from the H_2S absorber is sent to the CO_2 removal section where the CO_2 concentration is reduced to 1.1% by volume. The CO_2-rich solvent from the low pressure flash flows to the CO_2 stripper where nitrogen gas from the Air Separation Unit is used to strip CO_2 from the solvent. The stripper overhead gas and a portion of the low pressure vapor are incinerated in a catalytic incinerator to combust hydrocarbons and to convert trace sulfur compounds to sulfur dioxide. The regenerated solvent is recycled to the CO_2 absorber.

500 - Methanation

The Methanation Unit converts sweet gas from the Acid Gas Removal Unit to methane by the following exothermic reactions:

$$CO + 3H_2 \longrightarrow CH_4 + H_2O$$

$$CO_2 + 4H_2 \longrightarrow CH_4 + 2H_2O$$

Two 50 percent methanation trains are provided. In each train there are three catalytic reaction stages, each having two parallel fixed catalyst beds sized for 25 percent of plant capacity.

Sweet gas from the Acid Gas Removal unit is preheated and passed through zinc oxide beds to remove trace amounts of sulfur. The desulfurized feed is split so that 55% flows to the first stage methanators and 45% flows to the second-stage reactors. Methanated gas from the third-stage reactors is recycled to the first-stage reactors in order to limit the adiabatic temperature rise.

Effluent gas streams from the first and second stage reactors are cooled by generating 600 psig and 1500 psig saturated steam. The third-stage product gas is first cooled by generating 600 psig steam and preheating feed gas to the unit. The product gas is then cooled to 95°F in air and water cooled exchangers.

600 - Drying and Compression

In this unit, the methanated gas is dehydrated in a glycol dehydration system and compressed to 1000 psig. The moisture content of the product SNG is reduced to less than 7 lb/MMSCF by contacting the gas with a regenerated glycol stream in a packed column. Two 50% drying and compression trains are provided.

800 - Claus Sulfur Recovery

The sulfur plant is a two-stage, split-flow type Claus unit and two 100% trains are provided. Actual sulfur recovery per pass in the Claus unit is about 93.6%. Unrecovered sulfur is sent to the tail gas treating unit where the sulfur is recovered as H_2S and recycled back to the Claus plant. Overall sulfur recovery of the combined Claus plus tail gas treating units is 99.8% of the sulfur in the fresh feed to the Claus unit.

In the sulfur recovery unit, H_2S and SO_2 react in the two converter stages to produce elemented sulfur:

$$2\ H_2S + SO_2 \longrightarrow 3S + 2H_2O$$

The reaction is carried out over fixed beds of alumina catalyst. Molten sulfur is condensed from the converter effluent stream via generating 60 psig steam. The tail gas at 325°F which contains sulfur compounds, mainly H_2S with some SO_2, COS, and elemental sulfur, flows to the SCOT tail gas treating unit.

850 - Tail Gas Treating

The Shell Claus Off-gas Treating (SCOT) process is used to remove sulfur compounds from Claus plant tail gas and Ammonia Recovery Unit acid gas. One operating train is provided. A spare train is not included for the short periods of time the SCOT Unit is not available, because the tail gas can bypass the SCOT Unit and go directly to the Vent Gas Incinerator.

The SCOT process is designed to remove H_2S from atmospheric pressure effluent gas streams. Because the SCOT solvent is not suitable for handling gas streams that contain substantial amounts of SO_2, COS, and elemental sulfur, these compounds are first catalytically converted to H_2S. The reactions occur over a cobalt-molybdenum catalyst in the presence of hydrogen and steam.

A feed gas hydrogen content 1.5 percent in excess of the stoichiometric demand is sufficient to convert essentially all sulfur compounds to H_2S, with the exception of some residual (perhaps 50 ppmv) COS. The tail gas stream does not contain enough hydrogen or carbon monoxide to react with the various sulfur compounds. Therefore, a small amount of sweet gas from the Acid Gas Removal Unit supplies the necessary hydrogen and carbon monoxide. The sweet gas is partially combusted in a reducing gas generator and then mixed with the tail gas stream.

The effluent from the hydrogenator is cooled and then treated in an amine absorption tower where essentially all of the H_2S is removed, with only a small amount of CO_2 being coabsorbed. Treated gas, containing about 270 ppmv total sulfur, is sent to the vent gas incinerator. Rich amine solution is regenerated in a reboiled stripper and the overhead acid gas stream is recycled back to the Claus plant for recovery of sulfur.

900 - Sour Water Stripping

Two 50 percent sour water strippers remove H_2S, CO_2 and NH_3 from the plant sour water streams. Sour waters from the Gasification and Quench Unit, Shift and Gas Cooling Unit, and SCOT Tail Gas Treating Unit comprise the total feed to this unit.

The plant sour water streams are combined and preheated against sour water stripper bottoms and fed to the sour water stripper. In the stripper, dissolved gases are stripped from the water using a steam heated reboiler. The vapor leaving the stripper flows to the ammonia absorber in the Ammonia Recovery Unit. The stripper bottoms are cooled against the stripper feed prior to flowing to the Biological Oxidation Unit for final treating or back to the Gasification and Quench Unit as makeup.

950 - Ammonia Recovery

The Ammonia Recovery Unit utilizes the Phosam-W process for recovering ammonia from sour water stripper overhead gas. Two 50 percent ammonia recovery trains are provided. Sour water stripper overhead gas is contacted with an ammonia-lean phosphoric acid solution in an absorber. The ammonia-free gas flows to the SCOT Tail Gas Treating Unit while the ammonia-rich absorber bottoms is regenerated in a steam-reboiled stripper. The steam-reboiled fractionator column produces 99.5 percent pure liquid ammonia which is pumped to storage. The water removed from the bottom of the fractionator is recycled to the sour water stripper.

Support Facilities

The grassroots SNG plant is also provided with all the necessary offsite units and support systems to supply utilities, meet environmental regulations, and maintain plant operation. These systems include the following:

1000-	Air Separation
1100-	Biological Oxidation
2000-	Steam Generation
2100-	Power Generation
2200-	Solids Disposal
2300-	Plant Water System
2400-	Waste Water Evaporation
2500-	Coal Receiving & Storage
2600-	Cooling Water System
2700-	Vent Gas Incinerator
2800-	General Facilities

The general plant facilities include the raw water system, product storage, buildings, electric power distribution, site preparation, fire water system, and interconnecting piping.

4.2 Mass and Energy Balances

The overall mass and energy balances for the conventional coal-based SNG plant are summarized in Table 4.1. Accordingly, the cold gas efficiency for this plant is about 68%.

4.3 Operating Summary

The coal-based SNG plant is designed as a grassroots facility such that only coal, raw water, and consumable catalyst and chemicals are supplied from external sources. The plant steam, electric power, and cooling water requirements are all satisfied internally. Overall plant performance is summarized as follows:

Coal Feed, TPD (as received)	7,780
Raw Water, GPM	3,054
SNG Product, MMSCFD	131.6
BTU (HHV)/SCF	950
Volume %	
CH_4	92.66
H_2	4.45
CO	0.01
CO_2	0.80
N_2 + A	2.07
H_2O	0.01
	100.00
By-Products: Sulfur, TPD	179
Ammonia, TPD	30
Solids to Disposal, TPD	1,409
Catalyst & Chemicals, $/Day	14,250

The SNG product is delivered at 95°F and 1000 psig and meets the criteria for acceptability as defined in the GRI guidelines (1).

There are no coal-fired boilers in this plant design. During normal operation, high pressure superheated steam is generated via heat recovery systems in the gasification and methanation units. This steam is sufficient to satisfy all the plant requirements.

The total plant electric power requirement is approximately 17.6 MW which is generated on-site via steam turbine generators. Electric power requirements are minimized by driving all large compressors and pumps with steam turbines.

Water cooled exchangers are used for all steam turbine surface condensers and for most cooling services below 140°F. The plant cooling water system has a circulation rate of 115,150 gpm which corresponds to a heat removal duty of 1370 MMBTU/HR.

TABLE 4.1

OVERALL MASS AND ENERGY BALANCES

CONVENTIONAL SNG PLANT

INPUT	LB/HR	MMBTU/HR
As received Coal	648,244	7698.8
Oxygen to Gasifiers	381,818	20.3
Combustion Air	203,098	2.0
Nitrogen	448,293	7.3
Raw Water	1,526,804	-
Total	3,208,257	7728.4

OUTPUT		
SNG Product	230,095	5233.6
Sulfur	14,884	58.1
Ammonia	2,458	22.5
Stack Gases	1,564,986	63.3
Water Losses	18,293	-
Cooling Tower Loss	1,258,599	1369.4
Steam System Loss	1,500	1.6
Solids to Disposal	117,442	272.0
Air Cooling & Misc.	-	707.9
Total	3,208,257	7728.4

4.4 Estimated Capital Costs

Capital cost estimates for the coal-based SNG plant were based on mid-1985 dollars for a plant location in Western Pennsylvania. The estimates include a single project contingency to allow for uncertainties in technical definition and estimating techniques. No process development allowance has been included since the design is assumed to be based on mature technology.

The facilities construction costs for the processing units and support systems are summarized in Tables 4.2 and 4.3, respectively. The estimated total capital investment is detailed in Table 4.4.

TABLE 4.2

CONVENTIONAL COAL-BASED SNG PLANT

ESTIMATED PROCESSING FACILITIES COST

Basis: Mid-1985

	Plant Section	No. Trains	Base FCI $MM
1100	Coal Preparation	2+1	26
200	Gasification and Quench	6+1	185
300	Shift and Gas Cooling	2	13
400	Acid Gas Removal	2	60
500	Methanation	2	37
600	SNG Drying and Compression	2	8
700	CO_2 Compression	2	4
800	Claus Sulfur Recovery	1+1	7
850	Tail Gas Treating	1	5
900	Sour Water Stripping	2	4
950	Ammonia Recovery	2	4
	Total Process FCI*		353

* Facilities Construction Investment

TABLE 4.3

CONVENTIONAL COAL-BASED SNG PLANT

ESTIMATED SUPPORT FACILITIES COST

Basis: Mid-1985

	Plant Section	No. Trains	Base FCI $MM
1000	Air Separation	2	86
1100	Biological Oxidation	1	11
2000	Steam Generation	2	23
2100	Power Generation	2	8
2200	Solids Disposal	2	8
2300	Plant Water System	2	2
2400	Waste Water Evaporation	2	4
2500	Coal Receiving and Storage	1+1	15
2600	Cooling Water System	1	5
2700	Vent Gas Incinerator	2	9
2800	General Facilities	2	92
	Total Support FCI*		263

* Facilities Construction Investment

TABLE 4.4

CONVENTIONAL COAL-BASED SNG PLANT

SUMMARY OF CAPITAL COSTS

Basis: Mid-1985

	$MM
Processing Facilities Cost	353
Support Facilities Cost	263
Project Contingency @ 15%	92
Direct FCI*	708
Engineering & Design Cost @ 13.5%	96
Total FCI*	804
Initial Catalyst Inventory	15
Paid-up Royalty	6
Start-up Cost	65
Total Plant Investment	890
Working Capital:	
Coal Inventory	12.0
Materials & Supplies	7.2
Spare Parts	7.1
Land	1.0
	27.3

* Facilities Construction Investment

5.0 BIOCONVERSION SYSTEM DESIGN

5.1 System Description

The bioconversion system design used for this study is based on the work carried out at the University of Arkansas by Dr. J. L. Gaddy and associates. The design, as it is presently conceived, consists of three subsystems. The interrelationship of the three subsystem is shown on the block flow diagram in Figure 5.1. The principal subsystem is the shift/methanation system where a majority of the raw synthesis gas is converted to methane using a co-culture of R. rubrum and M. formicicum. The co-cultures are grown on beds of packing in packed column reactors.

A small amount of synthesis gas is converted to acetate which is needed for the growth of R. rubrum cells. Acetate is produced in the acetate production subsystem using a pure culture of P. productus in continuous stirred tank reactors. Acetate produced in the reactors and retained in the culture media is separated, with the culture medium, from the P. productus cells. The acetate/medium solution is fed to the shift/methanation reactors to furnish the needed nutrients and minerals for the growth of R. rubrum and M. formicicum. The nutrient and mineral requirements are very small and are used in very dilute concentrations. The culture medium is prepared, sterilized, and cooled in the medium preparation subsystem. Detailed descriptions of the three systems are given below.

Acetate Production Subsystem

The process flow diagram for this subsystem is shown in Figure 5.2. About 2% of the cooled raw gas produced from coal gasification is fed to the acetate production subsystem which consists of two parallel trains. In each train, there is a single 2120 cubic feet mechanically agitated reactor. Cooled raw gas at 85°F and 408 psig is fed to the reactor through a sparger located below the agitator impeller near the bottom of the reactor. A 500 horsepower electric motor driven agitator is provided. The intensive agitation breaks up the gas bubbles in the slurry solution to help dissolution of the gas. Agitation also provides turbulence to remove the product from the microorganism as it is produced to minimize local build-up of product concentration. Excessive product concentration inhibits the conversion reaction (4). In the reactor, 90% of the CO, dissolved in the solution, is reacted with water to produce acetic acid and CO_2. The overall reaction is represented by the following equation:

$$4\ CO(g) + 2\ H_2O\ (l) \longrightarrow CH_3COOH(l) + 2\ CO_2(g)$$

This reaction is exothermic and the estimated heat of reaction at 100°F is 101,900 BTU per pound mol of acetic acid produced. Energies consumed by the microorganism for growth and for maintenance are estimated to be

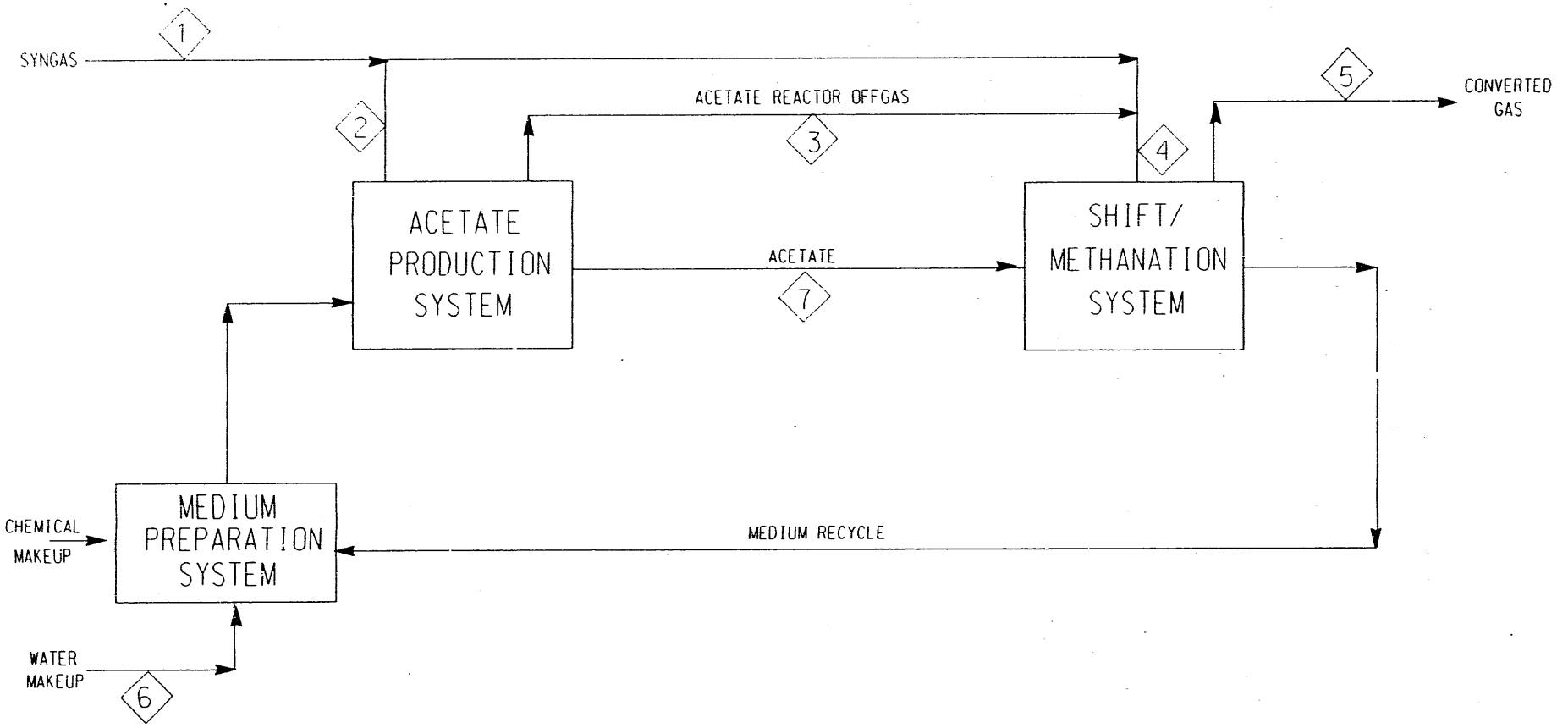

FIGURE 5.1
BLOCK FLOW DIAGRAM
BIOCONVERSION UNIT

C:\DGN\BLOCK.DGN Sep. 17, 1990 10:41:14

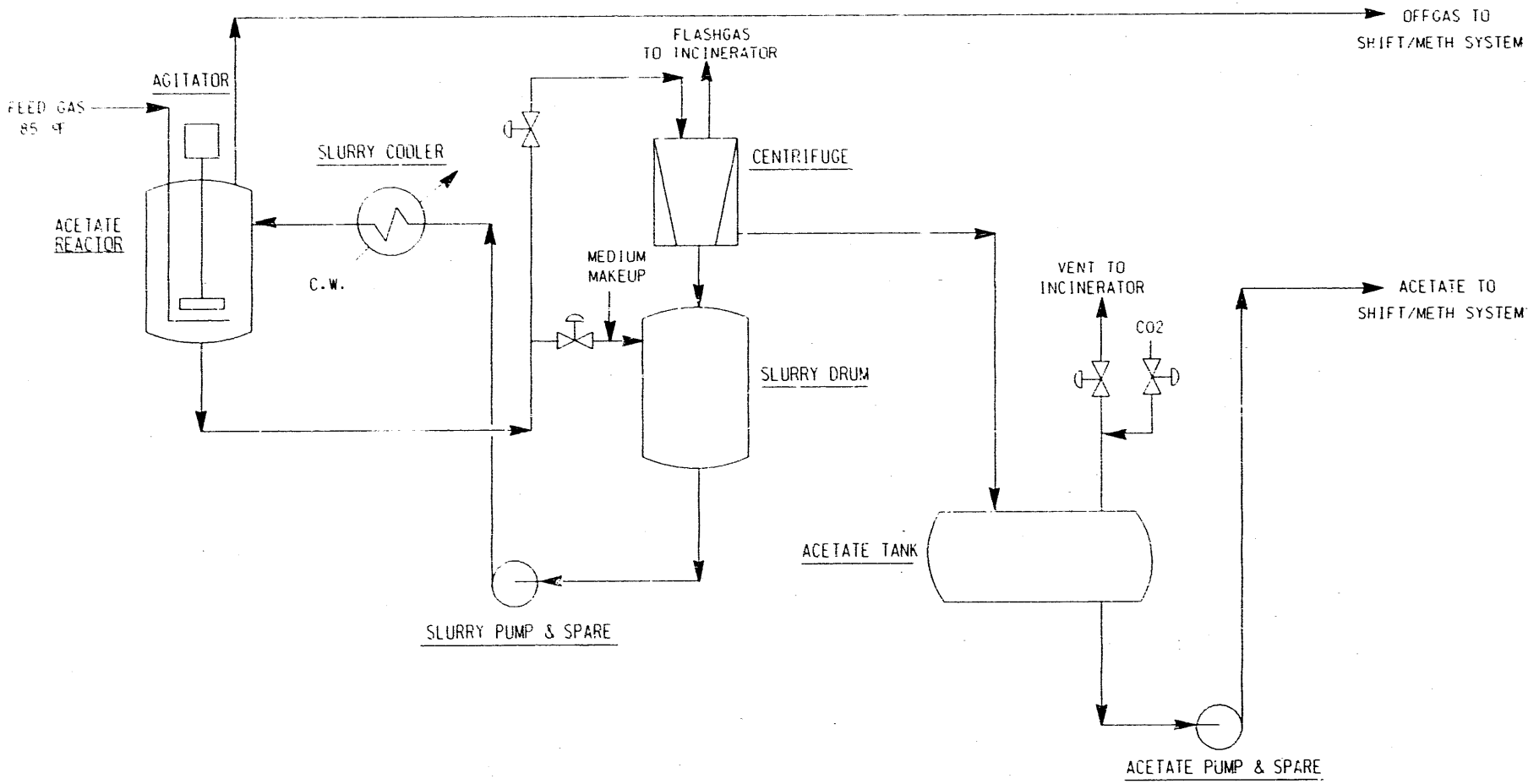

FIGURE 5.2
ACETATE PRODUCTION SYSTEM

C:\DGN\ACETATE DGN Sep. 17, 1990 12:49:33

39,800 and 18,000 BTU per pound mol of acetic acid produced, respectively. This results in a net heat release from the above reaction of 44,100 BTU per pound mol of acetic acid produced.

The reactor operates at 408 psig inlet gas pressure and at temperatures between 90 to 100°F. The slurry solution containing the product acetic acid and P. productus cells is removed from the reactor at pressure and is letdown to 315 psig to feed a vertical Super-D-Canter type pressurized centrifuge. The centrifuge is commercially available at a design pressure of 350 psig. The centrifuge extracts about 40% of the solution from the slurry, representing the minimum liquid removal rate needed to prevent excessive product buildup in the solution which can inhibit the conversion reaction. The extracted acetate/medium solution is stored in the Acetate Tank which provides 5 minutes of storage capacity and from which it is pumped to the Shift/Methanation subsystem.

The balance of the solution from the centrifuge, along with all the P. productus cells, is discharged into the Slurry Drum. Makeup medium solution is also added to the slurry drum. Slurry in the drum is pumped back to the reactor through a cooler. The cooler removes essentially all the heat liberated from the reaction to maintain the reactor operating temperature. The minimum slurry flow through the cooler is 470 gpm representing the flow needed for reaction heat removal while limiting the maximum solution temperature rise across the reactor to 10°F. It has been assumed that two percent of the P. productus cells in the circulating slurry are destroyed by attrition or by natural causes. This assumption, coupled with the assumed cell growth rate, limits the maximum slurry circulation rate to 540 gpm. The dead cells are expected to lyse and give back the chemicals and minerals used for cell growth. This is the reason why there is essentially no chemicals and minerals makeup requirement except for incidental leakages and losses. Unreacted gas, as well as CO_2 produced from the reaction, leaves from the top of the reactor and is mixed with the main gas stream which is sent to the Shift/Methanation reactors.

Shift/Methanation Subsystem

The process flow diagram for this subsystem is shown in Figure 5.3. Cooled raw syngas plus all the offgas from the acetate production subsystem are fed to the shift/methanation subsystem which consists of ten parallel trains. There is a packed column reactor in each train with a circulating pump and a solution cooler. Each packed column reactor has five beds packed with 3" ceramic Raschig rings. The packings are supported by grid type packing supports. Liquid feed to the top of each packed section is distributed using a trough type distributor. Liquid is also added to the upper four packed beds in each reactor at two other elevations through pipe distributers. Liquid from each packed bed is collected at the bottom of the bed and trapped out using a chimney tray type collector. The chimney tray allows gas to pass through to the next

FIGURE 5.3
SHIFT/METHANATION SYSTEM

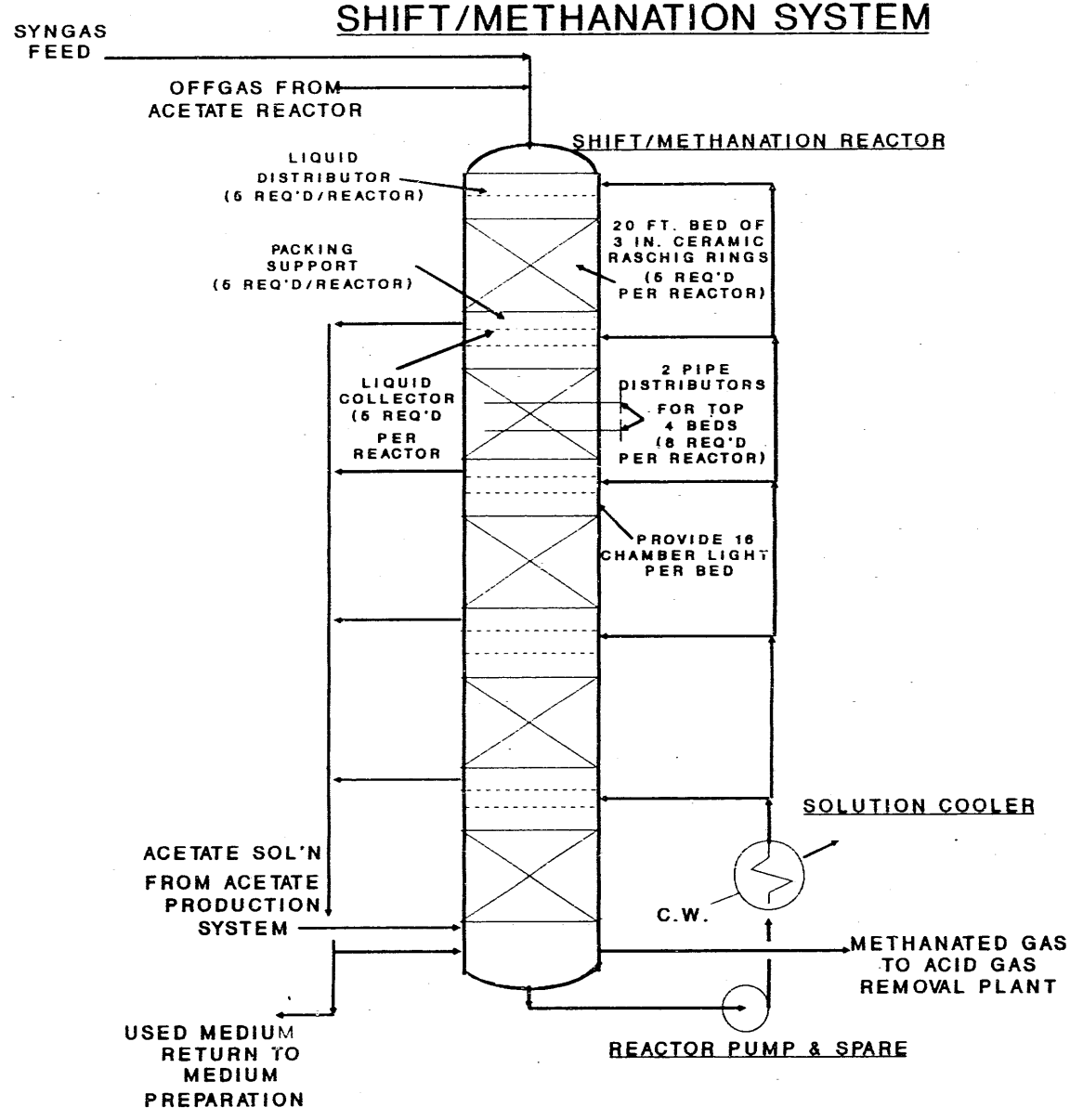

packed section and prevents liquid flow to the next bed. The liquid trapped out is allowed to drain into the liquid sump located at the bottom of the packed column reactor. Acetate/medium solution from the acetate production subsystem is also added to the liquid sump.

The solution in the sump is circulated through a cooler back to the column through various addition points under flow control. The flow rates are predetermined to limit the amount of CO dissolved in the liquid, especially for the upper four beds where CO concentration in the gas is high. The conversion of CO to hydrogen by R. rubrum and conversion of CO_2 to CH_4 by M. formicicum are both inhibited by high CO concentrations in the solution. This inhibition effectively reduces the usefulness of the reactor volume provided (4).

Feed gas enters the reactor at the top and flows co-currently with the liquid down through the packed section in a trickle bed fashion. The co-culture microorganisms are grown on the packing thereby allowing high cell concentrations as in immobilized cell reactors. Gas flows downward through the five sections of packing in series and is separated from the liquid below the fifth bed and removed from the column. Inside the column, dissolved CO reacts with water to form CO_2 and H_2 by the shift reaction:

$$CO(g) + H_2O(l) \longrightarrow CO_2(g) + H_2(g)$$

For this study, R. rubrum is used to carryout the shift reaction in the presence of a carbon source other than CO and tungsten light. The carbon source provided is the acetate which is produced in the acetate production subsystem. The amount of acetate required for R. rubrum cell production (0.374 gm R. rubrum cell produced per gm of acetic acid consumed), the useful life of R. rubrum cell (7 days), and the hourly conversion of CO to H_2 by the living R. rubrum cell (0.055 gm-mol CO converted per gm of R. rubrum cell) have all been determined by experimentation at the University of Arkansas (4, 5). Sixteen Pressure-Chamber-Light has been provided for each packed bed to transmit the light required for R. rubrum cell growth. The liquid-phase shift reaction is estimated to be slightly endothermic with a reaction heat requirement of 990 BTU per pound mol of CO converted.

Hydrogen formed by the shift reaction, as well as dissolved hydrogen, reacts with CO_2 in the solution to form methane by the methanation reaction:

$$CO_2(g) + 4\ H_2(g) \longrightarrow CH_4(g) + 2\ H_2O(l)$$

This reaction is carried out by M. formicicum and is exothermic. The estimated exothermic heat of reaction is 108,600 BTU per pound mol of methane produced. Energy consumed by the microorganisms for growth and maintenance are estimated to be 36,600 and 24,100 BTU per pound mol of

methane produced, respectively. Based on the selected cell concentration (120 gm/liter), packing type (3" ceramic Raschig ring), and reactor diameter, a series of calculations were carried out by the University of Arkansas at various bed heights and percentage conversions to determine the limiting liquid circulation rates entering and leaving each bed of packing. A combined set of conditions with adequate liquid flows to achieve the required conversion and heat removal was determined and used for equipment design. This set of conditions indicated that five beds are required at different percentage conversions in each bed. The percentage conversions are 24.5, 30.5, 43.0, 58.0 and 85.5 with bed depth of 5.75, 5.75, 5.75, 5.0 and 4.5 meters from top bed to bottom bed for an overall conversion of 98%. By increasing the bottom two bed depth to 5.75 meters, the conversion can be increased to 63.0 and 93.0% respectively to achieve an overall CO conversion of 99.2%. The latter is used for this study.

Medium Makeup Subsystem

The process flow diagram for this subsystem is shown in Figure 5.4. Chemical and mineral makeup to the system is prepared batchwise by mixing in the agitated Chemical Makeup Tank. The relatively concentrated makeup solution is added to the make-up process condensate by the metering pump through a mixing tee. The process condensate makeup to the system is stored in the medium storage tank along with recycled medium. The medium storage tank operates at 375 psig has five minutes of storage capacity. Normally, the medium flows under pressure through the heater where it is heated by 60 psig steam to 280°F and held in the surge drum for three minutes to sterilize the medium. The sterilized medium is cooled to 100°F in the medium cooler and flows to the Slurry Drum in the acetate production subsystem. A startup medium circulating pump has been supplied to provide medium circulation when various parts of the system are not yet at the required operating pressure.

5.2 Heat and Material Balances

The overall material balance for the biological conversion unit is summarized in Table 5.1, were the major process streams are keyed to the system block flow diagram (Figure 5.1). Individual mass balances for the overall system, are given in Table 5.2. The overall water balance for the bioconversion unit is summarized in Table 5.3.

5.3 Operating Requirements

Steam consumption and cooling water requirements for the bioconversion unit are summarized in Table 5.4. The normal electric power requirement for this unit is estimated at 7.6 MW as shown in Table 5.5.

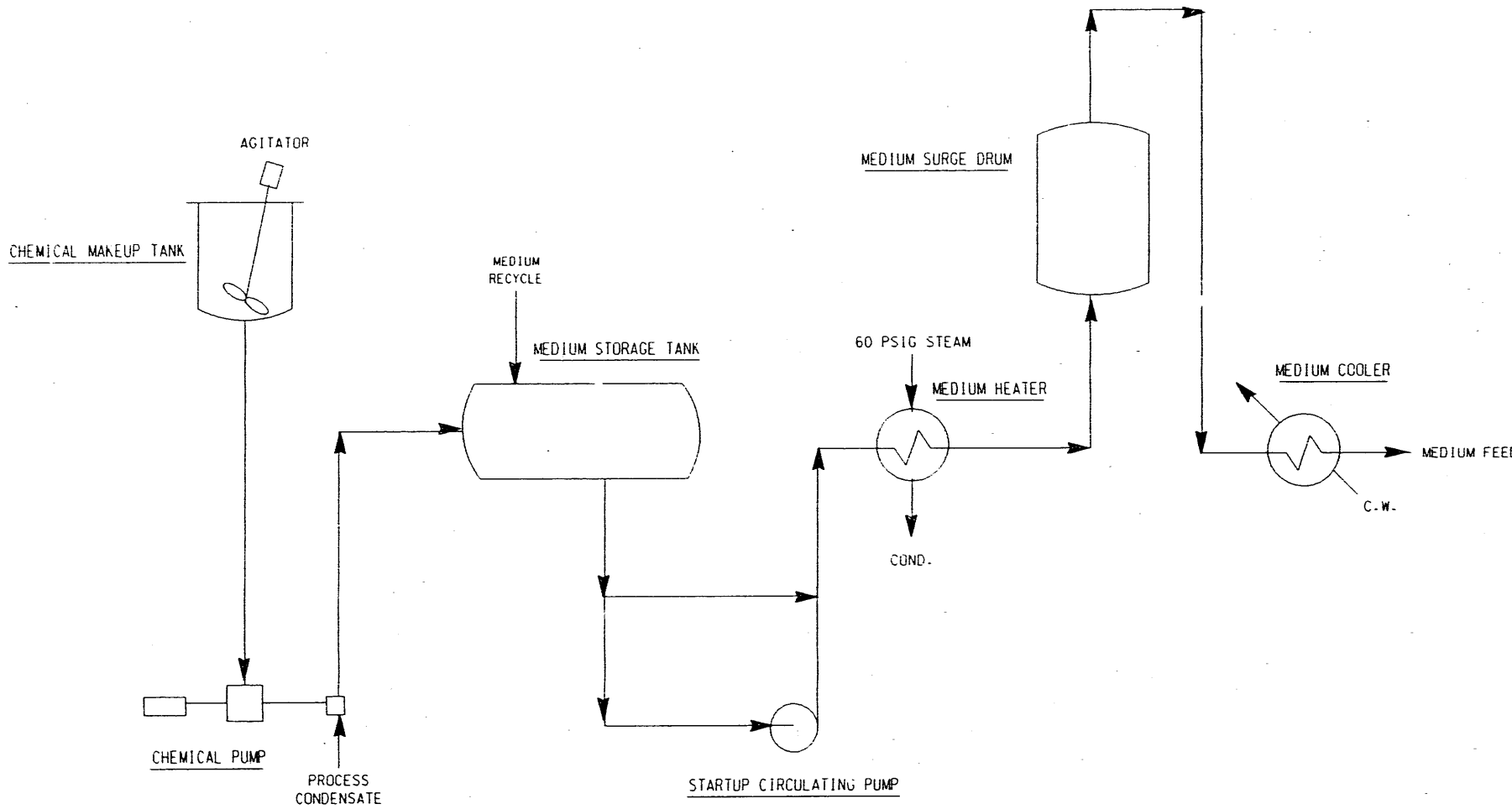

FIGURE 5.4
MEDIUM PREPARATION SYSTEM

C:\DGN\MEDIA.DGN Sep. 17, 1990 10:43:44

TABLE 5.1

BIOCONVERSION SYSTEM MATERIAL BALANCE

STREAM NO.	1 FEED GAS	2 GAS TO ACETATE	3 OFFGAS FROM ACETATE	4 GAS TO SHIFT/METH	5 GAS FROM SHIFT/METH	6 PROCESS COND. FEED	7 ACETATE MAKE
H2	17661.0	364.8	364.8	17661.0	612.8	–	–
CO	24652.4	509.3	50.9	24194.0	187.4	–	–
CO_2	5825.2	120.3	349.5	6054.4	19797.3	–	–
CH_4	3285.2	67.9	67.9	3285.2	13548.9	–	–
A	43.2	0.9	0.9	43.2	43.2	–	–
N_2	240.8	5.0	5.0	240.8	240.8	–	–
H_2S	422.0	8.7	8.7	422.6	422.6	–	–
COS	32.9	0.7	0.7	32.9	32.9	–	–
NH_3	0.1	–	–	0.1	–	–	–
HAC	–	–	–	–	–	–	114.6
H_2O	80.6	1.7	2.2	81.1	93.9	3721.7	–
TOTAL, MOLS/HR	52244.0	1079.3	850.6	52015.3	34979.8	3721.7	114.6
TOTAL, LB/HR	1,061,488	21,930	19,186	1,058,744	1,121,652	67,046	6,882
T °F	85	85	100	85	100	100	100
PSIA	423	423	416	415	404	398	423

TABLE 5.2

BIOCONVERSION SYSTEM MASS BALANCES

MEDIUM PREPARATION SUBSYSTEM	LBS/HR
Input	
Recycled Medium	146,510
Makeup Water	67,046
Total Input	213,556
Output	
Medium Flow	213,556
Total Output	213,556

ACETATE PRODUCTION SUBSYSTEM	LBS/HR
Input	
Medium Feed (Excluding Chemicals & Minerals)	213,556
Gas Feed	21,930
Total Input	235,486
Output	
Medium Flow	209,418
Gas Out	19,186
Acetate Make	6,882
Total Output	235,486

TABLE 5.2 (Cont'd)

SHIFT/METHANATION SUBSYSTEM	LBS/HR
Input	
Raw Gas Feed	1,039,558
Offgas From Acetate Production	19,186
Medium Feed	209,418
Acetate Feed	6,882
Total Input	1,275,044
Output	
Converted Gas	1,121,652
Medium Flow	146,510
Acetate Consumed	6,882
Total Output	1,275,044

OVERALL BALANCE	LBS/HR
Input	
Gas Feed	1,061,488
Water Makeup	67,046
Total Input	1,128,534
Output	
Gas Out	1,121,652
Gas Consumed As Acetate	6,882
Total Output	1,128,534

TABLE 5.3

BIOCONVERSION SYSTEM WATER BALANCE

	LBS/HR
Input	
Feed Gas	1,452
Process Condensate Make-up	67,046
Total Input	68,498
Output	
Product Gas	1,691
Consumed By Acetate Reaction	4,129
Net Consumed By Shift/Methanation Reaction	62,678
Total Output	68,498

TABLE 5.4

BIOCONVERSION SYSTEM

STEAM CONDENSATE AND COOLING WATER REQUIREMENTS

60 PSIG Steam Consumption		
To Medium Heater	42,115	LBS/HR
Steam Condensate Produced		
From Medium Heater	42,115	LBS/HR
Cooling Water Requirements	GPM	T °F
Slurry Coolers (20)	717	10
Solution Coolers (10)	93,640	10
Medium Cooler (1)	(7,940)	10
	94,357	10.8

TABLE 5.5

BIOCONVERSION SYSTEM

ELECTRIC POWER CONSUMPTION

	KW
Acetate Production Subsystem	
Agitators (2)	828
Centrifuges (2)	520
Slurry Pumps (2)	114
Acetate Pumps (2)	42
Subtotal	1,504
Shift/Methanation Subsystem	
Reactor Pumps (10)	6,070
Reactor Illumination (10)	30
Subtotal	6,100
Medium Preparation	
Agitator	14
Chemical Pump (1)	2
Subtotal	16
Total	7,620

5.4 Estimated Capital Costs

The facility construction costs for each of the bioconversion subsystems was estimated for a Western Pennsylvania site in mid-1985 dollars. The estimates were developed from major equipment specifications and factored to an installed cost basis. The following estimated costs exclude engineering and design costs, process development allowances, and project contingency:

	$MM
Acetate Production	6.9
Shift/Methanation	70.2
Medium Preparation	0.8
Total	77.9

6.0 INTEGRATED BIOCONVERSION-SNG PLANT

The conceptual design for the coal-based SNG plant employing the bioconversion route for shift and methanation was developed as a grassroots facility, having a nominal capacity of 125 billion BTU/day of SNG from Pittsburgh No. 8 coal. The design was developed by integrating the bioconversion unit design, as described in Section 5.0, into the process configuration for the conventional coal-based SNG plant.

6.1 Plant Description

A block flow diagram for the coal-based SNG plant employing the syngas bioconversion route is shown in Figure 6.1. The conceptual plant design incorporates the following processing units:

100 - Coal Preparation
150 - Coal Drying and Grinding
200 - Gasification and Quench
300 - Gas Cooling
400 - Bioconversion Unit
500 - Acid Gas Removal
600 - SNG Compression
700 - CO_2 Compression
800 - Claus Sulfur Recovery
850 - Tail Gas Treating
900 - Sour Water Stripping
950 - Ammonia Recovery

Description of these processing units is essentially the same as for the conventional coal-based SNG plant except for the following:

300 - Gas Cooling

The gas cooling section was re-designed to eliminate the catalytic shift and COS hydrolysis operations which were included in the conventional plant design. The revised design is illustrated by the process schematic in Figure 6.2. Accordingly, the quenched raw syngas from the gasification section is cooled from 301°F to 85°F by a series of indirect heat exchangers which preheat boiler feed water and steam condensate, followed by heat rejection to air fan coolers and cooling water.

The cooled syngas stream is sent to the Bioconversion Unit while the aqueous condensate is processed in the Sour Water Stripping unit.

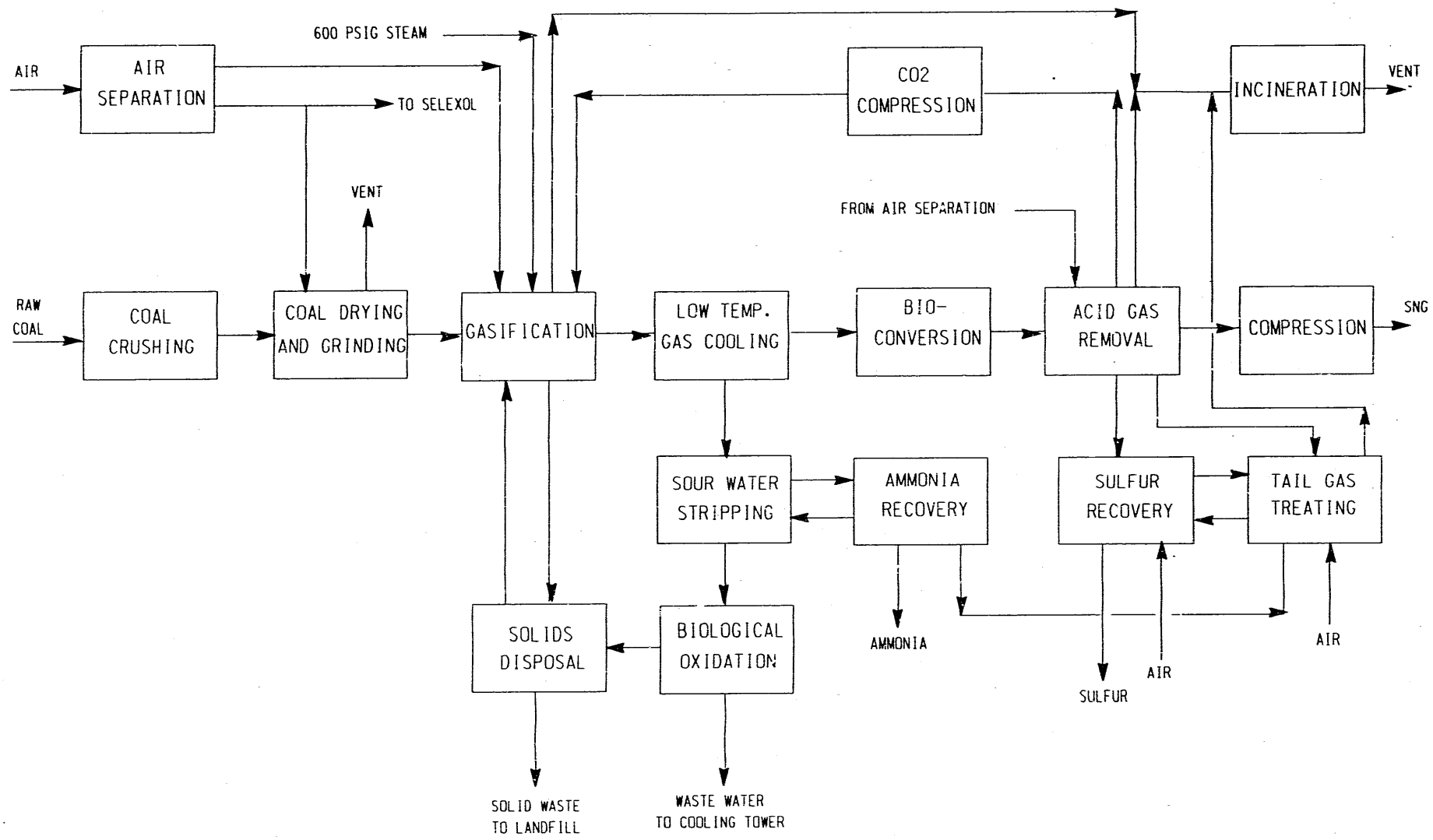

FIGURE 6.1
BLOCK FLOW DIAGRAM
INTEGRATED BIOCONVERSION SNG PLANT

C:\DGN\INTEG.DGN Sep. 14, 1990 10:23:03

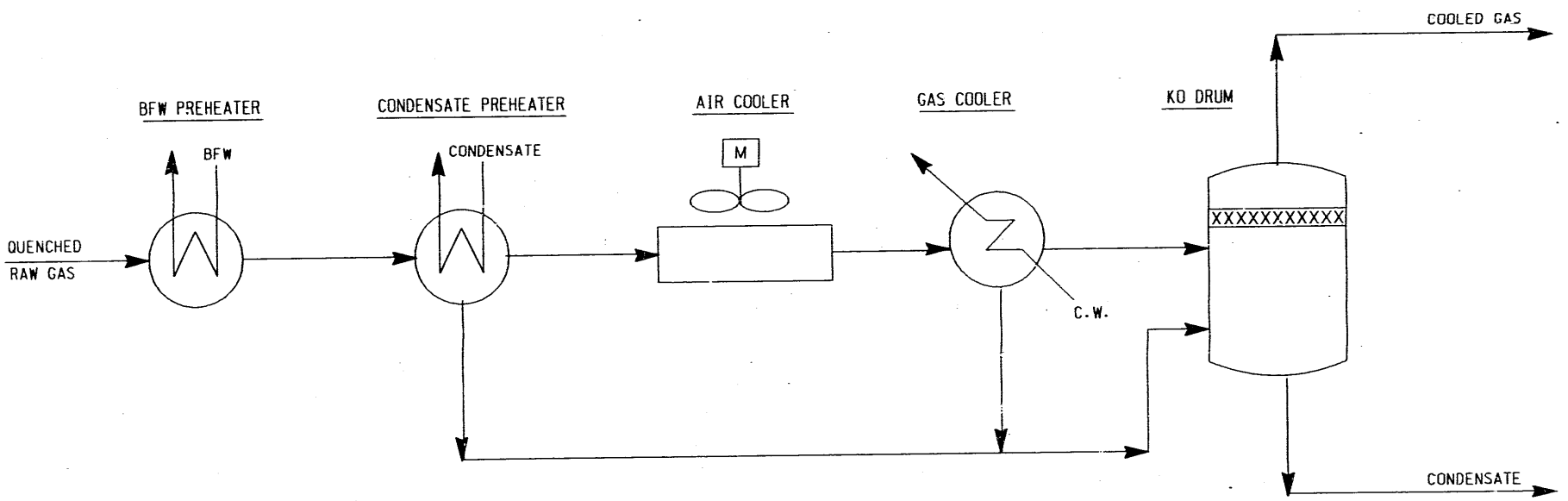

FIGURE 6.2
GAS COOLING UNIT
INTEGRATED BIOCONVERSION SNG PLANT

C:\DGN\GASCOOL.DGN Sep. 13, 1990 14:48:41

400 - Bioconversion Unit

As described in Section 5.0, the bioconversion unit design consists of the following subsystems:

Subsystem	No. Trains
Acetate Production	2
Shift/Methanation	10
Medium Preparation	1

This unit replaces the catalytic shift and methanation processing steps in the conventional coal-based SNG plant design. Raw syngas from the Gas Cooling unit is processed in a two-stage biological conversion system where, via the action of a mixed mircoorganism culture, essentially all of the CO and H_2 are converted to methane. Since the biological reactions occur at 100°F, there is no recovery of the exothermic heat of reaction, as is possible in the catalytic route. Consequently, the net heat of reaction is rejected to cooling water. Product gas from bioconversion is sent to the Acid Gas Removal system for removal of CO_2 and sulfur compounds.

500 - Acid Gas Removal

Feed gas to the Acid Gas Removal system is the methanated gas from the bioconversion system. Consequently, the molar gas flow to this system is greatly reduced compared to the catalytic conversion case where a shifted gas is fed to the Acid Gas Removal system. Norton Company provided the basis for the bioconversion case design.

600 - SNG Compression

After being treated in the Acid Gas Removal system, the product SNG stream is essentially bone-dry. Therefore, there is no need for a glycol dehydration unit to dry the SNG product as in the conventional processing route. In this unit, the product SNG stream is compressed from 370 psig and delivered at 1000 psig and 95°F.

Support Facilities

As with the conventional coal-based plant design, the integrated bioconversion SNG plant is provided with all the necessary offsite units and support systems to supply utilities, meet environmental regulations, and maintain plant operation. These systems include the following:

1000- Air Separation
1100- Biological Oxidation
2000- Steam Generation

2100-	Power Generation
2200-	Solids Disposal
2300-	Plant Water System
2400-	Waste Water Evaporation
2500-	Coal Receiving & Storage
2600-	Cooling Water System
2700-	Vent Gas Incinerator
2800-	General Facilities

These systems serve the same functions as in the conventional plant design. A major difference, however, is in the steam generation section where a coal-fired steam generator was added to satisfy the plant steam requirements.

6.2 Mass and Energy Balances

The overall mass and energy balances for the integrated SNG plant based on the bioconversion route are summarized in Table 6.1. The cold gas efficiency for this plant is about 60% compared to 68% for the conventional coal-based SNG plant. The lower efficiency is directly attributable to the additional coal required for plant steam generation in the bioconversion route.

6.3 Operating Summary

The integrated SNG plant is designed as a grassroots facility such that only coal, raw water, and consumable catalysts and chemicals are supplied from external sources. The plant steam, electric power, and cooling water requirements are provided from in-plant sources. The following summarizes the overall plant performance:

Coal Feed, TPD (as recvd)	
Gasification	7,780
Steam Generation	875
	8,655
Limestone, TPD	207
Raw Water, GPM	5,175
SNG Product, MMSCFD	129.5
HHV, BTU/SCF	952
Volume %	
CH_4	92.33
H_2	4.21
CO	1.28
CO_2	0.22
N_2 + A	1.95
H_2O	0.01
	100.00

TABLE 6.1

OVERALL MASS AND ENERGY BALANCES

BIOCONVERSION SNG PLANT

INPUT	LB/HR	MMBTU/HR
As Received Coal	721,119	8564.1
Oxygen to Gasifiers	381,818	20.3
Combustion Air	1,037,689	10.2
Nitrogen	483,032	7.6
Raw Water	2,587,475	-
Limestone	11,800	-
Total	5,222,933	8602.2
OUTPUT		
SNG Product	226,264	5143.6
Sulfur	14,884	58.1
Ammonia	1,885	17.3
Stack Gases	2,502,352	181.0
Water Losses	26,634	-
Cooling Water Loss	2,305,628	1887.9
Steam System Loss	1,500	1.6
Solids to Disposal	143,786	272.0
Bioconversion Loss	-	623.1
Air Cooling & Misc.	-	417.6
Total	5,220,022	8602.2

By-Products:	Sulfur, TPD	165
	Ammonia, TPD	22
Solids to Disposal, TPD		1,725
Catalyst & Chemicals, $/Day		2,149

The SNG product is delivered at 95°F and 1000 psig and meets all the established specifications except for CO content. Despite an overall CO conversion of 99.2% in the bioconversion unit, the residual CO content in the SNG product is about 1.3% compared to the maximum specification level of 0.1%. In order to reduce the CO level to less than 0.1%, a catalytic trim methanation unit is required. The economic impact of meeting the CO specification of 0.1% is addressed in Section 7.5 of this report.

The normal plant electric power requirement is approximately 30 MW, as summarized in Table 6.2. This requirement is satisfied by in-plant power generation via steam turbine generators. Electric power usage is minimized by driving all large compressors and pumps with steam turbines. The normal power usage is about 70% higher than that for the conventional SNG plant. Power usage in the bioconversion unit of 7.6 MW and increased cooling water usage, which translates to an additional 5.4 MW, account for the difference.

As in the conventional plant design, water cooled exchangers are used for all steam turbine surface condensers and for most cooling services below 140°F. The overall plant cooling water circulation, as summarized in Table 6.3, is 210,940 gpm which corresponds to a heat removal duty of 1,888 MMBTU/HR.

The overall plant steam balance is satisfied by operating a coal-fired circulating fluid-bed boiler to generate 1500 psig steam. This auxiliary boiler was needed since there is no waste heat recovery in the biological shift/methanation section. In addition to firing 875 TPD of coal for steam generation, the plant uses a small quantity of product gas, about 3.0 MMSCFD, to fire steam superheaters and to supply reducing gas for the SCOT Tail Gas Treating unit.

6.4 Estimated Capital Costs

Cost estimates for the coal-based SNG plant employing the bioconversion route were developed on a mid-1985 basis for a Western Pennsylvania site. A project contingency was included to account for uncertainties in technical definition and estimating techniques. However, since the plant design is assumed to be based on mature technology, the cost estimates do not include any process development allowance.

TABLE 6.2

BIOCONVERSION SNG PLANT

ELECTRIC POWER REQUIREMENT

AREA	DESCRIPTION	KW
100	Coal Preparation	353
150	Coal Drying & Grinding	2,715
200	Gasification & Quench	3,047
300	Gas Cooling	300
400	Bioconversion Unit	7,620
500	Acid Gas Removal	370
800	Claus Sulfur Recovery	280
850	Tail Gas Treating	690
900	Sour Gas Stripping	163
950	Ammonia Recovery	283
1000	Air Separation	(854)
1100	Biological Oxidation	132
2000	Steam Generation	735
2200	Solids Disposal	34
2300	Plant Water System	520
2400	Waste Water Evaporation	31
2500	Coal Receiving & Storage	360
2600	Cooling Water System	11,838
2700	Vent Gas Incinerator	85
2800	General Facilities	1,300
	Total	30,002

TABLE 6.3

BIOCONVERSION SNG PLANT

PLANT COOLING WATER USAGE

AREA	DESCRIPTION	GPM	Δ T°F
200	Gasification & Quench	3,013	30
300	Gas Cooling	2,410	30
400	Bioconversion Unit	94,360	11
500	Acid Gas Removal	16,420	30
600	SNG Compression	1,580	30
700	CO_2 Compression	420	30
850	Tail Gas Treating	2,807	30
950	Ammonia Recovery	347	30
1000	Air Separation	14,313	30
2100	Power Generation	75,270	20
	Total	210,940	17.9

The facilities construction costs for the processing units and support systems are summarized in Tables 6.4 and 6.5, respectively. Costs for Section 300 - Gas Cooling, Section 400 - Bioconversion Unit, and Section 2000 - Steam Generation were developed by Foster Wheeler from major equipment specifications. Costs for the other plant sections were prorated on capacity from the corresponding costs for the conventional coal-based SNG plant, as presented in Section 4.0 of this report. The estimated total plant investment and total capital investment are detailed in Table 6.6.

Capital costs for the bioconversion route compare to the conventional catalytic processing route as follows:

	Conventional Route	Bioconversion Route
Processing Facilities Cost, $MM	353	365
Support Facilities Cost, $MM	263	287
Total Plant Investment, $MM	890	922

The facilities construction costs for the bioconversion plant are about 3% higher while the total plant investment cost is about 4% higher than the conventional processing route.

TABLE 6.4

BIOCONVERSION SNG PLANT

ESTIMATED PROCESSING FACILITIES COST

Basis: Mid - 1985

	Plant Section	No. Trains	Base FCI $MM
100	Coal Preparation	2+1	26.4
200	Gasification & Quench	6+1	185.0
300	Gas Cooling	2	6.8
400	Bioconversion Unit		77.9
500	Acid Gas Removal	2	40.0
600	SNG Compression	2	6.0
700	CO_2 Compression	2	4.0
800	Claus Sulfur Recovery	1+1	7.0
850	Tail Gas Treating	1	5.0
900	Sour Water Treating	2	3.1
950	Ammonia Recovery	2	3.3
	Total FCI*		364.5

* Facilities Construction Investment

TABLE 6.5

BIOCONVERSION SNG PLANT

ESTIMATED SUPPORT FACILITIES COST

Basis: Mid - 1985

	Plant Section	No. Trains	Base FCI $MM
1000	Air Separation	2	86.0
1100	Biological Oxidation	1	4.1
2000	Steam Generation	2	42.0
2100	Power Generation	2+1	11.6
2200	Solids Disposal	1	9.2
2300	Plant Water System		2.9
2400	Waste Water Evaporation	1	5.8
2500	Coal Receiving & Storage		16.2
2600	Cooling Water Systems	1	7.6
2700	Vent Gas Incinerator	1	9.3
2800	General Facilities		92.0
	Total FCI*		286.7

* Facilities Construction Investment

TABLE 6.6

BIOCONVERSION SNG PLANT

SUMMARY OF CAPITAL COSTS

Basis: Mid - 1985

	$MM
Processing Facilities Cost	364.5
Support Facilities Cost	286.7
Project Contingency @ 15%	97.7
Direct FCI*	748.9
Engineering & Design Cost @ 13.5%	101.1
Total FCI*	850.0
Initial Catalyst Inventory	1.3
Paid-up Royalty	6.0
Start-up Cost	65.0
Total Plant Investment	922.3
Working Capital:	
Coal Inventory	13.3
Materials & Supplies	7.2
Spare Parts	7.1
Land	1.0
	28.6

7.0 ECONOMIC EVALUATION

7.1 Economic Guidelines

The following economic guidelines as proposed by GRI (1) were used to determine the annual operating and maintenance costs for the integrated coal-based SNG plants.

Cost of Coal	=	$35.00/ST
Cost of Limestone	=	$20.00/ST
Cost of Raw Water	=	$0.75/1000 gallons
Solids Waste Disposal Cost	=	$1.50/ST
Credit for Sulfur	=	$100/LT
Credit for Ammonia	=	$150/ST
Credit for Export Power	=	$0.05/kWh
Local Taxes and Insurance	=	$1.5% of TFCI
Total Maintenance Cost	=	3% of DFCI & PC
Maintenance Materials	=	40% of TMC
In-house Maintenance Labor	=	30% of TMC
Contract Maintenance	=	30% of TMC
Operating Labor Rate	=	$10.30/Hr
Indirect Costs (% of Direct Labor)		
Supervision	=	25%
General Plant Overhead	=	45%
Corporate Overhead	=	30%
Benefits	=	25%
Operating Supplies	=	5%
		130%

Notes:

1. TFCI = Total Facilities Construction Investment.
2. DFCI = Direct Facilities Construction Investment.
3. PC = Project Contingency.
4. Direct Labor Cost is the sum of Operating Labor Cost plus In-House Maintenance Labor Cost.
5. TMC = Total Maintenance Cost.

The economic parameters used to calculate the levelized constant dollar cost-of-gas are given below. These parameters were based on the GRI guidelines (1), but modified to eliminate investment tax credits and accelerated cost recovery schedule.

Book Life, Years	30
Tax Life, Years	30
Inflation Rate	0.06
Fuel Inflation	0.072
Base Year	1985
Construction Period, Years	4
Combined State and Federal Tax Rate	0.5
Service Factor	0.9
Debt/Common Equity	0.5/0.5
Average Cost of Capital	0.1185
Rate of Return on AFUDC	0.1185

7.2 Annual Operating and Maintenance Costs

Annual operating and maintenance costs for the integrated coal-based SNG plant designs, based on the conventional catalytic conversion of syngas and on the bioconversion of syngas, are shown in Table 7.1. These annual costs are based on a stream factor of 100%.

7.3 Levelized SNG Cost

Levelized constant-dollar cost of SNG produced by means of conventional catalytic conversion and bioconversion of syngas are shown in Table 7.2. The higher capital cost and higher variable operating and maintenance cost for the bioconversion route results in 8% higher cost of SNG.

7.4 Effect of Purchased Acetic Acid

The use of R. rubrum for the bioconversion of syngas to methane requires a carbon source other than CO and CO_2. For this reason, a small amount of acetate is added to the reaction medium. The required acetate can be conveniently produced from CO and water using the microorganism P. productus.

For the integrated SNG plant employing the bioconversion route, 6,880 pounds per hour of acetic acid is consumed for growth of R. rubrum. The estimated facility construction investment required to produce this amount of acetic acid via in-plant bioconversion is $9.0 million. This investment requirement and the gas used for acetate production can be eliminated if purchased acetic acid is used. The cost of acetic acid delivered in tank trucks, in mid-1985 dollars, is about 25¢ per pound.

TABLE 7.1

OPERATING AND MAINTENANCE COSTS

Nominal 125 Billion Btu/Day Coal-to-SNG Facility

	$MM Mid-1985	
	Conventional Route	Bioconversion Route
Coal Cost, First Year	99.4	110.6
Limestone	-	1.5
Solid Waste Disposal	0.8	1.0
Catalysts & Chemicals	5.2	-
Raw Water	1.2	2.0
Operating Labor	6.6	6.6
Maintenance:		
In-house Labor	6.4	6.8
Materials	8.5	8.9
Contract	6.4	6.8
Overhead:		
Benefits	3.3	3.4
Supervision	3.3	3.3
General Plant	5.9	6.0
Corporate	3.9	4.0
Supplies	0.7	0.7
Local Taxes & Insurance	12.1	12.8
Variable Operating & Maintenance Costs	64.3	64.6
Total Annual Operating Cost*	163.7	175.2
By-Product Credits:		
Sulfur	5.8	5.4
Ammonia	1.6	1.2
Total*	7.4	6.6

* At 100% stream factor.

TABLE 7.2

LEVELIZED CONSTANT-DOLLAR COST-OF-GAS

Nominal 125 Billion Btu/Day Coal-to-SNG Facility

	$/MMBTU Mid-1985	
	Conventional Route	Bioconversion Route
Capital Related Cost	2.35	2.48
Levelized Variable O&M Cost	1.57	1.60
Levelized Coal Cost	2.61	2.95
Levelized By-product Credit	(0.16)	(0.15)
Levelized Working Capital	0.18	0.20
Levelized Constant-Dollar Cost-of-Gas	6.55	7.08

Hence, the annual cost of purchasing the required amount of acetic acid will amount to $15.0 million. The purchased acetic acid cost can be reduced by the credit for additional fuel gas production, which is estimated to have a value of $2.7 million. Even with this fuel gas credit, there is still good reason to produce the required acetic acid internally instead of purchasing acetic acid. Only when the delivered cost of acetic acid is less than 20¢ per pound will the annual purchase cost equal the investment cost less product gas credit.

7.5 Effect of SNG Product Specification

The SNG produced in the integrated bioconversion SNG plant, as described in Section 6.0 of this report, is fully interchangeable with the referenced natural gas given in the GRI guidelines (1). The calculated interchangeability index values for this SNG are given below along with the limiting AGA indices:

Index	Calculated Value	Limiting Value
Lifting	1.015	1.06 max.
Flashback	1.053	1.20 max.
Yellow Tip	1.138	0.80 min.

The product SNG also meets all the GRI guideline specifications with the exception of CO content where the specification is 0.1 volume percent while the product gas contains nearly 1.3 volume percent. CO content in the product SNG can be reduced to 0.1% by the addition of a single stage catalytic trim methanation unit downstream of the acid gas removal unit. The trim methanation unit must be followed by gas drying to reduce the moisture content to the specification level of 7 pounds per million standard cubic feet. The dried SNG product gas is then compressed to 1000 psig. The process flow diagram for such a trim methanation unit as well as how this unit fits into the overall integrated bioconversion SNG plant is shown in Figure 7.1. The increase in investment to reduce the CO content of the product SNG to the specification level is estimated to be $10.0 million. In addition to the increase in plant cost, the operating costs will also increase to cool the methanated gas, to supply utilities for the gas drying unit, and to compensate for the lower suction pressure at the product SNG compressor.

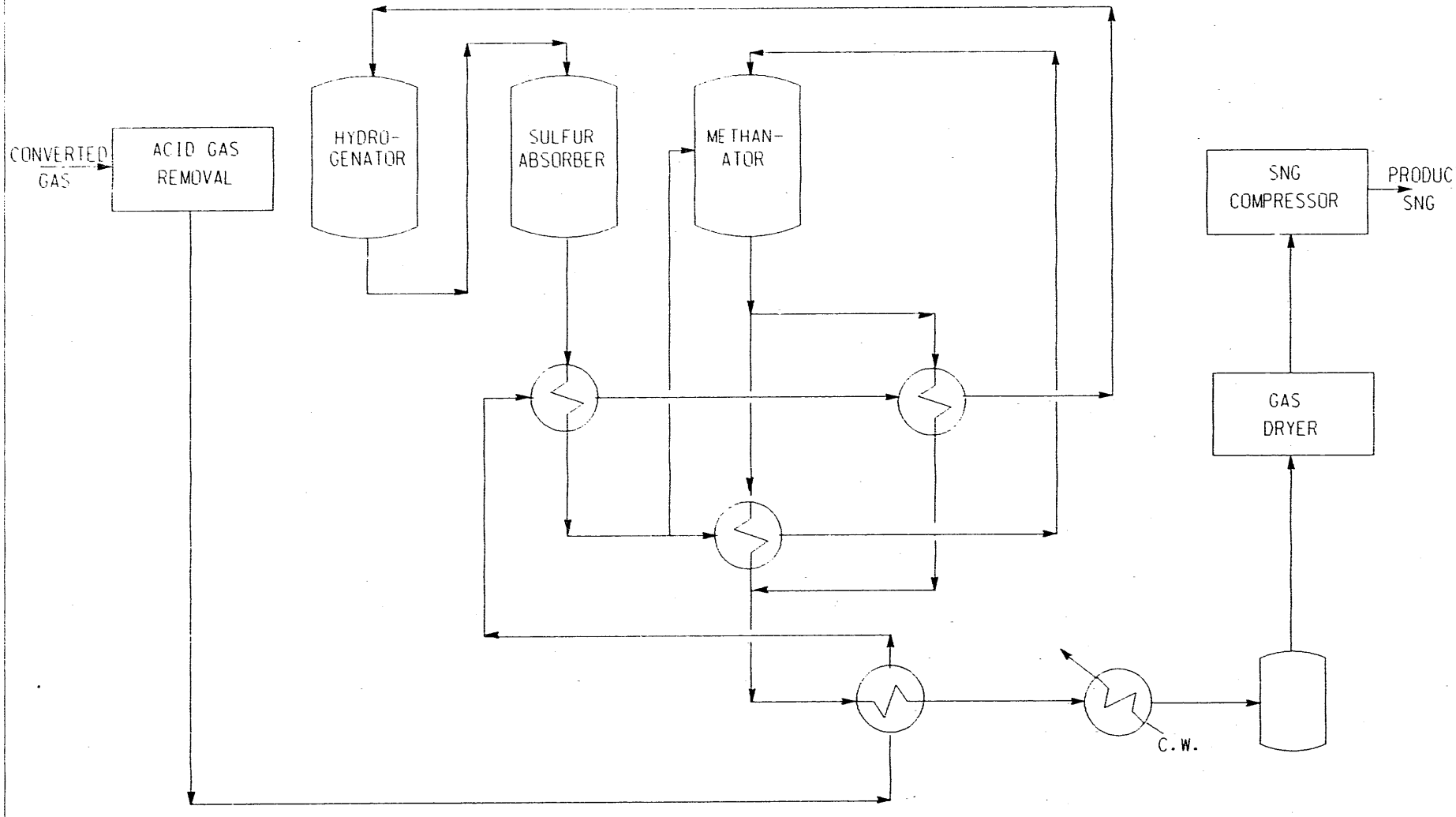

FIGURE 7.1
TRIM METHANATION & GAS DRYING UNIT
INTEGRATED BIOCONVERSION SNG PLANT

C:\DGN\TRIM.DGN Sep. 19, 1990 12:38:40

8.0 CONCLUSIONS AND RECOMMENDATIONS

8.1 Bioconversion for SNG Production

Bioconversion of coal-derived syngas for SNG production, based on the conceptual design developed in this study, indicates that the capital requirement as well as the variable operating and maintenance costs are higher than that for the conventional coal-based SNG plant. The onsite capital requirement based on bioconversion is higher than that of the conventional catalytic route. This difference is essentially due to the bioconversion unit which is nearly $41 million more than the catalytic methanation unit. The greatest impact of the bioconversion unit cost is in the cost of the shift/methanation subsystem which has been estimated to cost $7.0 million per train, for ten parallel trains. In this subsystem, feed gas to each train is processed through five stages of packed bed reactor. Reduction in the number of stages can reduce the cost per train but at a penalty of lower CO conversion. For example, if 90% CO conversion is acceptable versus 99.2% conversion for the present design, the cost per train could be reduced to approximately $5.75 million. This indicates that even at 90% CO conversion the shift/methanation subsystem, and hence the bioconversion plant, will still cost more than the conventional catalytic conversion plant.

Bioconversion is carried out at near ambient temperatures (90-100°F) and, therefore, exothermic heat of reaction must also be removed at these low temperatures. Heat at this temperature level cannot be conveniently recovered as useful energy. In this conceptual design, reaction heat is not recovered and is rejected to cooling water. However, conventional catalytic conversion is carried out at temperatures ranging from 450 to 900°F and, under these conditions, heat recovery by steam generation is possible. For this reason the bioconversion plant requires a normally operating steam generator. For this study a limestone injected circulating fluidized-bed boiler with bag house and stack for flue gas handling has been included. This results in higher offsite facilities investment cost for the bioconversion plant.

The present biological conversion system design is focused on the shift and methanation reactions only. Potentially, the economics for the bioconversion route to SNG could be improved with simultaneous biological conversion of sulfur compounds in the synthesis gas. Costs for the acid gas removal unit would be dramatically reduced and the need for sulfur recovery and tail gas treating units could possibly be eliminated. Microorganisms do exist that can consume and remove sulfur compounds, such as H_2S and COS. Addition research is needed, however, to determine the optimum organism or mixed culture that can be used for sulfur removal.

In terms of operating cost, the loss of reaction heat in the bioconversion plant results in a heavy penalty in coal feed requirement. Additional coal, needed for steam generation, amounts to $10.2 million per year over the catalytic conversion plant. This is the principal reason for the higher annual operating cost for the bioconversion plant.

The biological shift/methanation system as is presently designed was based on a specific strain of R. rubrum, cell concentrations of 120 gm/liter, and a medium temperature rise of 10°F. These are believed to be reasonable values. It is anticipated that if a more virile strain of R. rubrum can be developed and proven to be effective, higher cell concentrations such as 300 gm/liter and higher medium temperature rise such as 15 to 20°F can be used and the number of parallel reactor vessels can be greatly reduced. The University of Arkansas indicates that it may be possible to reduce the number of parallel reactors from ten to two with these changes. These changes could reduce the process facility construction investment to favor the bioconversion route.

The shift methanation reactor can also be designed with cooling coils in each packed section so that reaction heat removal will not entirely be dependent on medium circulation. This could reduce the number of parallel reactors required but will increase the cost of the reactor.

Although it is concluded that bioconversion of coal-derived syngas to SNG is not yet competitive based on this conceptual design study, several areas have been identified for further study to narrow the gap. The areas recommended for future R&D effort include:

- Simultaneous sulfur removal.
- More virile strain of microorganisms for shift conversion.
- Improved reactor design to allow for more efficient heat removal.

While bioconversion of syngas is not likely to be competitive with catalytic conversion to produce SNG from coal, there could be a niche for bioconversion in the production of higher valued products, such as acetic acid. Catalytic conversion of syngas to acetic acid requires the production of methanol followed by methanol carboxylation. This is a complicated two step process compared to bioconversion for acetic acid production as is practiced in this study.

8.2 Bioconversion for Hydrogen Production

The selected bioconversion process can also be used to produce hydrogen. The only change required is to eliminate the M. formicicum culture in the mixed culture reactors for shift/methanation. Since the absorption of CO into the medium solution is the controlling resistance in the shift/methanation reaction system, it is expected that the cost of the shift reaction system for hydrogen production will be identical to that for the shift/methanation reaction system. The investment cost and operating cost for hydrogen production is expected to increase slightly due to the increased CO_2 removal requirement.

9.0 LITERATURE REFERENCES

(1) GRI-83/0003, "Guidelines for Evaluation of Commercial Fossil Fuel Gasification Concepts - 1986 Revision" by F. M. Floyd and R. E. Dillon (March 1986).

(2) GRI-87/0160, Topical Report "Design and Economics of Plants to Convert Eastern Bituminous Coal to Methane Using KRW Gasifiers", Fluor Technology Inc. (January 1987).

(3) Advanced Studies of the Biological Conversion of Coal Synthesis Gas to Methane, Topical Report on Task 5 - Mass Transfer and Kinetic Studies, University of Arkansas, March 1989, DOE Contract No. DE-AC21-86MC23281.

(4) Advanced Studies of the Biological Conversion of Coal Synthesis Gas to Methane, Draft Final Report, University of Arkansas, November 1989, DOE Contract No. DE-AC21-86MC23281.

(5) Advanced Studies of the Biological Conversion of Coal Synthesis Gas to Methane, Topical Report Task 7: Economic Evaluation, University of Arkansas, January 1990, DOE Contract No. DE-AC21-86MC23281.

END

DATE FILMED

02 / 20 / 91