By acceptance of this article, the publisher or recipient acknowledges the U.S. Government's right to retain a nonexclusive, royalty-free license in and to any copyright covering the article.

CONF-8510248--1

DE86 003092

R.
CONF-8510248--1

SUPERCONDUCTING MAGNET RESEARCH AND DEVELOPMENT PROGRAM

Presented by

J. W. Lue

Oak Ridge National Laboratory

*Research sponsored by the Office of Fusion Energy, U.S. Department of Energy, under contract DE-AC05-84OR21400 with Martin Marietta Energy Systems, Incorporated.

Second US/Japan Exchange Workshop on
"Superconducting Magnet Requirements for Long-Pulse Tokamaks"
October 29-November 1, 1985
Tokai, Japan

DISTRIBUTION OF THIS DOCUMENT IS UNLIMITED

PURPOSE

- Develop workable and reliable superconducting magnets for fusion reactors
- Support the design, construction, testing and evaluation of LCP test coils and facility
- Develop higher performance magnets with greater reliability
  - a) higher current density
  - b) higher field
  - c) higher heat removal capability

DISCLAIMER

This report was prepared as an account of work sponsored by an agency of the United States Government. Neither the United States Government nor any agency thereof, nor any of their employees, makes any warranty, express or implied, or assumes any legal liability or responsibility for the accuracy, completeness, or usefulness of any information, apparatus, product, or process disclosed, or represents that its use would not infringe privately owned rights. Reference herein to any specific commercial product, process, or service by trade name, trademark, manufacturer, or otherwise does not necessarily constitute or imply its endorsement, recommendation, or favoring by the United States Government or any agency thereof. The views and opinions of authors expressed herein do not necessarily state or reflect those of the United States Government or any agency thereof.

SCOPE

- Advanced conductor R&D
- Magnet technology
- Cryogenics
- Instrumentation and diagnostics
- Structural analysis
- Pulse coils
- 12-T program
- LCP R&D activities

SOME NOTABLE TECHNICAL PROGRESS

- R&D of Cable-in-Conduit Internally-Cooled Superconductors (ICS)
- EBT-P Magnets: Design, Construction, and Test
- Tests of Westinghouse/Airco Nb_3Sn Conductors
- Partial-Array Test in IFSMTF
- Evaluation of Pressure Taps on Westinghouse Conductor Sheath
- IFSMTF Vapor-Cooled-Lead Tests

R&D of ICS

- Stability Experiments - Multiple Stability
- Phenomenological Theory - Scaling Laws for Limiting Current
- Parametric Studies: B, ℓ, τ, v
- NbTi ICS-Magnet
- Extended Operation of an ICS Magnet
- Quench Simulation Studies
- ICS Cooled by He-II

SIGNIFICANT ACHIEVEMENTS OF EBT-P MAGNET DEVELOPMENT WORK

- Different types of NbTi superconductors used: compacted bundle, uniformly distributed monolith, bare or Ebanol-C coated
- High current density: 10 kA/cm^2 over winding cavity at 7.4 T on conductor
- Layer-cake winding scheme
- Individual close-fitting dewar – room-temperature bore
- Ripple current induced heating test
- No quenching or training during normal operation throughout the entire test program
- Two-coil test: side-by-side 60 cm aprt, 0.32 MN out-of-plane load at 5.1 T proved mechanical integrity of the design

1

2

3

ORNL–DWG 85-3238 FED

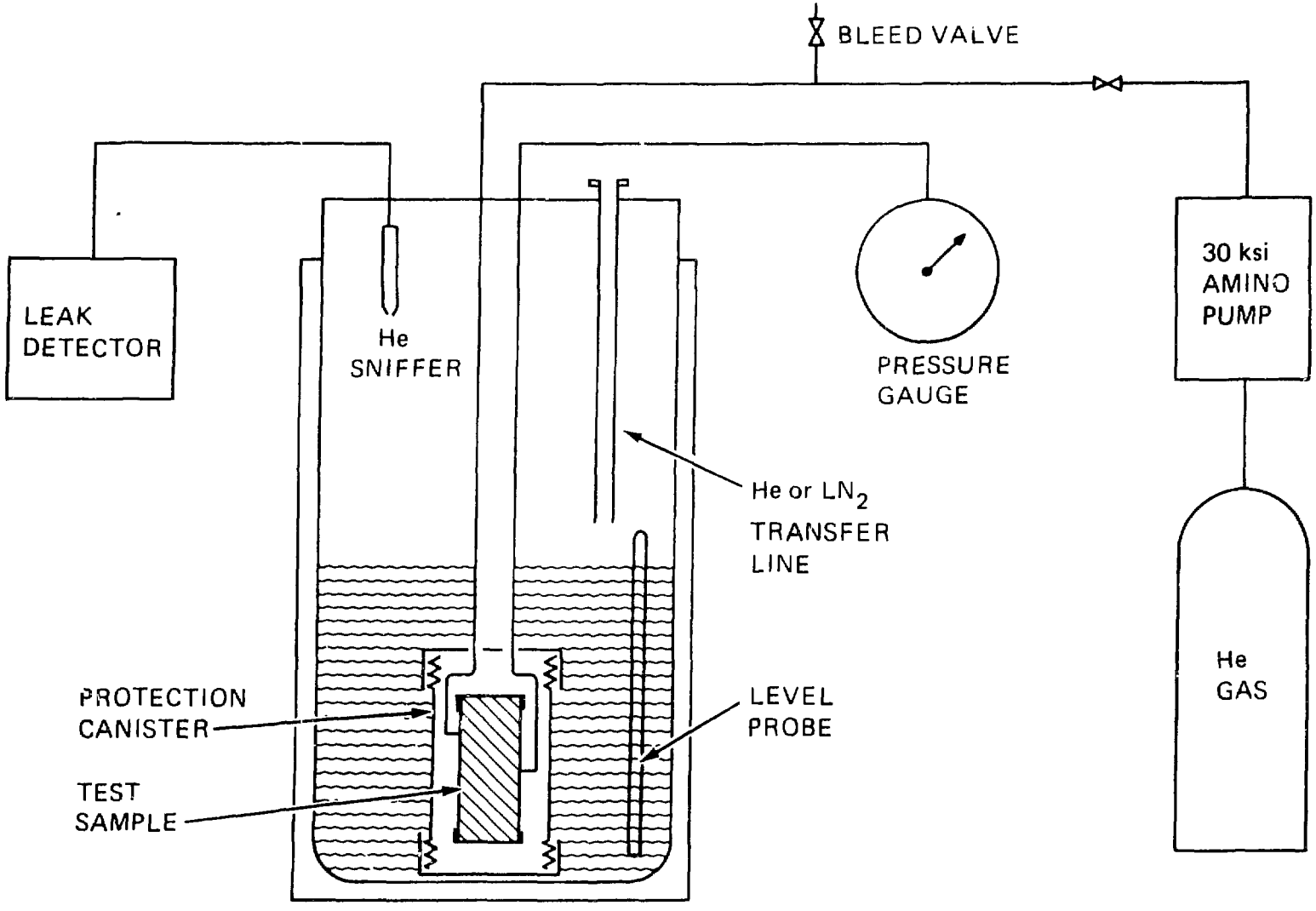

PRESSURE TAPS TEST RESULTS

Test Sequence	Sample: Brazed Tube and Button	Tack Welded Tube, Brazed Tube and Button	Welded Tube Stub without Button
1. LN_2 temperature plus	OK to 8,000 psi	OK to 8,000 psi	OK to 8,000 psi
2. LHe temperature plus	OK to 26,400 psi[a]	OK to 24,000 psi[a]	OK to 26,750 psi[a]
3. Room or LN_2 temperature plus	One tube-to-button braze cracked at 13,700 psi at LN	One button-to-sheath braze cracked at 10,000-12,000 psi at RT	One tube-cap braze leaked at 10,000-11,000 psi at RT
4. LHe temperature plus	Samples simultaneously cycled 45 times to 15,000 psi,[a] plus 20 times to 20,000 psi,[a] plus 5 times to 24,000 psi[a]		
5. LN_2 temperature			8 cycles to 3200 psi +8 cycles to 6000 psi +4 cycles to 9000 psi +4 cycles to 12,000 psi +1 cycle to 15,000 psi. Ruptured violently at ≈16,000 psi on last cycle.

[a]Pressure read at warm end of supply tube. Sample pressure is assumed to be the 4.2-K freezing pressure of He, ≈2080 psi.

ORNL-DWG 85-3252 FED

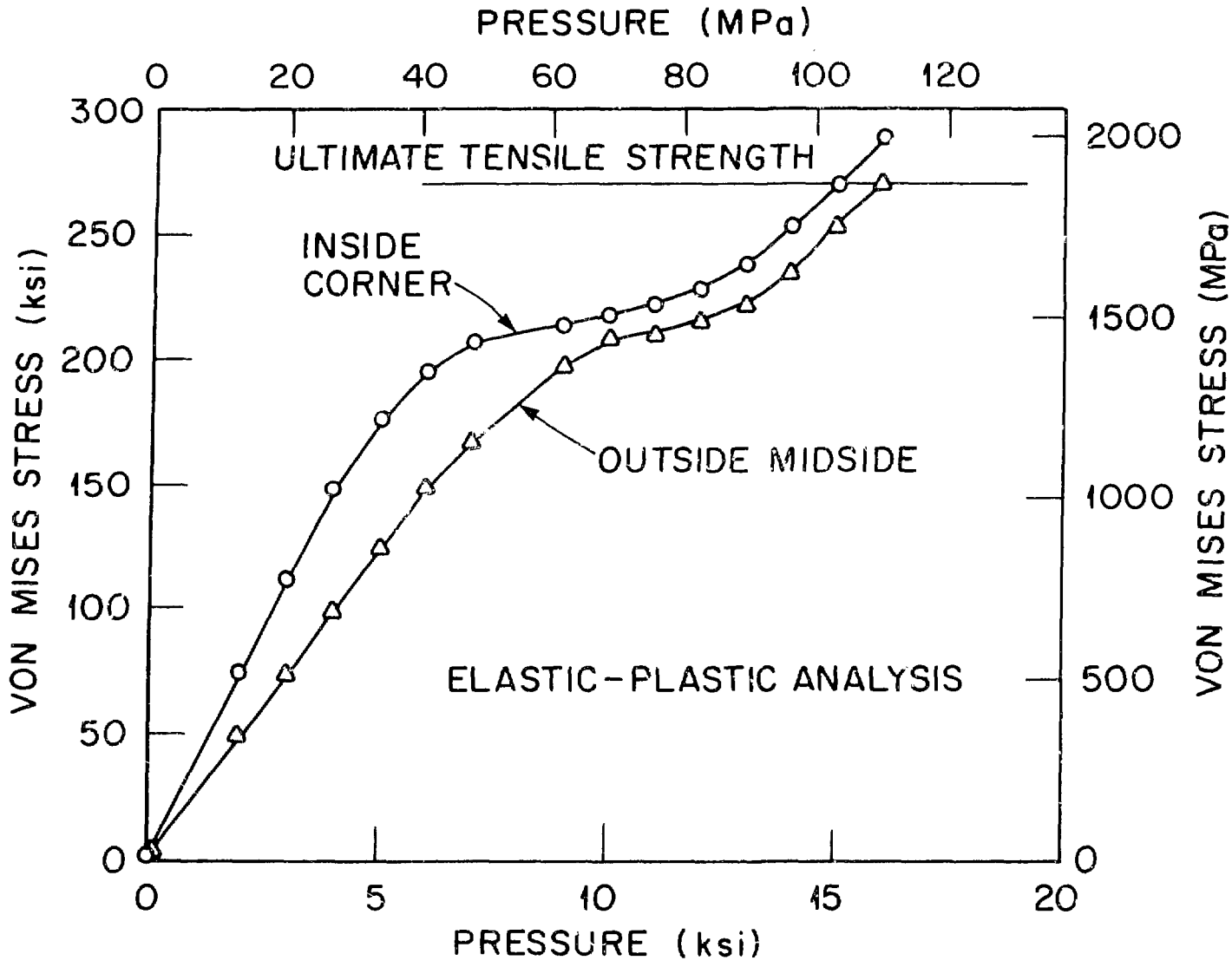

ORNL-DWG 85-3072 FED

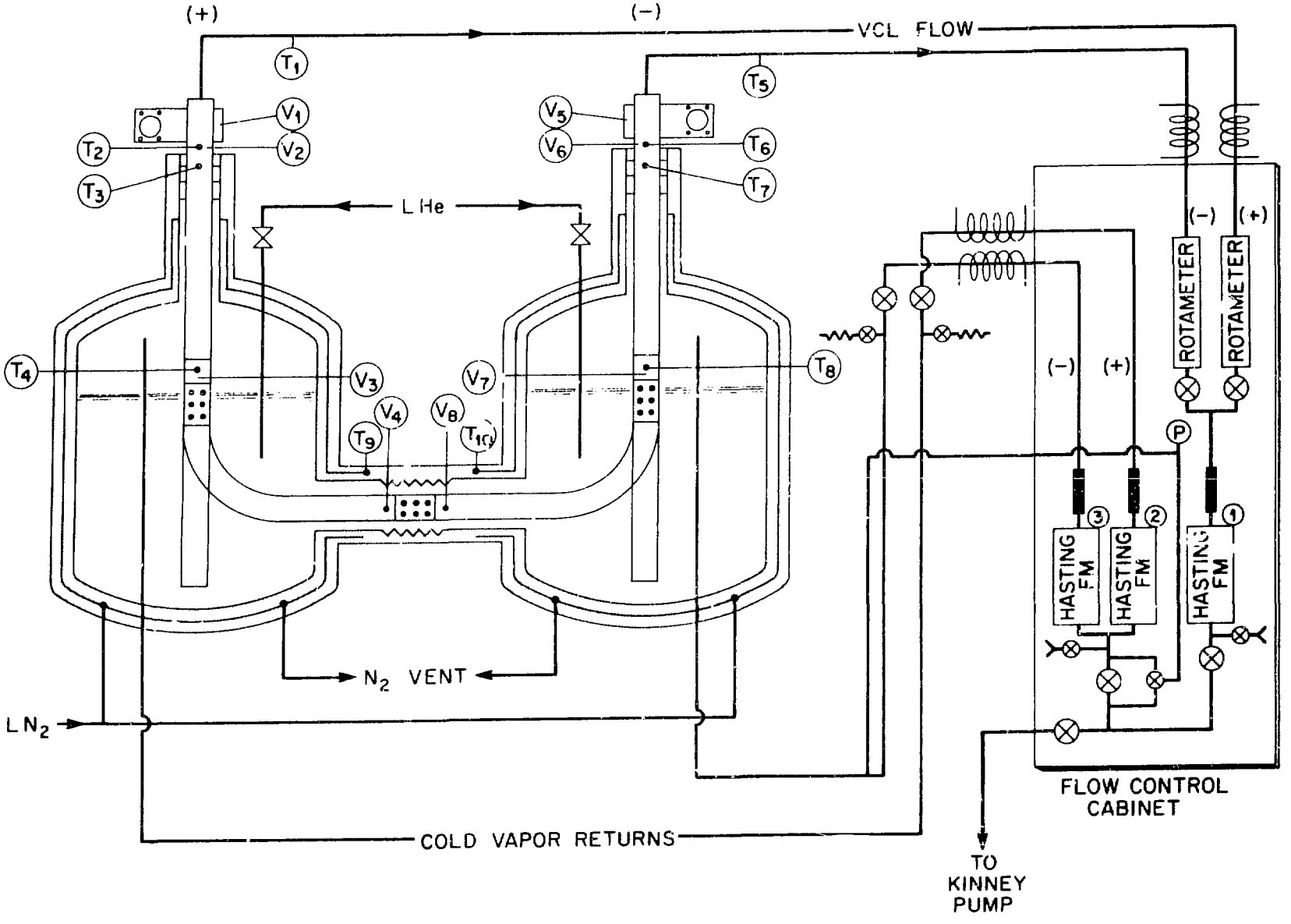

ORNL-DWG 85-3074 FED

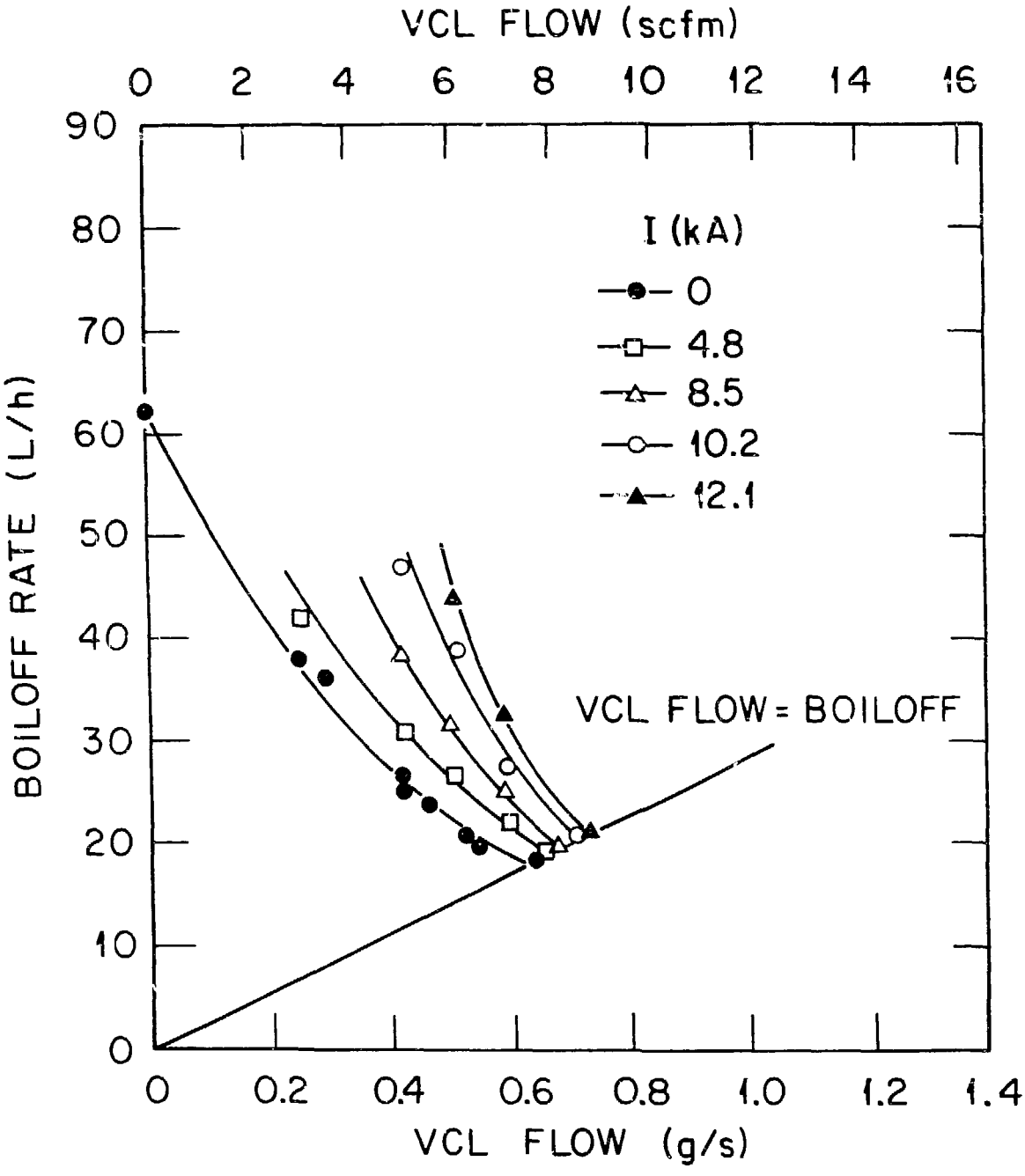

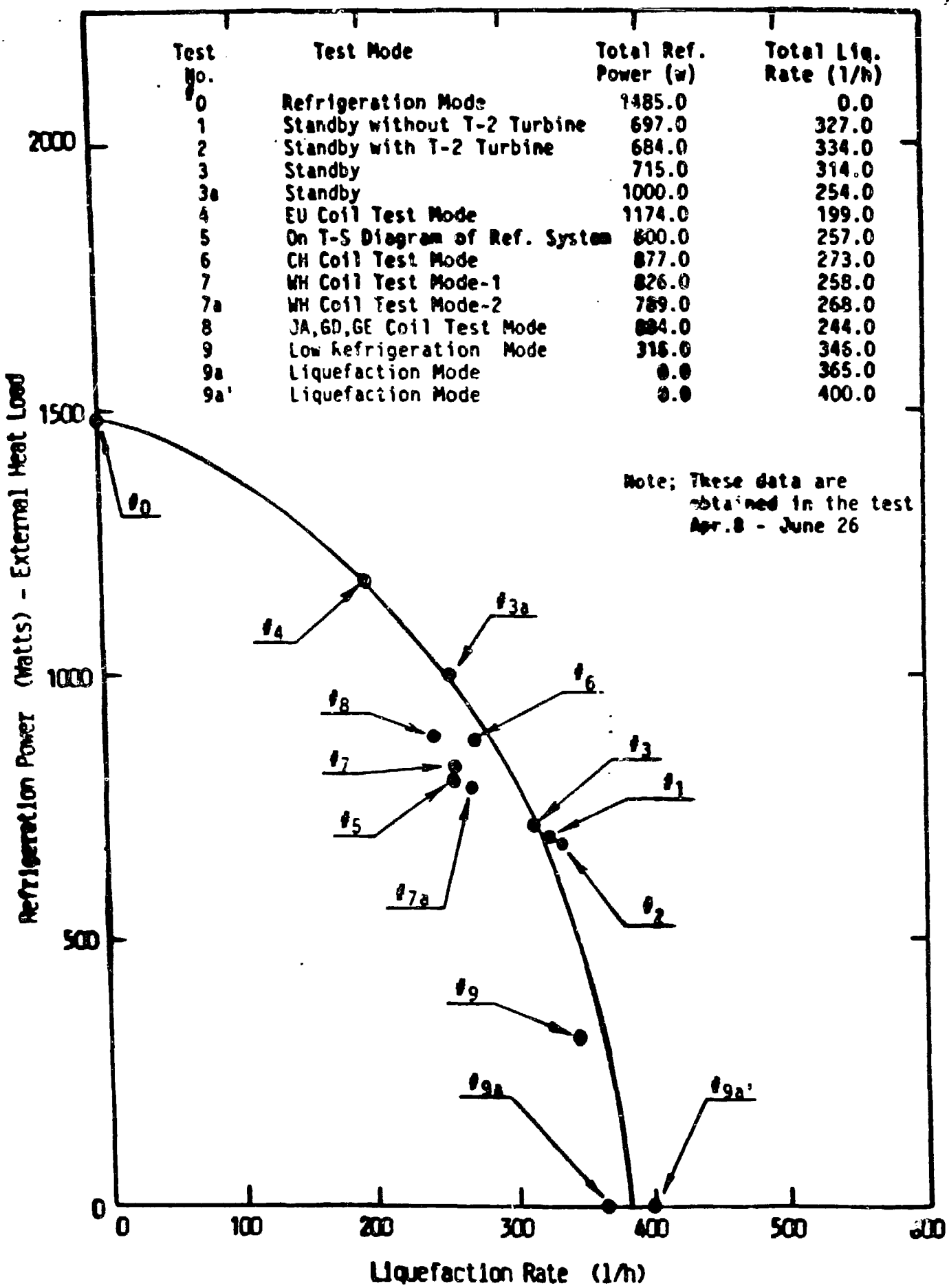

Fig.1 Refrigeration Power vs. Liquefaction Rate of Existing Refrigerator

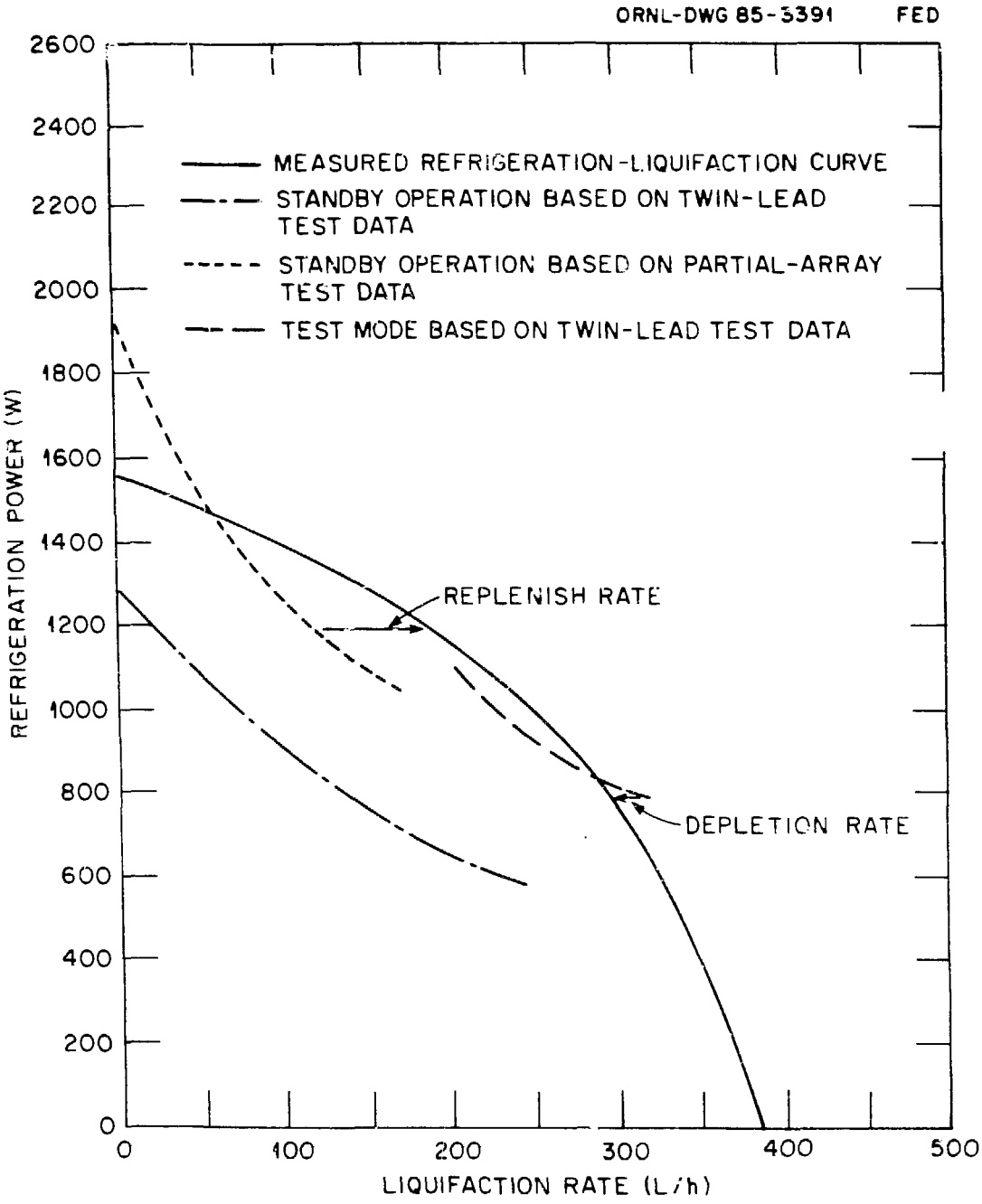
ORNL-DWG 85-3391 FED
MEASURED REFRIGERATION-LIQUIFACTION CURVE
STANDBY OPERATION BASED ON TWIN-LEAD TEST DATA
STANDBY OPERATION BASED ON PARTIAL-ARRAY TEST DATA
TEST MODE BASED ON TWIN-LEAD TEST DATA
REPLENISH RATE
DEPLETION RATE
REFRIGERATION POWER (W)
LIQUIFACTION RATE (L/h)
0
200
400
600
800
1000
1200
1400
1600
1800
2000
2200
2400
2600
0
100
200
300
400
500

ORNL-DWG 85-3401 FED

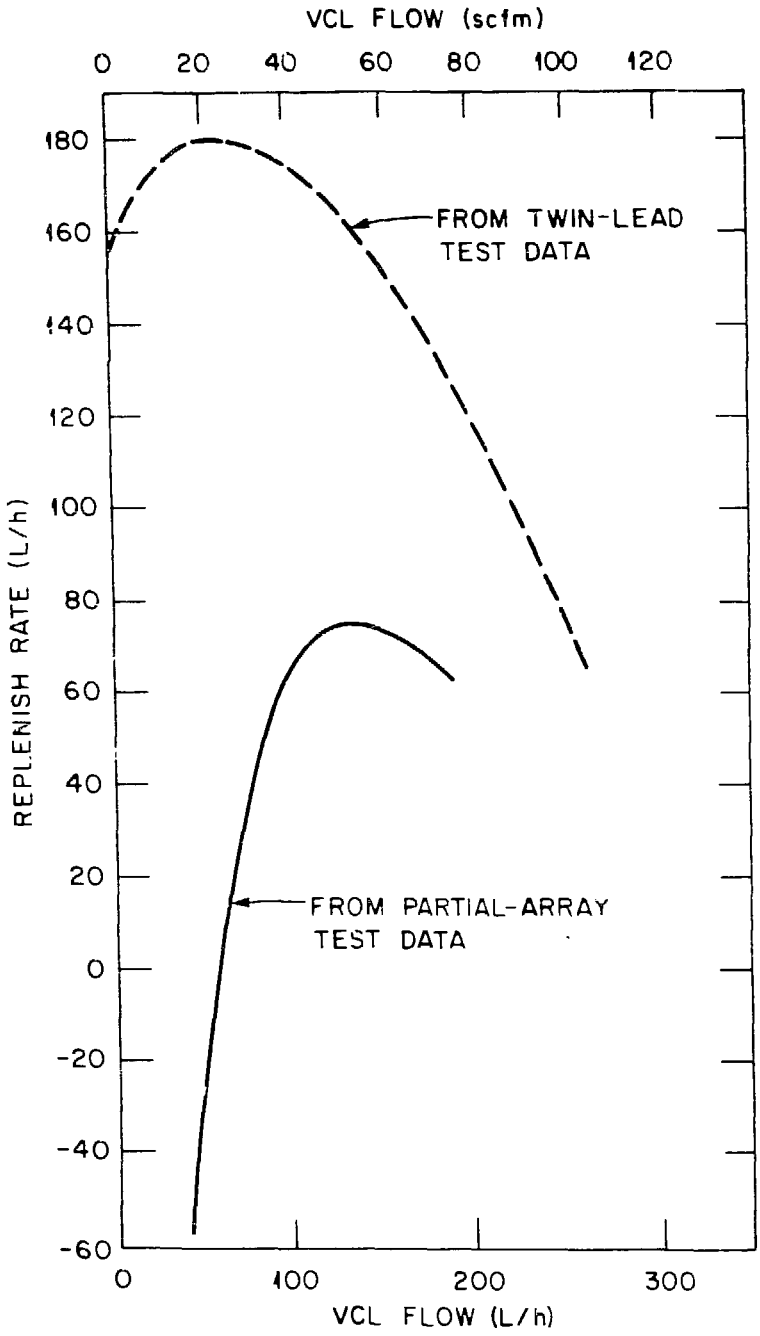

FUTURE PLANS

- Test of 12-T conductors: e.g., 4.8 x 1.1 cm Nb_3Sn Cable

  $I_c \approx 24$ kA at 12 T

- Stability of ICS Conductors: additional parameteric studies, current density limits

- Pulse Field Experiments: mixed matrix ICS

- Copper Jacketed Cable + Reaction + Structural Jacket Nb_3SN ICS

- Demountable Vapor-Cooled Leads: mechanical or thermal breaks

- Large Segment Tests in IFSMTF: cluster, interstitial, or insert

ORNL-DWG 85-3390 FED

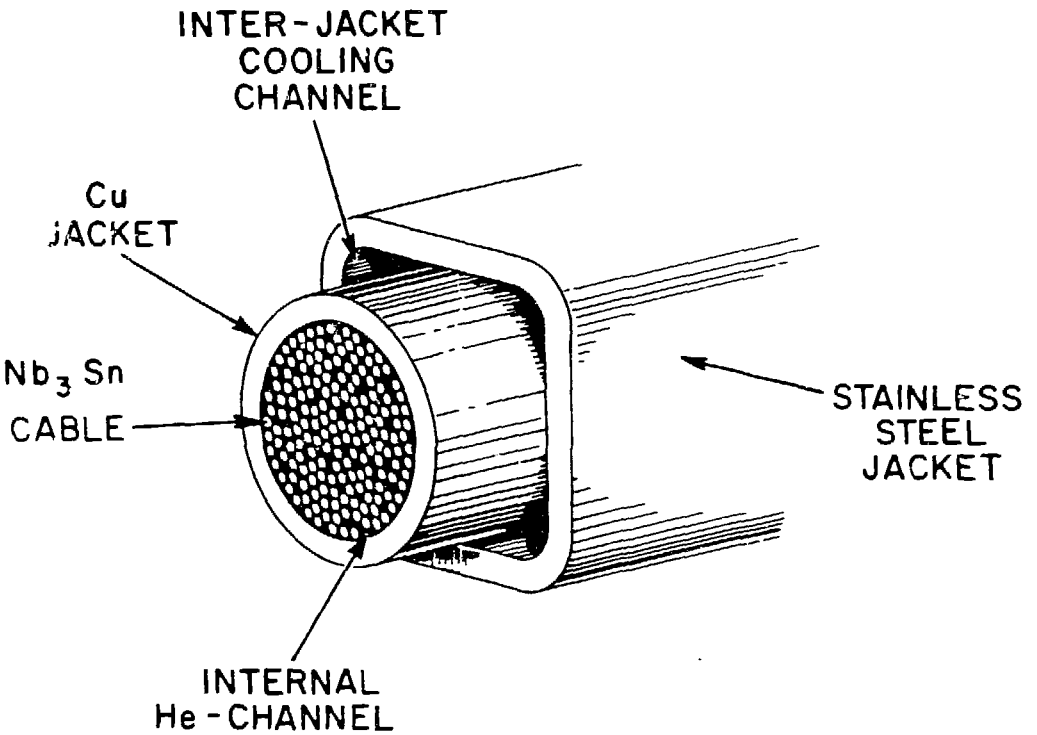

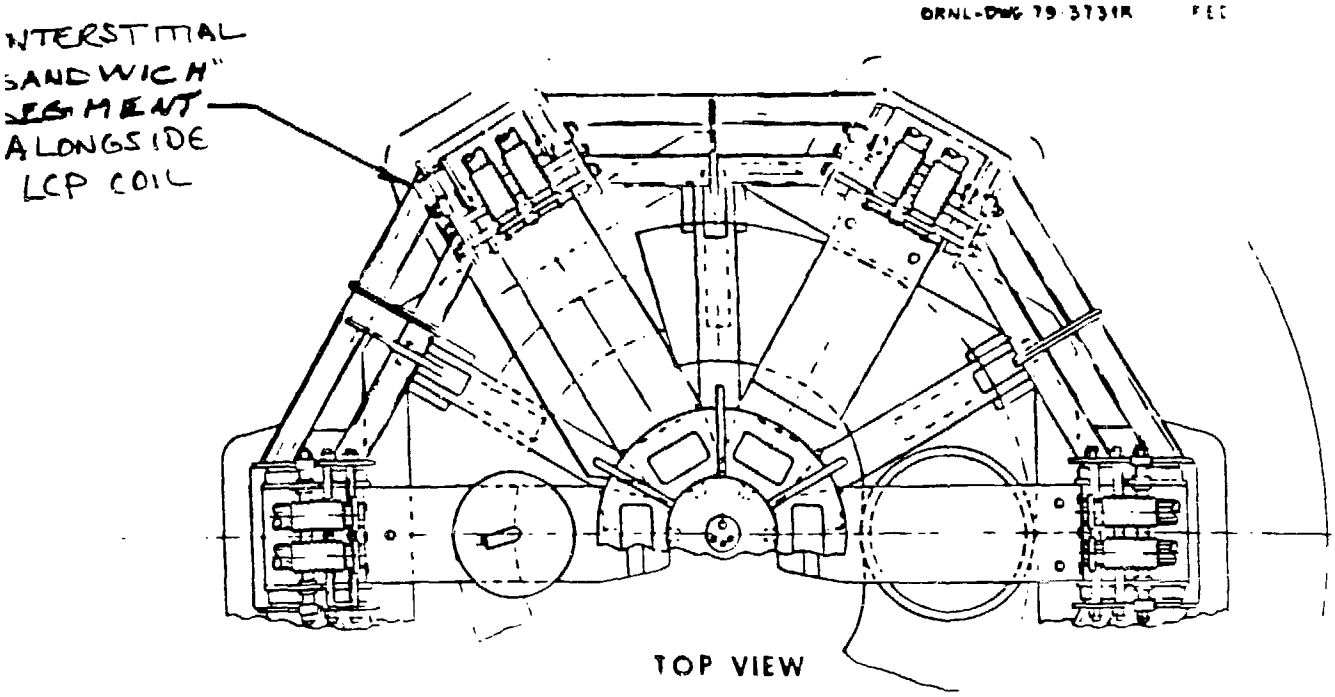

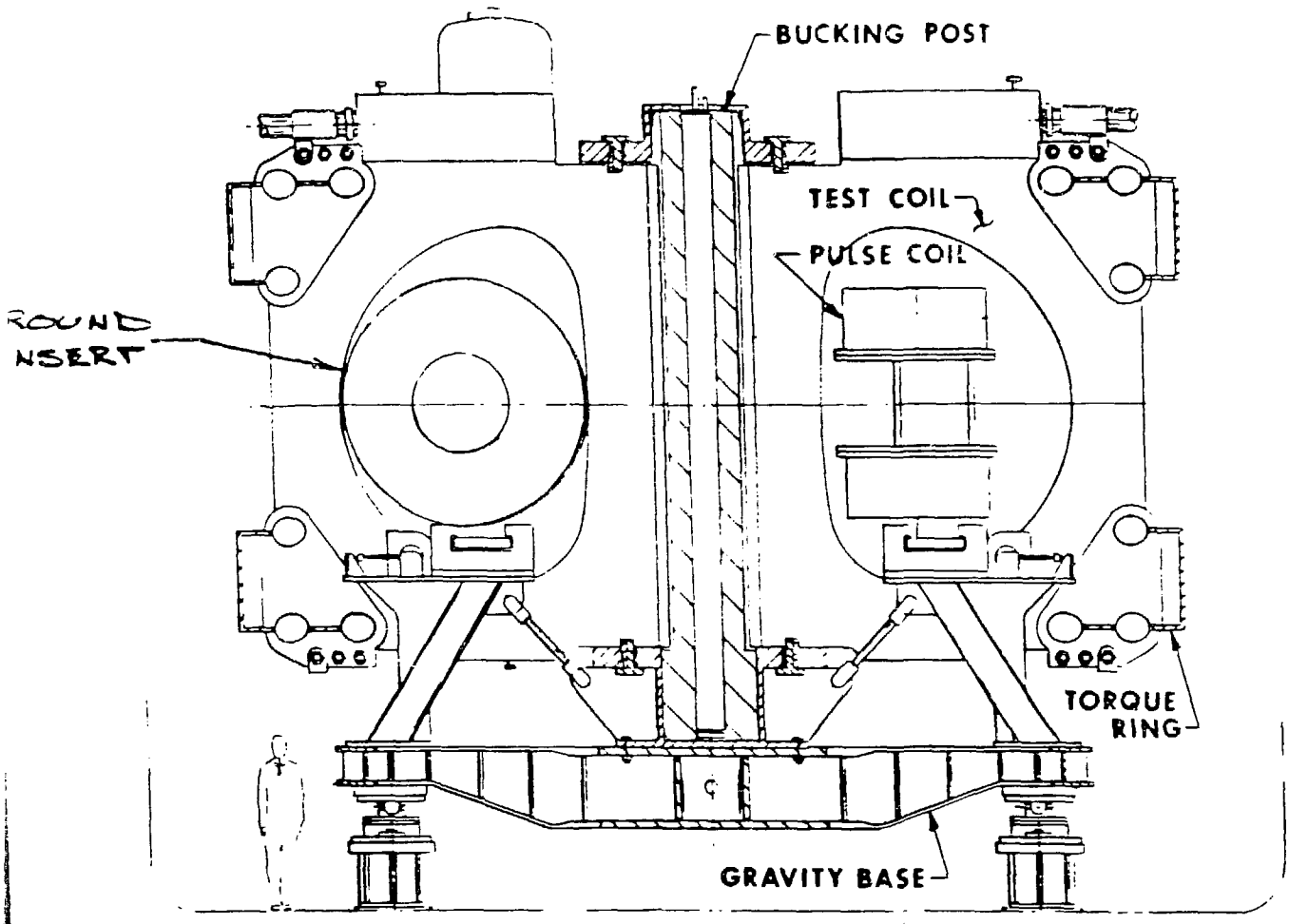

ELEVATION VIEW
TEST STAND ASSEMBLY

Fig. 1