Conf-9009309--12
BNL-45843

OG 1145

Presented at the Rheinfels Workshop on Hadron Mass Spectrum
St. Goar on the Rhine, Germany, Sept. 3-6, 1990

BNL--45843

DE91 009449

SEARCH FOR THE U(3.1)— $\bar{\Lambda}p\pi$'s FROM $\bar{p}p$ INTERACTIONS AT 8 GeV/c

A. BOEHNLEIN, D. BOEHNLEIN, J.H. GOLDMAN and V. HAGOPIAN
Florida State University, Tallahassee, Fl. 32306

S.U. CHUNG, R. FERNOW, H. KIRK, S.D. PROTOPOPESCU and H.J. WILLUTZKI
Brookhaven National Laboratory, Upton, N.Y. 11973

S. BLESSING, R. CRITTENDEN, A. DZIERBA and D. ZIEMINSKA
Indiana University, Bloomington, In. 47405

B. BONNER, J. CLEMENT, N. KRISHNA and G. MUTCHLER
Rice University, Houston, Texas 77251

Z. BAR-YAM, J. DOWD, W. KERN, E. KING and P. RULON 3
Southeastern Massachusetts University, N. Dartmouth, Ma. 02747

(Presented by Vasken Hagopian)

MAR 2 0 1991

A search for the U(3.1) resonance decaying into $\bar{\Lambda}p\pi$'s final states has been performed with negative results. The cross section upper limits are between 10 and 25 nanobarns. These cross sections are one or two order of magnitude lower than expected from previous results. Mass spectra of various final states are presented.

1. INTRODUCTION

A CERN experiment (WA62)[1] with a 135 GeV/c $\Sigma^- + Be$ has reported a narrow U(3.1) resonance at about 3.1 GeV/c^2 that decays into $\Lambda\bar{p}\pi$'s with charge states of −1, 0 and +1. Since the final state is a meson with isospin of at least 1 and has strangeness of +1, it cannot be $q\bar{q}$. The BIS-2 collaboration[2] also reported the observation of the U(3.1) in +2, +1, 0, -1 and -2 charge states produced in neutron-nucleus interactions at a mean beam momentum of about 40 GeV/c. To produce these five charged states requires at least $qq\bar{q}\bar{q}$, with one strange quark. The CERN experiment reported cross sections of 1 to 5 mb per Be nucleus while the BIS-2 experiment cross sections were about 1 mb per nucleon. This experiment presents results for the final state of $\bar{\Lambda}p\pi$'s in +2, +1 and 0 charge states. Preliminary results were reported at the Conference on Glueballs, Hybrids and Exotic Hadrons[3].

2. THE EXPERIMENT

This experiment (E771) with a 8 GeV/c $\bar{p}$ beam took data in 1987 using the BNL Multiparticle Spectrometer (MPS). The reaction of this experiment is

$$\bar{p}p \rightarrow \bar{\Lambda}p\pi\text{'s } X$$

$$\bar{\Lambda} \rightarrow \bar{p}\pi^+$$

with X, the missing particles, having at the least a K. The apparatus is shown in Figure 1. The trigger elements were the proportional wire chambers (PWC) P1, P2 and P3, the scintillator hodoscopes H1 and H2, and the Cherenkov counter C1. The MPS magnet had an average field of 0.5 Tesla. Data from the seven drift chamber modules, (DC 1-7), each with seven detection planes, were used off line to compute the momentum of the charged particles. The Target Box (TB) was not used in this portion of the experiment. Details of the experiment and trigger using an incident π^- beam are described in reference 4.

MASTER

DISTRIBUTION OF THIS DOCUMENT IS UNLIMITED

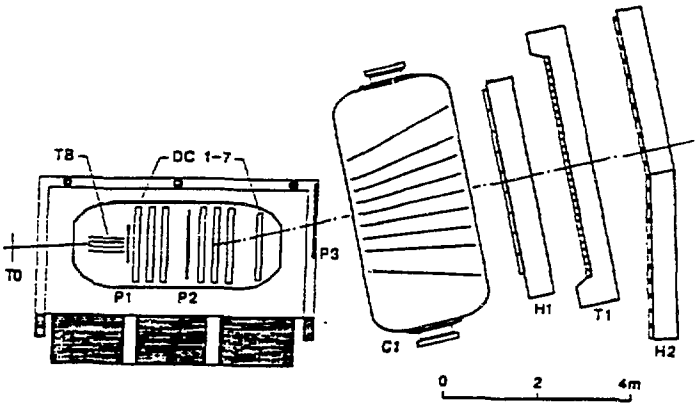

FIGURE 1

Brookhaven National Laboratory Multi-particle Spectrometer (MPS)

The trigger for this experiment had two components. The first part was a multiplicity requirement that two to five charged particles leave the 60 cm hydrogen target as determined by the PWC P1 and 4 to 5 charged particles reach the second PWC P2. This allowed neutral particles, such as $\bar{\Lambda}$ to decay either inside or outside of the target. The second part of the trigger required that at least one positive particle have a momentum greater than 1.5 GeV/c and be more massive than a pion. This was acomplished by using the PWC's P2, P3 and the scintillator hodoscope H2 to determine the momentum, and the segmented Cherenkov counter C1 in conjunction with hodoscope H1 to veto pions. This particle identification could not separate a K^+ from a proton. That was accomplished offline using data from the Time-of- Flight (TOF) system, which was composed of a start counter (T0) in the beam and the stop hodoscope T1, 10 meters downstream of the target. T1 was composed of 32 vertical scintillators, each 15 cm wide, 180 cm long and 5 cm thick.

During the reconstruction of the events, the program searched for neutral decays which were at least 5.0 cm downstream of the interaction point. Figure 2a shows the invariant mass of the V with $\bar{p}$ and π^+

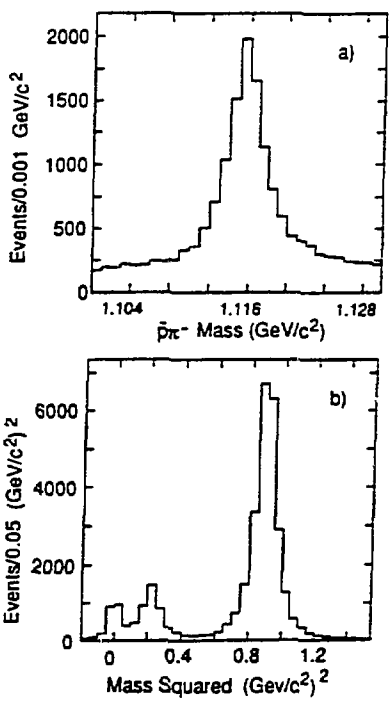

FIGURE 2

Mass distributions a) V mass b) Trigger particle mass from TOF and momentum.

mass assignments. The $\overline{\Lambda}$ peak is clearly seen at the correct mass. The TOF system measured the velocity of the fast positive charged particle, while the MPS measured the momentum. Figure 2b shows the mass spectrum, calculated from the velocity and momentum of the fast trigger particle. A cut in the square of the mass between 0.6 and 1.2 $(\mathrm{GeV}/c^2)^2$ selected protons with almost no background. The other charged particles associated with the interaction are assumed to be pions. After the $\overline{\Lambda}$ mass cut and TOF cut were applied there are 10,640 events. Combining with various π's, there are 4349 $\overline{\Lambda}p\pi^+$ events, 8049 $\overline{\Lambda}p\pi^-$ events and 1758 $\overline{\Lambda}p\pi^+\pi^-$ events. The $\overline{\Lambda}p\pi^+\pi^-$ events are a subsample of the other two event types.

3. THE DATA

The MPS has very good resolution due to the 49 measuring drift chamber planes. Figures 3 shows the $\overline{\Lambda}\pi^-$ mass plot, where the $\overline{\Sigma}$ (1385) is clearly observed. The accepted values for the width[5] of the Σ $(1385)^+$ is 36 MeV/c^2 which is approximately the width observed in figures 3. This peak verifies the excellent resolution of the equipment which is crucial in determining cross section upper limits.

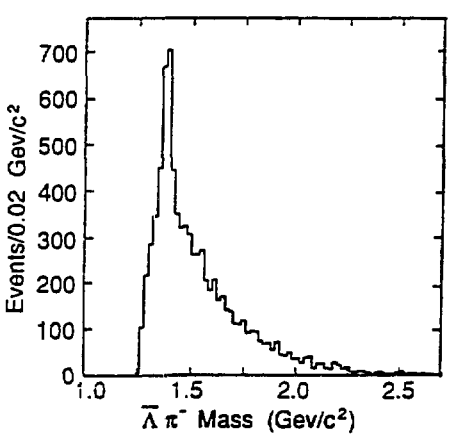

FIGURE 3
Two body mass distribution

Due to the trigger of this experiment, $\overline{\Lambda}p\pi$'s are detected. In the $\bar{p}p$ data, we look for the states:

$$\overline{U}^{++} \to \overline{\Lambda}p\pi^+,$$
$$\overline{U}^{0} \to \overline{\Lambda}p\pi^-, \text{ and}$$
$$\overline{U}^{+} \to \overline{\Lambda}p\pi^+\pi^-.$$

Figure 4 shows the $\overline{\Lambda}p\pi^+$, $\overline{\Lambda}p\pi^-$ and $\overline{\Lambda}p\pi^+\pi^-$ mass distributions. It is clear that the U(3.1) is not observed in any of the three charge states, i.e. $-+$, $+$ and 0. For the computation of upper limits on the cross sections,

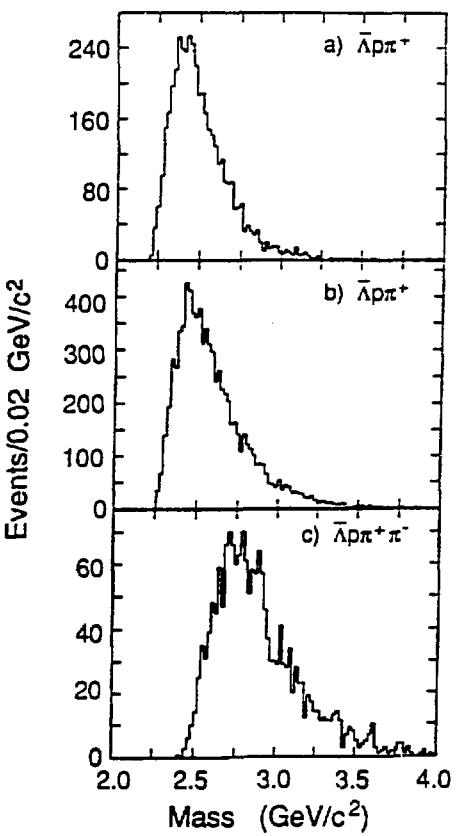

FIGURE 4
Invariant mass distributions

the width of the U(3.1) and the resolution of this experiment is required. The width (full width at half maximum) of the U(3.1) from the CERN data[1] is reported to be 24 MeV/c^2 and for the BIS experiment [2] we estimate it to be less than 40 MeV/c^2. The resolution of this experiment at the U(3.1) mass is about 25 MeV/c^2. However, since the true width of the resonance is unknown, we will calculate the upper limit using a conservative value of a total width of 40 MeV/c^2. The acceptances of the MPS for the three charged states were calculated using Monte Carlo program SAGE that generated events using constant phase space. Each charged particle was followed through the apparatus. The trigger requirements as well as the geometrical limits were applied to the Monte Carlo events. In addition various trigger, detector and software efficiencies were determined.

Table 1 lists the 90% confidence level upper limits for the number of events, acceptance and cross section for each U (3.1) state.

Table 1 Upper limit Cross Sections for $\overline{U}$.

Upper Limits for Cross Sections			
Final State	$\overline{U}$ Events (90% conf.)	Accept.	Cross Section
$\overline{U}^0 \to \overline{\Lambda}p\pi^-$	13	4.3 %	23 nb
$\overline{U}^{++} \to \overline{\Lambda}p\pi^+$	7	3.9 %	12 nb
$\overline{U}^- \to \overline{\Lambda}p\pi^-\pi^-$	12	5.1 %	17 nb

4. COMPARISON WITH OTHER EXPERIMENTS

The CERN collaboration[1] quotes cross section times branching ratio for the U states

$$\sigma \cdot BR(U^{++} \to \Lambda\bar{p}\pi^+\pi^+) = (4.8 \pm 1.4 \pm 0.8)\ \mu b$$
$$\sigma \cdot BR(U^0 \to \Lambda\bar{p}\pi^+\pi^-\pi^-) = (1.2 \pm 0.7 \pm 0.2)\ \mu b$$
$$\sigma \cdot BR(U^{--} \to \Lambda\bar{p}\pi^+\pi^-) = (3.0 \pm 1.7 \pm 0.5)\ \mu b$$

The Serpukhov collaboration at the BIS-2 spectrometer [2] reports U events in five charged states with either $\Lambda\bar{p}$ or $\bar{\Lambda}p$ in the final state. The experiment used a neutron beam with average energy of 40 GeV and maximum energy of 70 GeV. The targets were carbon, aluminium, and copper. The decay modes observed are: $\Lambda\bar{p}\pi^+$, $\bar{\Lambda}p\pi^-$, $\Lambda\bar{p}\pi^+\pi^-$, $\Lambda\bar{p}\pi^+\pi^+$, $\bar{\Lambda}p\pi^+\pi^-$, $\bar{\Lambda}p\pi^-\pi^-$, $\Lambda\bar{p}\pi^-$ and $\bar{\Lambda}p\pi^+$. The resonance seen in these channels has a mass of approximately 3060 MeV/c^2 and is less than 40 MeV/c^2 wide. The cross section times branching ratios for the various U(3.1) charged modes are reported to be approximately 1 μb per nucleon.

To compare our cross section limit to those presented by the CERN experiment, we had to make some adjustments. First, the difference in center of mass energy was taken into account. The J/ψ has mass of 3.1 GeV/c^2 and its cross section has been measured at many different energies [6]. Since the J/ψ is $c\bar{c}$, it should have a smaller cross section at low C.M. values than ordinary quarks. So using J/ψ cross section(s) is a very conservative estimate for the upper limit calculation. We have compiled the results of different measurements of the J/ψ cross section as a function of energy available to the final state. The energy available is the center-of-mass energy less the mass of the missing particles necessary to fulfill the conservation laws. In the CERN experiment, the initial state had a baryon number of 2. The U certainly is not a baryon so the missing mass must include two baryons. The baryon with the lowest mass is the proton. In the CERN experiment, E_{cm} = 16.00 GeV, thus the available energy is $\approx$ 14 GeV. In this experiment, the baryon number is zero in the initial and final states. However, there must be a strange particle in the missing mass to balance the antistrangeness of the $\bar{\Lambda}$. The minimum particle in this case is a K meson, since E_{cm} = 4.1 GeV, the total available energy is 3.6 GeV. Extrapolating, the J/ψ cross section to 3.6 GeV, the suppression factor is 250 compared to the J/ψ cross section at 14 GeV.

Additional factors need to be taken into account. The CERN data has a baryon-baryon initial state, while our data has a baryon-antibaryon initial state. The U final state has a baryon-antibaryon pair so at least one pair need be created out of the vaccum. In the CERN data, there is a strange quark in the initial state while in this experiment, an $s\bar{s}$ pair must be created out of the vacuum. We estimate that the CERN experiment will be supppressed by a factor of 10. In addition the range of x_f was limited to $0.6 < x_f < 1.0$ in the CERN experiment. The most conservative estimate that can be made is that the x_f distribution is flat. Thus, it is assumed that 2.5 times more events would have been observed if $0.0 < x_f < 1.0$ were available. The total suppression factor is about 10.

The CERN cross sections are quoted in μb per beryllium nucleus. For comparison we use the standard conversion of μb per nucleon = (μb per nucleus)/$A^{2/3}$ where A is the atomic weight.

The U^+ signal is the strongest in their data. After making the above corrections, the expected comparison cross section to our energy is $\sigma(U^+) = 112$ nb. The upper limit on the $\overline{U}^+$ cross section for this experiment was calculated to be $\sigma(\overline{U}^+) = 17$ nb.

The BIS experiment also give cross sections. Using the same type of adjustments similar to those for CERN experiment, the available energy for 40 GeV neutrons is only 6.6 GeV. This data does not have a strange particle in the initial state, so the only renormalizations are for the energy and the $\bar{p}$ in the initial state. The comparison cross section becomes 10 microbarns. Our cross section upper limits are about an order of magnitude lower than those expected from the CERN experiment and at least two orders of magnitude lower than the BIS experiment. The U(3.1) isn't observed in this $\bar{p}p$ experiment at 8 GeV/c. Theoretically, the existence of the U is a problem. Close[7] states that if the U is a baryonium, then other similar states with high mass and narrow widths should be observed as well. None are observed.

5. CONCLUSIONS

In summary, we have searched for the U(3.1) in our data and have not observed it. Our 90% confidence upper limit cross sections are an order of magnitude or more lower than the expected cross sections from the extrapolation of other experiments. In this data we do observe the $\overline{\Sigma}$ (1385) decaying into $\overline{\Lambda}\pi^-$.

This work was supported by the US Department of Energy under contract No. DE-FG05-87ER40319, No. DE-AC02-84ER40125, No. DE-AC02-76CH00016 and US National Science Foundation Grant No. PHY90-01349.

REFERENCES

1. M. Bourquin, et. al. Phys. Lett. B. **172**, (1986) 113.
2. A.N. Aleev, et. al. Search for Narrow Baryonia With Negative and Positive Strangeness. Dubna Preprint (1990), see also Aleev, et.al. JINR Rapid Communication **19-86**, (1986) 16 and Aleev, et. al. JINR **D1-88**, (1988) 368.
3. A. Boehnlein, et. al. Proceedings of the Conference on Glueballs, Hybrids and Exotic Hadrons, Ed. S.U. Chung, AIP. Proceedings No. **185**, (1989) p. 446.
4. S.U. Chung, et. al. Phys. Rev. Lett. **55**, (1985) 779.
5. Particle Data Group. "Review of Particle Properties." Phys. Lett. **B239**, (1990) 1.
6. Aubert, et. al. Nuc. Phys. **B89**, (1975) 1. Antipov, et. al. Phys. Lett. **60B**, (1976) 309. Anderson, et. al. Phys. Rev. Lett. **37**, (1976) 799.
7. F. Close. Proceedings of the Conference on Glueballs, Hybrids and Exotic Hadrons, Ed S.U. Chung, AIP Conf. Proceedings **185**, (1989) p. 421.

DISCLAIMER

This report was prepared as an account of work sponsored by an agency of the United States Government. Neither the United States Government nor any agency thereof, nor any of their employees, makes any warranty, express or implied, or assumes any legal liability or responsibility for the accuracy, completeness, or usefulness of any information, apparatus, product, or process disclosed, or represents that its use would not infringe privately owned rights. Reference herein to any specific commercial product, process, or service by trade name, trademark, manufacturer, or otherwise does not necessarily constitute or imply its endorsement, recommendation, or favoring by the United States Government or any agency thereof. The views and opinions of authors expressed herein do not necessarily state or reflect those of the United States Government or any agency thereof.