LA-7661-MS
Informal Report

Special Distribution
Issued: February 1979

Wall Resistivity Effects in a Toroidal Pinch, Feedback Stabilization

Guthrie Miller

NOTICE

This report was prepared as an account of work sponsored by the United States Government. Neither the United States nor the United States Department of Energy, nor any of their employees, nor any of their contractors, subcontractors, or their employees, makes any warranty, express or implied, or assumes any legal liability or responsibility for the accuracy, completeness or usefulness of any information, apparatus, product or process disclosed, or represents that its use would not infringe privately owned rights.

WALL RESISTIVITY EFFECTS IN A TOROIDAL PINCH, FEEDBACK STABILIZATION

by

Guthrie Miller

ABSTRACT

The instability of a toroidal pinch with resistive walls is calculated. Feedback stabilization is considered.

I. INTRODUCTION

In this report the stability of a reversed field pinch surrounded by walls of finite electrical conductivity is investigated. Pfirsch and Tasso have derived a general theorem[1] stating that a magnetohydrodynamically unstable configuration cannot be stabilized by the introduction of resistive walls. Here, the nature of the instability with resistive walls is examined and feedback stabilization is considered.

A simple sharp-boundary model for the plasma is used. The stability calculation for thin resistive walls using this model was done long ago.[2] Although the formulae in Ref. 2 agree with those derived in this report, they are applied in a different parameter regime. In Ref. 2 the situation of interest had $B_z \gg B_\theta$, where B_z and B_θ are the magnetic field components at the plasma surface. However, for $B_z \gg B_\theta$, there is essentially no wall stabilization, so wall resistivity effects are not of great interest. For the reversed field pinch, $B_\theta \gg B_z$ and wall stabilization can be important. Wall stabilization is, in fact, essential to the stability of the reversed field

pinch. Therefore, the actual nonexistence of true wall stabilization, as pointed out by Pfirsch and Tasso, raises interesting questions about how to deal with the residual wall-resistivity-related instability.

The general ideas and some of the analysis in this report would carry over to the high-beta stellarator, another configuration dependent on wall stabilization.

II. PLASMA MOTION WITH A RESISTIVE WALL

In this section the plasma equation of motion is obtained using the sharp-boundary model and the near-marginal-stability approximation. Using these assumptions, the equation of motion in general form for a plasma displacement $\underset{\sim}{\xi} \sim \mathrm{Re}\{\underset{\sim}{\xi}(r)\exp[i(m\theta-hz)+\gamma t]\}$ can be written down immediately,[3]

$$\ddot{\xi}\,\xi = \gamma^2\xi^2 = \frac{hI_m'(ha)}{\pi a\rho L I_m(ha)} \int \left\{\left[B_r \underset{\sim}{B}\cdot\underset{\sim}{u} - \frac{B^2}{2}u_r\right] + \left[(\underset{\sim}{B}\cdot\underset{\sim}{\nabla}\underset{\sim}{u})\cdot\underset{\sim}{B}\right]\xi_r\right\} a\, d\theta\, dz \quad , \quad (1)$$

where $\xi \equiv \xi_r(a)$ with a the plasma radius, ρ is the plasma density, L is the total plasma length (over which the z integration is taken), B is the magnetic field, and $\underset{\sim}{u}$ is equal to $\underset{\sim}{\xi}$ inside the plasma and its analytic continuation outside. The brackets in Eq. (1) denote the jump in the quantity enclosed at r = a, that is, outside minus inside.

To evaluate the right-hand side of Eq. (1) it is necessary to know the plasma displacement and the magnetic field inside and outside the plasma. These are solutions of the marginal equation of motion and are as follows.

$$\underset{\sim}{\xi} = \frac{i}{h}\nabla\xi_z \quad ,$$

$$\underset{\sim}{B}^i = B(1-\beta)^{1/2}\,(\underset{\sim}{e}_z + \underset{\sim}{\nabla}\xi_z) \quad ,$$

$$\underset{\sim}{B}^o = \frac{B_\theta a}{r}\,\underset{\sim}{e}_\theta + B_z\,\underset{\sim}{e}_z + \underset{\sim}{\nabla}\lambda \quad , \qquad (2)$$

where the superscripts i and o denote the regions inside or outside the plasma boundary, and

$$\xi_z = -i\xi \frac{I_m(hr)}{I_m'(ha)} \quad ,$$

$$\chi = CI_m(hr) + DK_m(hr) \quad . \tag{3}$$

In Eq. (3) and subsequent expressions, the exponential θ and z dependence is not shown for simplicity.

The constant plasma equilibrium pressure p is determined from the magnetic fields given by Eq. (2) to be $p = \beta B^2/2$, where $B = (B_\theta^2 + B_z^2)^{1/2}$.

The coefficients C and D are obtained from the boundary conditions at the plasma and imperfectly conducting wall surfaces. The boundary condition at the plasma surface, from $B \cdot n = 0$, is

$$\chi'(ha) = CI_m'(ha) + DK_m'(ha) = \frac{i\xi}{ha}(mB_\theta - haB_z) \quad , \tag{4}$$

where the prime denotes differentiation with respect to the variable hr.

The physical origin of the second boundary condition is discussed in the next section. If $\chi(ha)$ is specified together with $\chi'(ha)$ then the magnetic field perturbation outside the plasma is determined. The magnetic field perturbation inside the plasma is completely determined by the plasma surface deformation ξ alone. In terms of $\chi(ha)$, Eq. (1) gives the following result.

$$\gamma^2 = \frac{haI_m'(ha)}{I_m(ha)} \frac{B_\theta^2}{a^2\rho} - \frac{h^2B^2(1-\beta)}{\rho} + \frac{(mB_\theta - haB_z)^2}{a^2\rho} \frac{I_m'(ha)\chi(ha)}{I_m(ha)\chi'(ha)} \quad . \tag{5}$$

It is more natural to express the result in terms of the magnetic field perturbation at the outer wall, r = b, where the physical boundary condition occurs. This can be done as follows.

$$\frac{I_m'(ha)\chi(ha)}{I_m(ha)\chi'(ha)} = 1 + \frac{1}{haK_m'(ha)I_m(ha)} \frac{1 + \gamma\tau}{1 + \gamma\tau(1-x)} \quad , \tag{6}$$

where

$$x \equiv \frac{I_m'(ha)K_m'(hb)}{I_m'(hb)K_m'(ha)} \quad ,$$

$$\gamma\tau \equiv hbI_m'(hb)K_m'(hb)g \quad ,$$

$$g \equiv \frac{\chi(hb)}{\chi'(hb)} - \frac{K_m(hb)}{K_m'(hb)} \quad .$$

The quantity $\chi(hb)/\chi'(hb)$ or g is unknown at this stage and merely summarizes the effect of the outer wall. With a perfectly conducting wall, $\chi' \to 0$ and $g \to \infty$. With a perfectly insulating wall, or a vacuum, $g \to 0$. The suggestive notation $\gamma\tau$ used in Eq. (6) is explained by considering the decay of a magnetic field $\sim \mathrm{Re}\{\underset{\sim}{B}(r)\exp[i(m\theta-hz)+\gamma t]\}$ inside and outside of an imperfectly conducting cylinder. The eigenvalue equation for γ is

$$\frac{I_m(hb)}{I_m'(hb)} = \frac{\chi(hb)}{\chi'(hb)} \quad , \tag{7}$$

which, from Eq. (6), reduces to the equation $\gamma\tau = -1$. Thus the quantity τ (which may depend on γ) is the decay time for the magnetic field.

In Fig. 1 are shown plots of $\omega^2 = -\gamma^2$, obtained from Eq. (5), as a function of the longitudinal wave number for a perfectly conducting wall with $b/a = 2$ and $b/a = 10$. Note that the limit $b/a \to \infty$ is equivalent to $\gamma\tau \to 0$. Only $m = 1$ is shown because other m values are stable. Figure 1 shows that for B_z/B_θ small (contrary to the situation in a Tokamak) and β small, the $m = 1$ mode is wall stabilized. For long times however, the resistive wall looks like a vacuum and this stability is lost.

Toroidal geometry, as a first approximation, merely limits the values of h to $h = n/R$. The points plotted in Fig. 1 correspond to $R/a = 5$, and show that for fairly small R/a only a few n values are unstable. Figure 2 shows the wall ratio b/a necessary for marginal stability.

III. DETERMINATION OF g

To obtain g, defined by Eq. (6), the magnetic field in the wall material must be found by solving the equations $\nabla \times B = \sigma E$, $\nabla \times E = -\partial B/\partial t$, and joining the solution continuously to the vacuum magnetic field solutions. These equations reduce to the single equation $\nabla^2 B = \gamma\sigma B$, solutions of which are discussed in the Appendix.

If the wall material extends from r = b to r = d, the magnetic field is given in the region r > d by

$$B_r = hGK_m'(hr)$$

$$B_\theta = \frac{im}{r} GK_m(hr)$$

$$B_z = -ihGK_m(hr) \quad , \tag{8}$$

and by

$$B_r = k[CI_m'(kr)+DK_m'(kr)] - \frac{i\gamma\sigma m}{h^2 r}[EI_m(kr)+FK_m(kr)]$$

$$B_\theta = \frac{im}{r}[CI_m(kr)+DK_m(kr)] + \frac{\gamma\sigma k}{h^2}[EI_m'(kr)+FK_m'(kr)]$$

$$B_z = \frac{k^2}{h}[CI_m(kr)+DK_m(kr)] \quad , \tag{9}$$

for d > r > b, where $k^2 = h^2 + \gamma\sigma$. If χ is the magnetic scalar potential in the region r < b and χ' denotes its derivative with respect to hr, then the boundary conditions that insure the continuity of the three components of $\underset{\sim}{B}$ at r = b and R = d are 6 equations in the 6 unknowns C, D, E, F, G, and $\chi'(hb)$. By solving these equations $\chi'(hb)$ is obtained in terms of $\chi(hb)$ as follows.

$$\frac{\chi'(hb)}{\chi(hb)} = \frac{h(A - \alpha D)^2}{k^3 bdAD\left(AB + \frac{b}{d}\,\alpha DC - \frac{kK_m'(hd)}{hK_m(hd)}\,DA\right)} + \frac{h}{k}\,\frac{CA + \frac{d}{b}\,\alpha BD}{AD} \quad , \tag{10}$$

where

$$\alpha = \frac{\gamma\sigma m^2}{k^2h^2bd} \quad ,$$

$$A = K_m'(kb)I_m'(kd) - I_m'(kb)K_m'(kd) \quad ,$$

$$B = K_m(kb)I_m'(kd) - I_m(kb)K_m'(kd) \quad ,$$

$$C = K_m'(kb)I_m(kd) - I_m'(kb)K_m(kd) \quad ,$$

$$D = K_m(kb)I_m(kd) - I_m(kb)K_m(kd) \quad .$$

Equation (10) is too cumbersome to be very useful. There are two limiting situations in which the problem is greatly simplified. These are (1) an infinitely thick wall, and (2) a thin wall. For the first case the magnetic field in the wall is given by Eq. (9) with the coefficients C and E equal to zero. Continuity of $\underset{\sim}{B}$ at $r = b$ yields 3 equations in the 3 unknowns D, F, and $\chi'(hb)$. Solving these equations gives the result

$$\frac{\chi'(hb)}{\chi(hb)} = \frac{hK_m'(kb)}{kK_m(kb)}\left[1 + \frac{\gamma\sigma m^2}{k^2h^2b^2}\left(\frac{K_m(kb)}{K_m'(kb)}\right)^2\right] \quad . \tag{11}$$

For a thin wall, the magnetic field is given by Eq. (8) for $r > b$. The current, which is assumed to be uniformly distributed in the wall, is $j_z = [B_\theta]/\Delta$, $j_\theta = hbj_z/m$ from the equations $\underset{\sim}{\nabla} \times \underset{\sim}{B} = \underset{\sim}{j}$ and $\underset{\sim}{\nabla}\cdot\underset{\sim}{j} = 0$, respectively, where Δ is the wall thickness and the brackets denote the jump in the quantity enclosed at $r = b$. The r component of the equation $-\partial\underset{\sim}{B}/\partial t = \underset{\sim}{\nabla} \times E$ reduces to

$$-\gamma B_r = \frac{1}{\sigma}\left(\frac{im}{b} j_z + ihj_\theta\right) = \frac{im}{\sigma b}\left(1 + \frac{(hb)^2}{m^2}\right)\frac{[B_\theta]}{\Delta} \quad ,$$

and the continuity of B_r at the inner and outer wall surfaces provides 2 equations in the 2 unknowns G and $\chi(hb)$, which can be solved for $\chi(hb)$. The result is

$$\frac{\chi(hb)}{\chi'(hb)} = \frac{K_m(hb)}{K_m'(hb)} - \frac{h\gamma\sigma b^2\Delta}{m^2+(hb)^2} \quad . \tag{12}$$

Whether a wall of a given moderately small thickness appears thick or thin depends on γ. For γ small the wall can be considered thin, while for γ large it appears thick. The large-γ expansion of Eq. (11) is

$$\frac{\chi(hb)}{\chi'(hb)} \cong -\frac{hb^2(\gamma\sigma)^{1/2}}{m^2+(hb)^2} \quad . \tag{13}$$

A formula that interpolates between Eq. (13), for large γ, and Eq. (12), for small γ, is as follows:

$$\frac{\chi(hb)}{\chi'(hb)} - \frac{K_m(hb)}{K_m'(hb)} \cong g_a \equiv -\frac{hb}{m^2+(hb)^2}\,\frac{\gamma\sigma\Delta b}{(1+\gamma\sigma\Delta^2)^{1/2}} \quad , \tag{14}$$

where g_a, defined above, is an approximate formula for g [g is defined by Eq. (6)].

Somewhat surprisingly, g_a is a good approximation for g obtained from the exact expression, Eq. (10), over a large range of parameters, hb from 0 to 2 and Δ/b from 0 to 0.5. This is shown in Fig. 3. The agreement is sufficiently good that for most purposes the exact expression, Eq. (10), can be dispensed with and Eq. (14) used instead.

The problem of the decay of the magnetic field inside and outside of an imperfectly conducting cylinder may now be solved. The eigenvalue equation, Eq. (7), becomes (using the approximate version of g)

$$\gamma = -\frac{1}{\tau} \equiv \frac{(m^2 + (hb)^2)(1 + \gamma\sigma\Delta^2)^{1/2}}{\sigma\Delta h^2 b^3 I_m'(hb) K_m'(hb)} \quad , \tag{15}$$

which is to be solved for γ.

IV. FEEDBACK STABILIZATION THROUGH A THIN RESISTIVE WALL

Wall stabilization results from currents set up by the plasma motion flowing in the conducting wall. These currents eventually decay, allowing the plasma to move without constraint. The growth rate is roughly $1/\tau$, where τ is a characteristic time for the decay of the wall currents. This instability could be stabilized by feedback, and in this section an equation of motion for a plasma surrounded by a thin resistive wall is derived, where external forces are provided by driven windings. The stability with a closed-loop feedback system is then considered.

The feedback windings are assumed to lie on the surface $r = b$, presumably just outside the shell, which is of small thickness Δ. Placing the windings further away would reduce their effectiveness. It is most important to have the shell close to the plasma so that placing the feedback windings inside the shell is probably not a good idea.

The boundary conditions at $r = b$, which relate the vacuum magnetic fields inside and outside, are basically those used to derive Eq. (12) with the exception that in the shell, $\underset{\sim}{E} = (\underset{\sim}{j}-\underset{\sim}{j}_0)/\sigma$, where $\underset{\sim}{j}$ is the total current and $\underset{\sim}{j}_0\Delta$ is the current driven in the feedback windings. As a result, Eq. (12) becomes

$$\frac{\chi(hb)}{\chi'(hb)} = \frac{K_m(hb)}{K_m'(hb)} - \frac{h\gamma\sigma b^2\Delta}{m^2+(hb)^2} + \frac{ib\Delta j_{0z}}{m\chi'(hb)} \quad . \tag{16}$$

For definitness, a helical, 2-wire feedback winding is assumed. If I is the current in each wire, the m, h Fourier component of the current distribution is

$$i\Delta j_{0z} = \frac{2mI}{\pi b} \quad . \tag{17}$$

Using Eqs. (16) and (17) and returning to Eq. (1), the following plasma equation of motion is obtained.

$$\gamma^2\xi = \gamma_0^2\left(\frac{1 - \gamma\tau(x/x_1-1)}{1 + \gamma\tau(1-x)}\right)\xi + \frac{F}{1 + \gamma\tau(1-x)} + F_R \quad , \tag{18}$$

where γ_0^2 is the growth rate squared for $b/a \to \infty$ [see Eq. (5)], F is the quasi-steady force produced by the driven windings,

$$F = -\frac{2hb}{\pi a^2\rho}\frac{I_m'(ha)K_m'(hb)}{I_m(ha)K_m'(ha)}(mB_\theta \quad haB_z)\ I \quad , \tag{19}$$

and F_R is the toroidal force, which acts only for h = 0, m = 1,

$$F_R = \frac{B_\theta^2[\log(\frac{8R}{a}) - \frac{3}{2}] + \beta B^2}{\rho R} \quad , \tag{20}$$

with

$$x = \frac{I_m'(ha)K_m'(hb)}{I_m'(hb)K_m'(ha)} \quad ,$$

$$x_1 = \frac{I_m'(ha)K_m'(hb_1)}{I_m'(hb_1)K_m'(ha)} \quad ,$$

$$\tau = -\frac{\sigma\Delta h^2 b^3 I_m'(hb) K_m'(hb)}{m^2 + (hb)^2} \quad .$$

The quantity b_1 is the radial location of a perfectly conducting wall that would produce marginal stability. It is assumed that $b < b_1$, which implies $x > x_1$. With a perfectly conducting wall the oscillation frequency is

$$\omega^2 = \gamma_0^2 \frac{x/x_1 - 1}{1 - x} \quad ,$$

obtained by taking the limit $\gamma\tau \to \infty$ in Eq. (18).

An important simplification of Eq. (18) results because $\gamma_0 >> 1/\tau$, which allows the acceleration term $\gamma^2\xi$ to be neglected. Use of the word feedback means that F is dependent on ξ. A (possibly frequency dependent) gain factor α is defined by $F = -\alpha\gamma_0^2\xi$, which implies

$$I = -\frac{\pi}{2} \frac{(mB_\theta - haB_z)}{h^2 ab I_m'(ha) K_m'(hb)} \frac{x_1}{1 - x_1} \alpha\xi \quad . \tag{21}$$

Ignoring F_R, the final equation of motion with feedback is as follows

$$0 = \gamma_0^2\xi\left[1 - \alpha - \gamma\tau(x/x_1 - 1)\right] \quad . \tag{22}$$

Equation (22) shows that with no feedback ($\alpha = 0$), the growth rate is given by

$$\gamma = \frac{1}{\tau} \frac{1}{x/x_1 - 1} \quad . \tag{23}$$

The electrical characteristics of the driven winding are obtained by considering the voltage across the winding terminals. For a 2-wire winding this is given by $V = 2hb\partial\chi'(hb)/\partial t$ per unit length. Using Eq. (16) and Eq. (4), $\chi'(hb)$ can be obtained, and the result for V is given by the equivalent circuit shown in Fig. 4, with

$$I_0 = -\frac{\pi}{2}\,\xi\,\frac{(mB_\theta - haB_z)}{I_m'(hb)K_m'(ha)h^2ab(1-x)} \quad ,$$

$$L = -\,8\,R_T I_m'(hb)K_m'(hb)h^2b^2(1-x) \quad ,$$

$$R = -\,8\,R_T\,\frac{m^2 + (hb)^2}{\sigma\Delta b} \quad ; \qquad (24)$$

where R_T is the major radius of the torus. In practical units ξB is a current in kA equal to $0.8\ \xi(\mathrm{cm})\ B(\mathrm{kG})$, and R_T is an inductance in μH equal to $1.25\ R_T(\mathrm{m})$. Using the resistivity of aluminum ($3\ 10^{-6}$ Ω-cm), $R_T/(\sigma\Delta b)$ is a resistance in mΩ equal to $3\ 10^{-3}\ R_T(\mathrm{m})/[\Delta(\mathrm{cm})b(\mathrm{m})]$.

It is likely that the source impedance of the ciruit used to drive the feedback windings would be much larger than the resistance or inductive impedance (at $\gamma \sim 1/\tau$) given by Eq. (24). With a purely resistive source the feedback circuit is as shown in Fig. 5, where V is controlled by the plasma displacement ξ. The displacement could be detected by means of the voltage induced on the feedback windings themselves.

The feedback current is given by Eq. (21) or equivalently by $I = \alpha x_1(1-x)/[x(1-x_1)]I_0$ with I_0 defined by Eq. (24). The necessary and sufficient condition for stability with feedback is $\alpha > 1$. The power dissipated depends on the fluctuation level with feedback. Fluctuations are caused either by noise in the feedback system or by fluctuating external influences, both of which are unknown. The feedback power is I^2R_s, with I expressed in terms of the r. m. s. level of the fluctuations.

Numerical values for the equivalent circuit shown in Fig. 5 are given in Table I using reactor-like parameters. The necessary voltages, currents, and response times seem readily attainable using present technology.

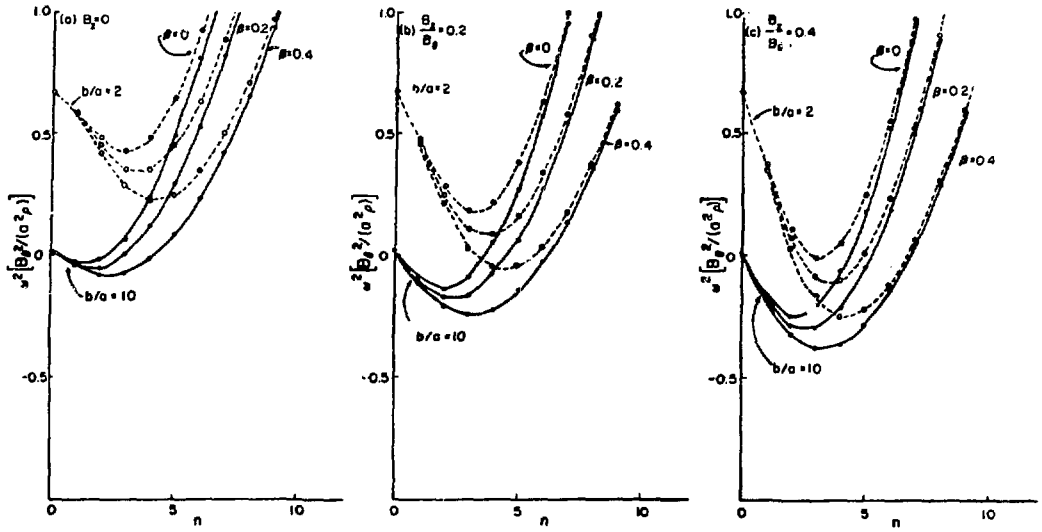

Fig. 1.
The m = 1 oscillation frequency (or instability growth rate of a toroidal z pinch vs the longitudinal mode number n = 5ka (corresponding to R/a = 5).

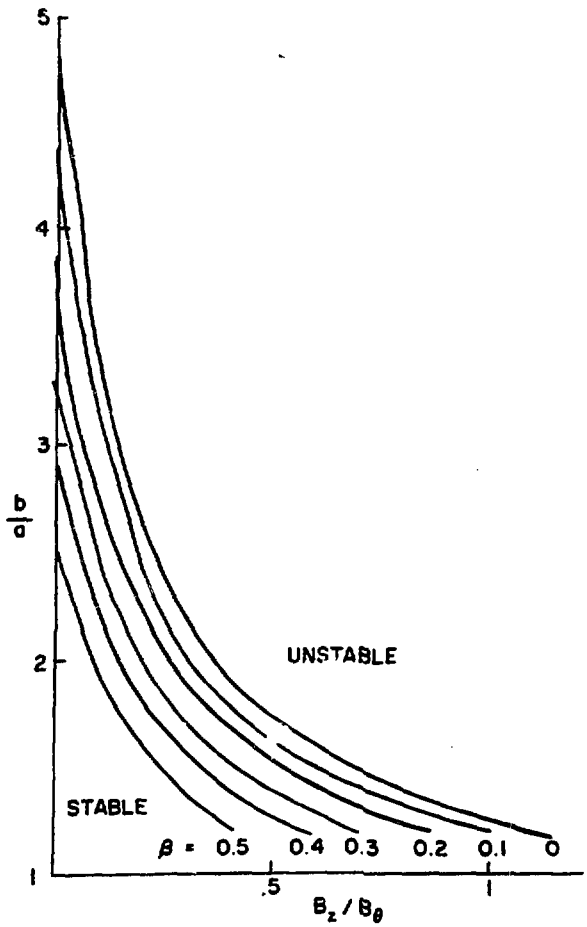

Fig. 2.
Wall radius to plasma radius ratio for marginal stability of the m = 1 mode.

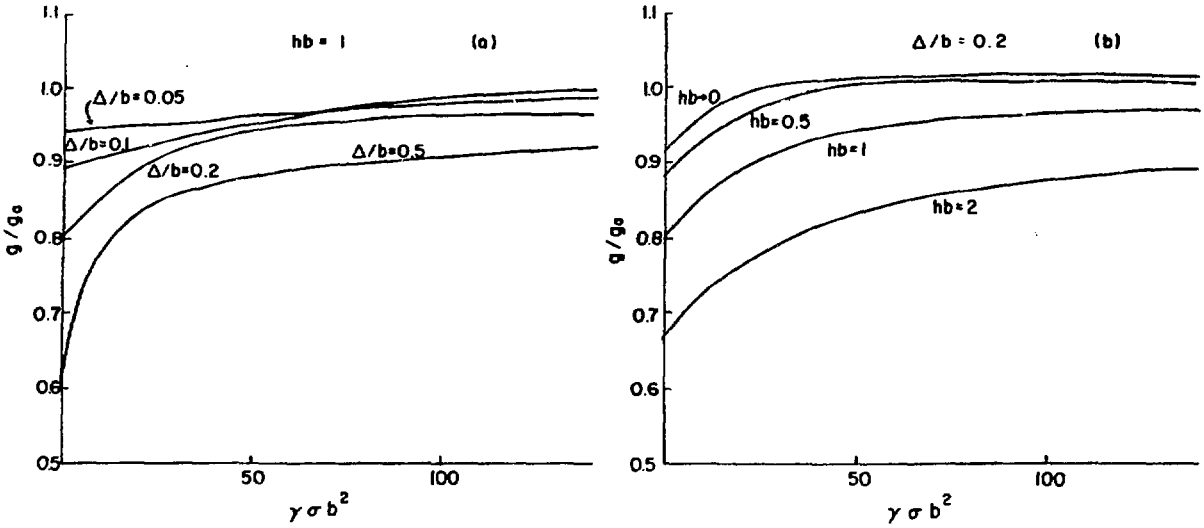

Fig. 3.

Ratio of the exact value of g to the approximation g_a as a function of the growth rate γ.

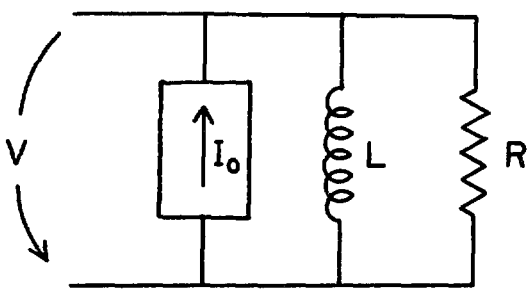

Fig. 4.
Equivalent circuit of the feedback winding.

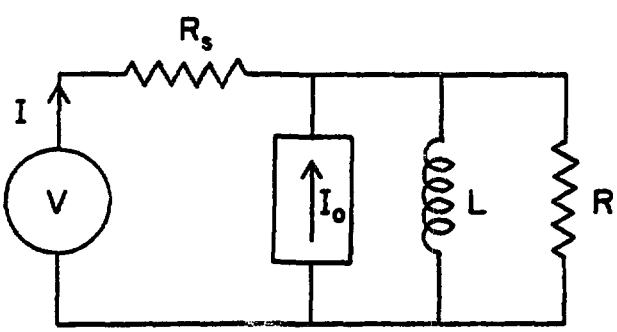

Fig. 5.
Equivalent circuit of a feedback system utilizing a feedback controlled voltage source V with source resistance R_s.

TABLE I
NUMERICAL EXAMPLE

Pinch Parameters

R_T = 12.7 m

b = 1.5 m

a = 1.2 m

Δ = 1 cm

B_θ = 30 kG

B_z/B_θ = 0.2

β = 0.2

ha = 0.5

b_1 = 2.6 m

Equivalent Circuit

L = 25 μH

R = 0.14 mΩ

τ = L/R = 180 ms

I_o = 140 kA ξ(cm)

V = 11 Volts R_s(mΩ) α ξ(cm)

REFERENCES

1. D. Pfirsch and H. Tasso, "A Theorem on MHD-Instability of Plasmas With Resistive Walls," Nucl. Fusion 11, 259 (1971).

2. M. D. Kruskal, J. L. Johnson, M. B. Gottlieb, and L. M. Goldman, "Hydromagnetic Instability in a Stellarator," Phys. Fluids 1, 421 (1958).

3. G. Miller, "Magnetohydrodynamics of Nearly Cylindrical Configurations With Fixed Internal Currents," Phys. Fluids (to be published).

APPENDIX

SOLUTIONS OF $\nabla^2 \underset{\sim}{B} = \mu^2 \underset{\sim}{B}$, $\underset{\sim}{\nabla} \cdot \underset{\sim}{B} = 0$

The equation $\nabla^2 \underset{\sim}{B} = \mu^2 \underset{\sim}{B}$ is of second order so there are 2 linearly independent solutions for each vector component, or 6 solutions in all. These are reduced to 4 by the divergence condition. In terms of scalar functions ϕ and ψ with sinusoidal θ and z dependence, e. g., $\phi \sim \mathrm{Re}\{\phi(r)\exp[i(m\theta - hz)]\}$ satisfying the equations $\nabla^2\phi = \mu^2\phi$, $\nabla^2\psi = \mu^2\psi$, the general solution can be written as

$$\underset{\sim}{B} = \underset{\sim}{\nabla} \times [\underset{\sim}{\nabla}\phi \times \underset{\sim}{e}_z] + \underset{\sim}{\nabla} \times [(\underset{\sim}{\nabla}\psi \times \underset{\sim}{e}_z) \times \underset{\sim}{e}_z] \quad .$$

The general solution of $\nabla^2\phi = \mu^2\phi$ is given by

$$\phi(r) = CI_m(kr) + DK_m(kr)$$

with $k^2 = h^2 + \mu^2$.