CONF-851102--102

FUSION ENGINEERING DESIGN CENTER

COMPACT IGNITION TOKAMAK PROGRAM*

CONF-851102--102

DE86 007228

STATUS OF FEDC STUDIES

C. A. FLANAGAN

FOR THE FEDC STAFF

AUSTIN, TEXAS

NOVEMBER 18, 1985

MASTER

DISCLAIMER

This report was prepared as an account of work sponsored by an agency of the United States Government. Neither the United States Government nor any agency thereof, nor any of their employees, makes any warranty, express or implied, or assumes any legal liability or responsibility for the accuracy, completeness, or usefulness of any information, apparatus, product, or process disclosed, or represents that its use would not infringe privately owned rights. Reference herein to any specific commercial product, process, or service by trade name, trademark, manufacturer, or otherwise does not necessarily constitute or imply its endorsement, recommendation, or favoring by the United States Government or any agency thereof. The views and opinions of authors expressed herein do not necessarily state or reflect those of the United States Government or any agency thereof.

*RESEARCH SPONSORED BY THE OFFICE OF FUSION ENERGY, U.S. DEPARTMENT OF ENERGY, UNDER CONTRACT NO. DE-AC05-84OR21400 WITH MARTIN MARIETTA ENERGY SYSTEMS, INC.

By acceptance of this article, the publisher or recipient acknowledges the U.S. Government's right to retain a nonexclusive, royalty free license in and to any copyright covering the article.

DISTRIBUTION OF THIS DOCUMENT IS UNLIMITED

OVERVIEW

TECHNICAL AREAS TO BE DISCUSSED

- MECHANICAL CONFIGURATION STATUS
- MAGNET ANALYSIS – TEMPERATURE DISTRIBUTION
- STRESS ANALYSIS
- COOLING BETWEEN BURNS
- TF COIL JOINT
- FACILITY/DEVICE LAYOUT OPTIONS
- PARAMETRIC ANALYSIS – PENG (LATER)
- RF SYSTEMS – YUGO/FLANAGAN (LATER)
- COST VS SIZE – FLANAGAN (LATER)

SOME EVENTS SINCE OCTOBER

- TECHNICAL REVIEW SCHEDULED WITH EUROPEAN DESIGN TEAM
  - DECEMBER 5,6

- REVIEW WITH FTU TEAM
  - DECEMBER 3

- U.S. TRAVELERS
  - BROWN, FLANAGAN, LEE - FEDC
  - COPPI - MIT
  - CITROLO - PPPL
  - JAMES - OFE

- DESIGN GUIDELINES ISSUED

MECHANICAL CONFIGURATION
(PRESS CONCEPT)

- WORKABLE SCHEME DEVELOPED FOR MAGNET SYSTEM
  - CENTER POST, OH, TF, EF COIL ARRANGEMENT
  - TRACTABLE FIT-UP OF MULTIPLE SURFACES
- FOCUS NOW ON
  - WORKING PRESS SCHEME (HYDRAULIC/MAGNETIC)
  - EXTERNAL TORQUE STRUCTURE

MAGNET SYSTEM

- OH:
  - HEIGHT, cm 188
  - THICKNESS, cm 20
  - MATERIAL "CDA155"

- EF:
  - ALL EXTERNAL
  - MATERIAL "CDA155/CDA102"

- TF:
  - BORE (H*W), cm 165 x 101
  - MATERIAL "CDA155/CDA102"
  - RADIAL THICKNESS, cm
    - INBOARD LEG 20
    - OUTBOARD LEG 25

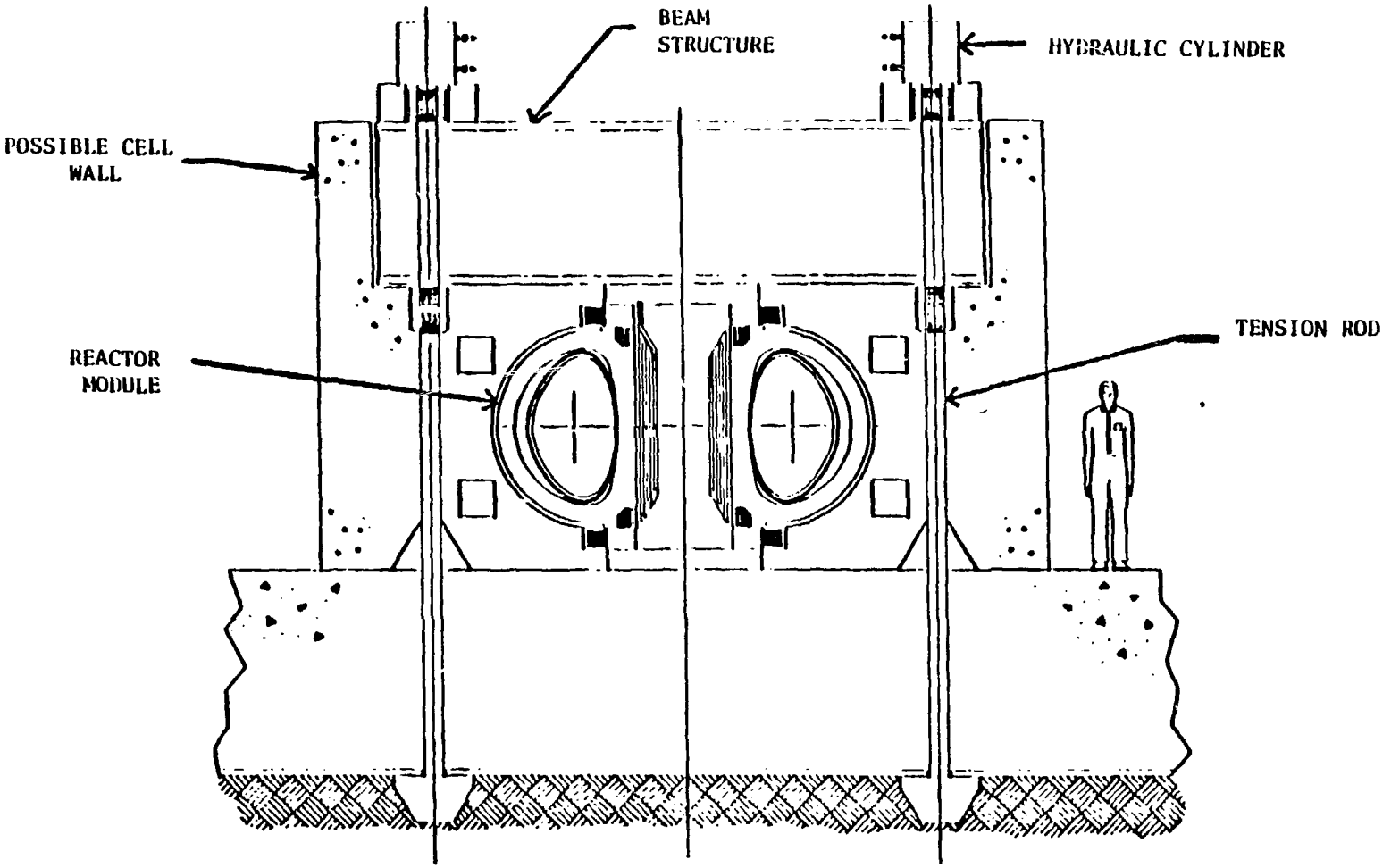

External press concept.

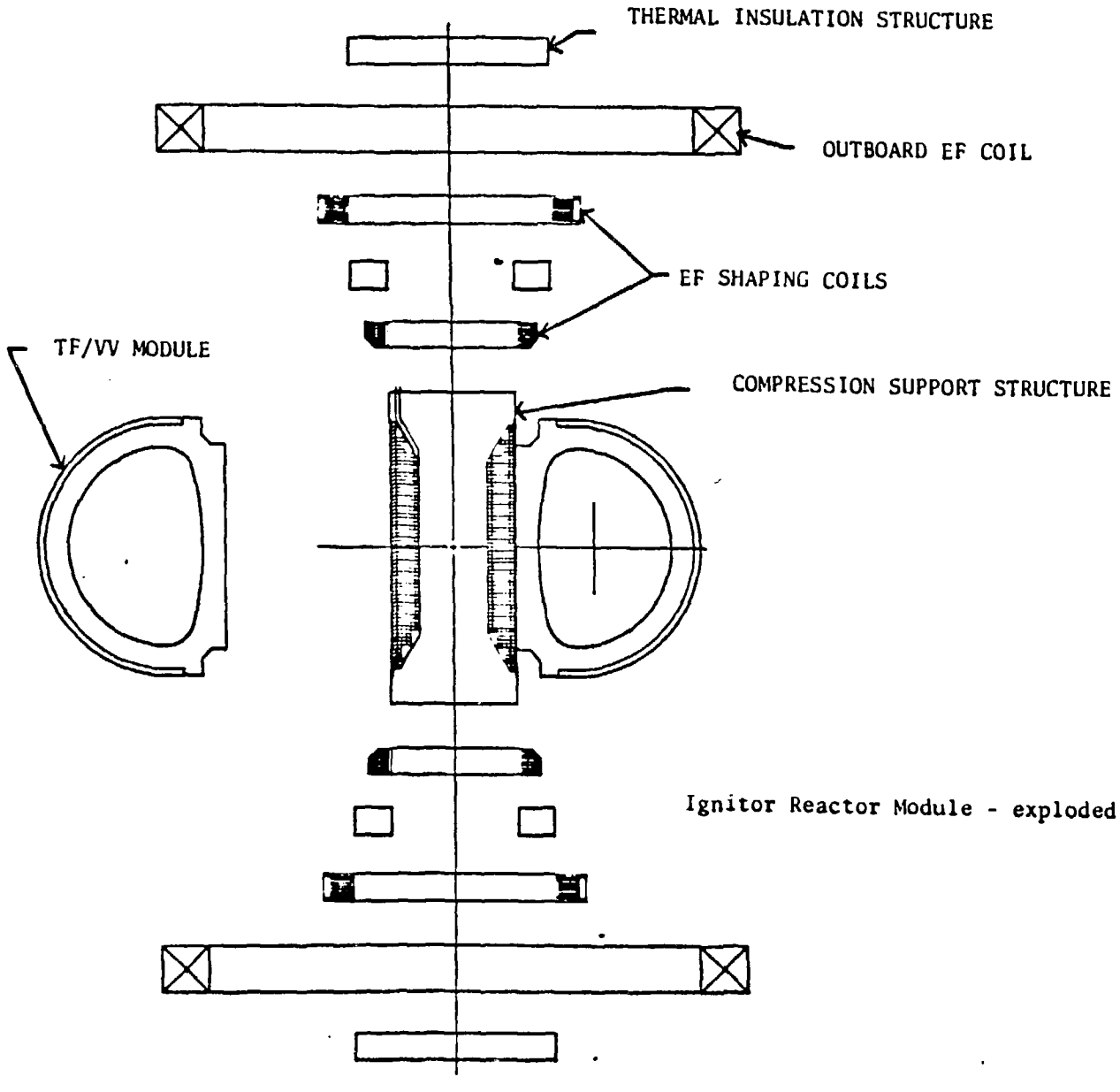

Ignitor Reactor Module - exploded view.

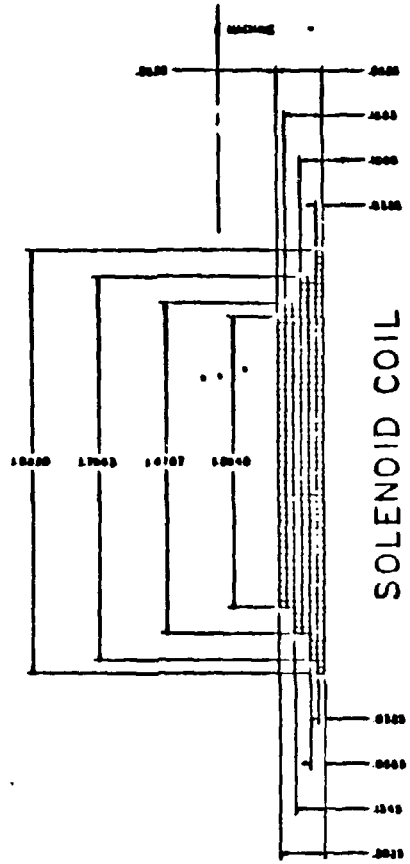

1.08 m Ignitor solenoid.

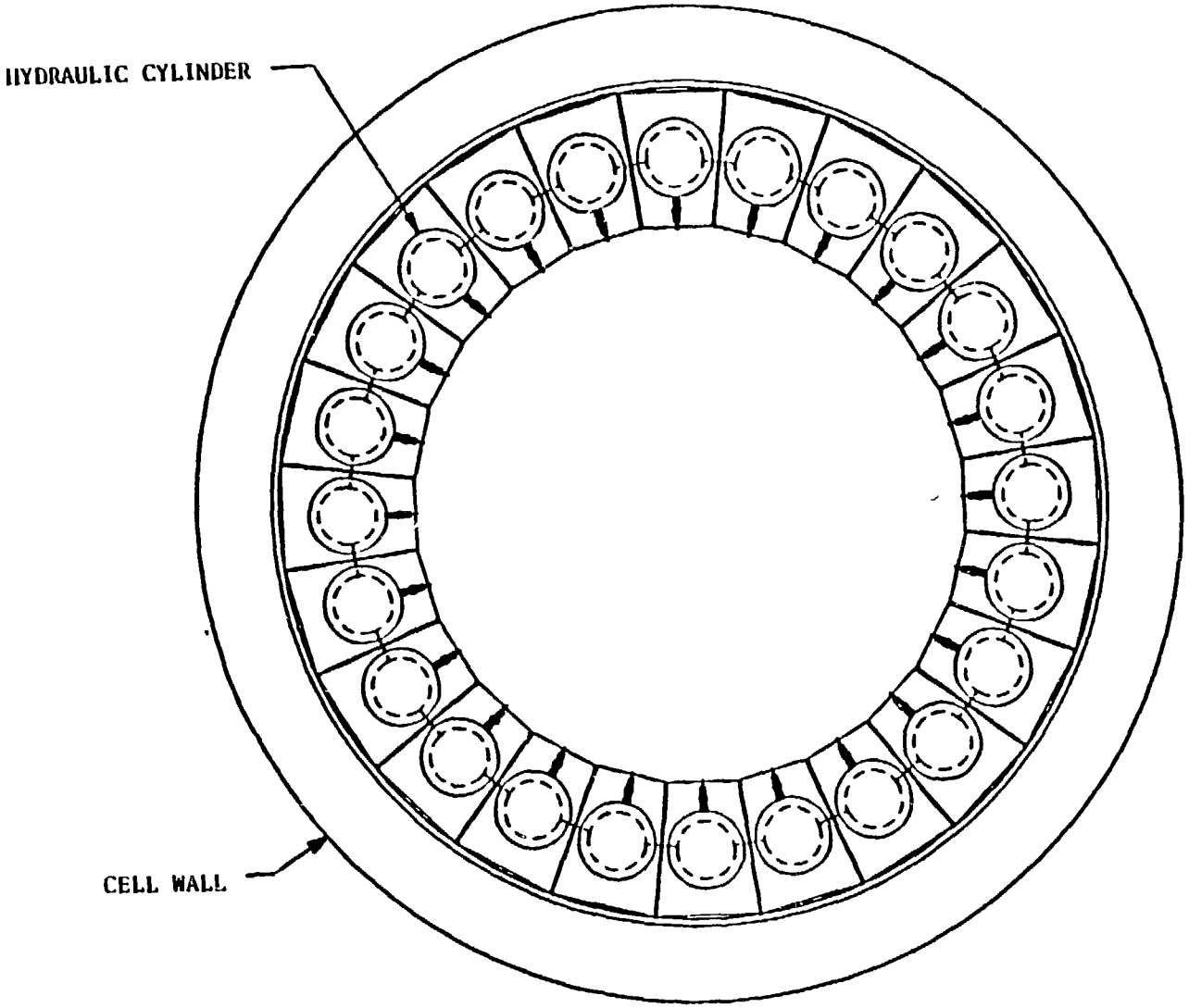

Plan view (Top of machine).

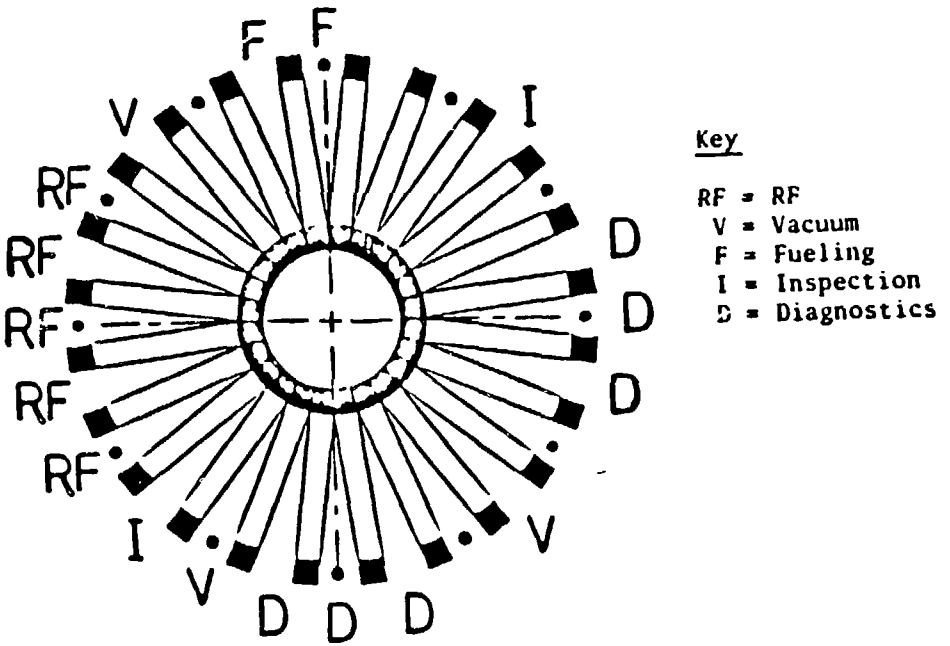

Allocation of port use in Ignitor.

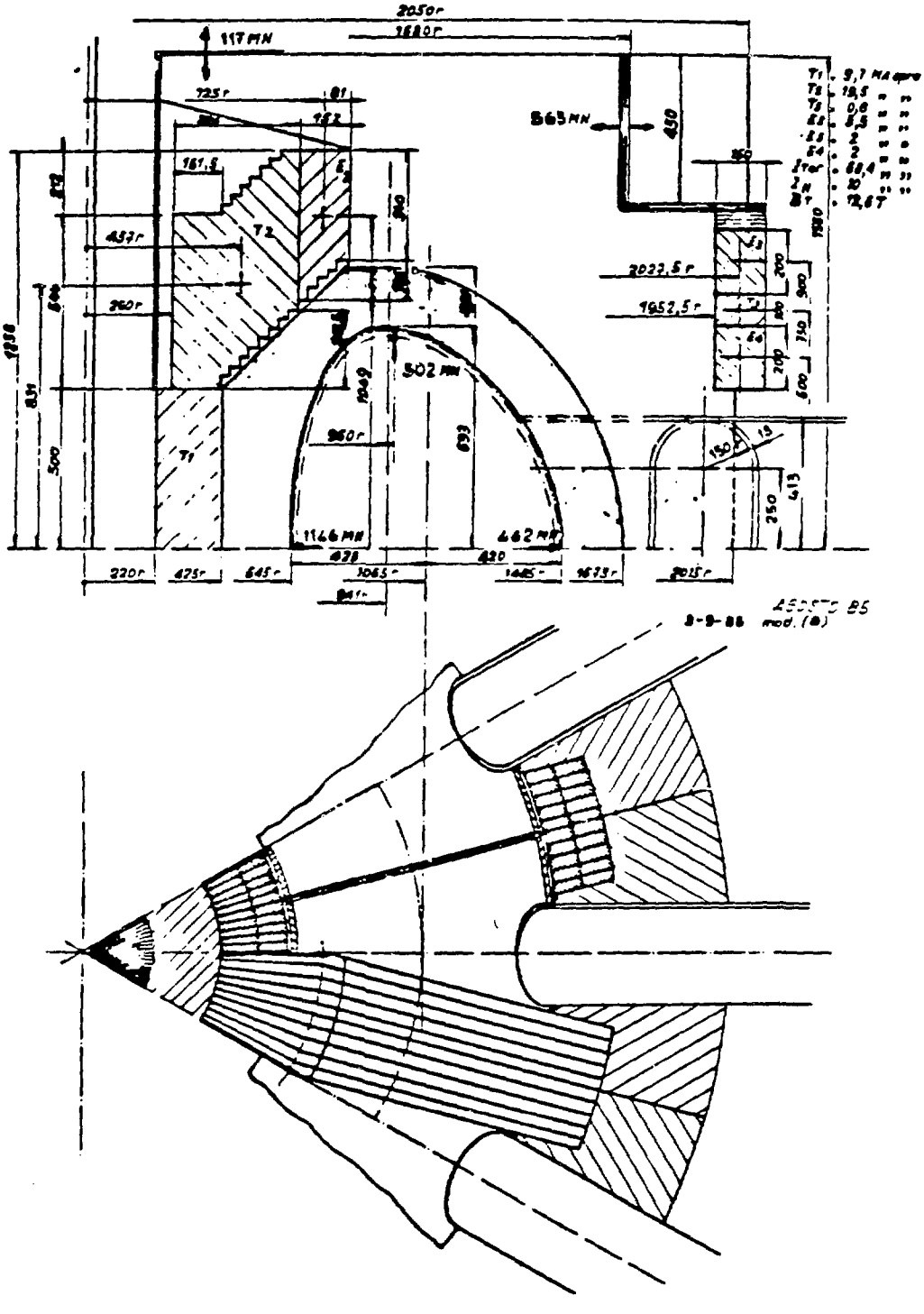

IGNITOR-L (REF. DESIGN)

IGNITOR TF SYSTEM CONFIGURATION

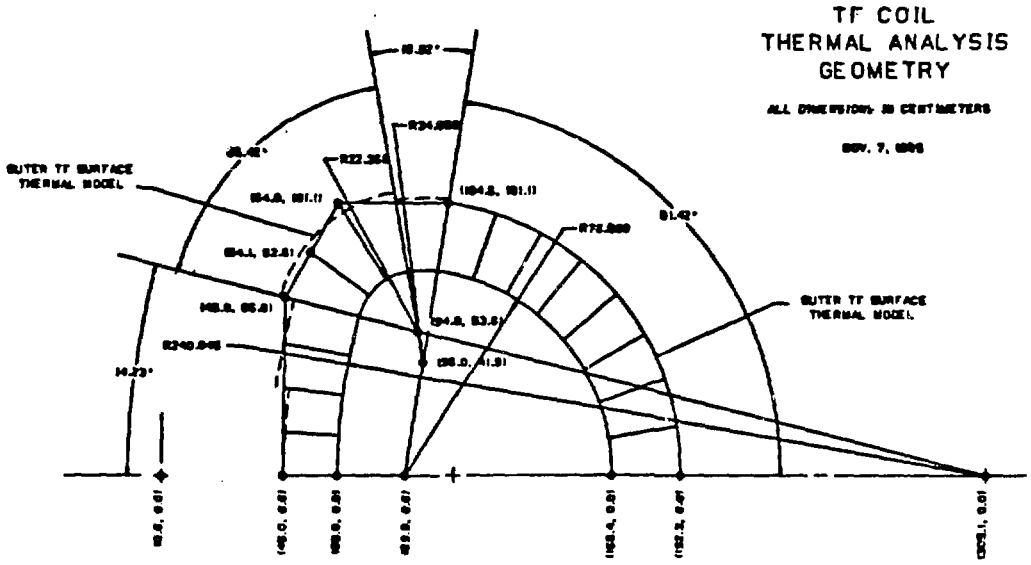

IGNITOR TF CURRENT

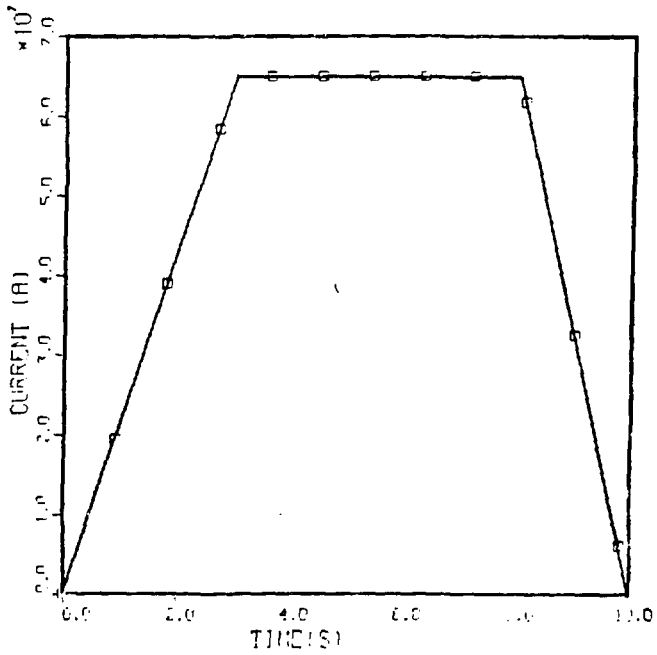

- PHYSICS GUIDELINES REQUIRE PLASMA BURN TIME = 10 T_E. FOR IGNITOR, PLASMA BURN TIME = 5 s.

TEMPERATURE DISTRIBUTION IN THE CENTER POST LEG AS A FUNCTION OF PEAK NUCLEAR HEATING

CDA102 TF-CP QN-0.

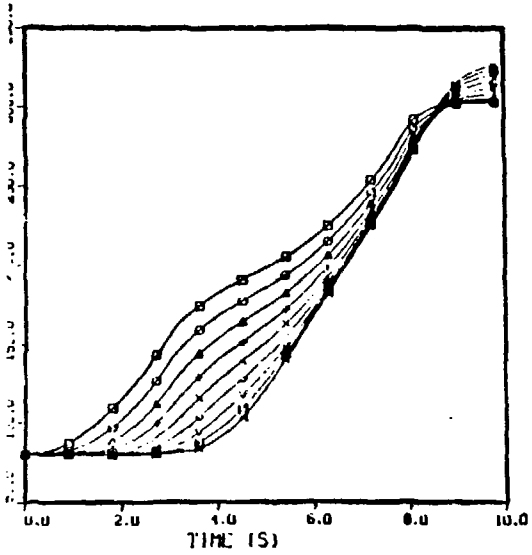

CDA102 TF-CP QN-20

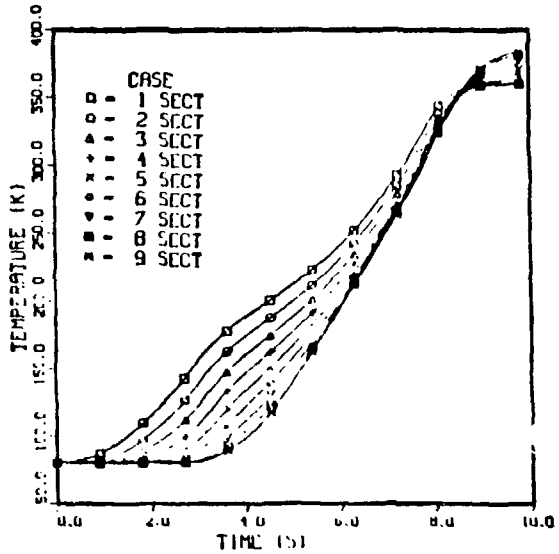

CDA102 TF-CP QN-100

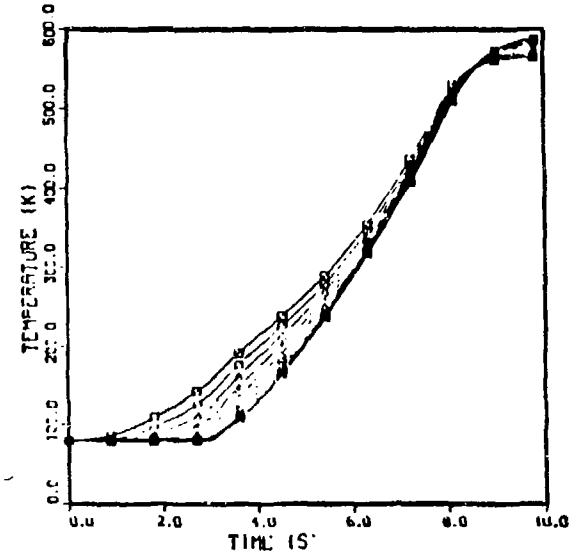

(WITH CDA-102 COPPER)

- PEAK TEMPERATURE OF 490 K IS ATTAINED WITH A PEAK NUCLEAR HEATING RATE OF 100 MW/m^3

- PEAK NUCLEAR HEATING AT $B_{CRITICAL}$ IS 200 MW/m^3. THE PLASMA BURN PERIOD MUST BE REDUCED TO 3.5 s FOR LIMITING PEAK TEMPERATURE TO 500 K.

TEMPERATURE DISTRIBUTION IN THE CENTER POST LEG AS A FUNCTION OF PEAK NUCLEAR HEATING WITH CDA-155 COPPER

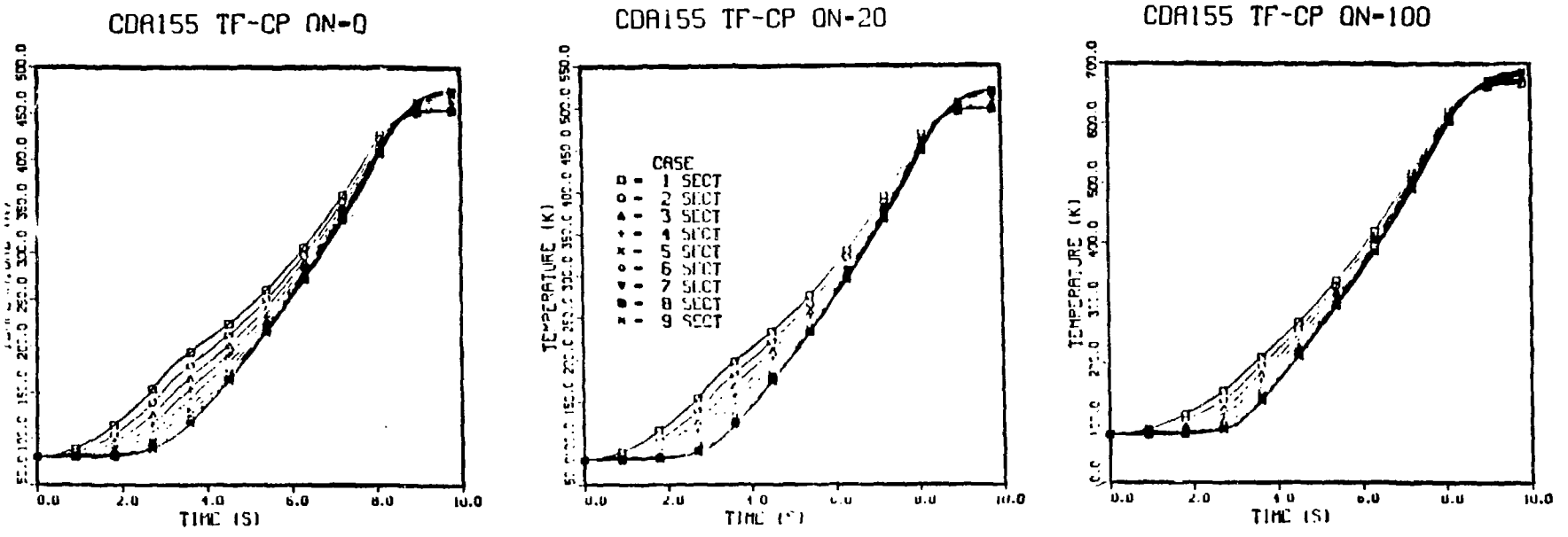

- PEAK TEMPERATURE OF 690 K IS ATTAINED WITH A PEAK NUCLEAR HEATING RATE OF 100 MW/m^3.

- PLASMA BURN PERIOD MUST BE REDUCED TO 2.5 s FOR LIMITING PEAK TEMPERATURE TO 500 K. THIS BURN PERIOD WILL BE FURTHER REDUCED IF NUCLEAR HEAT LOAD IS INCREASED.

POWER CONSUMPTION AS A FUNCTION OF COIL MATERIAL

CDA102 TF-CP I**2*R

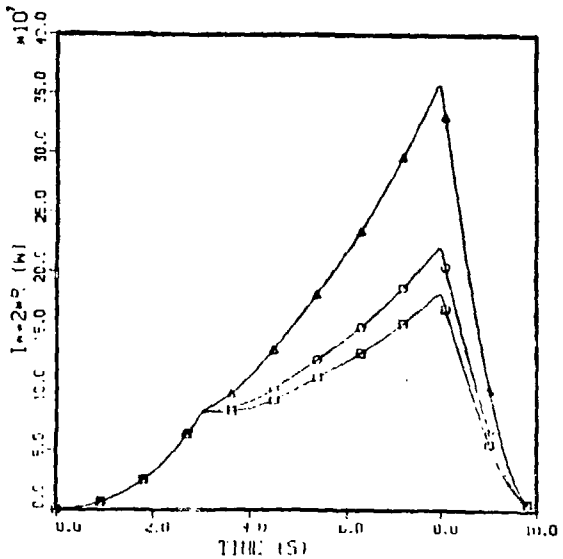

CDA102/155 TF-CP I**2*R

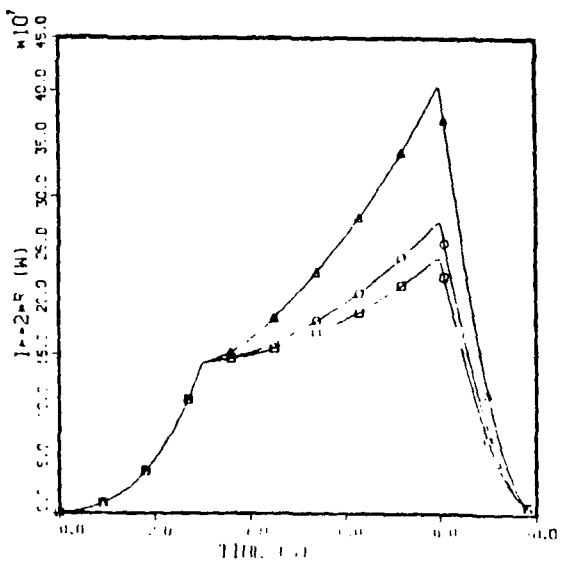

CDA155 TF-CP I**2*R

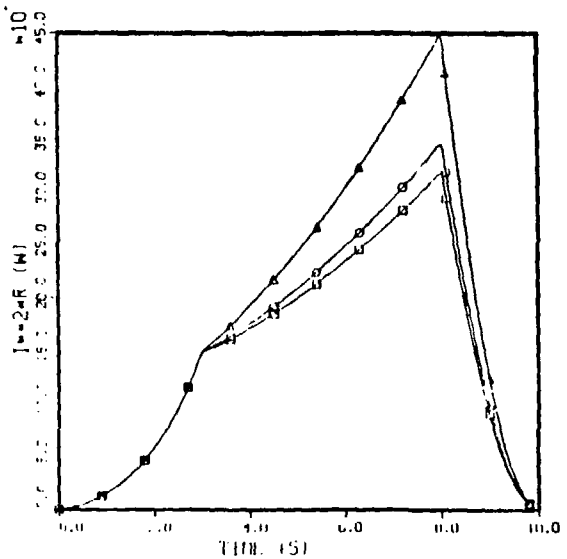

CDA-102 COPPER ALL OVER

CDA-102 COPPER ONLY IN THE VERTICAL LEG

CDA-155 COPPER ALL OVER

□ PEAK NUCLEAR HEATING = 0

o PEAK NUCLEAR HEATING = 20 MW/M^3

Δ PEAK NUCLEAR HEATING = 100 MW/M^3

TOTAL ELECTRIC POWER CONSUMPTION INCREASES WHEN PEAK NUCLEAR HEATING IS INCREASED.

ENERGY CONSUMPTION AS A FUNCTION OF COIL MATERIAL

CDA102 TF ENERGY

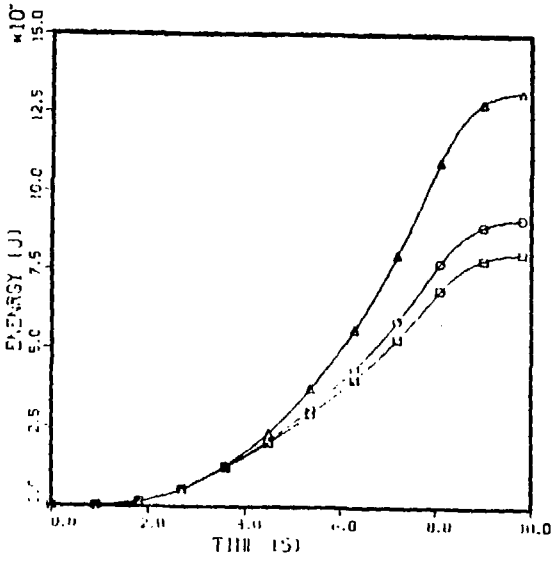

CDA102/155 TF ENERGY

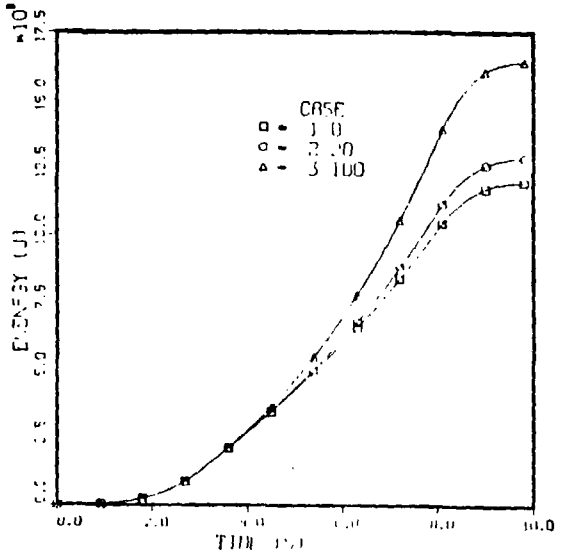

CDA155 TF ENERGY

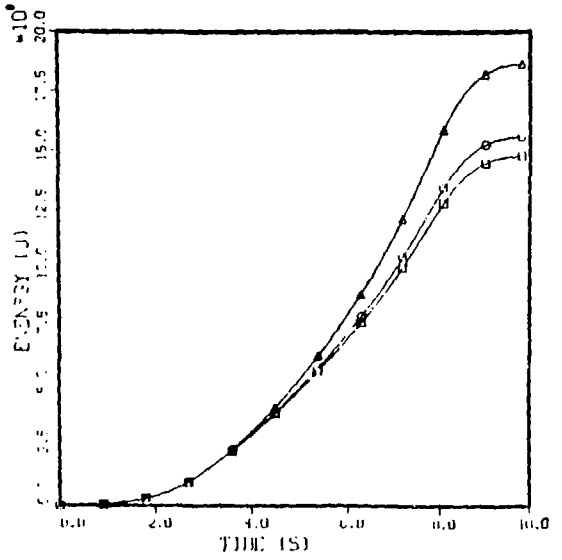

CDA-102 COPPER ALL OVER

CDA-102 COPPER ONLY IN THE VERTICAL LEG

CDA-155 COPPER ALL OVER

□ PEAK NUCLEAR HEATING = 0

o PEAK NUCLEAR HEATING = 20 MW/M^3

Δ PEAK NUCLEAR HEATING = 100 MW/M^3

TOTAL ELECTRIC ENERGY CONSUMPTION INCREASES WHEN PEAK NUCLEAR HEATING IS INCREASED.

MVA REQUIREMENT AS A FUNCTION OF COIL MATERIAL

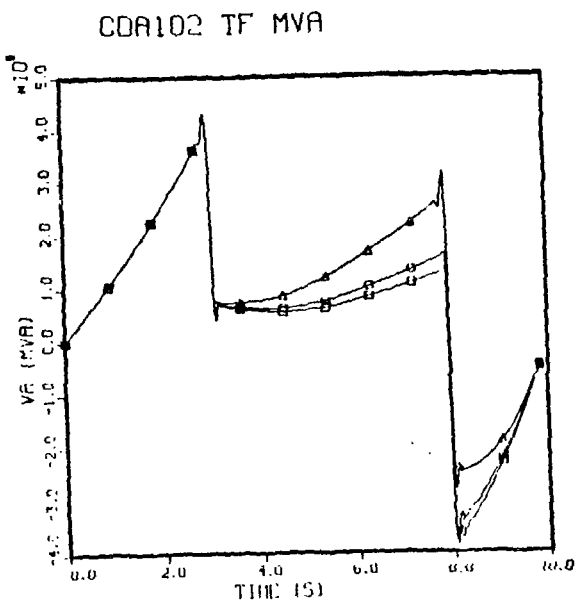

CDA-102 COPPER ALL OVER

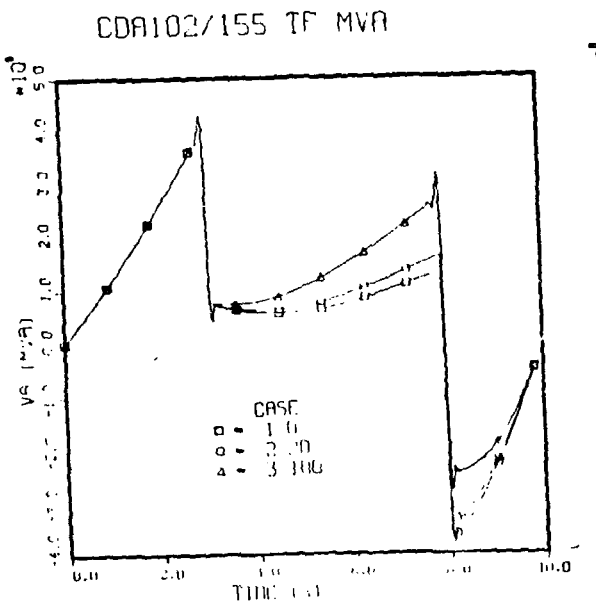

CDA-102 COPPER ONLY IN THE VERTICAL LEG

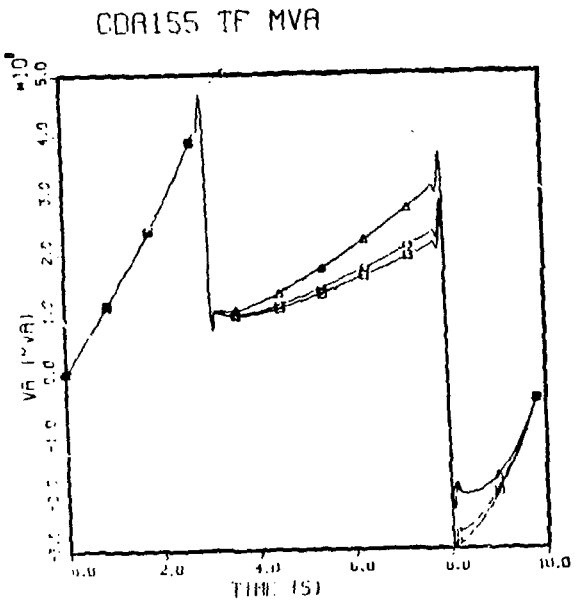

CDA-155 COPPER ALL OVER

□ PEAK NUCLEAR HEATING = 0

○ PEAK NUCLEAR HEATING = 20 MW/M^3

△ PEAK NUCLEAR HEATING = 100 MW/M^3

PEAK MVA REQUIREMENT IS ESTABLISHED BY THE TF CURRENT RAMP-UP REQUIREMENT.

STRUCTURAL ANALYSIS

1. *Comparison of 2-turn and 1-turn TF Coil*

2. *Evaluation Of TF Coil Plate For:*
   - *.Preload*
   - *.TF Forces*
   - *.Temperature*

Comparison of 2-turn and 1-turn TF Coil For Preload and TF Forces

- *Average Tresca Stress Higher For 2-turn*
- *Reaction Ring Loads and Stresses Higher For 2-turn*
- *Preload Tends To Concentrate On Innermost Turn Of Magnet Throat*
  - *75 Percent Of Preload Carried By This Turn*

PRELOAD + TF FORCES

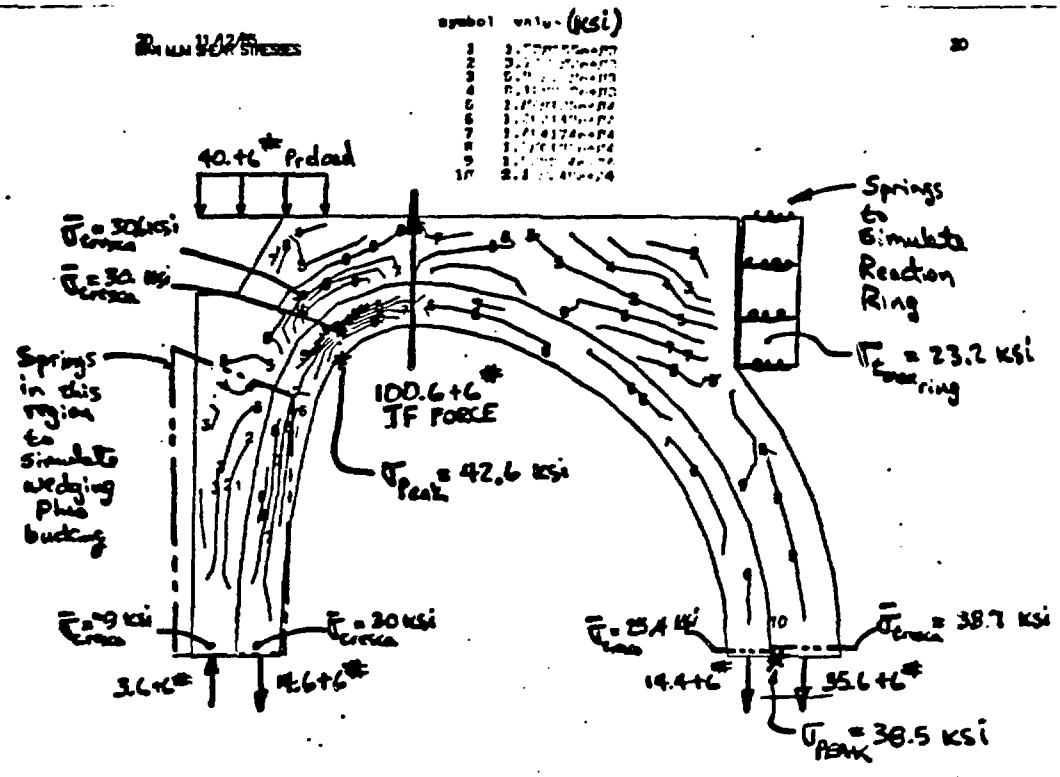

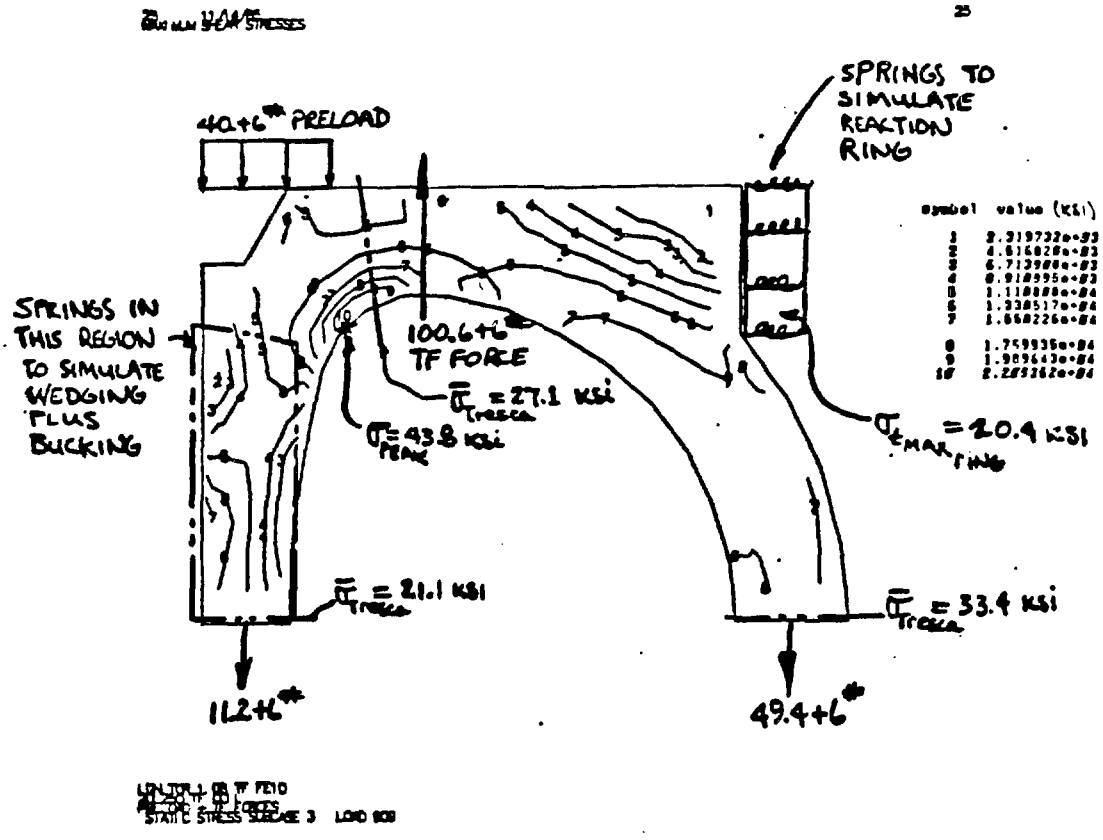

Evaluation Of TF Preload, TF Forces, and Temperature

- *Temperatures From Thermal Analysis, Kalsi*
  - *Ramp-up (3), Flat top (5), Ramp-down (2)*
  - *Material -CDA155*
  - *Evaluations at*
    - *Beginning-of-Burn*
    - *End-of-Burn*
    - *End-of-Cycle*
- *Temperatures Applied To Finite Element Model*
  - *Judgement Used To Estimate Finite Element Distribution*
- *Finite Element Model Is 2-D*
- *Stress Levels, Average and Peak, Acceptable, But Approaching CDA155 Limits*

CDA155 TF-CP ON-20

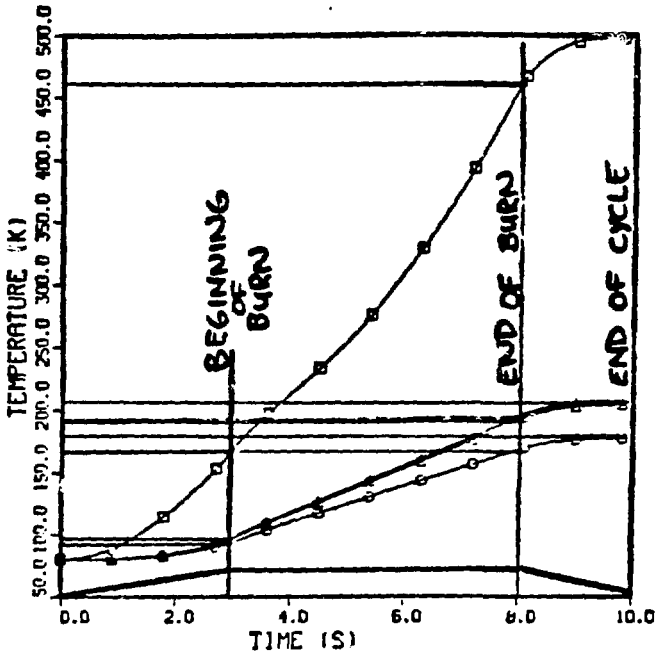

CASE
□ - 1 ARC - CENTER POST
○ - 2 ARC - INNER ARC
△ - 3 ARC - OUTER ARC
+ - 4 ARC - OUTBOARD LEG

11:54:52 11/12/85

TEMPERATURE PROFILE - ONE-HALF TURN

CDA155 TF-CP center post ON-20

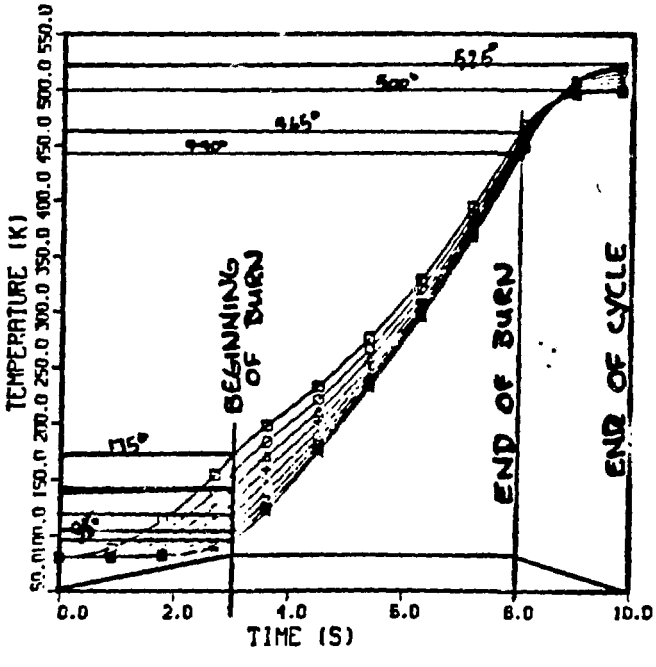

CASE
□ - 1 SECT - PLASMA SIDE
○ - 2 SECT
△ - 3 SECT
+ - 4 SECT
× - 5 SECT
◇ - 6 SECT
▽ - 7 SECT
■ - 8 SECT
× - 9 SECT - SOLENOID SIDE

11:25:23 11/12/85

TEMPERATURE PROFILE CENTER POST ONLY

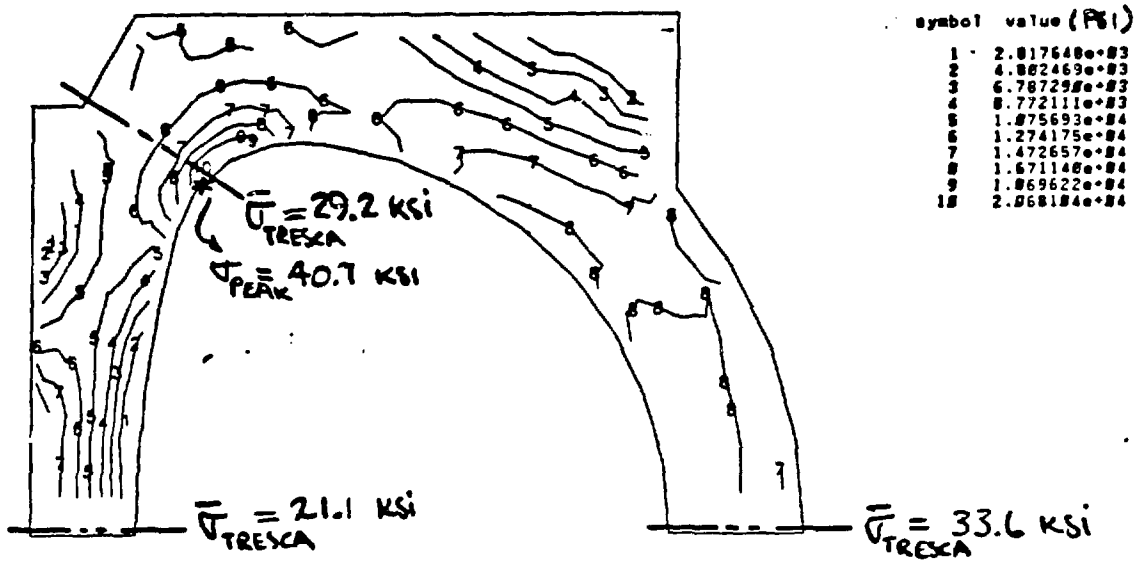

LDN TOP 1 DB TF FE10
PRELOAD + TF FORCES + TEMP (BEGINNING OF BURN)
STATIC STRESS SUBCASE 4 LOAD 909

MAX. SHEAR STRESS PLOT FOR PRELOAD + TF FORCES + TEMPERATURE AT BEGINNING OF BURN

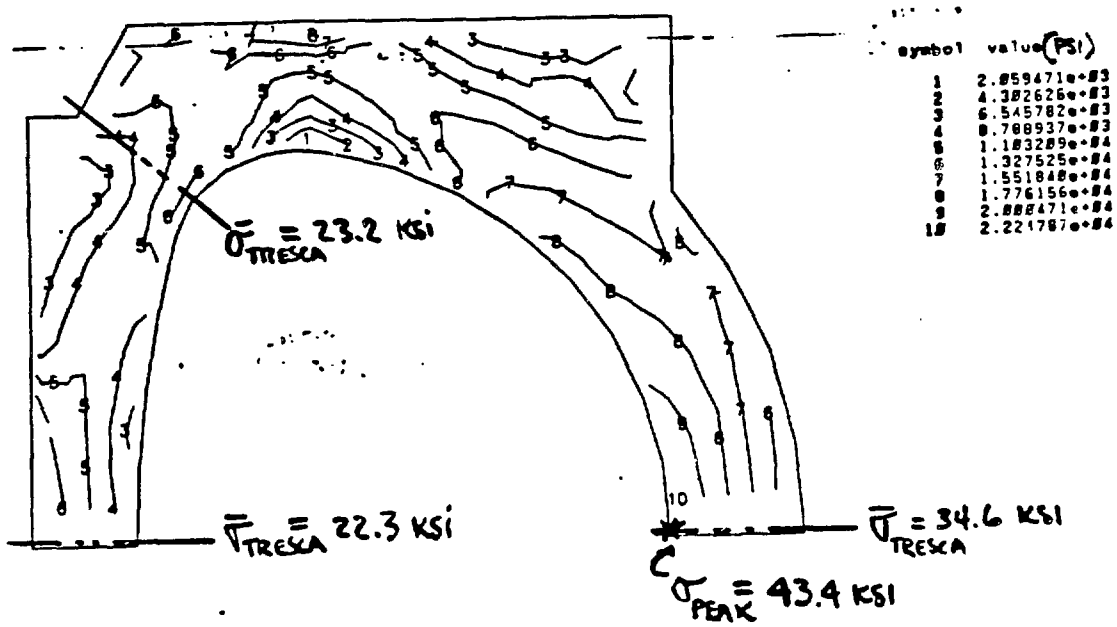

PRELOAD + TF FORCES +
TEMPERATURE @ END OF BURN

LONJTOR 1 DB TF FE10
PRELOAD + TF FORCES + TEMP2(END OF BURN)
STATIC STRESS SUBCASE 5 LOAD 909

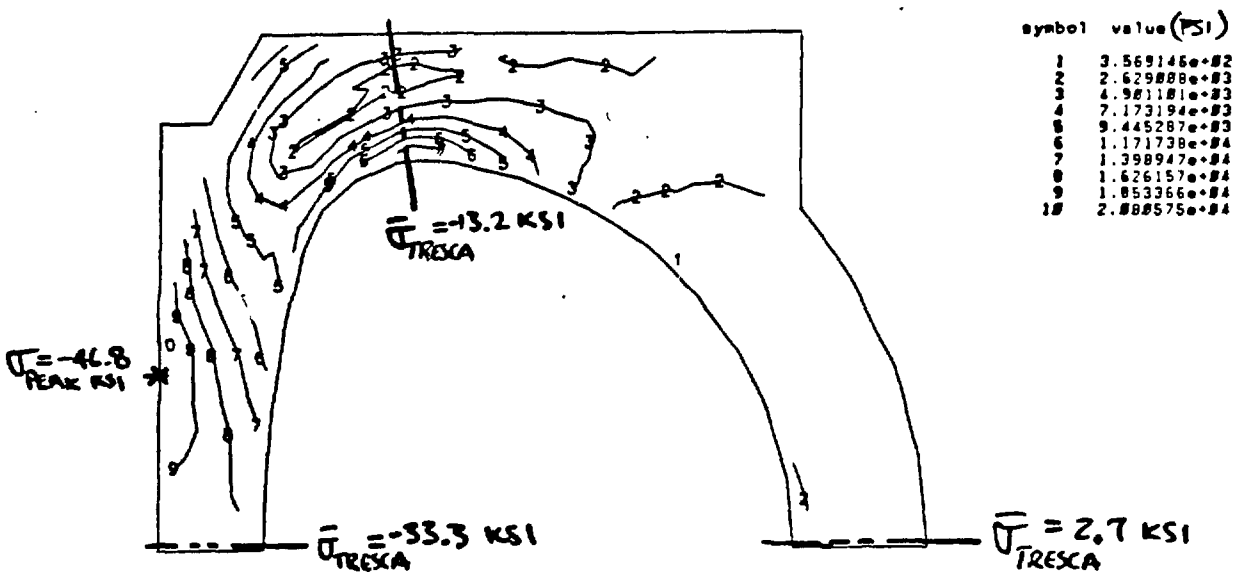

PRELOAD +
TEMPERATURE @ END OF CYCLE

LONJTOR 1 DB TF FE10
PRELOAD + TEMP3(END OF CYCLE)
STATIC STRESS SUBCASE 6 LOAD 600

COMPARISON OF MODEL WITH EXPERIMENTAL DATA ON COOLING TIME WITH LN_2

	MASS (TONNE)	COOLING SURFACE AREA (M^2)	COOLING TIME (H) MODEL[1]	COOLING TIME (H) EXPERIMENT
ALCATOR A	5.5	1.73	3.4	2-3
ALCATOR C[2]	18	5.5	5.8	5.2

1. THE MODEL IS FOR BARE COPPER SURFACE WITHOUT ANY INSULATION
2. ACTUAL NITROGEN CONSUMPTION IS 6.2 TONNE FOR COOLING DOWN TO 80 K. THE MODEL PREDICTS 6.6 TONNE.

VARIOUS METHODS OF COOLING INNER LEG

(WALL LOAD = 8.5 MW/M^2)

METHOD	COOLING TIME (H) (TO 80° K)	
	CDA-102	CDA-155
ACTIVE COOLING; NO CONDUCTION		
- COOLING CHANNEL AT PLASMA SIDE OF TF COIL INNER LEG (1)	2.2	2.4
- COOLING CHANNEL AT OH SIDE OF TF COIL INNER LEG (2)	6.3	6.9
- (BASED ON 50% AREA AVAILABLE FOR COOLANT)	2.8	3.0
NO ACTIVE COOLING, CONDUCTION ONLY		
- NO COOLING CHANNEL (COOLED BY CONDUCTION THROUGH OUTER LEG)	4.5	4.5

1. FOR BARE COPPER. APPROXIMATELY 50% INCREASE IN VALUES FOR 0.040 IN INSULATION

EFFECT OF CONDUCTION ON THE COOLING TIME OF INNER LEG[1]

(WALL LOAD = 1.7 MW/M^2)

METHOD	COOLING TIME (H)	
	CONDUCTION	NONCONDUCTION
COOLING CHANNEL INSIDE OF INBOARD AND OUTBOARD OF TF COIL (5% OF TOTAL AREA)	1.8 [2]	2.6

1. MATERIAL IS CDA-155 FOR BOTH INBOARD AND OUTBOARD LEGS.
2. THIS TIME WILL NOT REDUCE BY MUCH IF THE INBOARD MATERIAL SWITCHES TO CDA-102

FUSION ENGINEERING DESIGN CENTER

A SLIDING JOINT CONCEPT FOR TOROIDAL FIELD COILS OF A TOKAMAK

ORNL-DWG 85-3433FED

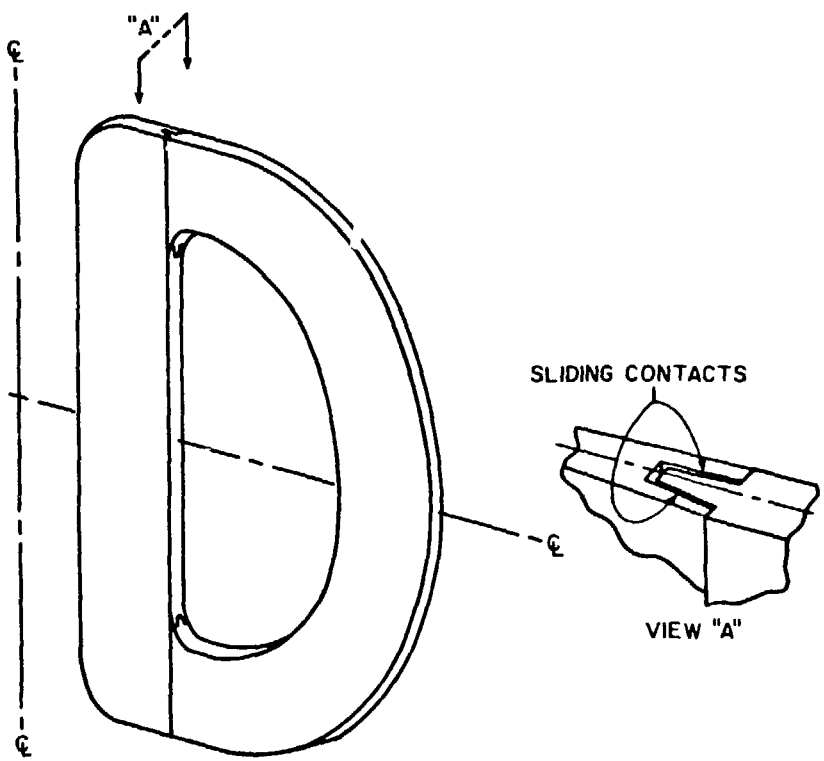

A TF COIL TURN WITH TWO SLIDING JOINTS.

ORNL-DWG 85-3434FED

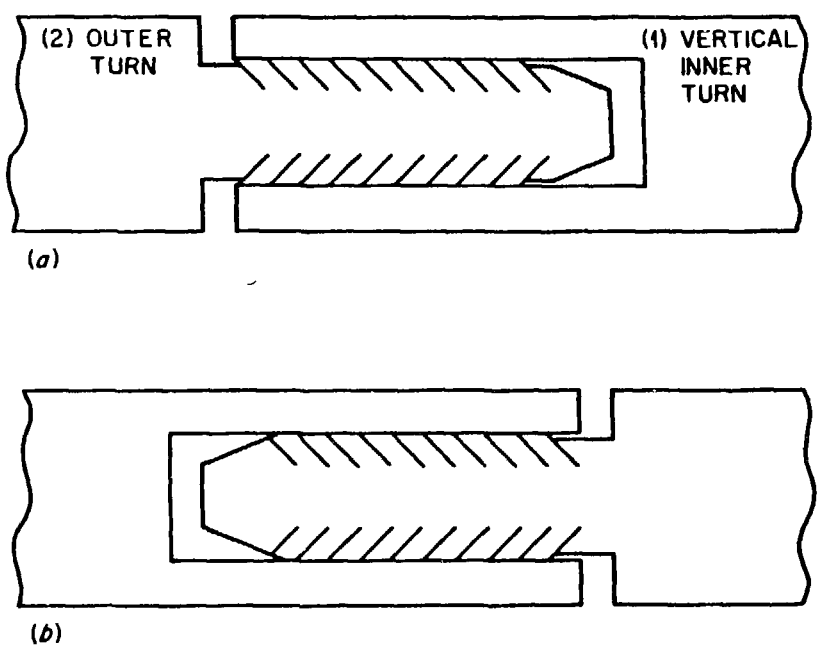

LAP JOINT CONFIGURATION.

THIS IS A POSSIBLE CONFIGURATION FOR UTILIZING FINGERJOINT CONCEPT IN A LAP JOINT

STATIC TEST RESULTS OF A HARD COPPER (BeCu) FINGER JOINT

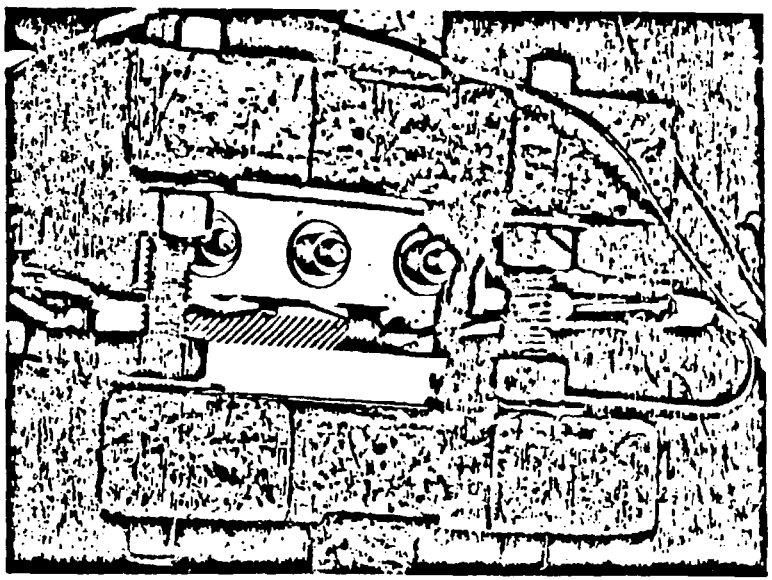

BeCu FINGER JOINT UNDER TEST

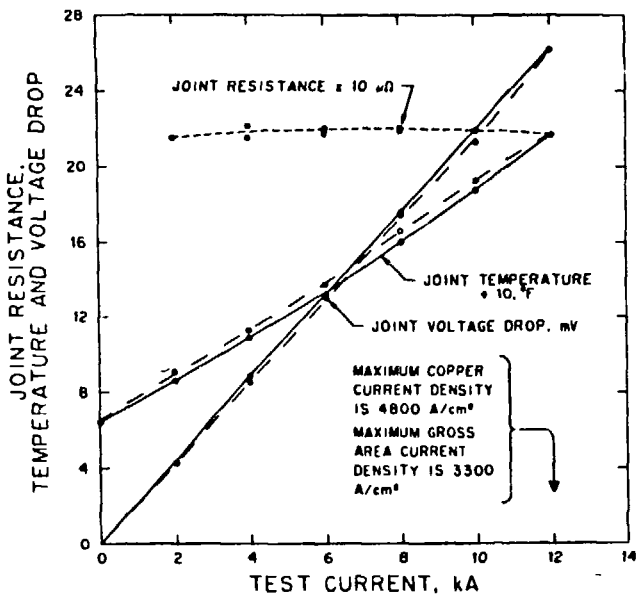

- THE FINGER JOINT WAS TESTED WITH ACTIVE WATER COOLING
- THE JOINT ACHIEVED A NET CURRENT DENSITY OF 3300 A/cm^2 IN THE STATIC MODE
- PEAK TEMPERATURE (216 F) OCCURS AT ROOT OF FINGERS
- THIS JOINT IS EXPECTED TO MEET PPPL ISP COIL REQUIREMENTS
- THE JOINT WILL BE SENT TO PPPL FOR TESTING IN THEIR TEST FACILITY

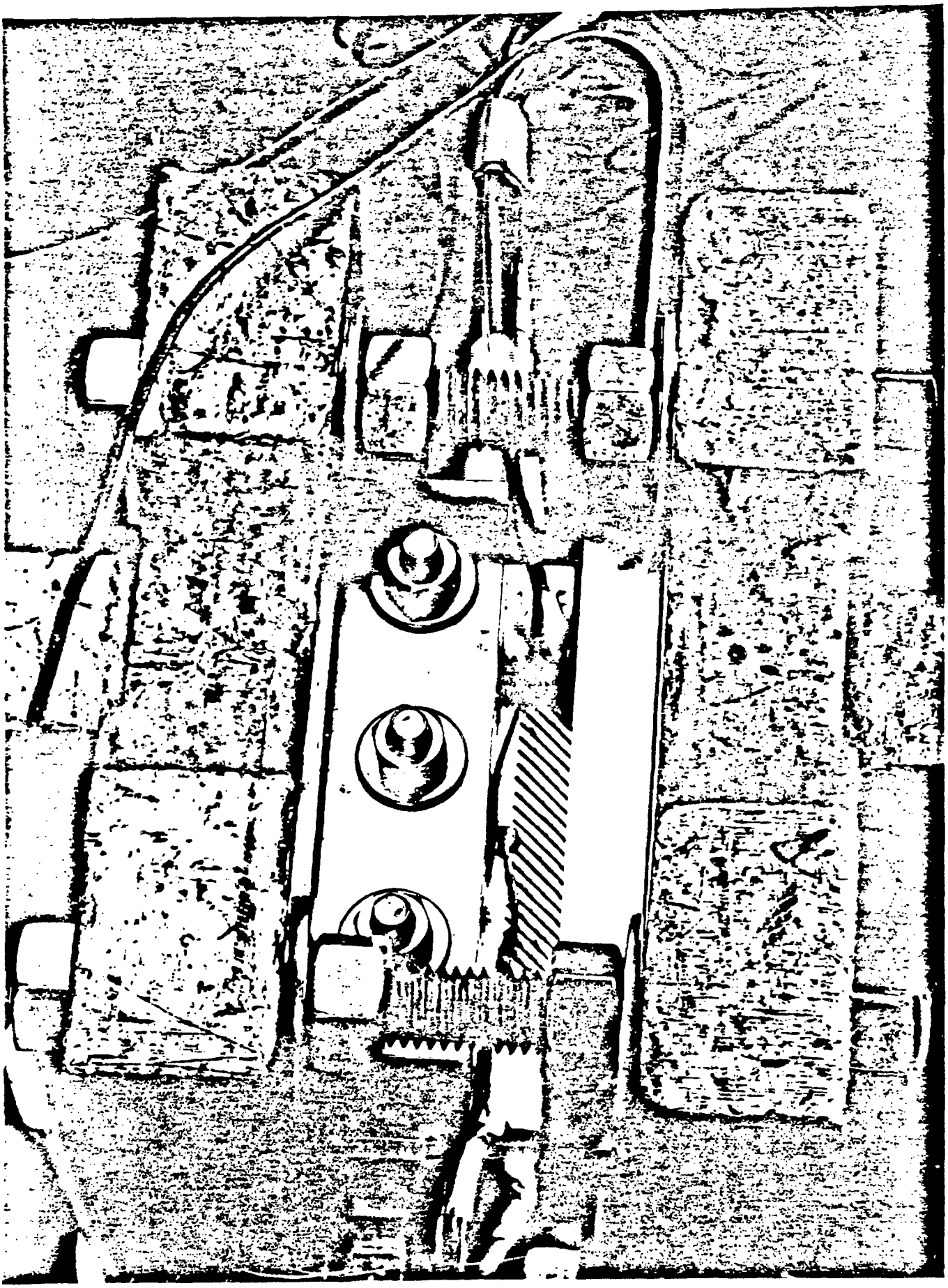

MAINTENANCE

THE MAINTENANCE PHILOSOPHY IS BASED ON REMOTE OPERATIONS IN THE TEST CELL AND CONTACT OPERATIONS IN THE EQUIPMENT CELLS

UTILIZATION OF
REMOTE MAINTENANCE
EQUIPMENT

3 PHASES OF
REACTOR
OPERATION

HYDROG.	D-D	D-T

REACTOR SHAKEDOWN OPERATIONS TO ELIMINATE INFANT MORTALITY PROBLEMS; MOCKUP TESTING OF REMOTE HANDLING EQUIPMENT

REPLACEMENT (OR REPAIR) IS PLANNED FOR LIFE-LIMITED COMPONENTS BY UTILIZING A MODULAR DESIGN APPROACH WITH SIMPLE, REMOTELY OPERABLE, INTERFACES

- ALL OPERATIONS IN THE TEST CELL ARE DONE REMOTELY AND INCLUDE
  - REPLACEMENT OF RF ANTENNAE AND SHIELDS
  - DECOUPLING OF DIAGNOSTIC AND FUELING PENETRATIONS
  - REMOVAL OF ALL PORT COVERS
  - REPLACEMENT/REFURBISHMENT OF FIRST WALL, MIRRORS, AND WINDOWS
  - IN-VESSEL/EX-VESSEL INSPECTIONS
  - EQUIPMENT ADJUSTMENTS/MODIFICATIONS AND VACUUM/COOLANT LEAK REPAIRS

- MAINTENANCE SCENARIOS <u>DO NOT INCLUDE</u> REPLACING MAJOR COMPONENTS WHICH ARE NOT AFFECTED BY WEAROUT (I.E., TF/PF/OH COILS, VACUUM VESSEL, STRUCTURE)
  - EXTENSIVE QUALITY ASSURANCE DURING FABRICATION AND INSTALLATION
  - CORRECTION OF EQUIPMENT INFANT MORTALITY PROBLEMS PRIOR TO TEST CELL ACTIVATION

THE IGNITOR REACTOR IS BEING DESIGNED AS A 60 TONNE MODULE WHICH IS FACTORY ASSEMBLED; THE OUTBOARD PF COILS AND THE PRELOAD STRUCTURE ARE INSTALLED ON SITE

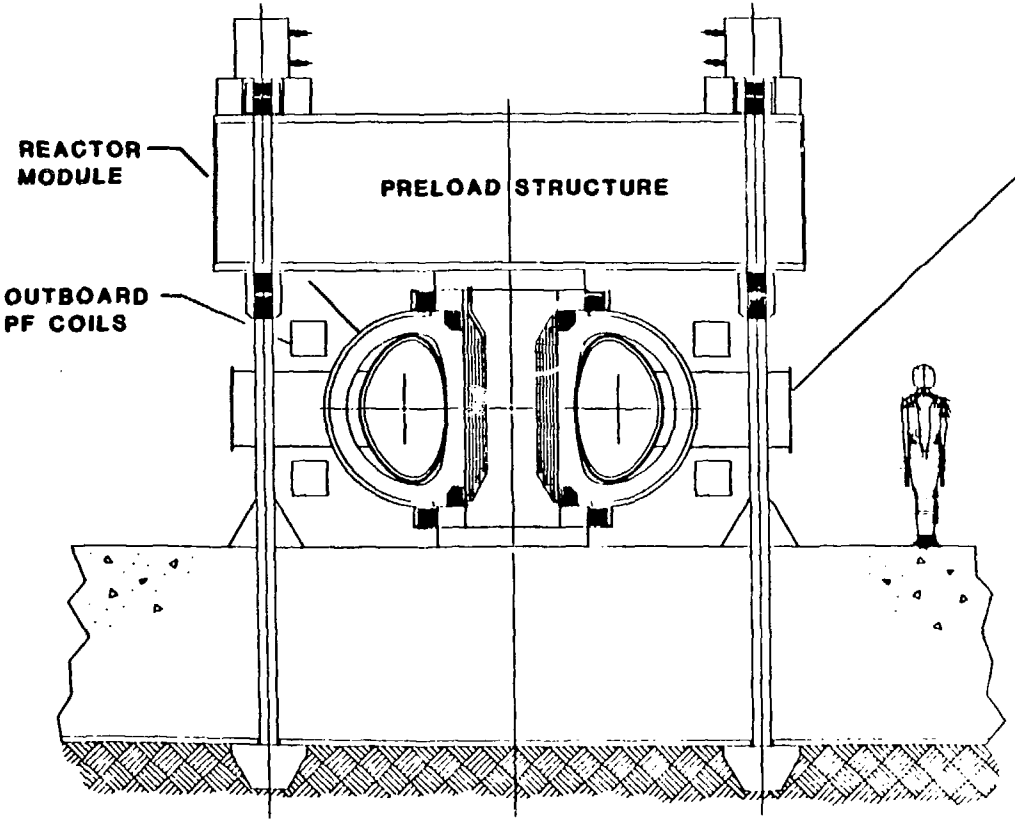

24 AVAILABLE VESSEL PORTS

- 2 FUELING
- 2 INSPECTION
- 2 VACUUM
- 5 RF
- 13 DIAGNOSTICS

FIRST WALL REPAIR

- THE IGNITOR PORT OPENINGS ARE 20 X 80 CM AND ARE SUFFICIENT FOR UNI-LATERAL MANIPULATORS OPERATING IN PAIRS THROUGH 12 (ALTERNATE) PORTS

MODIFICATIONS TO EXISTING MANIPULATOR

- REMOVE 1 ARM
- RE-ORIENT SHOULDER MOUNT 90°
- SHORTEN UPPER & LOWER ARM
- ADD FORCE REFLECTION

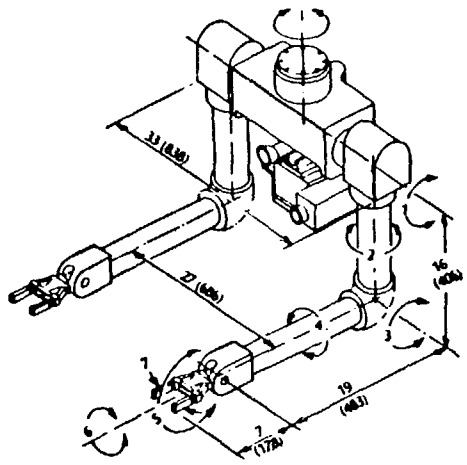

DIMENSIONS AND CAPACITIES

Upper Arm Length	406 MM	16 IN
Lower Arm Length	483 MM	19 IN
Extended Reach	1067 MM	42 IN
Maximum Tong Opening	64 MM	2.5 IN
Total Slave Assembly Weight	59 KG.	130 LB
Slave Arm Weight	21 KG.	47 LB
Lifting Capacity (Arm Horizontal)*	10 KG.	22 LB

*Variable–based on customer speed/load requirements.

A PRELIMINARY TEST CELL ARRANGEMENT WITH NO DEVICE SHIELD HAS BEEN DEVELOPED; BASED ON LAYDOWN AREAS, PERIPHERAL REACTOR EQUIPMENT SPACE, AND REMOTE OPERATIONS

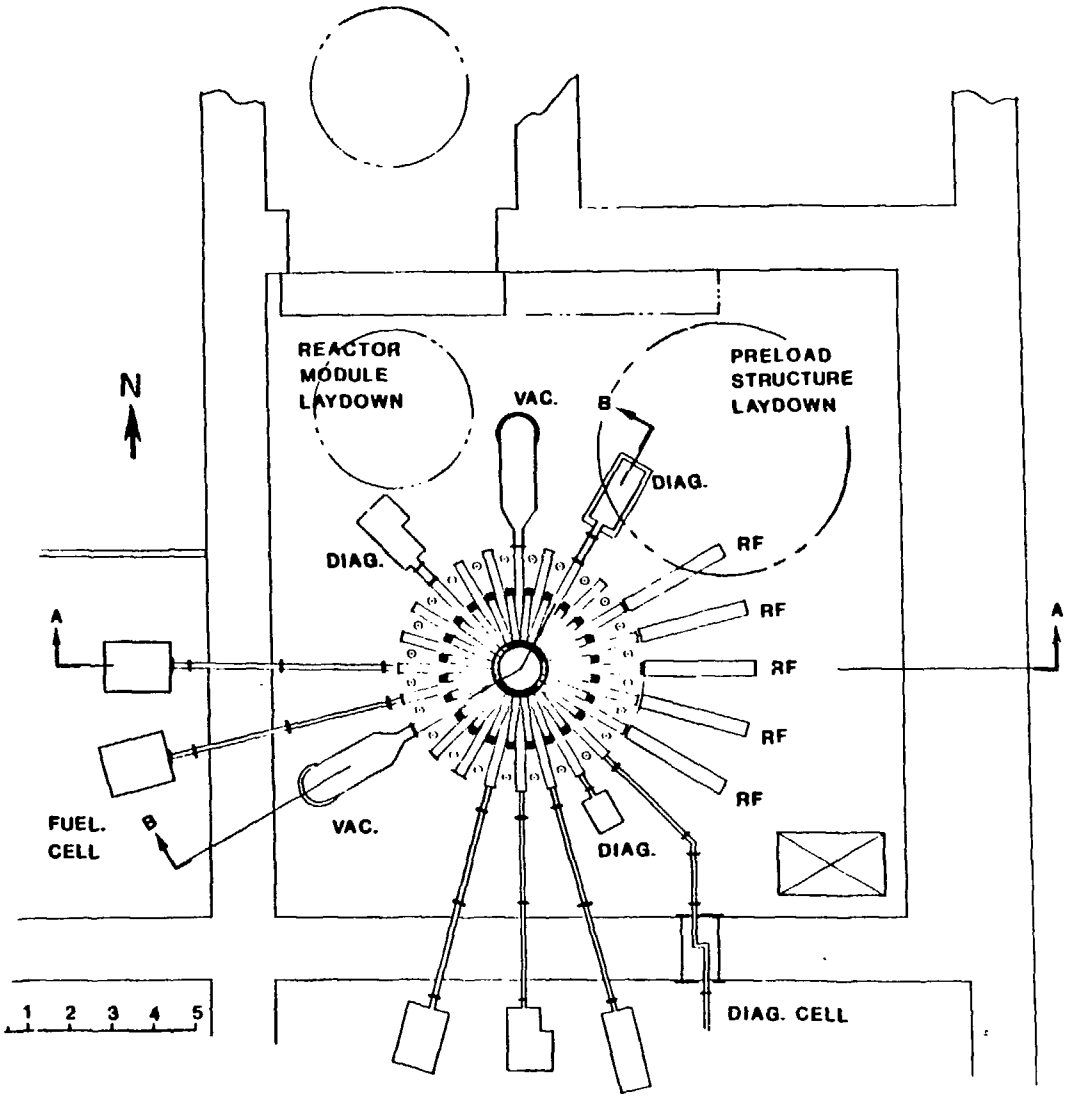

IGNITOR TEST CELL - GROUND LEVEL PLAN

- FUEL INJECTORS AND MOST DIAGNOSTICS LOCATED IN EQUIPMENT CELLS BEHIND TEST CELL SHIELD
- CERTAIN DIAGNOSTICS WILL BE IN THE TEST CELL; NORTH SIDE IS FOR LARGE DIAGNOSTIC EQUIPMENT
- TEST CELL SIZE IS 15L X 15 W X 16.5H

TEST CELL EQUIPMENT (I.E., CERTAIN DIAGNOSTICS AND RF) ARE REPLACED/REPAIRED IN-SITU; MOST EQUIPMENT IS OUT OF THE TEST CELL

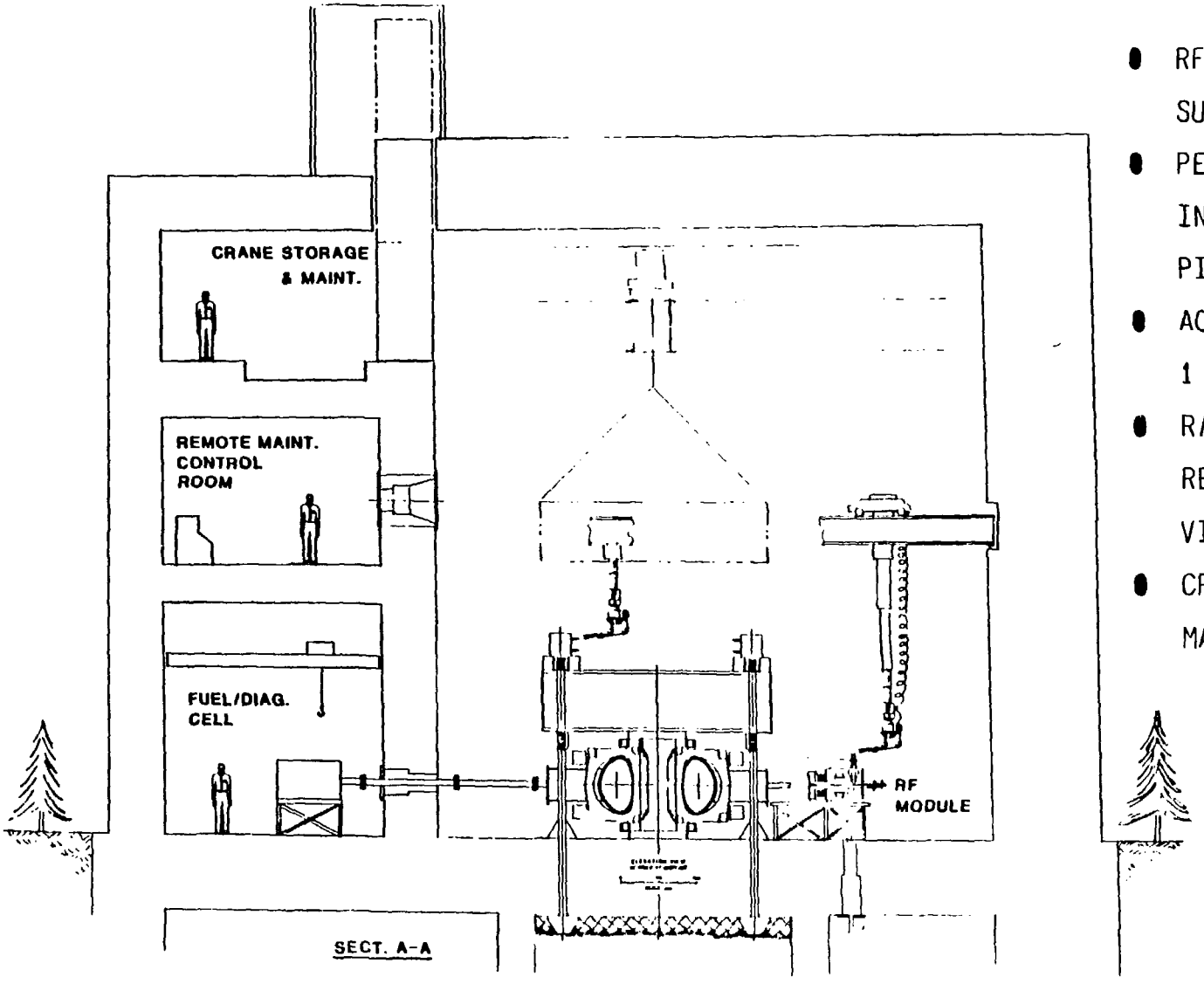

- RF MODULES ARE RAIL MOUNTED ON SUPPORT PLATFORMS
- PERIPHERAL EQUIPMENT INTERFACES UTILIZE DEMOUNTABLE PIPE COUPLINGS
- ACCESS TO EQUIPMENT CELLS 1 DAY AFTER SHUTDOWN (*)
- R/M OPERATORS SUPPLEMENT REMOTE VIEWING WITH DIRECT VIEWING
- CRANE SYSTEMS HAVE HANDS-ON MAINTENANCE

(*) NEUTRONIC ANALYSIS TO ESTABLISH SHIELD REQ'MTS & TO MAP ACTIVATION

CERTAIN DIAGNOSTIC EQUIPMENT WILL BE LOCATED IN THE TEST CELL

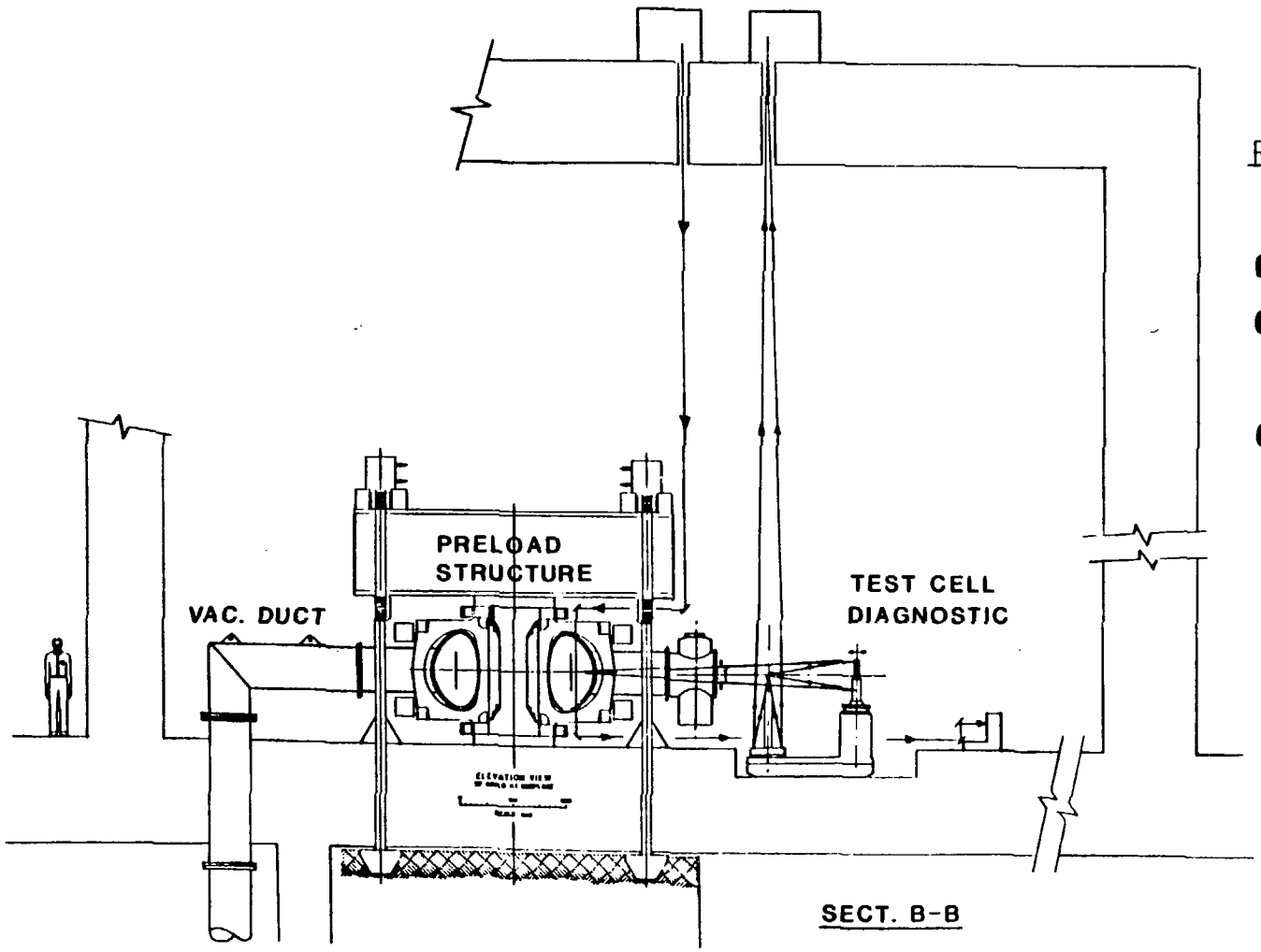

REQUIREMENTS

- ACCESS TO EQUIPMENT
- REPLACEABILITY OF IN-VESSEL & EX-VESSEL MIRRORS
- ACCESS TO PLASMA CHAMBER WINDOWS

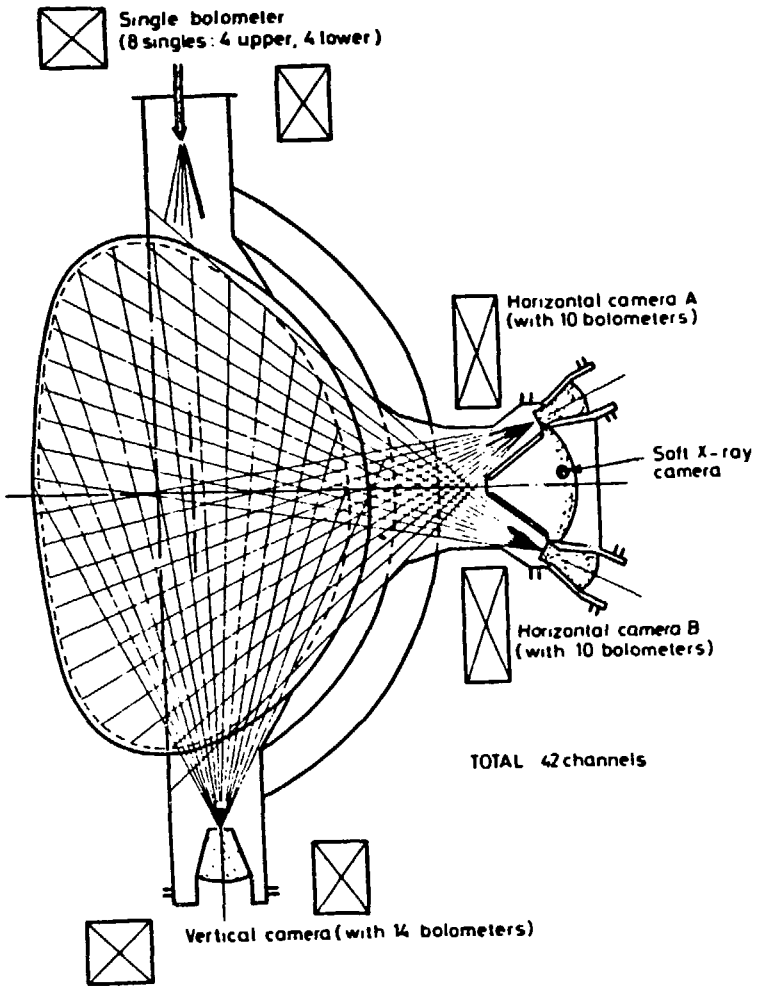

JET BOLOMETER (KB1) SHOWING THE TWO LATERIAL & ONE VERTICAL CAMERAS AND A TYPICAL SINGLE BOLOMETER

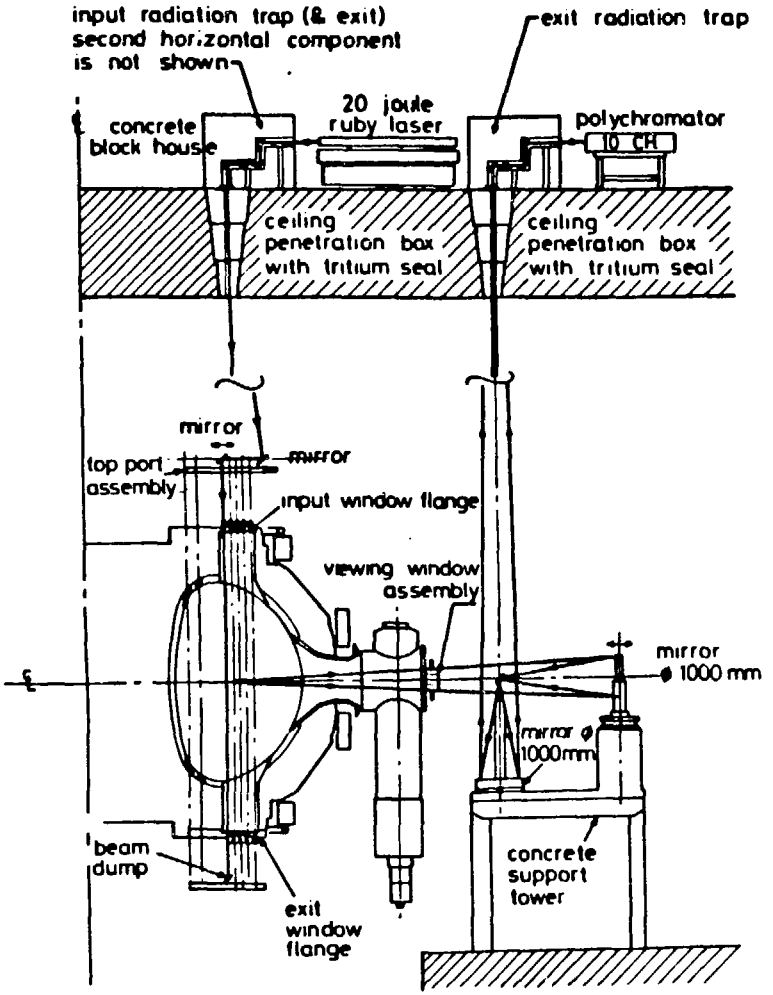

JET SINGLE POINT THOMSON SCATTERING SYSTEM (KE1)

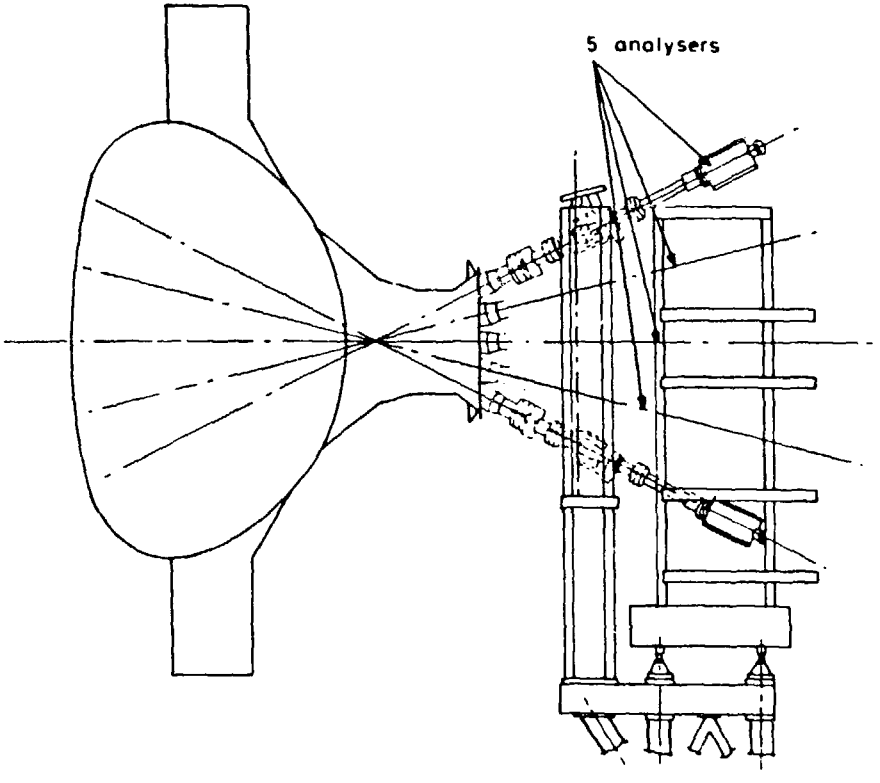

JET NEUTRAL PARTICLE ANALYZER ARRAY (KR1)

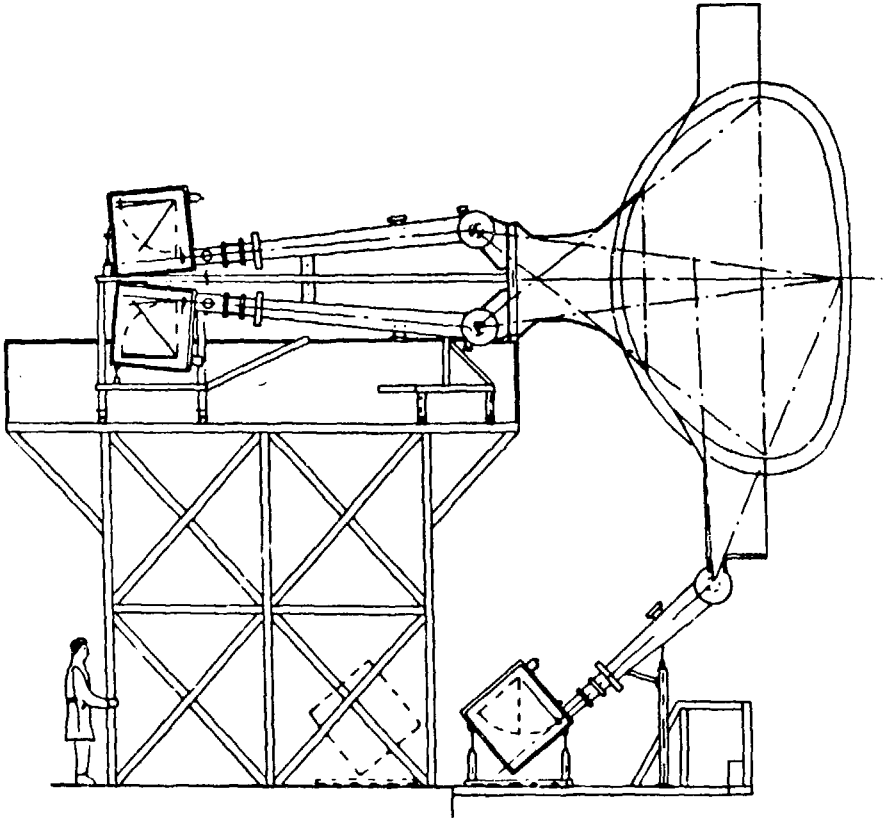

JET GRAZING INDIVIDUAL VACUUM
ULTRA-VIOLET SPECTROSCOPY (KT1)

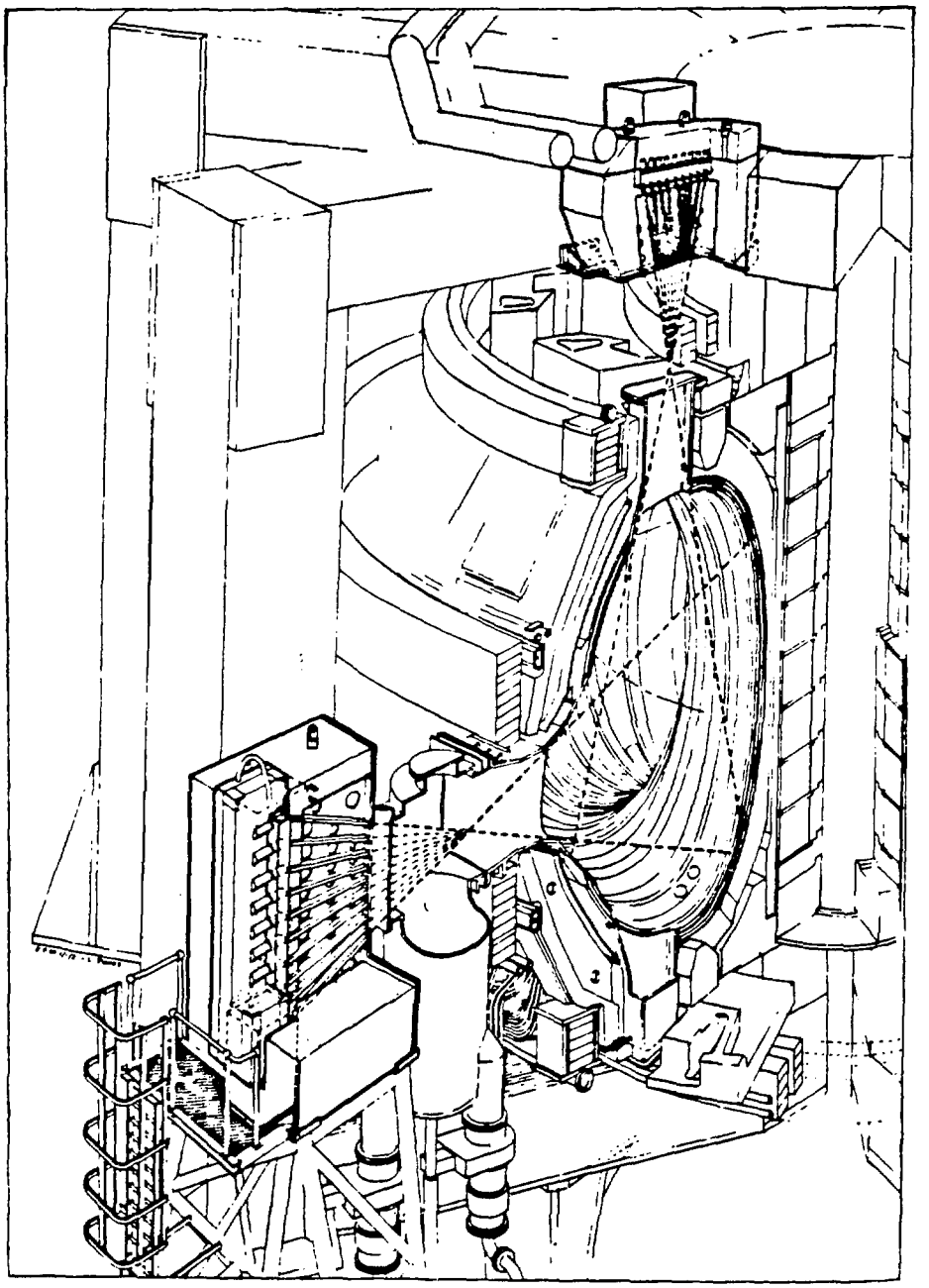

JET NEUTRON YIELD PROFILE MEASURING SYSTEM (KN3)