"The submitted manuscript has been authored by a contractor of the U.S. Government under contract No. DE-AC05-84OR21400. Accordingly, the U.S. Government retains a nonexclusive, royalty-free license to publish or reproduce the published form of this contribution, or allow others to do so, for U.S. Government purposes."

CONF-870883--1

THE ROLE OF STELLARATORS IN THE ADVANCED TOROIDAL PROGRAM*

CONF-870883--1

DE87 014815

John Sheffield
Fusion Energy Division
Oak Ridge National Laboratory
Oak Ridge, Tennessee 37831

Two features, inherent steady state capability and value to fundamental toroidal confinement research, are behind the renaissance of stellarators in the U.S. program. The centerpiece of this program is the Advanced Toroidal Facility (ATF), at ORNL, which is designed to study the role of well and shear, second stable region of beta, the role of electric fields in confinement, and steady state effects. This program of experiment and theory is part of a broader program which includes research at Auburn and Colorado Universities, NYU, PPPL, and the Universities of Texas, Washington and Wisconsin. In turn the U.S. stellarator program is part of a collaborative world program involving Australia, the EEC, Japan, and the Soviet Union. The goals of this program as discussed in the DOE-Magnetic Fusion Program Plan and in the Technical Program Activity, have two parts:

- Development of a better understanding of the underlying physics of toroidal devices.
- Development of the stellarator as a candidate reactor, and as a source of building blocks for other toroidal reactors, such as the tokamak-stellarator hybrid.

Toroidal systems, in which the magnetic field lines form closed, nested flux surfaces, are the mainline of research in magnetic fusion. An advantage of such systems is that the bulk of the charged particles in the plasma are constrained to follow orbits which keep them close to the flux surfaces. Since the fundamental cause of plasma loss is collisions between the particles, and the rate of loss depends also upon the extent of their radial motion, these constrained orbits have an inherently low rate of particle and energy loss. A second major loss of plasma is due to gross rearrangements of the plasma and confining magnetic field - instabilities. The subject of magneto-hydrodynamics describes this fluid-like behavior of the magnetized plasma. Two principle features of the magnetic field are used to constrain such gross motions: a twist in the magnetic field varying from the inside of the plasma to the outside – called "shear"; and a magnetic field structure, in which on average, the plasma 'sees' a field which increases towards the outside – a "magnetic well."

The quantity beta, which is the ratio of the plasma pressure to the magnetic pressure, is a measure of the quality of a confinement system. Values of beta around 10% are judged to be a minimum level for an attractive reactor. As plasma pressure is raised, the magnetic field is distorted and its properties are degraded, so that, in general a limiting pressure is reached at which the modified field can no longer contain the plasma stably. This is known

MASTER

*Research sponsored by the Office of Fusion Energy, U.S. Department of Energy, under Contract DE-AC05-84OR21400, Martin Marietta Energy Systems, Inc.

DISTRIBUTION OF THIS DOCUMENT IS UNLIMITED

as the first stable region of beta. However, there are conditions in which the increasing plasma pressure acts to improve the quality of the magnetic field configuration, and higher betas are possible. This higher beta region is known as the second region of stability.

Specific goals of the advanced toroidal program to realize the optimum confinement scheme are: to understand in detail the role of shear and well, by combined theoretical and experimental studies; to define the boundaries of the first stable beta region; to understand the influence of plasma profiles on confinement and stability; and to demonstrate the existence of the second stable region.

The tokamak is the front runner in a group of toroidal devices, which includes also the stellarator, reversed field pinch and compact tori. In the alternatives, a large part or even all of the field, is provided by a current flowing in the plasma. Plasma current is an efficient source of field in a fusion grade plasma, and the current may also be used to provide plasma heating. However, such devices have two disadvantages: the current can be a source of gross instability, called a disruption, in which the plasma is lost rapidly to the walls of the containment vessel; and the devices must either be operated in a pulsed mode with the current driven inductively by transformer action, or a non-inductive current drive will be necessary. Non-inductive drive may be necessary even in a pulsed system for control of the current to prevent disruptions.

The principle characteristic which distinguishes stellarators from the other devices, is that the confining magnetic field is generated entirely by coils external to the plasma. The stellarator is inherently steady state and can avoid disruptions and the added complexity of non-inductive current drive. This steady state capability is a positive feature for stellarator reactors.

On the debit side, in designs developed to date, the stellarator coil systems are relatively complex, because of the need to produce twisted field lines, compared to devices in which the twist is produced by a plasma current. Progress is being made in developing reactor-relevant coil systems. Recent conceptual reactor designs have involved refined coil configurations which have led to a factor of two reductions in reactor size for fixed electrical power output.

However, as a research device, the disadvantage of complexity of the coil system is outweighed by the advantage which the coils offer for detailed control of the magnetic field: the ability to vary well and shear and to make comparisons with theory.

During the past decade, mainly through work on the Heliotron-E device at Kyoto University and the WVII-A device at Garching, stellarators have achieved plasma parameters comparable to those achieved in similar scale tokamaks: confinement parameter $n\tau_E \sim 5 \times 10^{12} cm^{-3}.s$, temperatures $T_i, T_e \geq 1\ keV$, and average beta $< \beta > \simeq 2\%$. These results and complementary work in the Soviet Union, and U.S., notably at U. Wisconsin, NYU, ORNL, and PPPL, have led to a new generation of stellarators with improved features and greater flexibility. The ATF, developed at ORNL, has the ability to vary the magnetic well, magnetic shear, and to introduce a helical axis, to map out the boundaries of the first stable region of beta and theoretically, to give access to the second stable region. With its full complement of diagnostics, including a heavy ion beam probe built by RPI, it

will study plasma transport and electric field effects in the collisionless (reactor-like) region. Ultimately, it will be able to run in true steady state to test impurity and particle control, plasma edge effects, and secular effects which might impact confinement and beta. The new WVII-AS device at Garching will use modular coils, of interest to longer term stellarator evolution, in the study of the effects of transform in a shear-free system. Similar goals exist for the flexible heliac, a device invented at PPPL and improved by ORNL, versions of which are being built by CIEMAT, Spain, and at the Australian National University in Canberra. For the longer term, studies are underway on development of the WVII-X device in Garching, on a more compact version of ATF (ATF-II) at ORNL, and in Japan, on a device based on Heliotron-E, and ATF. The latter device, LHS, is a joint effort of the Japanese Universities, at a new site near Nagoya. These devices will provide a new understanding of toroidal plasmas, underpinning the development of attractive toroidal reactor designs.

1. *Magnetic Fusion Program Plan,* U.S. Department of Energy, Office of Energy Research, DOE/ER-0214, February 1985.
2. *Technical Planning Activity Final Report,* Argonne National Laboratory, ANL/FPP-87-1, January 1986.
3. *The Advanced Toroidal Facility,* Fusion Technology, Vol. 10, pp. 179-226, September 1986.

ORNL-DWG 85-3320 FED

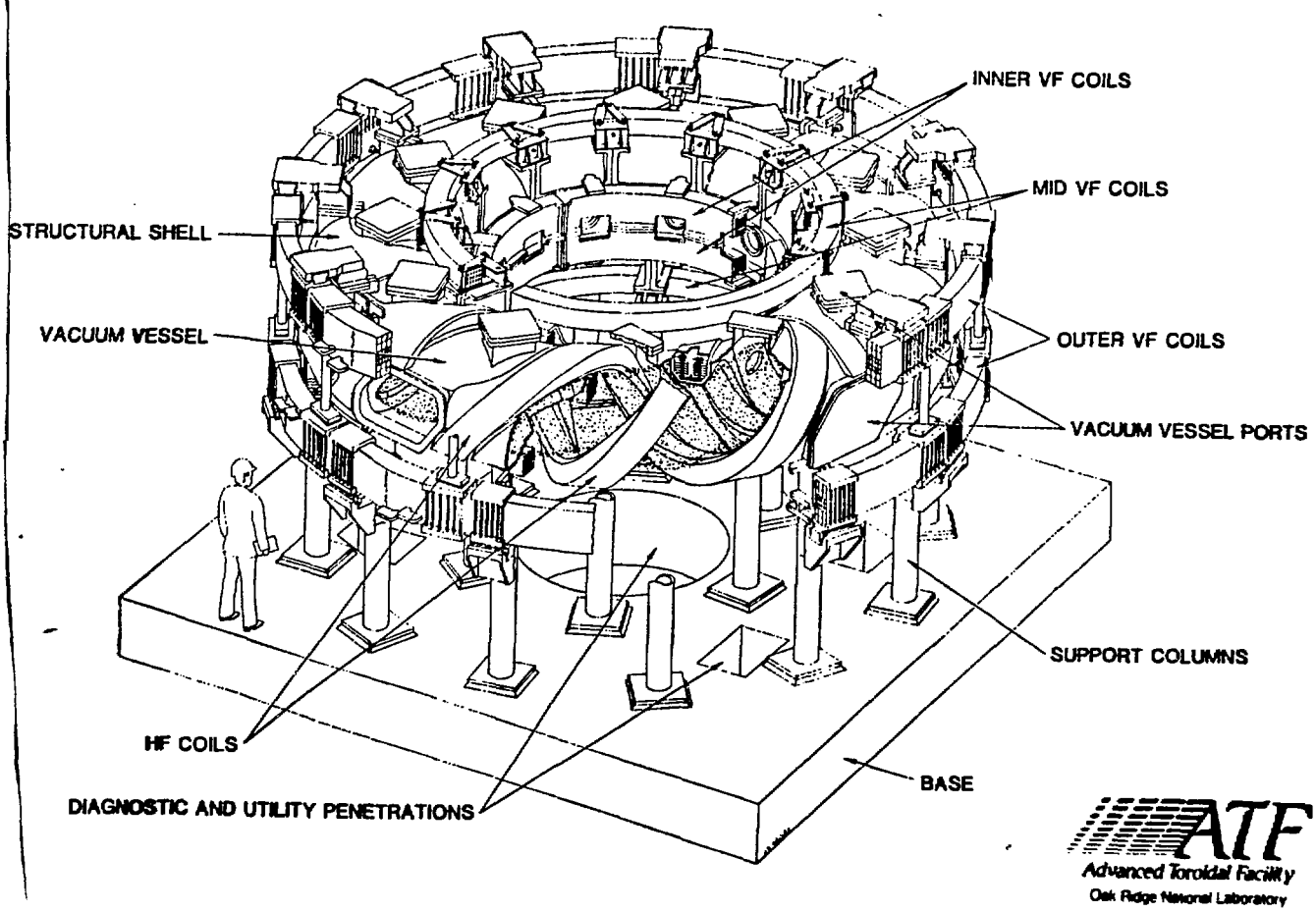

DISCLAIMER

This report was prepared as an account of work sponsored by an agency of the United States Government. Neither the United States Government nor any agency thereof, nor any of their employees, makes any warranty, express or implied, or assumes any legal liability or responsibility for the accuracy, completeness, or usefulness of any information, apparatus, product, or process disclosed, or represents that its use would not infringe privately owned rights. Reference herein to any specific commercial product, process, or service by trade name, trademark, manufacturer, or otherwise does not necessarily constitute or imply its endorsement, recommendation, or favoring by the United States Government or any agency thereof. The views and opinions of authors expressed herein do not necessarily state or reflect those of the United States Government or any agency thereof.