FUSION ENGINEERING DESIGN CENTER

CONF-851102--101

CONF-851102--101

DE86 007227

Compact Ignition Tokamak Program

R & D NEEDS

MASTER

C.A. Flanagan
For The FEDC Staff
Austin, Texas
November 18, 1985

By acceptance of this article, the publisher or recipient acknowledges the U.S. Government's right to retain a nonexclusive, royalty-free license in and to any copyright covering the article.

*RESEARCH SPONSORED BY THE OFFICE OF FUSION ENERGY, U.S. DEPARTMENT OF ENERGY, UNDER CONTRACT NO. DE-AC05-84OR21400 WITH MARTIN MARIETTA ENERGY SYSTEMS, INC.

DISTRIBUTION OF THIS DOCUMENT IS UNLIMITED

R&D DATA SHEET

1. **R&D Item**

SEGMENTED VACUUM VESSEL JOINT DEVELOPMENT

2. **Description of Problem/Need** VACUUM VESSEL INBOARD WALL MUST BE MINIMUM THICKNESS, AND ALSO MUST BE AN ACCURATE MOUNTING SURFACE FOR BUMPER LIMITER TILES. THE THINNEST JOINT CONCEPTS REQUIRE IN-SITU WELDS, WHICH CAN INDUCE UNACCEPTABLE WARPAGE AND LIMITER MISALIGNMENT. SEGMENTED VESSEL JOINTS MUST BE TESTED TO SHOW CONCEPT FEASIBILITY.

3. **Justification for Near-Term Program**

TILE ADJUSTMENT CAPABILITY IS LIMITED, AND REQUIREMENT DEPENDS ON AMOUNT OF WELD WARPAGE AND OTHER MANUFACTURING TOLERANCES. MAXIMUM HEAT LOAD ON TILE, SPACE ENVELOPE FOR PLASMA CHAMBER, AND DEVICE RELIABILITY ALL DEPEND ON ABILITY TO CONTROL AND PREDICT MISALIGNMENT OF THE BUMPER LIMITER.

4. **R&D Program Description**

VACUUM VESSEL JOINTS WITH MINIMUM SPACE ENVELOPE REQUIREMENTS WILL BE TESTED. METHODS TO CONTROL AND PREDICT WARPAGE WILL BE DEVELOPED AND THE EFFECTIVENESS DEMONSTRATED. REQUIREMENTS FOR TILE ADJUSTMENT WILL BE ESTABLISHED, ALONG WITH DEMONSTRATION OF LOW-PROFILE JOINT CONCEPT FEASIBILITY. METHODS OF POST-WELD INSPECTION WILL BE DEMONSTRATED.

DISCLAIMER

This report was prepared as an account of work sponsored by an agency of the United States Government. Neither the United States Government nor any agency thereof, nor any of their employees, makes any warranty, express or implied, or assumes any legal liability or responsibility for the accuracy, completeness, or usefulness of any information, apparatus, product, or process disclosed, or represents that its use would not infringe privately owned rights. Reference herein to any specific commercial product, process, or service by trade name, trademark, manufacturer, or otherwise does not necessarily constitute or imply its endorsement, recommendation, or favoring by the United States Government or any agency thereof. The views and opinions of authors expressed herein do not necessarily state or reflect those of the United States Government or any agency thereof.

R&D DATA SHEET

1. **R&D Item**

FIRST WALL TILE ATTACHMENT

2. **Description of Problem/Need**

IGNITION DEVICE REQUIRES A TILE ATTACHMENT SCHEME WHICH SATISFIES THE FOLLOWING REQUIREMENTS:

A. TILES MUST BE REMOTELY REPLACABLE IN A REASONABLE SCHEDULE.
B. ATTACHMENTS MUST WITHSTAND THERMAL AND MECHANICAL LOADS DURING DISRUPTION
C. THERMAL CONTACT WITH COOLANT MUST BE PREDICTABLE.
D. TILES MUST BE ADJUSTABLE TO ALIGN SURFACE WITH PLASMA EDGE
E. HARDWARE MUST HAVE ACCEPTABLE VACUUM PROPERTIES.
F. TILE GEOMETRY MUST ADEQUATELY PROTECT THE VACUUM VESSEL.

3. **Justification for Near-Term Program**

Establishing the feasibility of a remotely maintainable tile attachment concept is essential for proceeding with Title I for the Ignition Device. The feasibility, in turn, will determine the risk of operating the device at full power and pushing plasma parameters close to disruption thresholds. Therefore, the tile attachment R&D is a major item establishing the usefulness and productivity of the ignition experiment. Finding an effective concept is essential to the ultimate success of the experimental program.

4. **R&D PROGRAM DESCRIPTION**

THE R&D PROGRAM WILL INCLUDE THE FOLLOWING ELEMENTS:

A. DEVELOPMENT OF REMOTELY MAINTAINABLE TILE ATTACHMENT CONCEPTS.
B. TESTS OF THERMAL CONTACT CONDUCTANCE TO DETERMINE SENSITIVITY TO DESIGN PARAMETERS AND OPERATING CONDITIONS.
C. VACUUM TESTING OF MATERIALS AND COMPONENTS TO ESTABLISH COMPATIBILITY WITH PLASMA CHAMBER REQUIREMENTS.
D. DEVELOPMENT AND PROOF TESTING OF METHODS FOR TILE LOCATION MEASUREMENT AND ADJUSTMENT.*
E. TILE ATTACHMENT SYSTEM HARDWARE TESTING, INCLUDING STRUCTURAL AND THERMAL CAPABILITY TESTS.
F. TILE GEOMETRY OPTIMIZATION AND TESTING.
G. REMOTE HANDLING FUCTIONAL TESTS.

* REQUIREMENT FOR TILE ADJUSTMENT WILL BE DETERMINED BY R&D ON SEGMENTED VACUUM VESSEL JOINTS.

11/12/85

R&D DATA SHEET

1. R&D Item

FIRST WALL / TILE DEVELOPMENT — COMPOSITE MATERIAL

2. Description of Problem/Need

DISRUPTION CONTROL ON AN IGNITION DEVICE CANNOT BE ASSUMED. ENGINEERING ANALYSIS INDICATES PROBABLE DAMAGE TO TILES IN A DISRUPTION WHICH IS LOCALIZED ON A SMALL AREA OF TILES. CONVENTIONAL GRAPHITE TILES ARE BRITTLE AND CAN FRACTURE IN ONE CYCLE OF OVERLOADING.

3. Justification for Near-Term Program

TOUGHER TILE MATERIALS CAN INSURE ACCEPTABLE DISRUPTION RESISTANCE IN AN IGNITION EXPERIMENT WHICH LACKS DISRUPTION CONTROL. IMPROVED TOUGHNESS INCREASES MACHINE AVAILABILITY AND REDUCES NEED FOR RAPID TILE REPLACEMENT SYSTEM.

4. R&D Program Description

In order to provide a data base on materials for lining of the Ignition Device plasma chamber prior to Title I, an R&D program should be established. Present limiter experience shows limitations from thermal damage, erosion of surfaces and possibly high retention of tritium for bare graphite. A major concern is that of limiter tile structural integrity when exposed to major disruptions. Fracture and loss of individual tiles could result in extended downtime due to the requirement to use remote maintenance equipment for replacement. Also, the Ignition Device will employ tritium and its retention, transport and permeation in the plasma chamber components is an important

R&D DATA SHEET

1. R&D Item

VACUUM LEAK DETECTION

2. Description of Problem/Need

Vacuum leaks in the primary vessel wall can provide a sufficient impurity influx such that fusion ignition conditions cannot be achieved. Because remote maintenance of the Ignition Device is required, new techniques for leak detection will be necessary. The development and demonstration of an acceptable remote leak detection system is a feasibility issue for the Ignition DEVICE.

3. Justification for Near-Term Program

LEAK DETECTION METHOD AND DESIGN CONCEPT FOR VACUUM VESSEL AND FIRST WALL ARE HIGHLY INTERACTIVE. SPACE ENVELOPE FOR PLASMA CHAMBER CAN BE EFFECTED BY LEAK DETECTION CONCEPT, AND THIS IMPACTS MAJOR RADIUS OF TOKAMAK AND OVERALL COST.

4. R&D Program Description

An R&D task is required for the development of new techniques for leak detection. Although careful vessel design can facilitate the location of many vacuum leaks, others can only be located by in situ measurements. Remote leak detection techniques such as particle "telescope", photon detection using glow discharge cleaning, and acoustic location will be investigated.

R&D DATA SHEET

1. R&D Item

High frequency rf sources (90-200 MHz).

2. Description of Problem/Need

Depending on the heating mode chosen or favored, varying amounts of R&D will be needed to develop/test rf sources. A 200 MHz tetrode does not presently exist but is in the prototype stage. Choosing this frequency would require a ~2 year tube development time compared to ~1/2 year for a 130 MHz tube.

3. Justification for Near Term Program

Choice of the higher frequencies (150-220 MHz) for physics reasons would require a relatively agressive R&D program to have sources available when needed.

4. R&D Program Description

Tube manufacturer (EIMAC) to test, redesign and otherwise develop a 1-2 MW tetrode to operate in the frequency range of 150-220 MHz. This would involve analytic modeling as well as prototype testing prior to manufacturing the tube.

R&D DATA SHEET

1. R&D Item

Faraday shield development.

2. Description of Problem/Need

Need Faraday shield design that is efficient and able to survive the environment (plasma bombardment, neutron flux, disruption forces) and perform well but not increase the impurity influx.

3. Justification for Near Term Program

A good program exists at ORNL and must continue with its focus on improved designs suitable for the harsh environment of CIT. Materials and fabrication techniques should be investigated beyond those already tested.

4. R&D Program Description

1. Extend antenna modeling codes to include the effects of Faraday shield on coupled flux.

2. Test new designs and materials for survivability as well as low impurity influx.

3. Develop fabrication techniques for new materials/coating materials as necessary.

R&D DATA SHEET

1. R&D Item

Design and testing of rf launchers for high power, long pulse operation.

2. Description of Problem/Need

RF launchers typically experience breakdown which limits their voltage and power handling capability. These phenomena (arcing, multipactoring) cannot be reliably predicted today.

3. Justification for Near-Term Program

Development of a reliable rf launcher with high rf efficiency is an iterative (design-testing-design...) process which will require all available time to produce a reliable launcher. The testing program must be coupled to both plasma-coupling theory and rf design theory as well. Modeling capabilities must be developed in parallel with the initial design and testing phase to give the necessary tools to complete the design on schedule.

4. R&D Program Description

1. Three-dimensional modeling of launcher both in vacuum and coupled to a plasma.

2. Prototype launcher fabrication and testing at a wide range of voltages and frequencies. Redesign and retest to solve problems such as multipactor. Map parameter range of acceptable operation. Simulate actual conditions as far as possible (magnetic field, vacuum, etc.).

3. Test launchers (perhaps only the final design) into plasma of similar properties as CIT and determine voltage/power limitations and sensitivity to plasma conditions.

4. Test/develop coatings to reduce arcing and multipactor problems.

R&D DATA SHEET

1. R&D Item

Radiation hardened, low loss, dielectric windows for rf, IR, visible, UV and X-rays (lenses are also considered to be windows)

2. Description of Problem/Need

RF power coax lines must penetrate into the vacuum vessel

ECH, IR, visible, UV, and X-ray diagnostic radiation must penetrate the vacuum vessel at some location. Different materials are needed for various radiations.

3. Justification for Near Term Program

Physics panel concluded they want all the diagnostics that exist on TFTR plus more for alpha and neutron measurements.

4. R&D Program Description

Select best known materials for transmitting these radiations. Construct windows and measure transmission loss vs integrated dose using existing nuclear fission test facilities.

R&D DATA SHEET

1. R&D Item

Radiation resistant mirrors

Mirrors (both plane and concave) for changing direction and focusing IR, visible and UV radiation

2. Description of Problem/Need

Many diagnostics analyze optical radiations for plasma measurements. The radiation must be transmitted through radiation shields via off-sets.

3. Justification for Near Term Program

Many diagnostics proposed for ignition experiments use active or passive optical radiation. The electronic processing must be shielded from radiation, especially if frequent tuning (calibration) is necessary.

4. R&D Program Description

Select suitable mirror materials for IR visible and ultraviolet radiation. Test mirrors made of these materials to determine transmission loss as a function of integrated dose rate. Use existing nuclear test facilities.

R&D DATA SHEET

1. R&D Item

Radiation resistant optical dielectric wave guide

2. Description of Problem/Need

Dielectric wave guide is currently used for transmitting many optical signals for plasma profile measurements in a TFTR or JET environment.

3. Justification for Near Term Program

To determine the transmission loss of optic fibers when subjected to an integrated dose rate typical of that for ignition experiments. Is it feasible to use optic fibers for pulsed ignition tokamaks, and under what conditions?

4. R&D Program Description

Develop radiation resistant commercial fibers and measure transmission losses in an existing nuclear test facility.

R&D DATA SHEET

1. R&D Item

Radiation resistant HV insulation for diagnostic magnetic pickup coils

2. Description of Problem/Need

Several magnetic diagnostics have relatively high indured voltages and require high voltage insulation that must operate in a high nuclear radiation field.

3. Justification for Near Term Program

Magnetic diagnostic loops and coils are needed for measuring plasma current, plasma position, and plasma shape. The first two are mandatory for controlling the reactor.

4. R&D Program Description

Select most promising insulators and determine whether they are adequate. Use existing nuclear test facilities.

R&D DATA SHEET

1. R&D Item

Compact radiation and/or magnetic shielding for in-vault diagnostics that need some attenuation to reduce S/N ratio.

2. Description of Problem/Need

Some diagnostics require wide-angle profile line-of-sight measurements requiring large penetrations or windows, and must be mounted close to the plasma. Interfering magnetic and unwanted radiation must be attenuated within a very limited space.

3. Justification for Near Term Program

Physics panel wants profile measurements requiring wide-angle diagnostics.

4. R&D Program Description

Determine analytically and experimentally the most promising composite shield.

R&D DATA SHEET

1. R&D Item

Radiation hardened line-of-sight sensors such as bolometers, UV and soft X-ray detectors (X-ray crystals), neutral particle analyzers, torus pressure gauges.

2. Description of Problem/Need

Normally, these sensors are exposed directly to plasma radiation because there is no way to provide an off-set penetration in a shield with mirrors or wave guides.

3. Justification for Near Term Program

Some diagnostics proposed for ignition tokamaks by the physics panel require direct line-of-sight penetration which will be subjected to fusion particle radiation during the ignition time.

4. R&D Program Description

Design and build line-of-sight sensors; then test them in existing nuclear facilities to determine whether the integrated neutron flux degradation is acceptable for pulsed ignition tokamaks.

R&D DATA SHEET

1. R&D Item

Special maintenance fixtures and tools

2. Description of Problem/Need

Some diagnostics will have to be removed for in-vessel inspection and limiter tile replacement. The diagnostic module must be disconnected and rolled back on rails.

3. Justification for Near Term Program

Limiter tiles are not lifetime components and must be replaced when damaged. Mirrors also may not be lifetime components and have to be replaced.

4. R&D Program Description

Determine requirements and work with remote handling equipment vendors to develop suitable remote-controlled fixtures and tools.

R&D DATA SHEET

1. R&D Item

Material Properties — Design Data Base — All Materials

2. Description of Problem/Need

In all stages of design, new and novel materials will be proposed for which there exists an inadequate design data base. It will be necessary to make critical properties measurements and incorporate these into the design data base.

3. Justification for Near Term Program

The CIT Program Conceptual Design must make use of new materials to be creative and cost effective, especially in the areas of first-wall materials and diagnostics. With such new materials, the design data base is often almost nonexistant. Critical properties measurements must be made in a timely manner to be responsive to design needs.

4. R&D Program Description

This program will consist of the measurement of critical materials properties, such as coefficient of thermal expansion, thermal conductivity, mechanical properties, interfacial conductances, etc., and the incorporation of the data into the design data base so that creative new materials and materials combinations can be utilized at all stages of design.

JLS:bb
ORNL
11/12/85

11/14/85

R&D DATA SHEET

1. **R&D Item** INSULATION - ELECTRICAL/THERMAL AND MECHANICAL PROPERTIES

2. **Description of Problem/Need**
IGNITOR PLATE-TURN TF COILS REQUIRE AN INSULATING MATERIAL THAT SERVES AS AN ELECTRICAL INSULATOR WHILE BEARING MECHANICAL COMPRESSIVE LOADS OVER A TEMPERATURE RANGE OF -190C TO 300C.

3. **Justification for Near Term Program**
SUCCESS OF THE IGNITOR DESIGN IS KEYED TO IDENTIFYING AN INSULATING MATERIAL THAT HAS MECHANICAL PROPERTIES SIMILAR TO THAT OF COPPER OVER THE TEMPERATURE RANGE OF -190C TO 300C. THIS REQUIREMENT RESULTS FROM VERY CLOSE FITTING OF VARIOUS COMPONENTS (TF, OH AND SUPPORT STRUCTURE) IN THE CENTER POST REGION.

4. **R&D Program Description**
   1. IDENTIFY CANDIDATE INSULATING MATERIALS (EPOXIES, CERAMICS, POLYIMIDES, ETC)
   2. DETERMINE MEANS OF APPLICATION, INSPECTION AND REPAIR
   3. DETERMINE ELECTRICAL/MECHANICAL PROPERTIES AS A FUNCTION OF TEMPERATURE, THERMAL/LOAD CYCLES AND IRRADIATION EXPOSURE.

*Compact Ignition Tokamak Program**

ISSUES TO BE RESOLVED BY JANUARY

C.A. Flanagan
For The FEDC Staff
Austin, Texas
November 18, 1985

By acceptance of this article, the publisher or recipient acknowledges the U.S. Government's right to retain a nonexclusive, royalty-free license in and to any copyright covering the article.

*Research sponsored by the Office of Fusion Energy, U.S. Department of Energy, under Contract No. DE-AC05-84OR21400 with Martin Marietta Energy Systems, Inc.

THE PATH TO JANUARY

- CONCEPT CONFIGURATION
- DESIGN SPACE CHARACTERIZATION
- FACILITY/DEVICE LAYOUTS
- AUXILIARY SYSTEM DEVELOPMENT
- COST
- R&D
- ALTERNATE SITE

CONCEPT CONFIGURATION

PRESS CONCEPT

- COMPLETE DESIGN/ANALYSIS
  - TORQUE STRUCTURE
  - REACTING STRUCTURE
- INTEGRATE PIECES
  - OH/TF/PF/VV/FW/OVERALL STRUCTURE
- SATISFY PLASMA REQUIREMENTS
- POINT DESIGN
- ITERATE FOR OPTIMUM DESIGN

CONCEPT CONFIGURATION

PRESS CONCEPT

- COMPLETE DESIGN/ANALYSIS
  - TORQUE STRUCTURE
  - REACTING STRUCTURE
- INTEGRATE PIECES
  - OH/TF/PF/VV/FW/OVERALL STRUCTURE
- SATISFY PLASMA REQUIREMENTS
- POINT DESIGN
- ITERATE FOR OPTIMUM DESIGN

DESIGN SPACE CHARACTERIZATION

- COMPLETE PARAMETRICS TO ILLUSTRATE SENSITIVITIES/IMPACT ON

  - PLASMA PARAMETERS
  - ENGINEERING PARAMETERS
  - COST

FACILITY/DEVICE LAYOUTS

- DEFINE SYSTEM REQUIREMENTS
- DETERMINE OPTIONS
- SELECT PREFERRED OPTION
- SCOPE REMOTE MAINTENANCE EQUIPMENT

AUXILIARY SYSTEM DEVELOPMENT

- DEFINE SYSTEMS
  - RF
  - FUELING
  - DIAGNOSTICS
  - VACUUM
  - TRITIUM
  - COOLING
  - ELECTRICAL
- DETERMINE PERFORMANCE/PARAMETERS

COST

- PREPARE ESTIMATES FOR CANDIDATE OPTIONS
  - IGNITOR/LITE/ISP

R&D

- COORDINATE PREPARATION OF R&D NEEDS

ALTERNATE SITE

- SUPPORT PREPARATION OF PLAN FOR ALTERNATE SITE ASSESSMENT

COMPACT IGNITION TOKAMAK SIZE/COST STUDY

CONCEPT COORDINATION WORKSHOP

C. A. FLANAGAN

W. R. HAMILTON

NOVEMBER 18, 1985

By acceptance of this article, the publisher or recipient acknowledges the U.S. Government's right to retain a nonexclusive, royalty-free license in and to any copyright covering the article.

*RESEARCH SPONSORED BY THE OFFICE OF FUSION ENERGY, U.S. DEPARTMENT OF ENERGY, UNDER CONTRACT NO. DE-AC05-84OR21400 WITH MARTIN MARIETTA ENERGY SYSTEMS, INC.

TOPICS OF DISCUSSION

- OBJECTIVE
- APPROACH
- ASSUMPTIONS/CONSTRAINTS
- METHODOLOGY
- RESULTS

OBJECTIVE

EXAMINE SENSITIVITY OF CIT DEVICE COST WITH RESPECT TO DEVICE SIZE (MAJOR RADIUS) ASSUMING SITING AT PPPL.

APPROACH

- ASSUME LIQUID NITROGEN COOLED LITE CONCEPT
- EXAMINE THREE LITE DEVICE SIZES
  Ro = 1.1 M Ro = 1.3 M Ro = 1.5 M
- USE FEDC SYSTEMS CODE/OPTIMIZER CODE TO FIND DEVICE PARAMETERS WHICH MAXIMIZE KAYE-GOLDSTON IGNITION MARGIN SUBJECT TO ENGINEERING AND PHYSICS CONSTRAINTS
- USE FEDC COST ESTIMATING METHODOLOGY (DATA BASE/SPREADSHEET) TO ASSESS COST OF THREE DEVICES.
- ASSUME PPPL SITE CREDITS

PHYSICS ASSUMPTIONS/CONTRAINTS

- IGNITION MARGIN DETERMINED ASSUMING

  KAYE-GOLDSTON SCALING FOR ELECTRON CONFINEMENT

  3 TIMES CHAING-HINTON FOR ION CONFINEMENT

- PLASMA BURN TIME OF 10 * τ_E
- MAXIMUM BETA BASED ON TROYON LIMIT
- MURAKAMI DENSITY LIMIT IMPOSED
- PF SYSTEM PROVIDES FOR

  MHD EQUILIBRIUM

  INDUCTIVE CURRENT START-UP AND BURN CAPABILITY

ENGINEERING ASSUMPTIONS/CONSTRAINTS

- LIQUID NITROGEN COOLED COPPER COILS
  - TF: INNER LEG - CU 175 OUTER LEG - CU 102
  - PF: OH - CU 155 EF - CU 102
- TEMPERATURE EFFECTS INCLUDED
- MAXIMUM CURRENT DENSITY IN COILS DETERMINED FROM STRESS LIMITS
- OH SWING TIME OF 3 S
- CURRENT RAMP STARTUP AND SHUTDOWN TIMES OF 3 S
- LITE ANTI-TORQUE STRUT FRAME CONCEPT

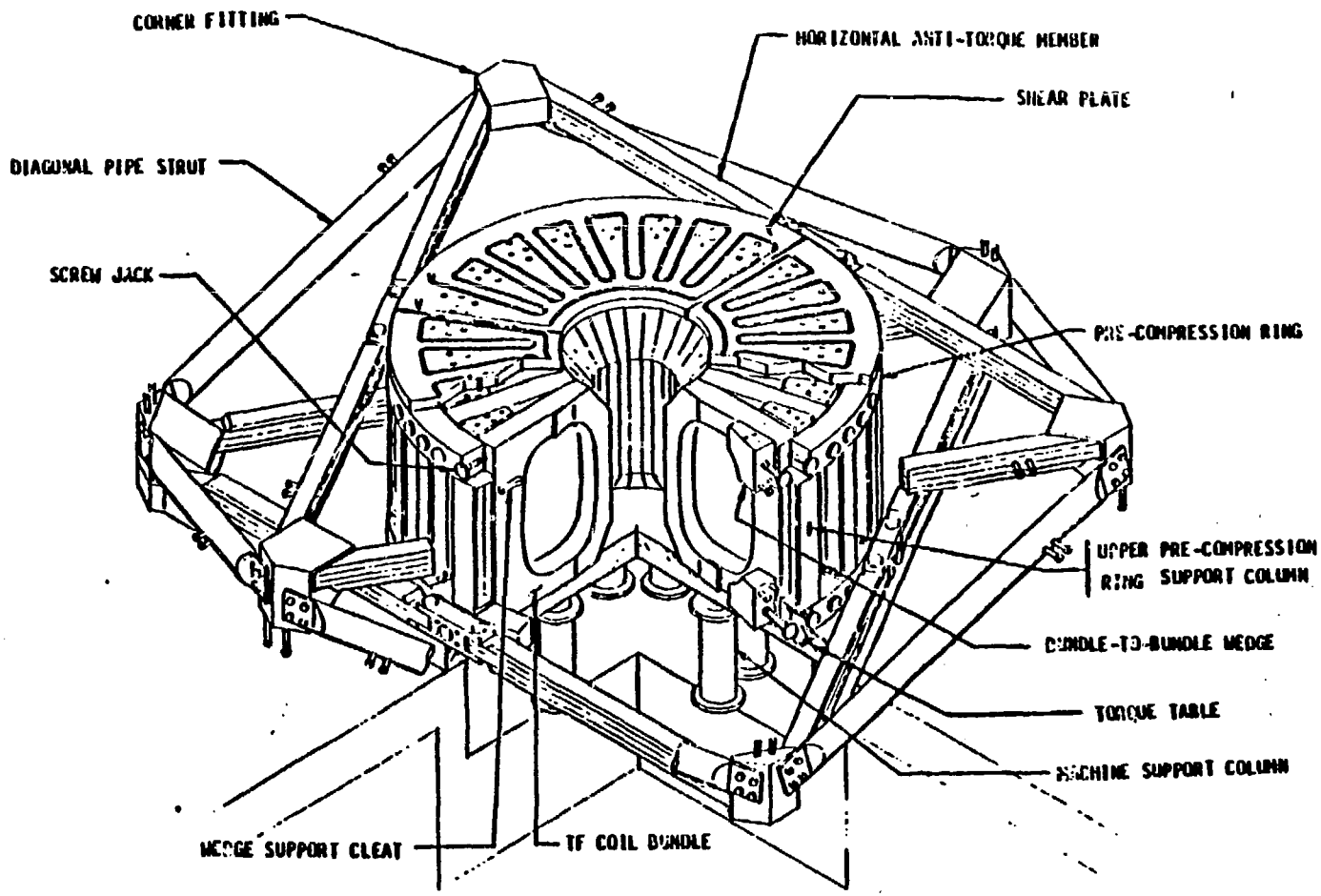
CORNER FITTING
HORIZONTAL ANTI-TORQUE MEMBER
SHEAR PLATE
DIAGONAL PIPE STRUT
SCREW JACK
PRE-COMPRESSION RING
UPPER PRE-COMPRESSION RING SUPPORT COLUMN
BUNDLE-TO-BUNDLE WEDGE
TORQUE TABLE
MACHINE SUPPORT COLUMN
WEDGE SUPPORT CLEAT
TF COIL BUNDLE

METHODOLOGY

- FACILITIES: DESIGN ALGORITHMS USED FOR DEVICE SIZE DEPENDENT FACILITIES - TEST CELL, HOT CELL, WARM CELL, MOCKUP FACILITY, CRYOGENICS FACILITY, ELECTRICAL EQUIPMENT FACILITIES. OTHER FACILITY SIZES CONSTANT.

- STR/VV/FW/LIM: SYSTEMS CODE MACHINE DIMENSION OUTPUT COUPLED WITH DESIGN ALGORITHMS DEVELOPED FROM EARLIER LITE DESIGNS.

- MAGNETS: WEIGHTS DETERMINED FROM SYSTEMS CODE OUTPUT

- VACUUM SYSTEM: SYSTEM SIZED FOR INITIAL PUMPDOWN AND PUMPING BETWEEN SHOTS

- POWER CONDITIONING: "STRAWMAN" DESIGNS DEVELOPED FROM MAGNET ELECTRICAL REQUIREMENTS TO BE COMPATIBLE WITH PPPL SITE

METHODOLOGY - CONT.

- WATER COOLING — MONITORED SYSTEM SIZED FOR VV/FW/LIM AND RF REQUIREMENTS. NONMONITORED SYSTEM USES EXISTING TFTR SYSTEMS.
- LIQUID NITROGEN — REQUIREMENTS DICTATED BY PF AND TF COIL ENERGY
- ELECTRICAL SYSTEM: "STRAWMAN" DESIGNS DEVELOPED FROM DEVICE/FACILITY ELECTRICAL REQUIREMENTS TO BE COMPATIBLE WITH PPPL SITE
- SYSTEMS COMMON TO ALL DEVICES
  - FUEL HANDLING
  - INSTRUMENTATION/CONTROL
  - REMOTE MAINTENANCE

CIT SIZE/COST STUDY

PACE-"NEW FUNDS"

(FY 1984M$)

	R_0 = 1.1M	R_0 = 1.3M	R_0 = 1.5M
FACILITIES	26.8	29.1	34.3
STR/VV/FW/LIM	18.4	26.9	34.8
MAGNETS	17.3	28.0	43.2
RF	49.0	55.6	65.5
VACUUM SYSTEM	6.5	6.9	7.6
POWER CONDITIONING	20.0	22.1	48.7
HEAT TRANSPORT	2.5	2.7	3.0
FUEL HANDLING	8.9	8.9	8.9
I&C	13.2	13.2	13.2
REMOTE MAINTENANCE	23.8	23.8	23.8
ELECTRICAL SYSTEM	0.7	0.7	0.9
HEAT REDUCTION	0.2	0.2	0.2
TOTAL DIRECT COST	187.3	218.1	284.1
TOTAL INDIRECT COST	25.2	29.4	38.4
TOTAL PACE COST	212.5	247.5	322.5

CIT SIZE-COST STUDY

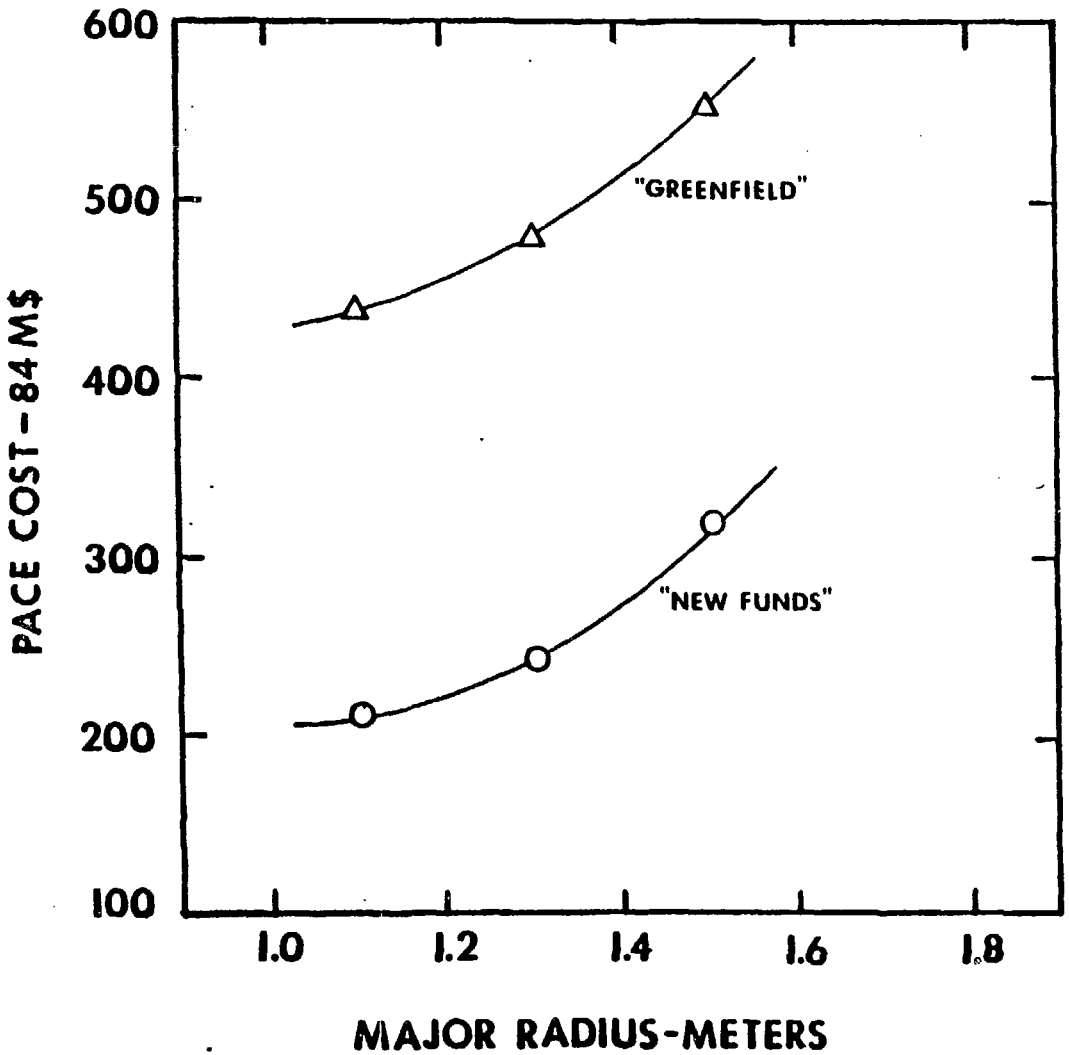

CIT SIZE-COST STUDY

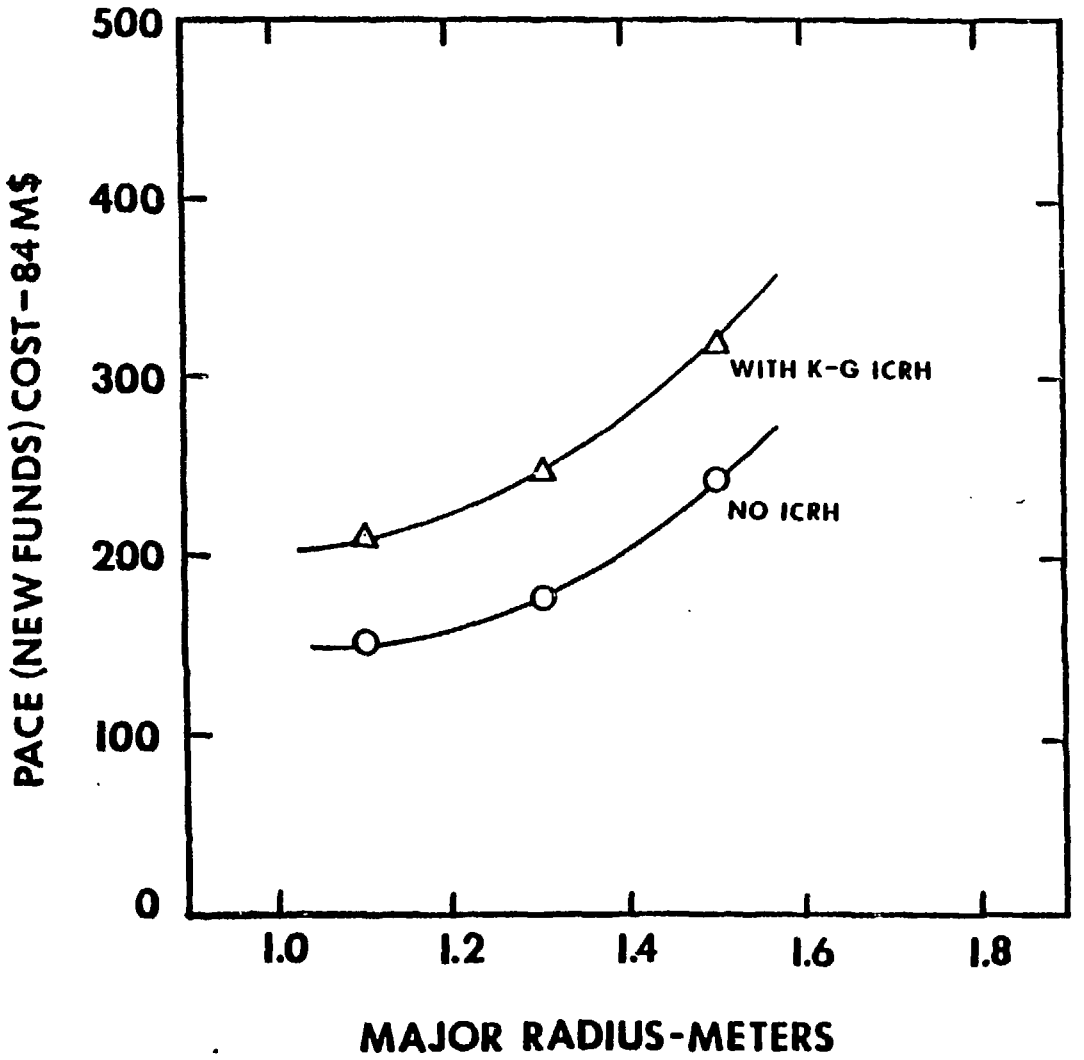

CIT SIZE-COST STUDY

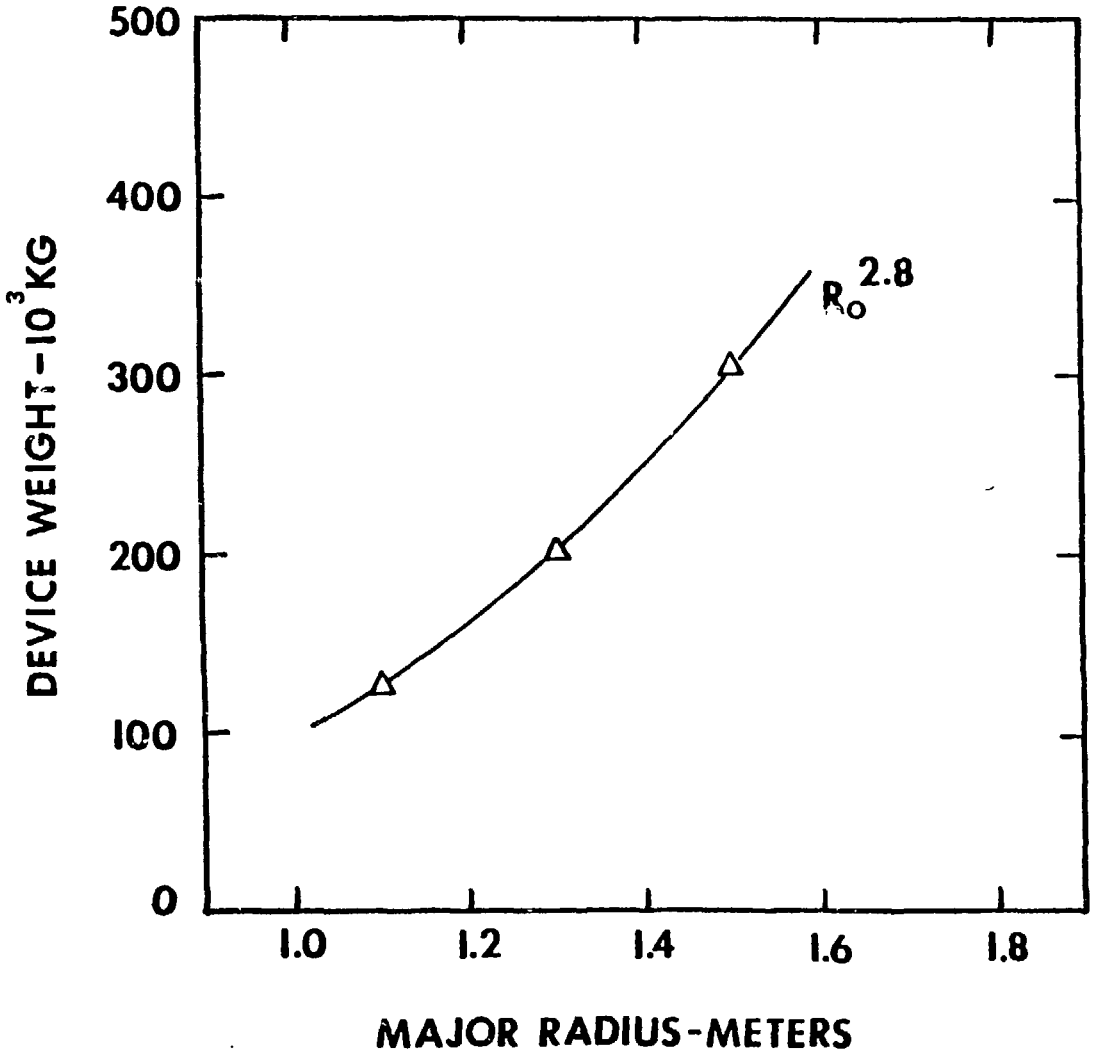

RF System Design

Compact Ignition Tokamak

C. Flanagan / J. Yugo

November 18, 1985

Austin, TX

By acceptance of this article, the publisher or recipient acknowledges the U.S. Government's right to retain a nonexclusive, royalty-free license in and to any copyright covering the article.

*RESEARCH SPONSORED BY THE OFFICE OF FUSION ENERGY, U.S. DEPARTMENT OF ENERGY, UNDER CONTRACT NO. DE-AC05-84OR21400 WITH MARTIN MARIETTA ENERGY SYSTEMS, INC.

Frequency Choice

FMIT Transmitter Modifications
- Currently Designed for 40 - 80 MHz
- 1.5 MW Output Power / Unit

Redesign above 80 MHz
- New Cavity Design for FPA
- New RF Designs for Driver Stages
- High Power Tetrode in Development
- Minimal Cost Impact

Redesign above 130 MHz
- New RF Designs for FPA / Drivers
- New High Power Tetrode Needed
- Cost Impact is in Tube Development

New Tetrode Design (above 130 MHz)
- Prototype Designed (10 ms pulse)
- Testing of Prototype Soon
- Development Needed for CW
- 1 - 2 Years until Production
- Cost Impact Unknown

Plasma Coupling Analysis

Pat Colestock / Don Blackfield

Modeling Approach:
- Two Dimensional (r,z)
- Hot Plasma
- ad hoc Bernstein Wave Model

Calculates:
- Wave Fields
- Power Deposition Profile
- Antenna Loading Impedance

Current Modifications
- Antenna Current Profiles
- Azimuthal Modes
- Recessed Antenna Model

Launcher Design

ORNL Double Resonant Loop Launcher

- Electrical Design:
- Design for CIT Parameters
- (Frequency, Power, Loading)
- Mechanical Design:
- Remote Maintenance
- Design for CIT Environment
- (Heat Flux, Neutron Flux)

ORNL "Folded" Waveguide

- Simpler Design than Loop Couplers
- Low Frequency Operation (200 MHz)
- No Dielectric Material Needed
- Lower Voltages than in Loops
- (Better Impedance Match to Plasma)
- Phased Arrays Perhaps Possible
- Initial Design Beginning

ORNL Resonant Double Loop Antenna

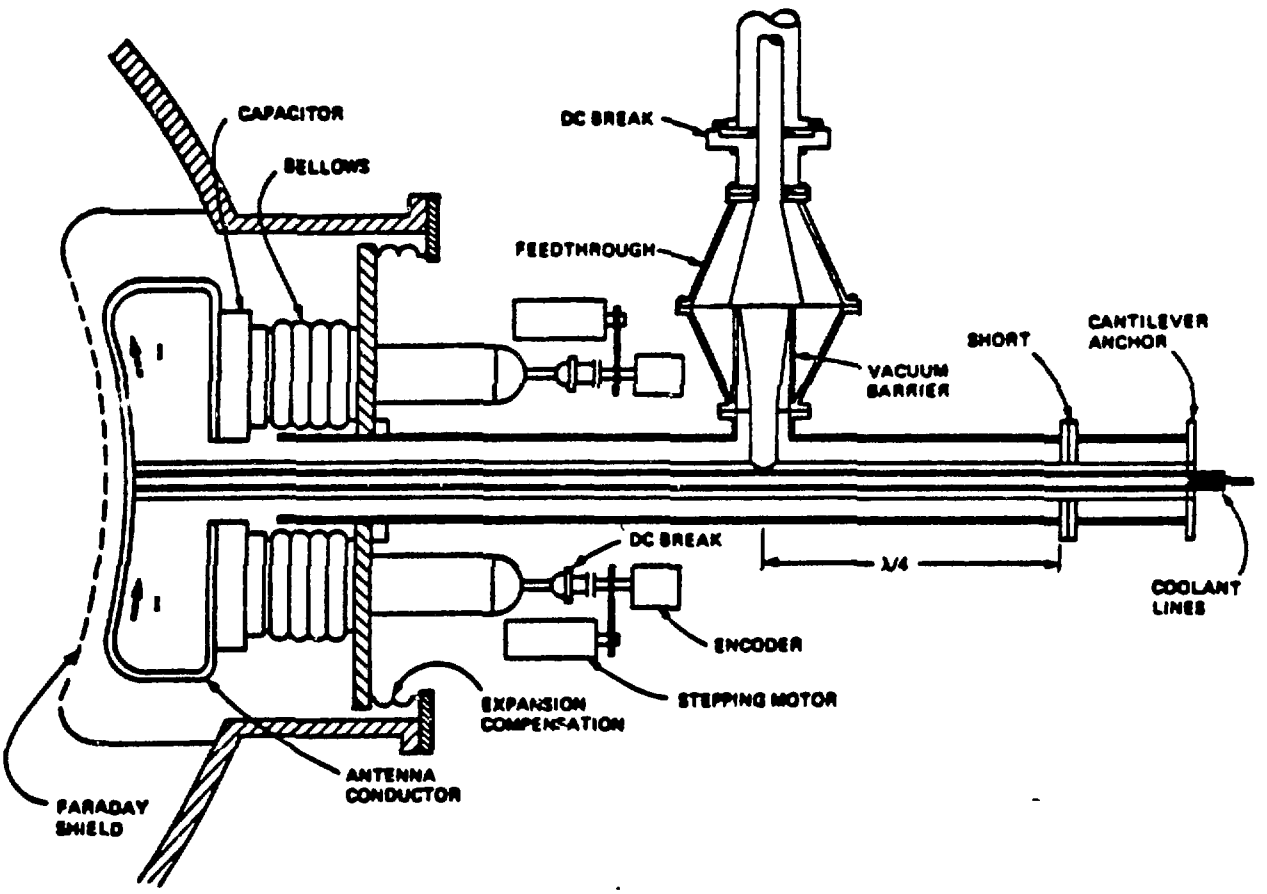

ORNL "Folded" Waveguide

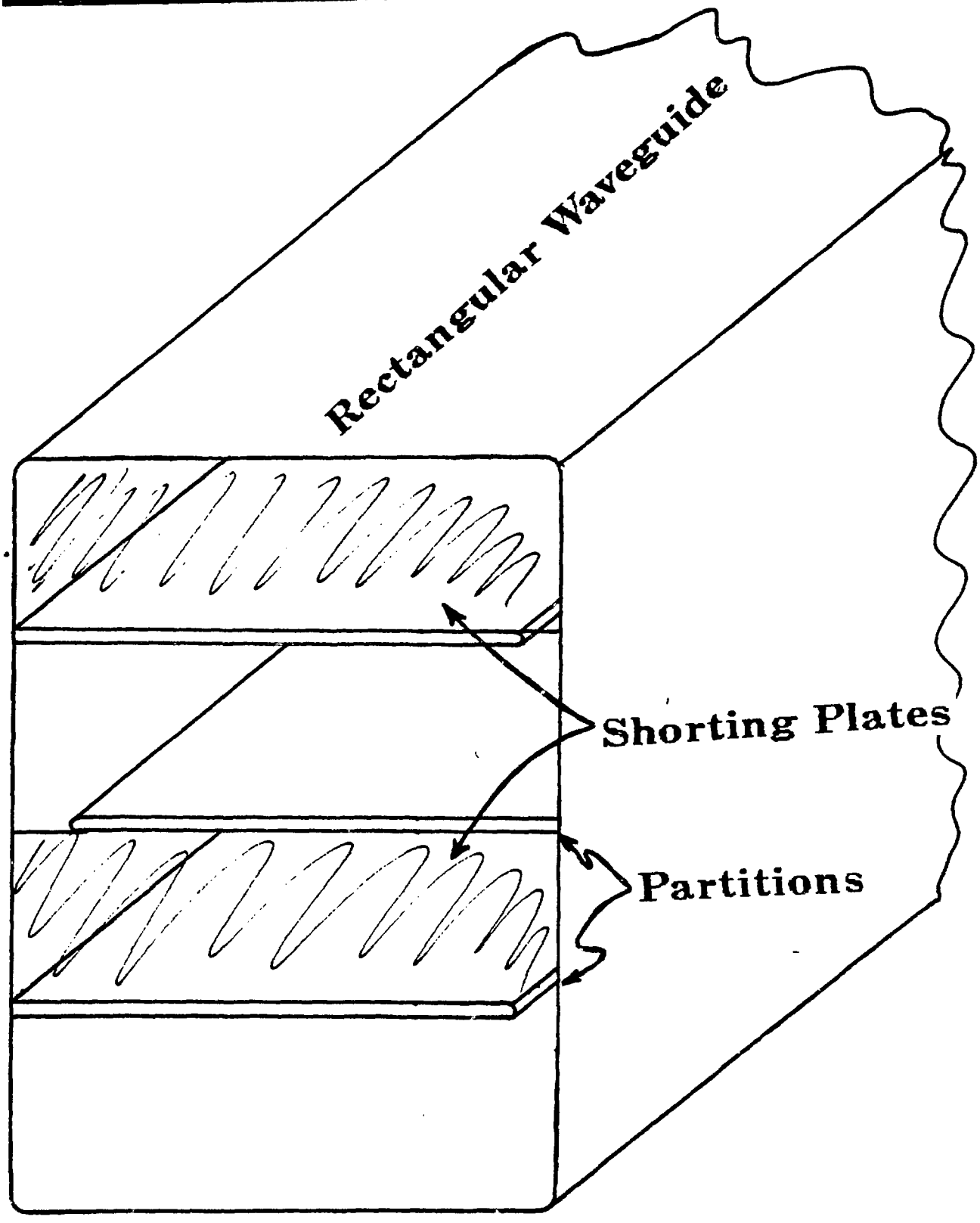

Recessed Antennas

Vacuum Field Calculation
- Two Dimensional Geometry (r,z)
- Low Frequency Approximation
- (Dimensions $\ll$ Wavelength)
- Vary Antenna Width and Recess
- Calculate Coupled Flux

Small Recess Depth to Width Ratio
- Least Penalty for Antenna Recess

Largest Antenna/Recess Width Ratio
- Least Penalty for Antenna Recess

Shallowest Recess is Best

Widest Recess is Best

Widest Antenna is Best

Preliminary Results Only

Additional Analysis Required to Quantify

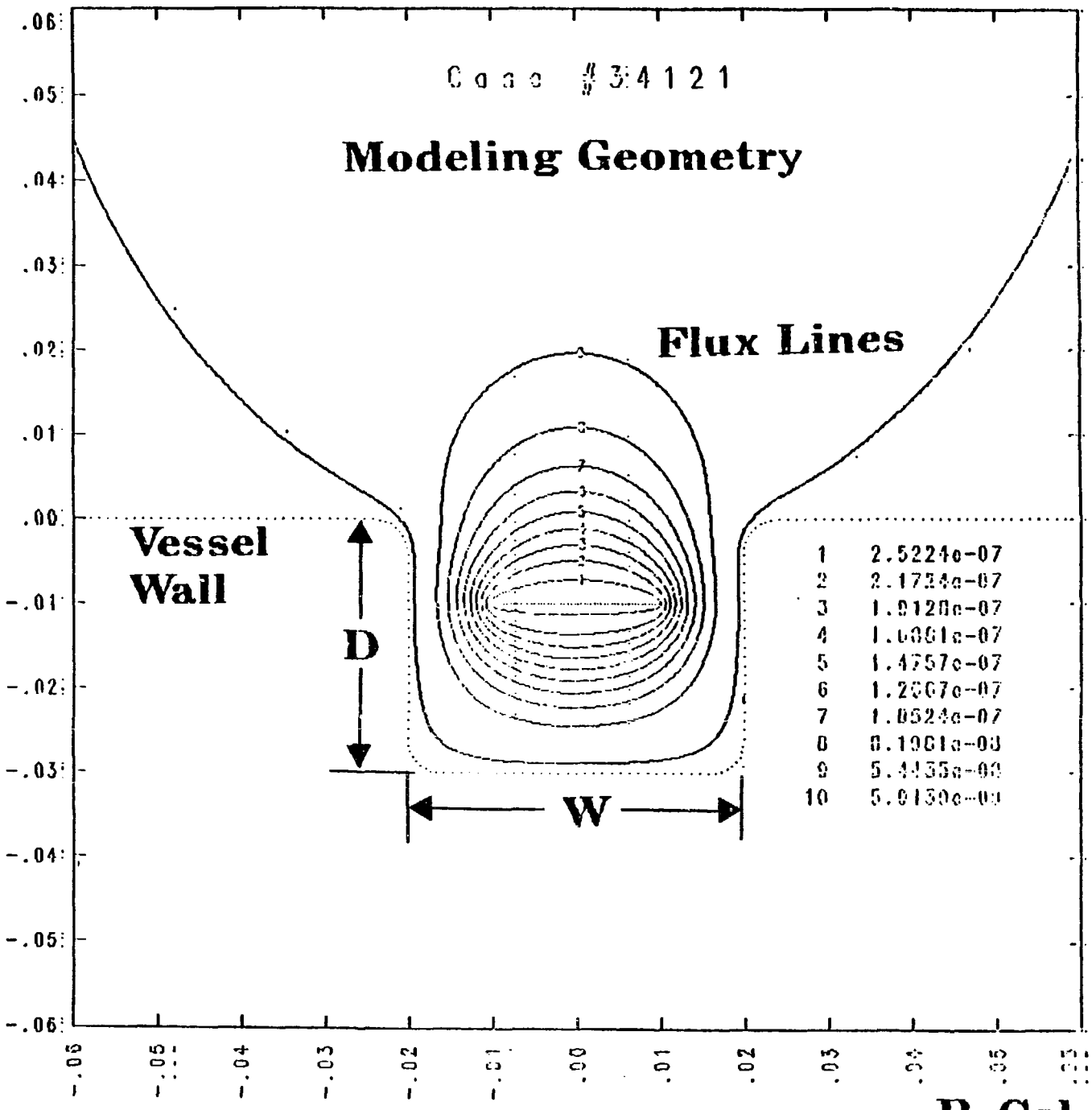
Case #34121
Modeling Geometry
Flux Lines
Vessel Wall
D
W
1 2.5224e-07
2 2.1724e-07
3 1.9128e-07
4 1.6861e-07
5 1.4757e-07
6 1.2667e-07
7 1.0524e-07
8 8.1961e-08
9 5.4435e-08
10 5.9130e-08
.06
.05
.04
.03
.02
.01
.00
-.01
-.02
-.03
-.04
-.05
-.06
-.06
-.05
-.04
-.03
-.02
-.01
.00
.01
.02
.03
.04
.05
.06

P. Colestock

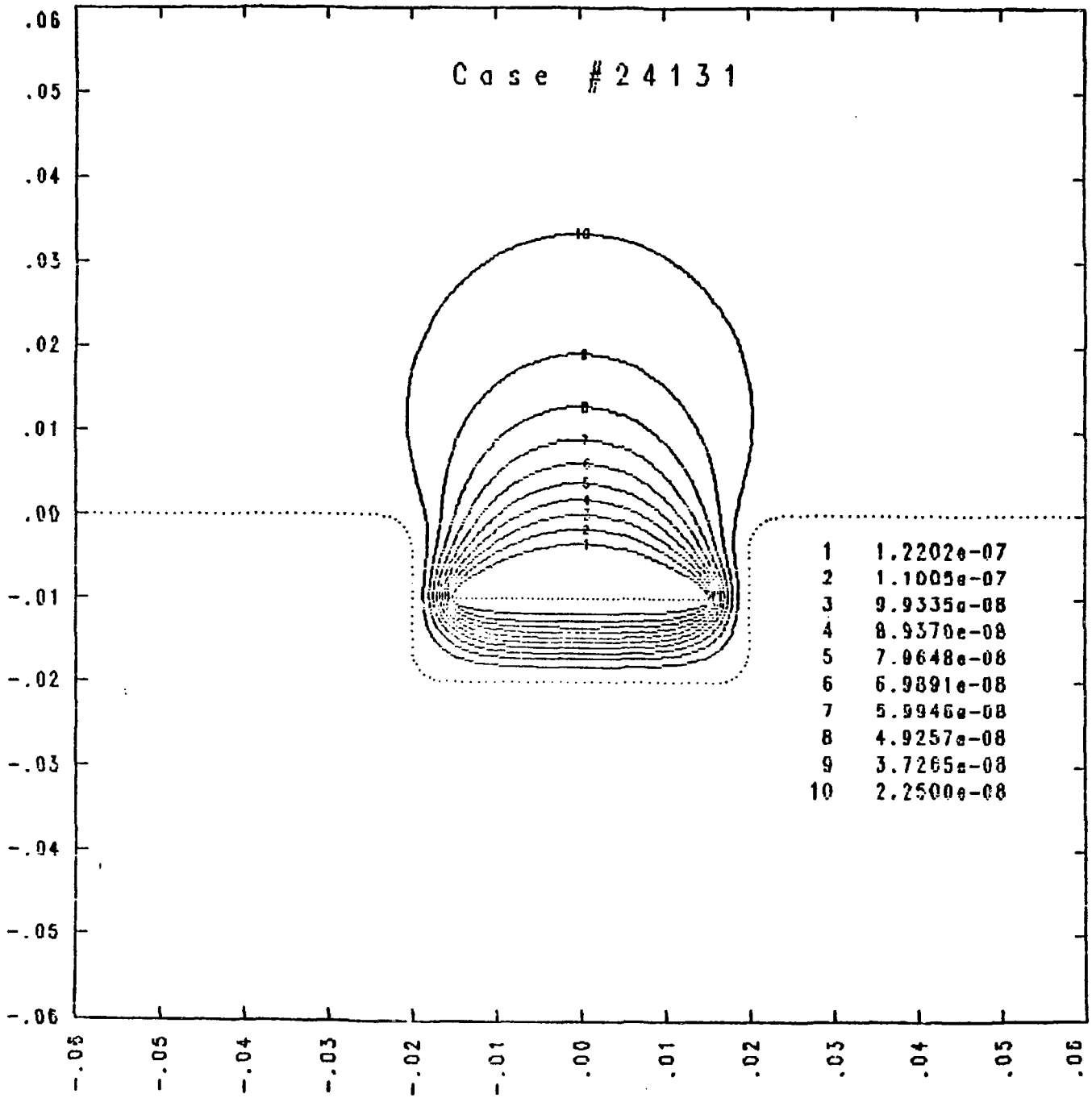
Case #24131
.06
.05
.04
.03
.02
.01
.00
-.01
-.02
-.03
-.04
-.05
-.06
-.06
-.05
-.04
-.03
-.02
-.01
.00
.01
.02
.03
.04
.05
.06
1 1.2202e-07
2 1.1005e-07
3 9.9335e-08
4 8.9370e-08
5 7.9648e-08
6 6.9891e-08
7 5.9946e-08
8 4.9257e-08
9 3.7265e-08
10 2.2500e-08

P. Colestock

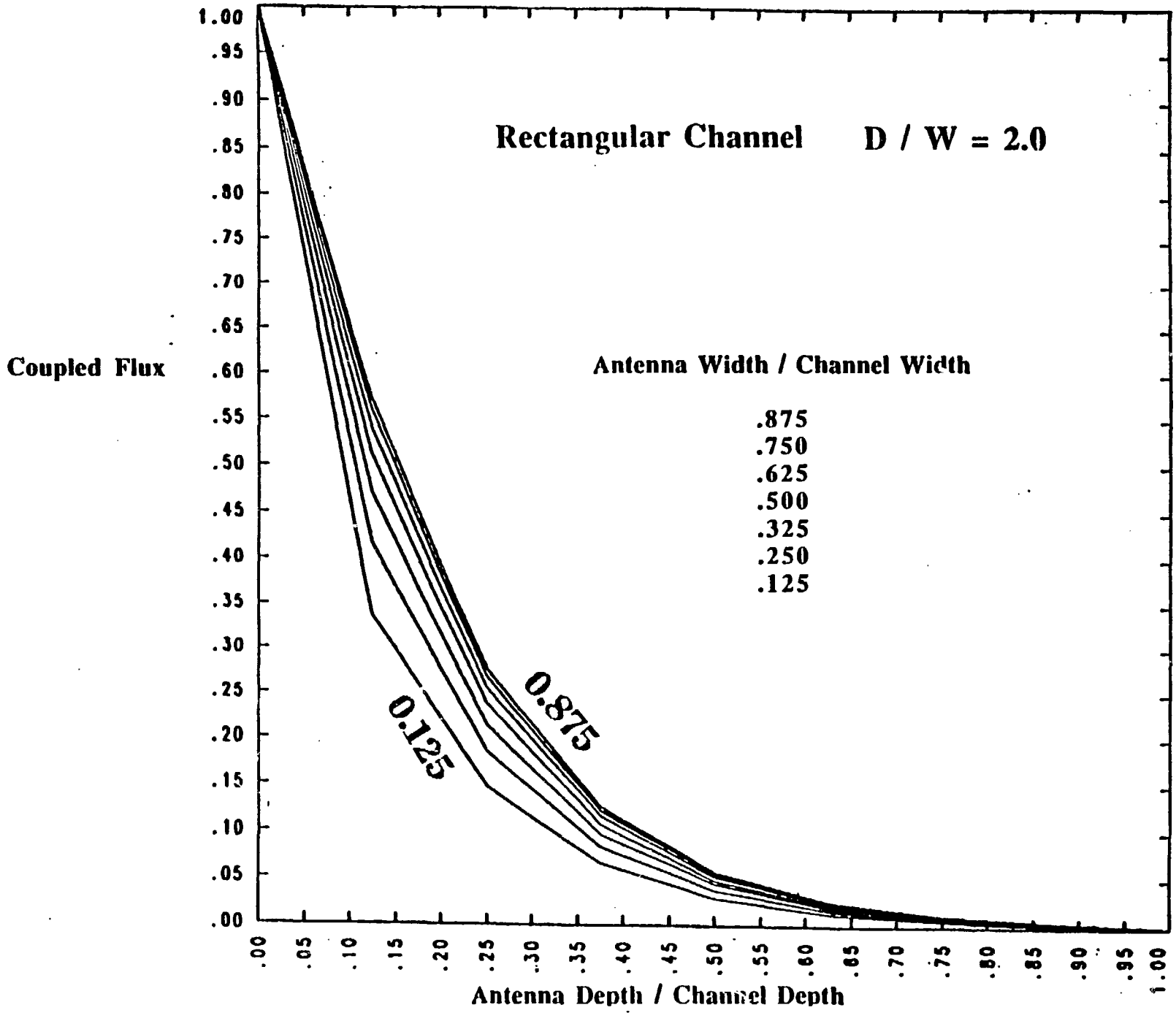
Rectangular Channel D / W = 2.0
Coupled Flux
Antenna Width / Channel Width
.875
.750
.625
.500
.325
.250
.125
0.875
0.125
1.00
.95
.90
.85
.80
.75
.70
.65
.60
.55
.50
.45
.40
.35
.30
.25
.20
.15
.10
.05
.00
.00
.05
.10
.15
.20
.25
.30
.35
.40
.45
.50
.55
.60
.65
.70
.75
.80
.85
.90
.95
1.00
Antenna Depth / Channel Depth

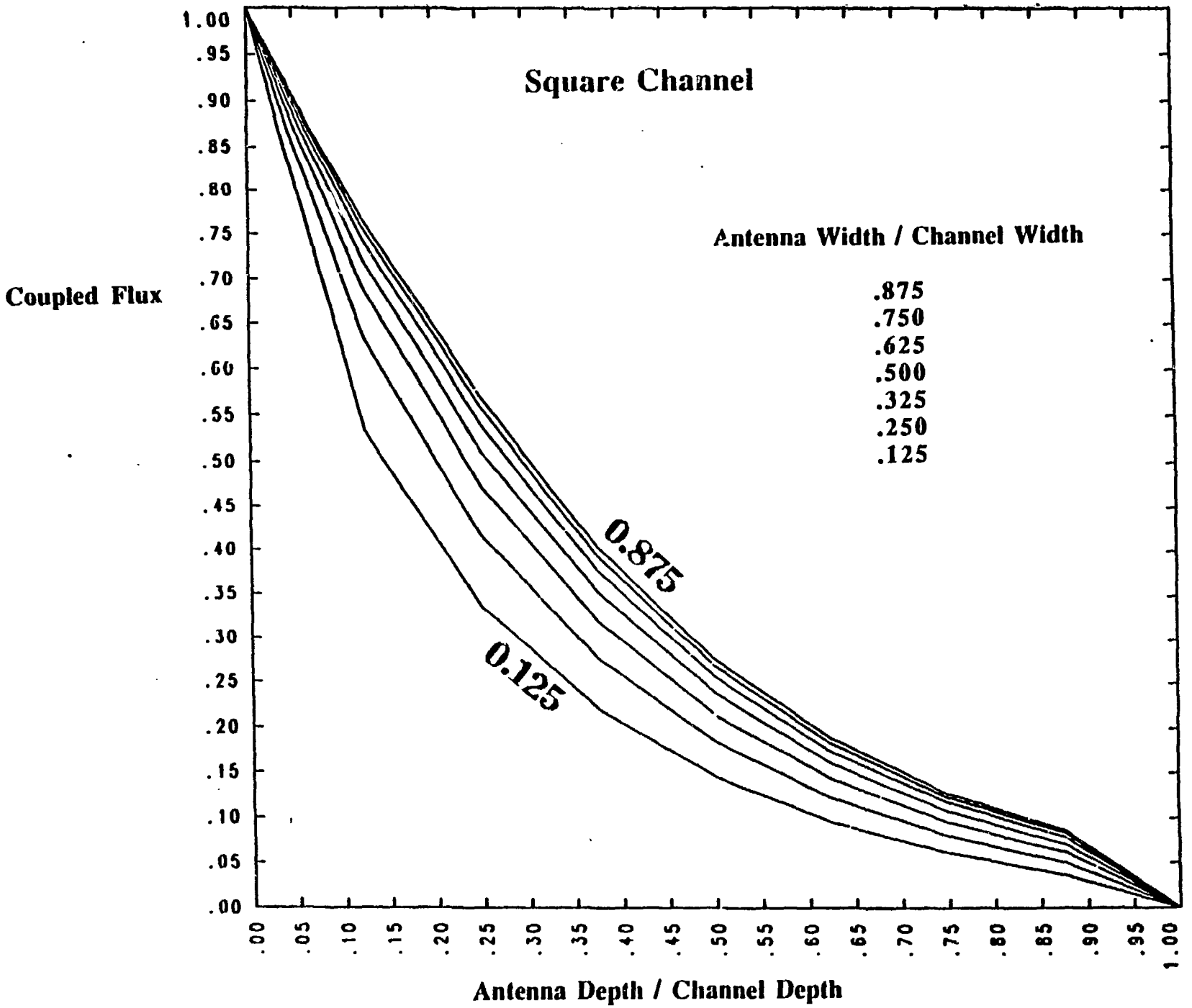
Square Channel
Coupled Flux
Antenna Width / Channel Width
.875
.750
.625
.500
.325
.250
.125
0.875
0.125
1.00
.95
.90
.85
.80
.75
.70
.65
.60
.55
.50
.45
.40
.35
.30
.25
.20
.15
.10
.05
.00
.00
.05
.10
.15
.20
.25
.30
.35
.40
.45
.50
.55
.60
.65
.70
.75
.80
.85
.90
.95
1.00
Antenna Depth / Channel Depth

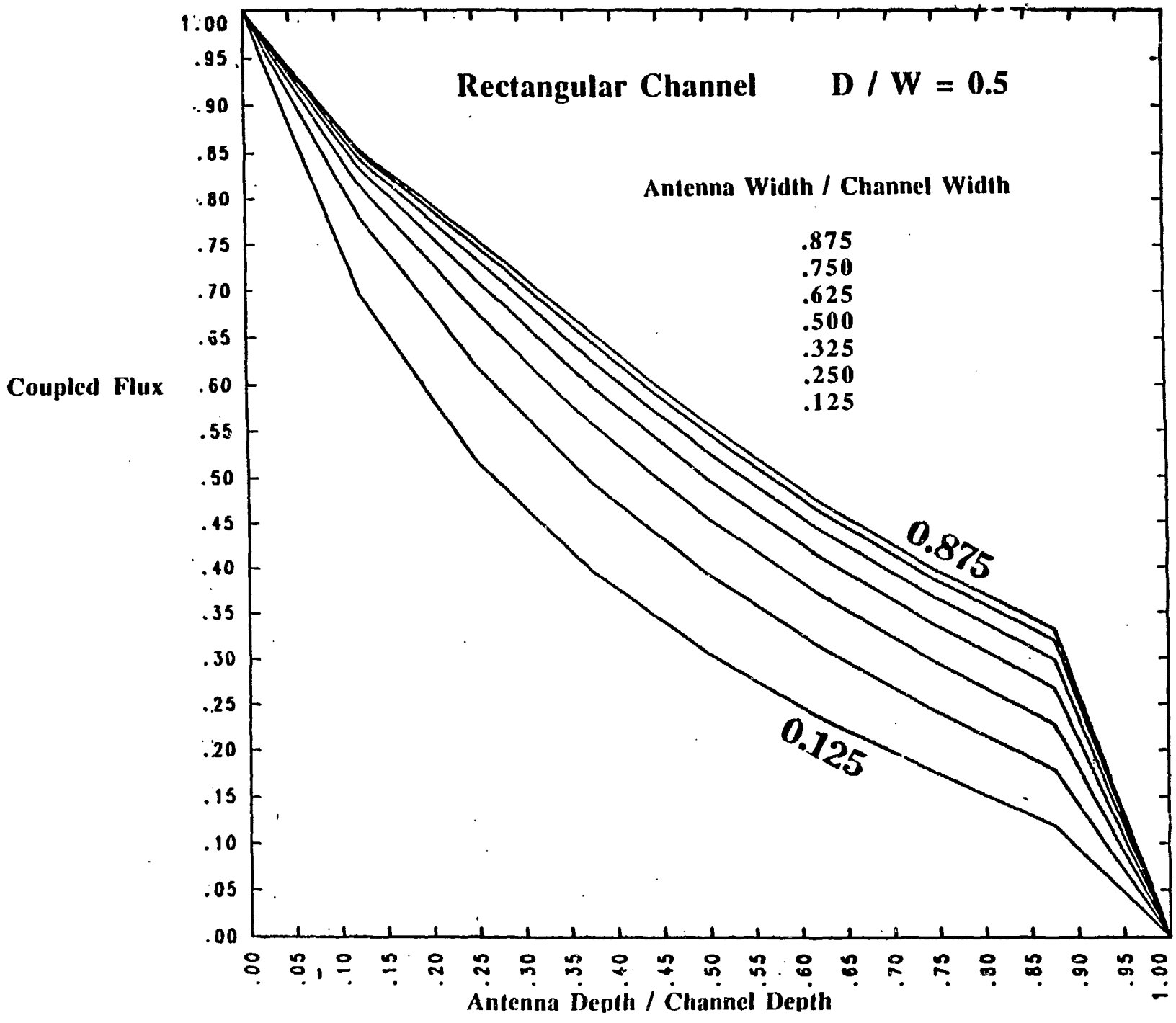
Rectangular Channel D / W = 0.5
Antenna Width / Channel Width
.875
.750
.625
.500
.325
.250
.125
0.875
0.125
Coupled Flux
1.00
.95
.90
.85
.80
.75
.70
.65
.60
.55
.50
.45
.40
.35
.30
.25
.20
.15
.10
.05
.00
.00
.05
.10
.15
.20
.25
.30
.35
.40
.45
.50
.55
.60
.65
.70
.75
.80
.85
.90
.95
1.00
Antenna Depth / Channel Depth

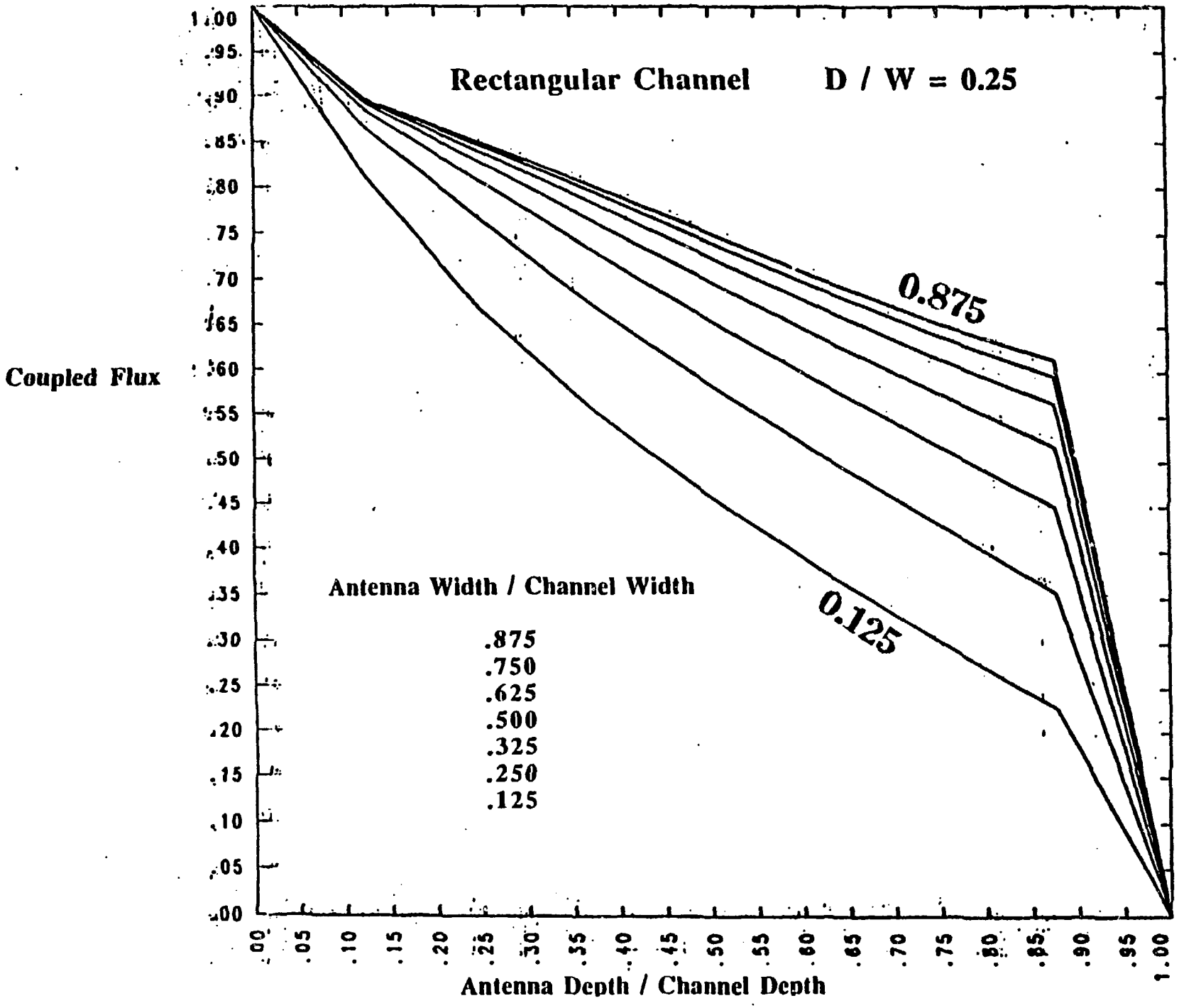
Rectangular Channel
D / W = 0.25
Coupled Flux
Antenna Depth / Channel Depth
Antenna Width / Channel Width
.875
.750
.625
.500
.325
.250
.125
0.875
0.125

ICRH Launcher R & D

Improve Operating Limits and Reliability

High Voltage / High Power Operation
- Arcing
- Multipactoring

Three Dimensional Modeling
- Couple with Plasma Codes

Prototype Fabrication / Testing
- Vacuum and Plasma Environment
- Push Voltage / Power Limits
- Understand Limiting Phenomena
- Develop/Test Coatings (reduce multipactor)

Faraday Shield R & D

Three Dimensional Modeling
- Antenna Design Codes
- Plasma Coupling Codes

Materials / Coatings
- Low Impurity Influx
- High Strength
- Low RF Losses
- High Coupled Flux

Development / Testing
- Measure Coupled Flux / Spectrum
- Test Survivability
- Develop Fabrication Techniques

FUSION ENGINEERING DESIGN CENTER

COMPACT IGNITION TOKAMAK PROGRAM*

STATUS OF FEDC STUDIES

C. A. FLANAGAN
FOR THE FEDC STAFF
AUSTIN, TEXAS
NOVEMBER 18, 1985

*RESEARCH SPONSORED BY THE OFFICE OF FUSION ENERGY, U.S. DEPARTMENT OF ENERGY, UNDER CONTRACT NO. DE-AC05-84OR21400 WITH MARTIN MARIETTA ENERGY SYSTEMS, INC.

By acceptance of this article, the publisher or recipient acknowledges the U.S. Government's right to retain a nonexclusive, royalty free license in and to any copyright covering the article.

OVERVIEW

TECHNICAL AREAS TO BE DISCUSSED

- MECHANICAL CONFIGURATION STATUS
- MAGNET ANALYSIS – TEMPERATURE DISTRIBUTION
- STRESS ANALYSIS
- COOLING BETWEEN BURNS
- TF COIL JOINT
- FACILITY/DEVICE LAYOUT OPTIONS
- PARAMETRIC ANALYSIS – PENG (LATER)
- RF SYSTEMS – YUGO/FLANAGAN (LATER)
- COST VS SIZE – FLANAGAN (LATER)

SOME EVENTS SINCE OCTOBER

- TECHNICAL REVIEW SCHEDULED WITH EUROPEAN DESIGN TEAM
  - DECEMBER 5,6
- REVIEW WITH FTU TEAM
  - DECEMBER 3
- U.S. TRAVELERS
  - BROWN, FLANAGAN, LEE - FEDC
  - COPPI - MIT
  - CITROLO - PPPL
  - JAMES - OFE

- DESIGN GUIDELINES ISSUED

MECHANICAL CONFIGURATION
(PRESS CONCEPT)

- WORKABLE SCHEME DEVELOPED FOR MAGNET SYSTEM
  - CENTER POST, OH, TF, EF COIL ARRANGEMENT
  - TRACTABLE FIT-UP OF MULTIPLE SURFACES

- FOCUS NOW ON
  - WORKING PRESS SCHEME (HYDRAULIC/MAGNETIC)
  - EXTERNAL TORQUE STRUCTURE

MAGNET SYSTEM

- OH:
  - HEIGHT, cm 188
  - THICKNESS, cm 20
  - MATERIAL "CDA155"

- EF:
  - ALL EXTERNAL
  - MATERIAL "CDA155/CDA102"

- TF:
  - BORE (H-W), cm 165 x 101
  - MATERIAL "CDA155/CDA102"
  - RADIAL THICKNESS, cm
    - INBOARD LEG 20
    - OUTBOARD LEG 25

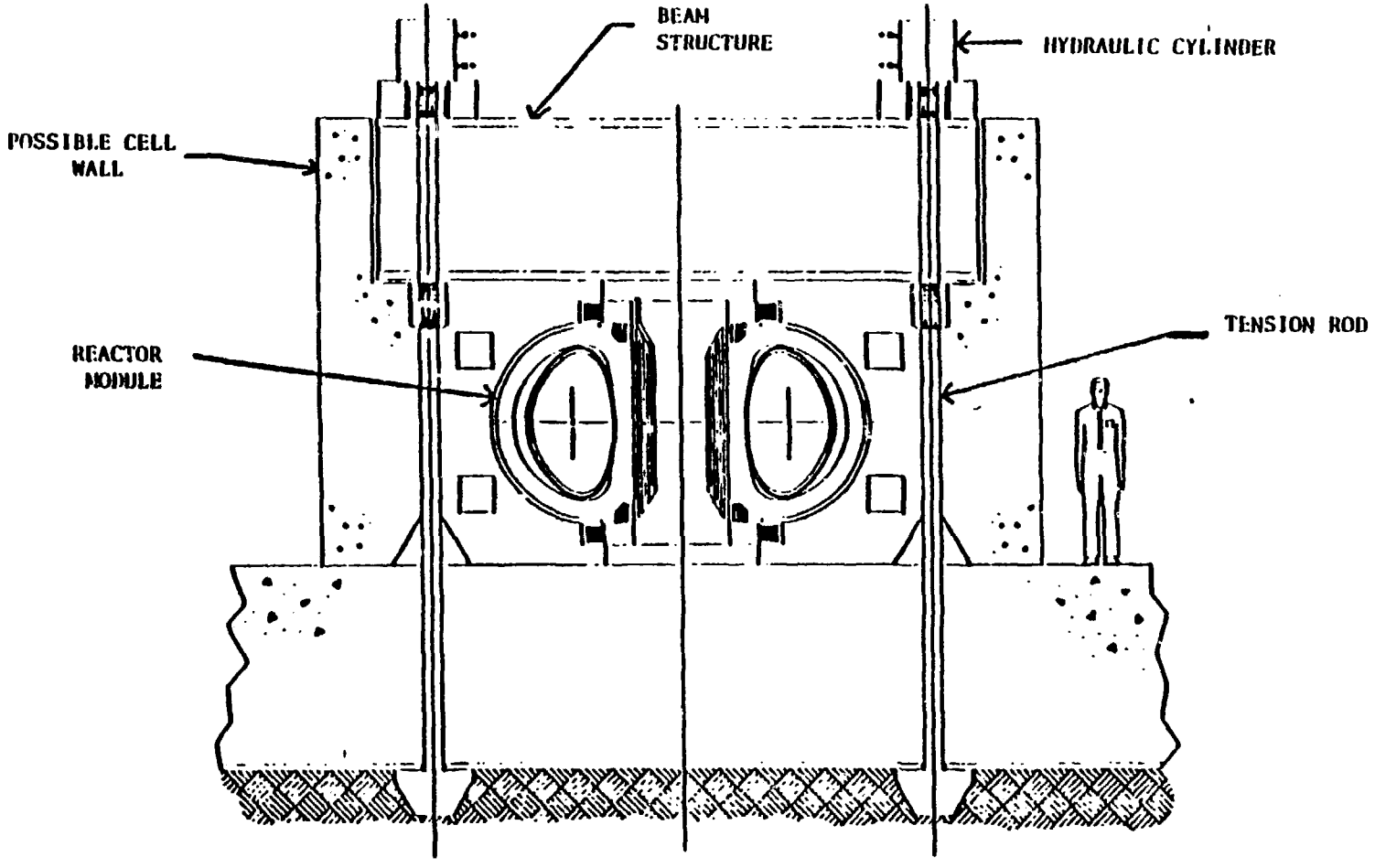

External press concept.

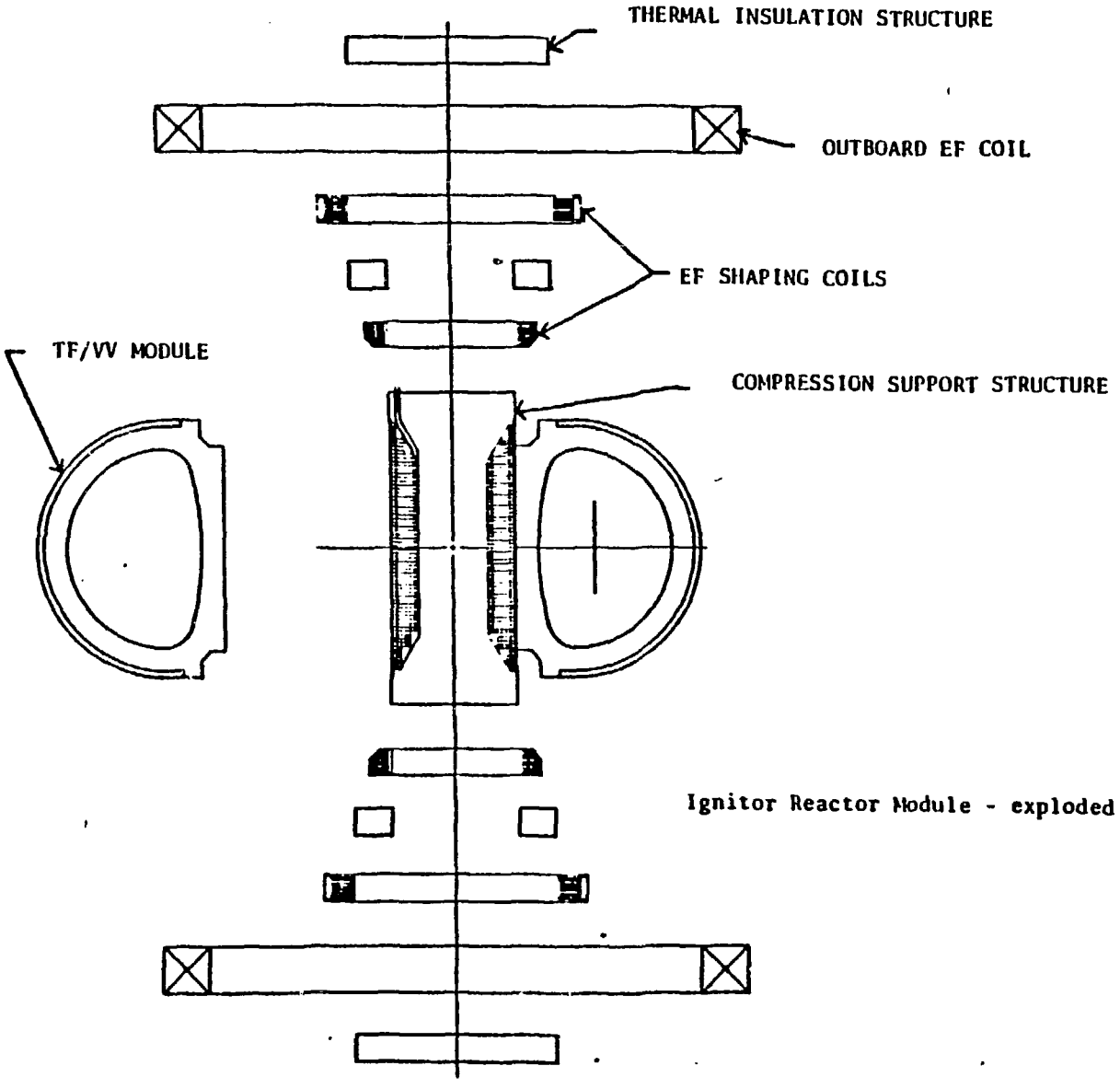

Ignitor Reactor Module - exploded view.

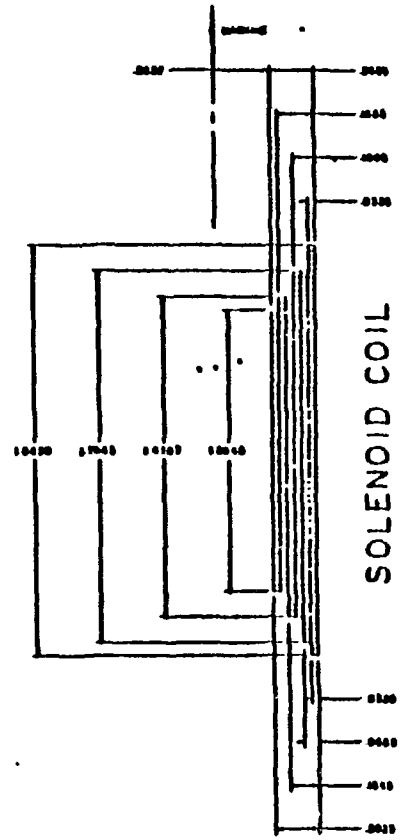

1.08 m Ignitor solenoid.

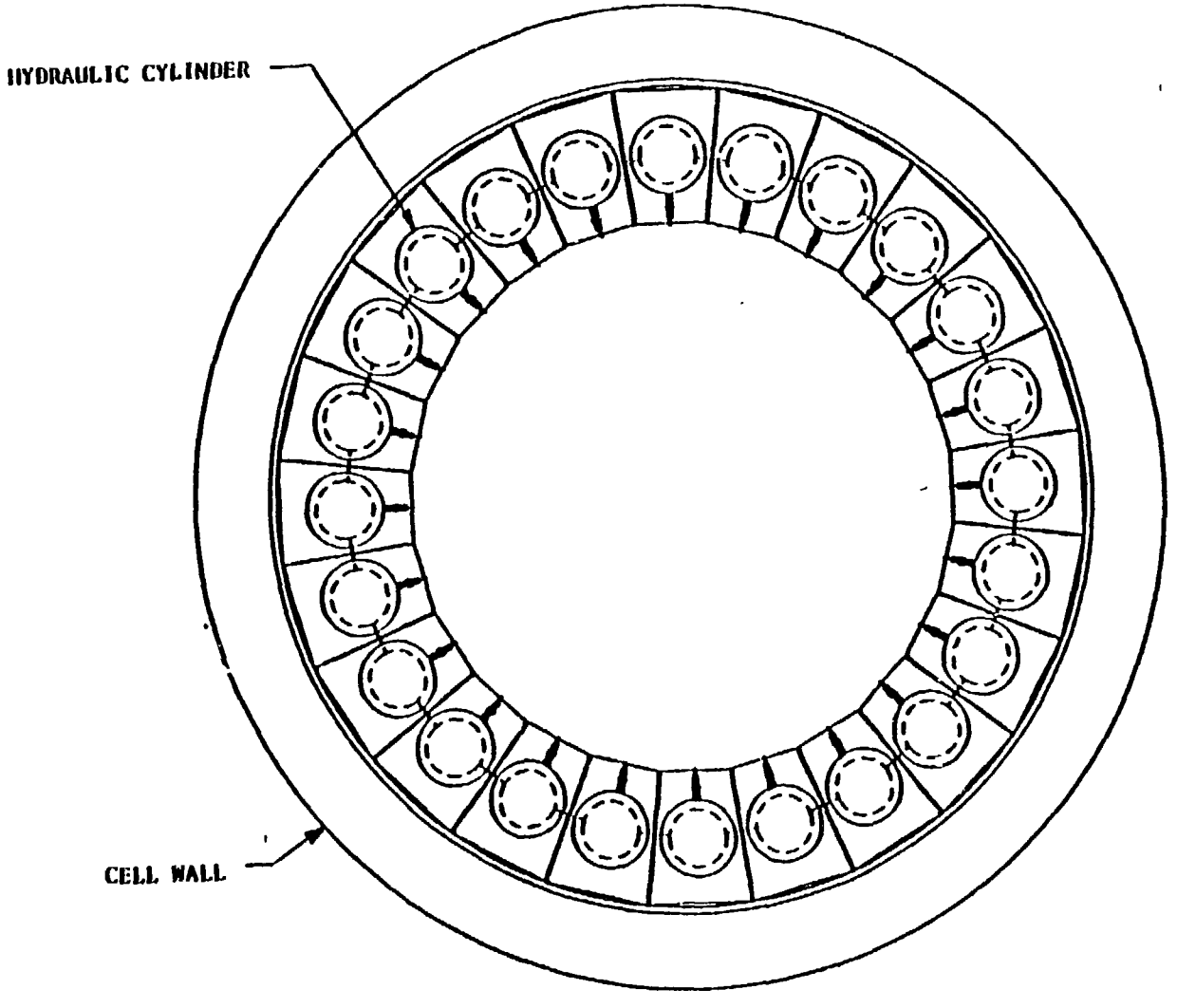

Plan view (Top of machine).

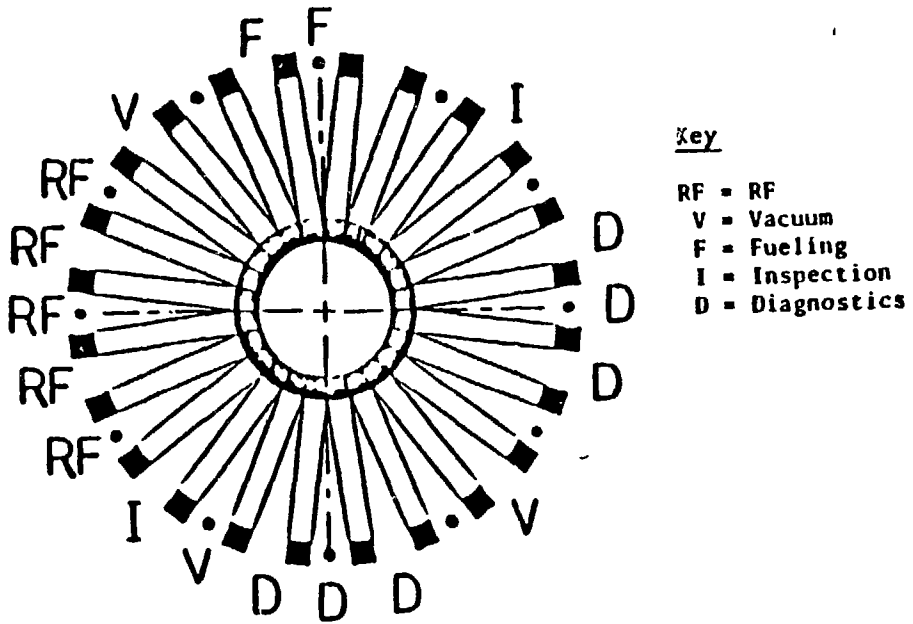

Allocation of port use in Ignitor.

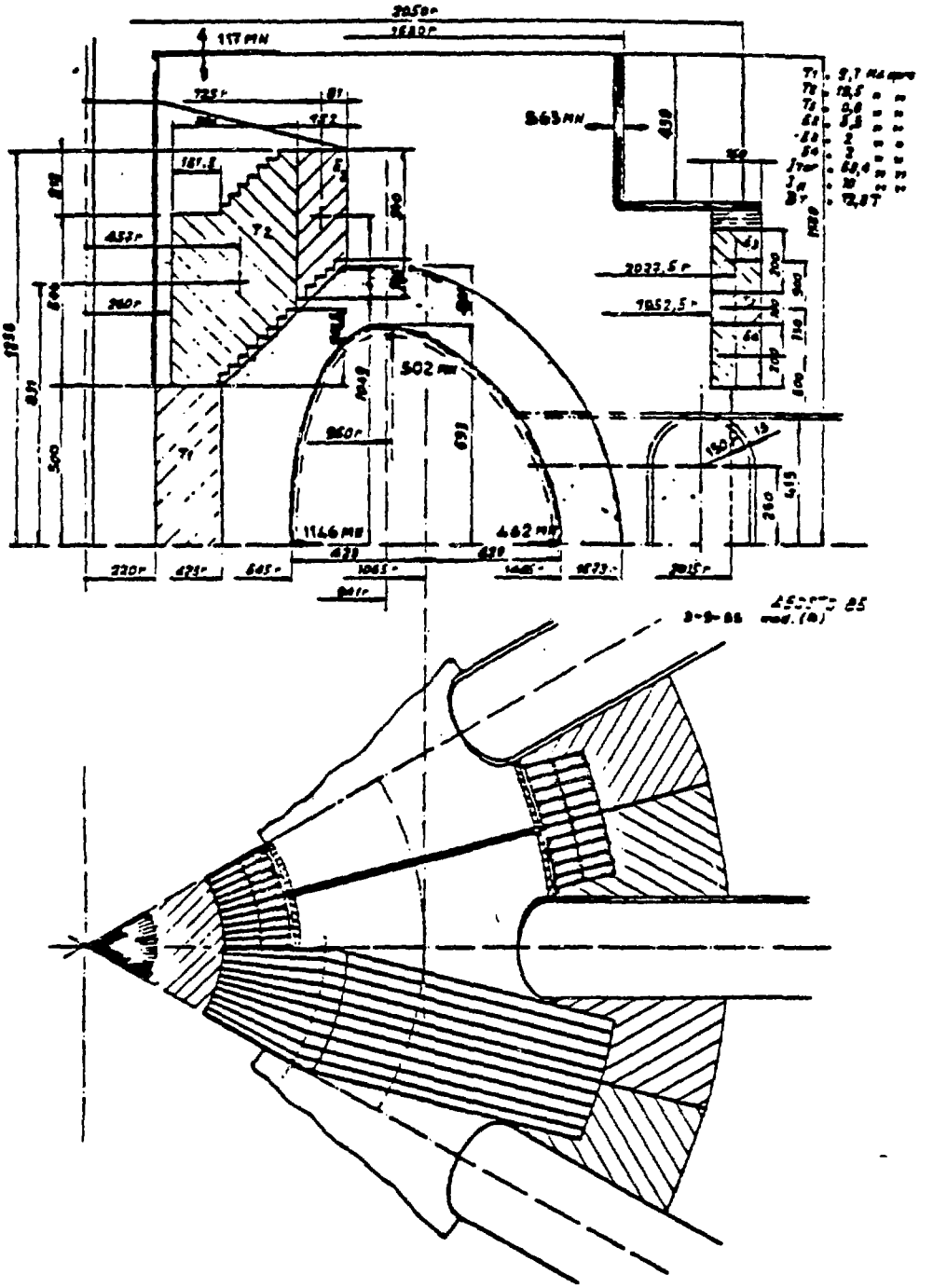

IGNITOR-L (REF. DESIGN)

IGNITOR TF SYSTEM CONFIGURATION

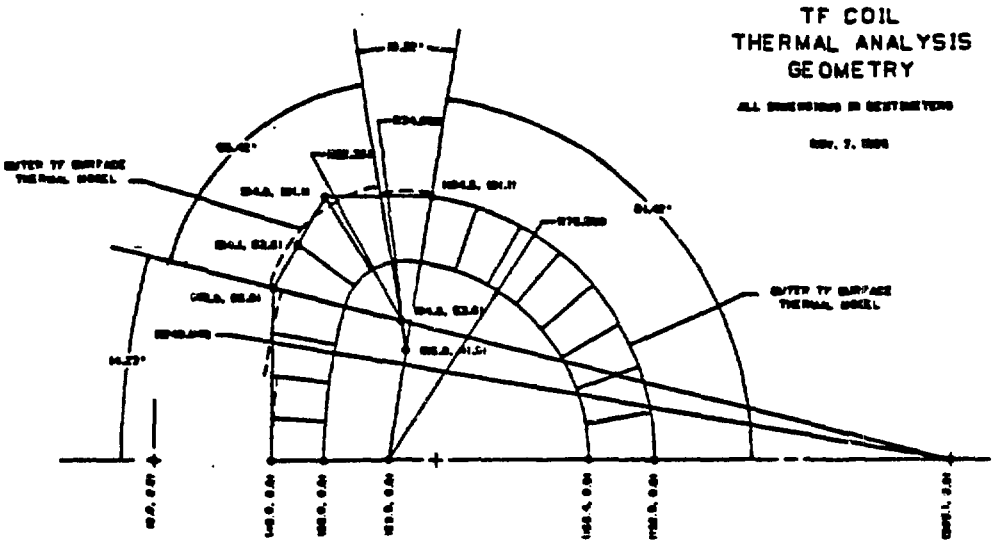

IGNITOR TF CURRENT

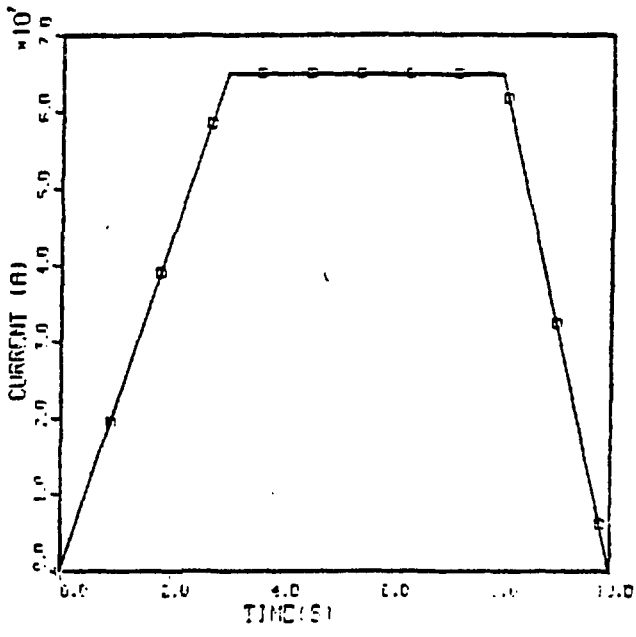

- PHYSICS GUIDELINES REQUIRE PLASMA BURN TIME = 10 T_E. FOR IGNITOR, PLASMA BURN TIME = 5 s.

TEMPERATURE DISTRIBUTION IN THE CENTER POST LEG AS A FUNCTION OF PEAK NUCLEAR HEATING

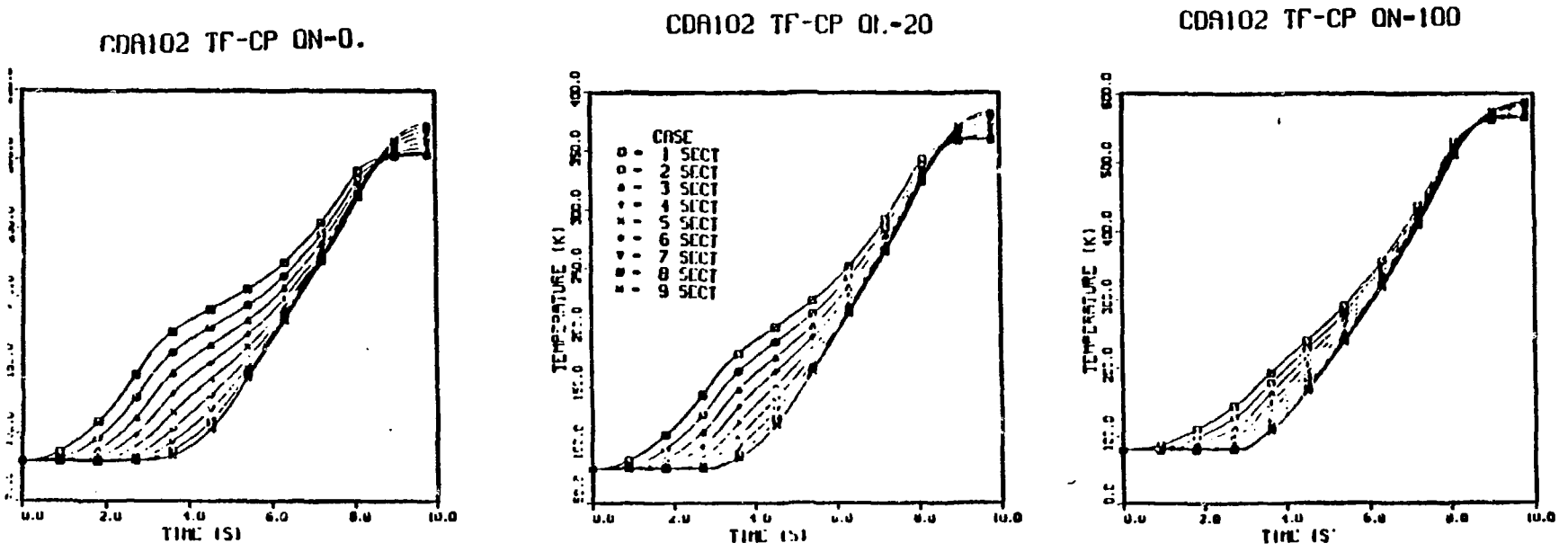

(WITH CDA-102 COPPER)

- PEAK TEMPERATURE OF 490 K IS ATTAINED WITH A PEAK NUCLEAR HEATING RATE OF 100 MW/M^3

- PEAK NUCLEAR HEATING AT $B_{CRITICAL}$ IS 200 MW/M^3. THE PLASMA BURN PERIOD MUST BE REDUCED TO 3.5 s FOR LIMITING PEAK TEMPERATURE TO 500 K.

TEMPERATURE DISTRIBUTION IN THE CENTER POST LEG AS A FUNCTION OF PEAK NUCLEAR HEATING WITH CDA-155 COPPER

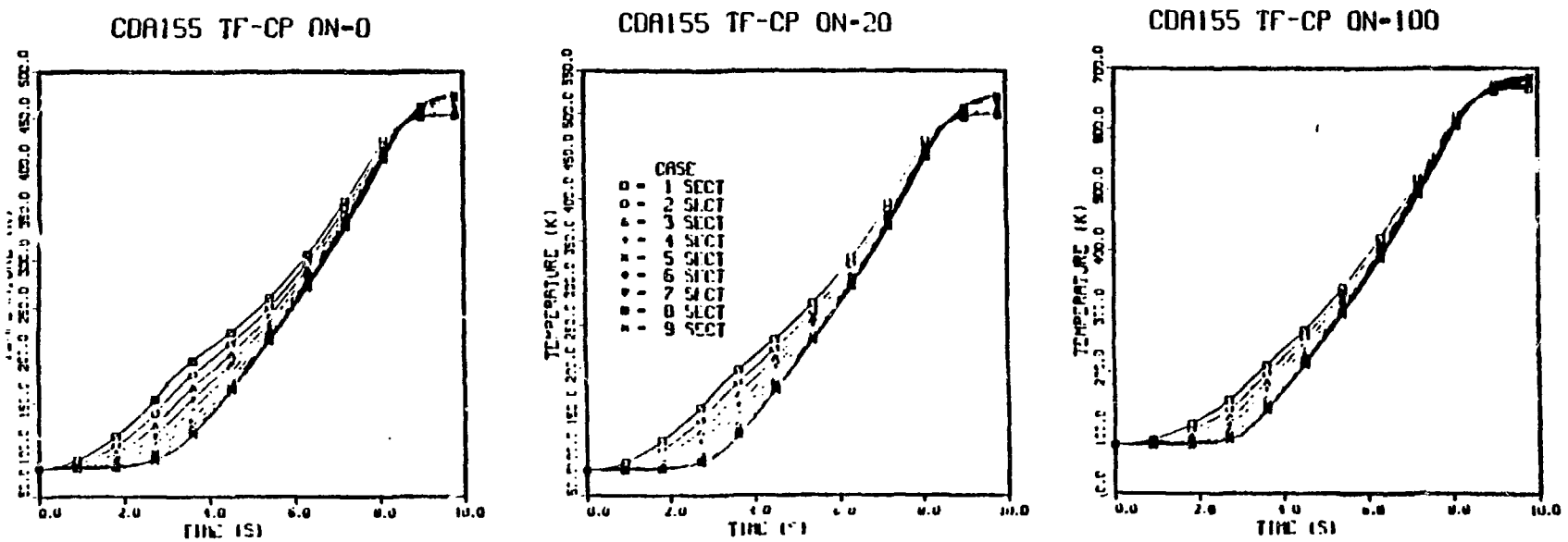

- PEAK TEMPERATURE OF 690 K IS ATTAINED WITH A PEAK NUCLEAR HEATING RATE OF 100 MW/M^3.

- PLASMA BURN PERIOD MUST BE REDUCED TO 2.5 s FOR LIMITING PEAK TEMPERATURE TO 500 K. THIS BURN PERIOD WILL BE FURTHER REDUCED IF NUCLEAR HEAT LOAD IS INCREASED.

POWER CONSUMPTION AS A FUNCTION OF COIL MATERIAL

CDA102 TF-CP I**2*R

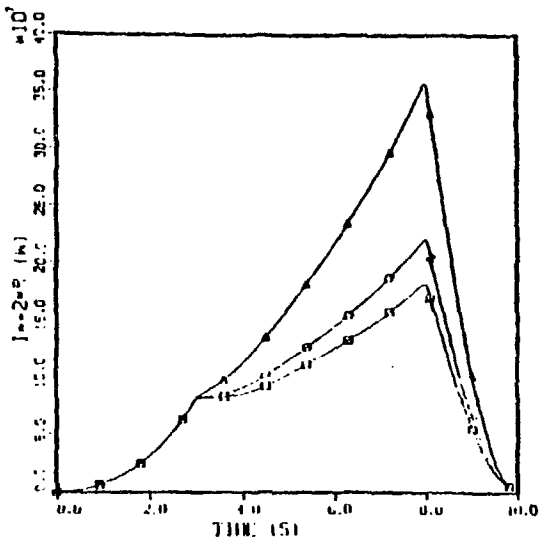

CDA102/155 TF-CP I**2*R

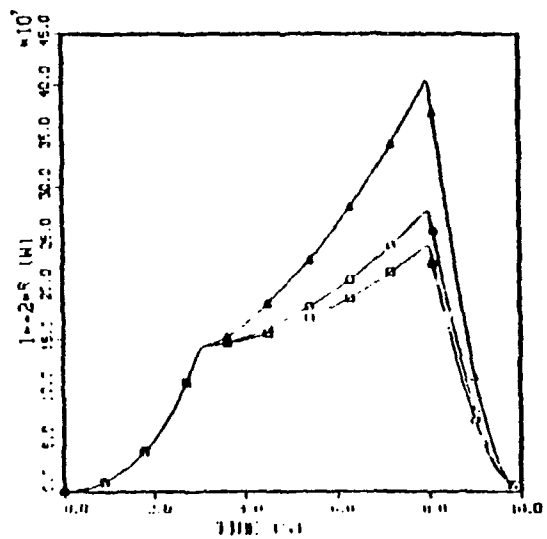

CDA155 TF-CP I**2*R

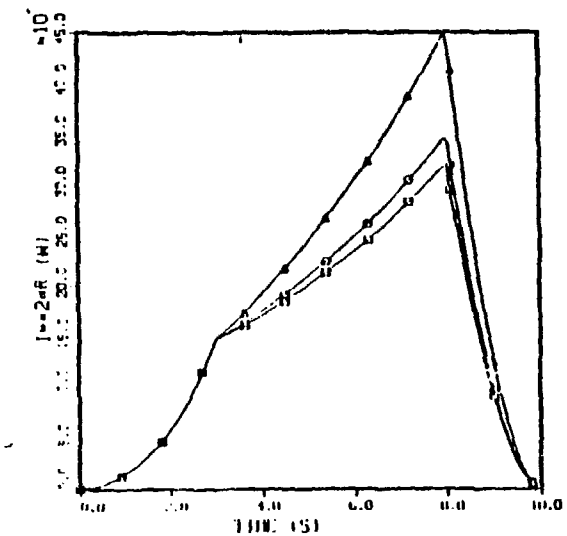

CDA-102 COPPER ALL OVER

CDA-102 COPPER ONLY IN THE VERTICAL LEG

CDA-155 COPPER ALL OVER

□ PEAK NUCLEAR HEATING = 0

○ PEAK NUCLEAR HEATING = 20 MW/M^3

△ PEAK NUCLEAR HEATING = 100 MW/M^3

TOTAL ELECTRIC POWER CONSUMPTION INCREASES WHEN PEAK NUCLEAR HEATING IS INCREASED.

ENERGY CONSUMPTION AS A FUNCTION OF COIL MATERIAL

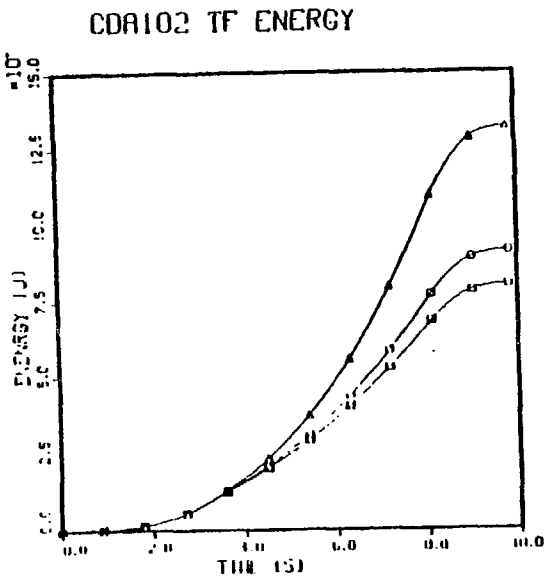

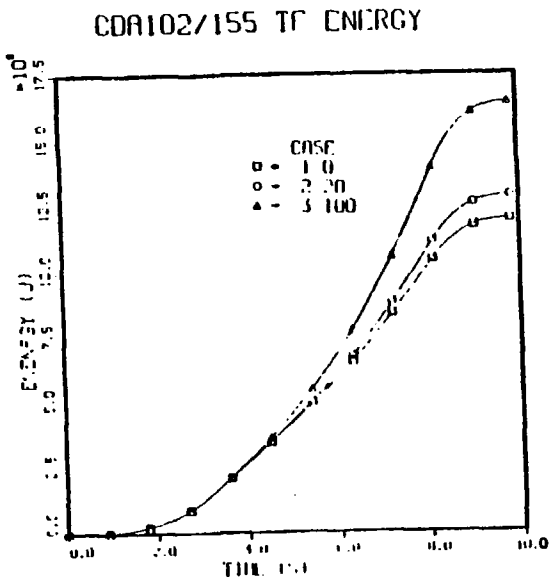

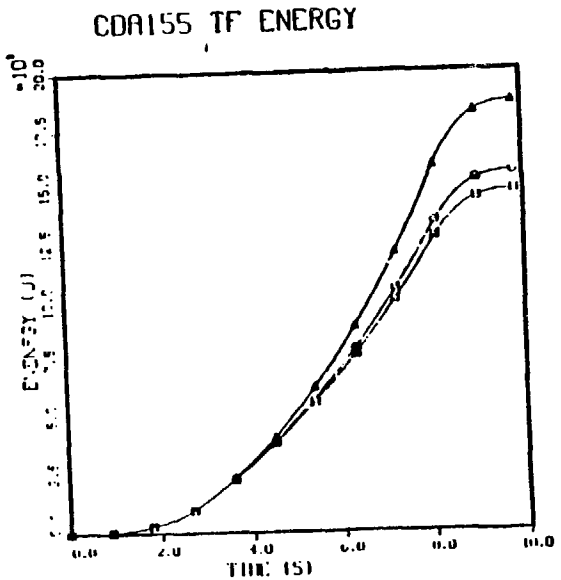

CDA-102 COPPER ALL OVER

CDA-102 COPPER ONLY IN THE VERTICAL LEG

CDA-155 COPPER ALL OVER

□ PEAK NUCLEAR HEATING = 0

o PEAK NUCLEAR HEATING = 20 MW/M^3

Δ PEAK NUCLEAR HEATING = 100 MW/M^3

TOTAL ELECTRIC ENERGY CONSUMPTION INCREASES WHEN PEAK NUCLEAR HEATING IS INCREASED.

MVA REQUIREMENT AS A FUNCTION OF COIL MATERIAL

CDA102 TF MVA

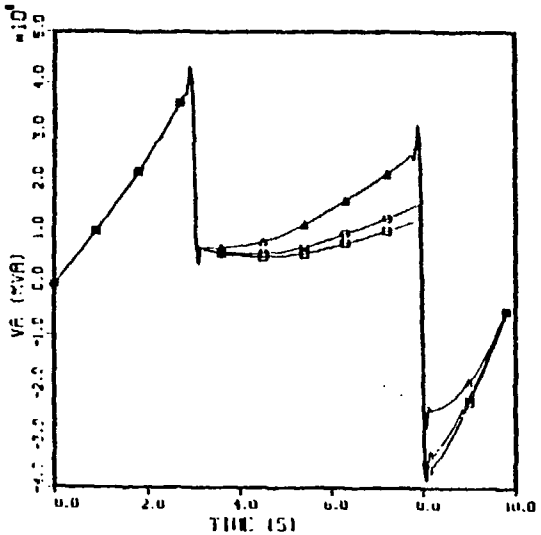

CDA102/155 TF MVA

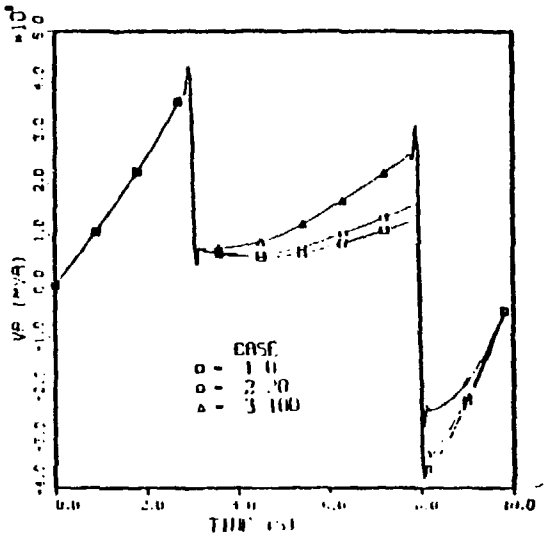

CDA155 TF MVA

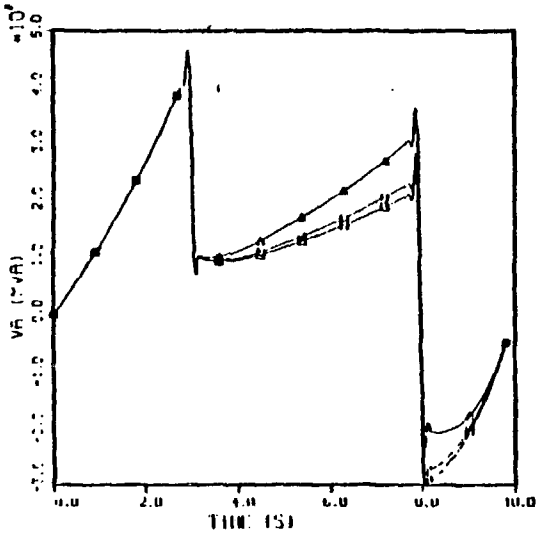

CDA-102 COPPER ALL OVER

CDA-102 COPPER ONLY IN THE VERTICAL LEG

CDA-155 COPPER ALL OVER

□ PEAK NUCLEAR HEATING = 0

o PEAK NUCLEAR HEATING = 20 MW/M^3

Δ PEAK NUCLEAR HEATING = 100 MW/M^3

PEAK MVA REQUIREMENT IS ESTABLISHED BY THE TF CURRENT RAMP-UP REQUIREMENT.

STRUCTURAL ANALYSIS

1. ***Comparison of 2-turn and 1-turn TF Coil***

2. ***Evaluation Of TF Coil Plate For:***
   - ***.Preload***
   - ***.TF Forces***
   - ***.Temperature***

Comparison of 2-turn and 1-turn TF Coil For Preload and TF Forces

- *Average Tresca Stress Higher For 2-turn*
- *Reaction Ring Loads and Stresses Higher For 2-turn*
- *Preload Tends To Concentrate On Innermost Turn Of Magnet Throat*
  - *75 Percent Of Preload Carried By This Turn*

PRELOAD + TF FORCES

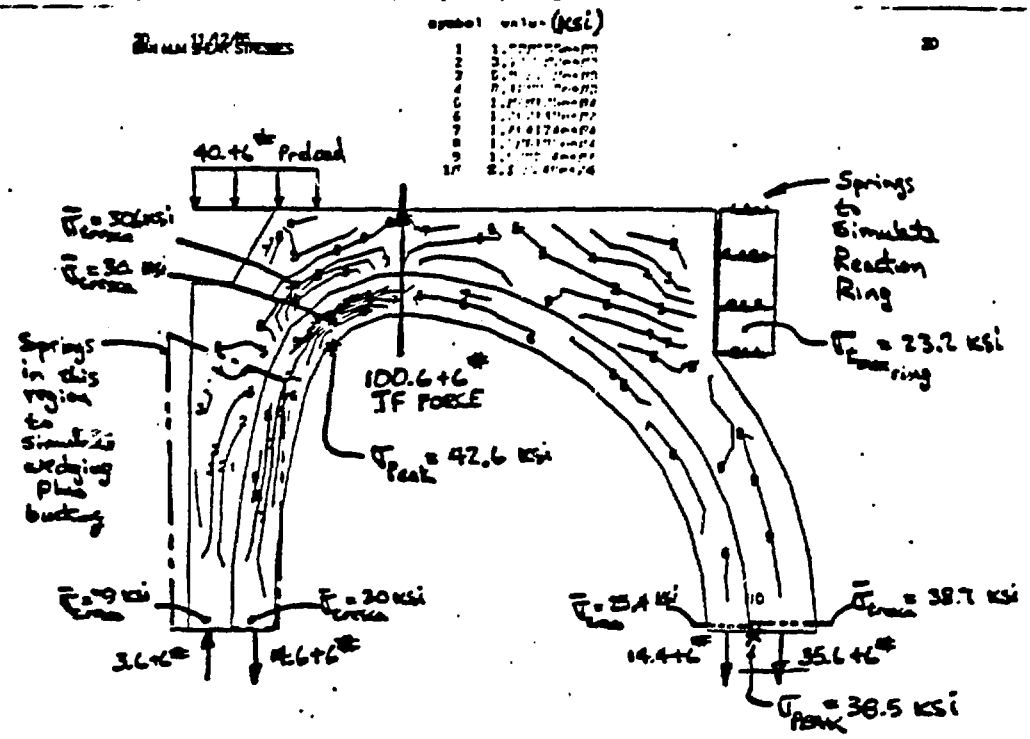

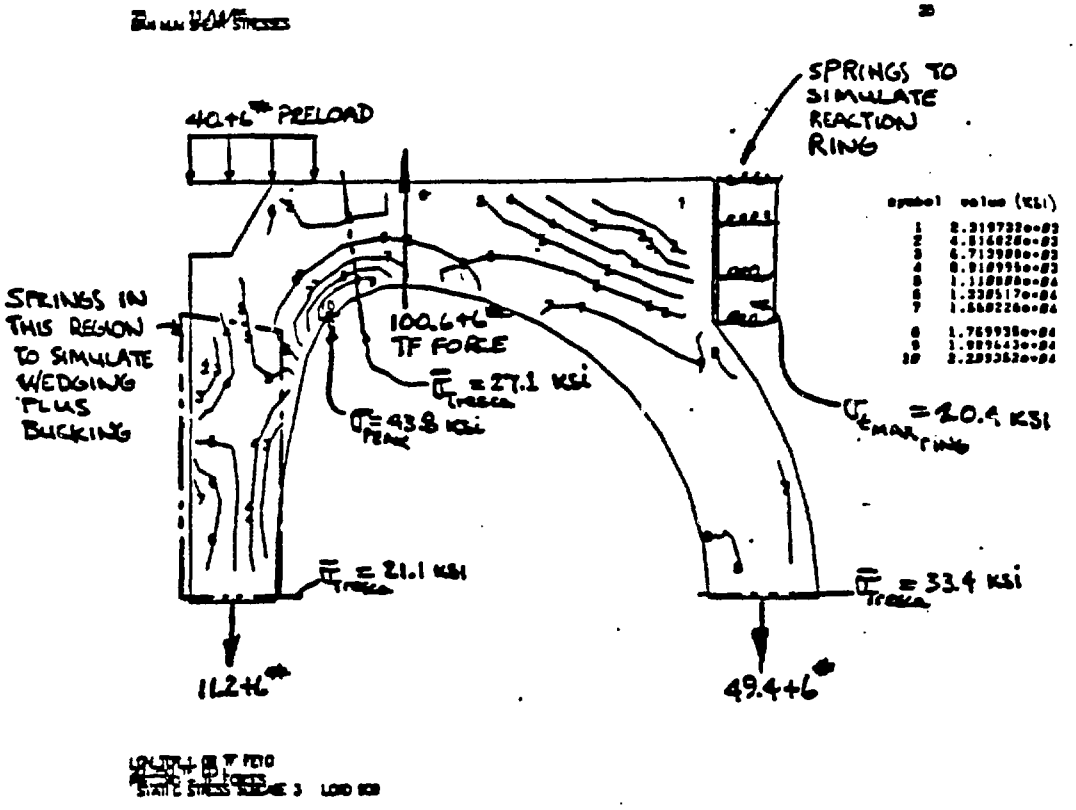

Evaluation Of TF Preload, TF Forces, and Temperature

- *Temperatures From Thermal Analysis, Kalsi*
  - *Ramp-up (3), Flat top (5), Ramp-down (2)*
  - *Material -CDA155*
  - *Evaluations at*
    - *Beginning-of-Burn*
    - *End-of-Burn*
    - *End-of-Cycle*
- *Temperatures Applied To Finite Element Model*
  - *Judgement Used To Estimate Finite Element Distribution*
- *Finite Element Model Is 2-D*
- *Stress Levels, Average and Peak, Acceptable, But Approaching CDA155 Limits*

CDA155 TF-CP ON-20

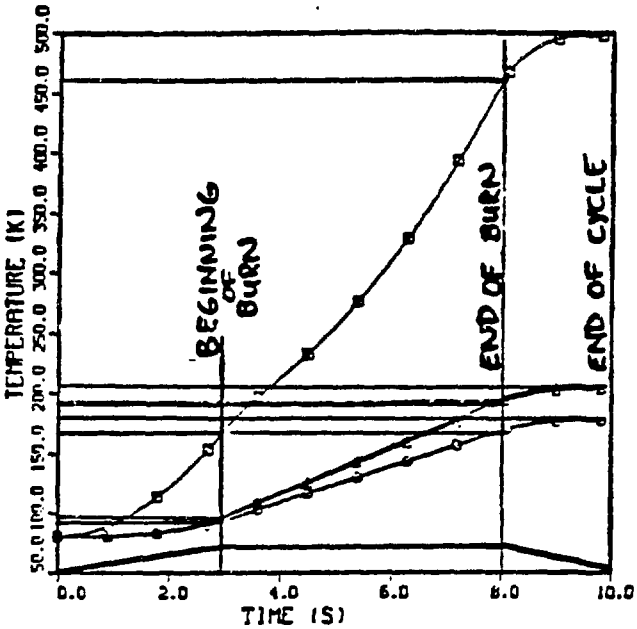

11:54:52 11/12/85

TEMPERATURE PROFILE - ONE-HALF TURN

CDA155 TF-CP (center post) ON-20

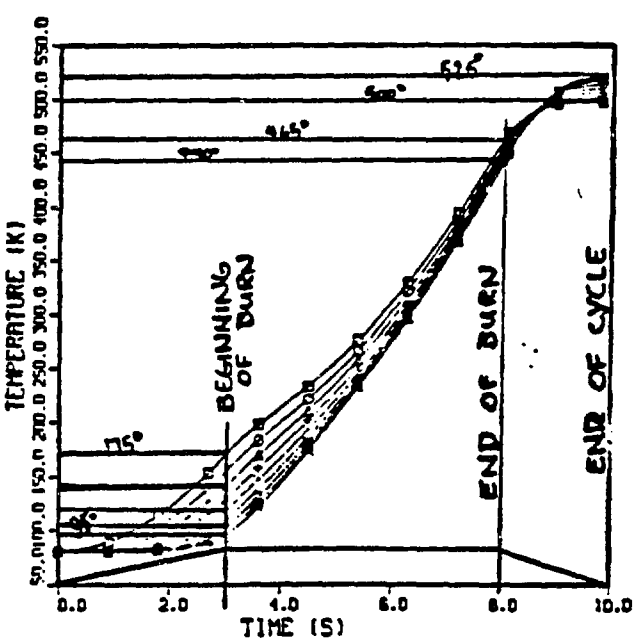

11:25:23 11/12/85

TEMPERATURE PROFILE CENTER POST ONLY

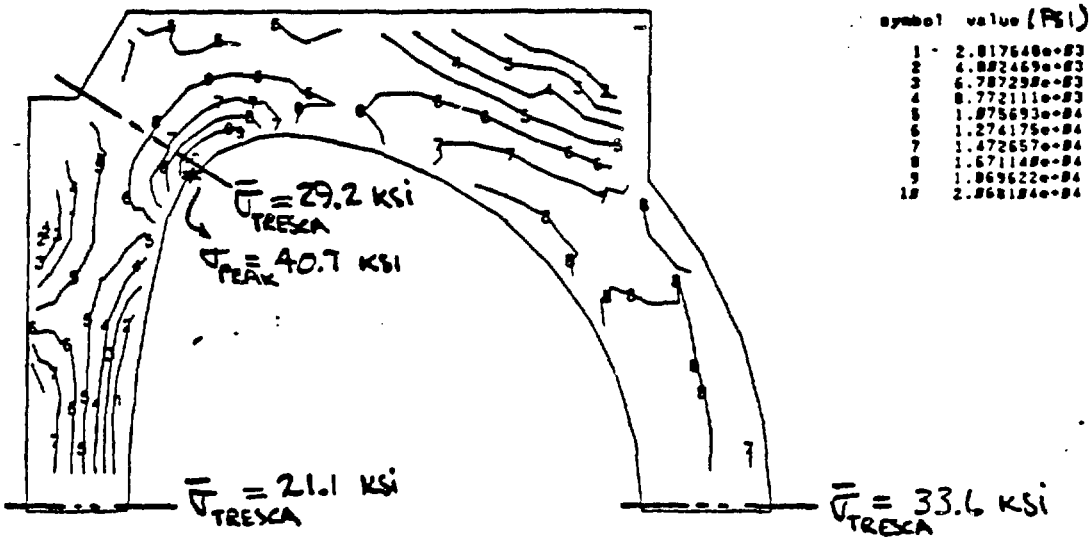

LOAD TOP + OB TF FE10
PRELOAD + TF FORCES + TEMP (BEGINNING OF BURN)
STATIC STRESS SUBCASE 4 LOAD 909

MAX. SHEAR STRESS PLOT FOR
PRELOAD + TF FORCES + TEMPERATURE
AT BEGINNING OF BURN

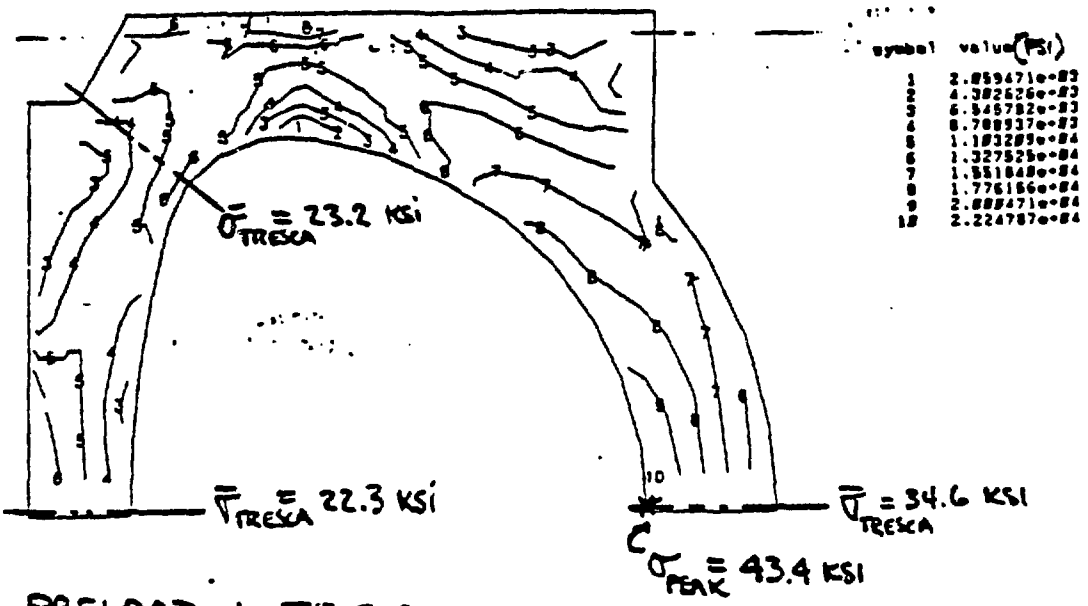

PRELOAD + TF FORCES +
TEMPERATURE @ END OF BURN

LOAD 800 TF FE10
STATIC STRESS SUBCASE 5 LOAD 800

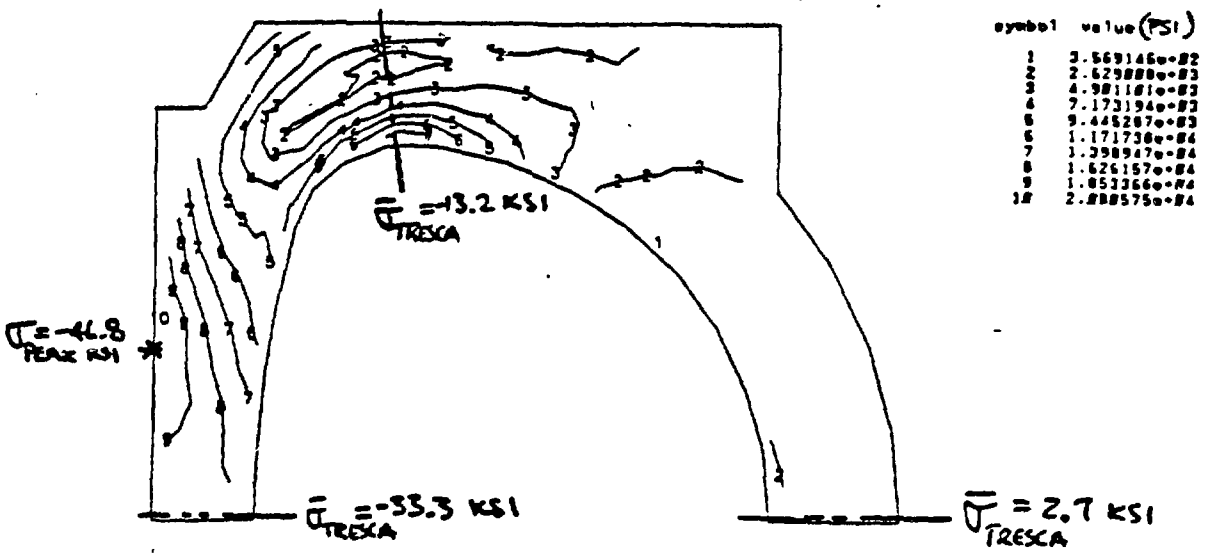

PRELOAD +
TEMPERATURE @ END OF CYCLE

LOAD 800 TF FE10
STATIC STRESS SUBCASE 5 LOAD 800

COMPARISON OF MODEL WITH EXPERIMENTAL DATA ON COOLING TIME WITH LN_2

	MASS (TONNE)	COOLING SURFACE AREA (M^2)	COOLING TIME (H) MODEL[1]	COOLING TIME (H) EXPERIMENT
ALCATOR A	5.5	1.73	3.4	2-3
ALCATOR C[2]	18	5.5	5.8	5.2

1. THE MODEL IS FOR BARE COPPER SURFACE WITHOUT ANY INSULATION
2. ACTUAL NITROGEN CONSUMPTION IS 6.2 TONNE FOR COOLING DOWN TO 80 K. THE MODEL PREDICTS 6.6 TONNE.

VARIOUS METHODS OF COOLING INNER LEG

(WALL LOAD = 8.5 MW/M^2)

METHOD	COOLING TIME (H) (TO 80° K)	
	CDA-102	CDA-155
ACTIVE COOLING; NO CONDUCTION		
- COOLING CHANNEL AT PLASMA SIDE OF TF COIL INNER LEG (1)	2.2	2.4
- COOLING CHANNEL AT OH SIDE OF TF COIL INNER LEG (2)	6.3	6.9
- (BASED ON 50% AREA AVAILABLE FOR COOLANT)	2.8	3.0
NO ACTIVE COOLING, CONDUCTION ONLY		
- NO COOLING CHANNEL (COOLED BY CONDUCTION THROUGH OUTER LEG)	4.5	4.5

1. FOR BARE COPPER. APPROXIMATELY 50% INCREASE IN VALUES FOR 0.040 IN INSULATION

EFFECT OF CONDUCTION ON THE COOLING TIME OF INNER LEG[1]

(WALL LOAD = 1.7 MW/M^2)

METHOD	COOLING TIME (H)	
	CONDUCTION	NONCONDUCTION
COOLING CHANNEL INSIDE OF INBOARD AND OUTBOARD OF TF COIL (5% OF TOTAL AREA)	1.8 [2]	2.6

1. MATERIAL IS CDA-155 FOR BOTH INBOARD AND OUTBOARD LEGS.
2. THIS TIME WILL NOT REDUCE BY MUCH IF THE INBOARD MATERIAL SWITCHES TO CDA-102

A SLIDING JOINT CONCEPT FOR TOROIDAL FIELD COILS OF A TOKAMAK

ORNL-DWG 85-3433FED

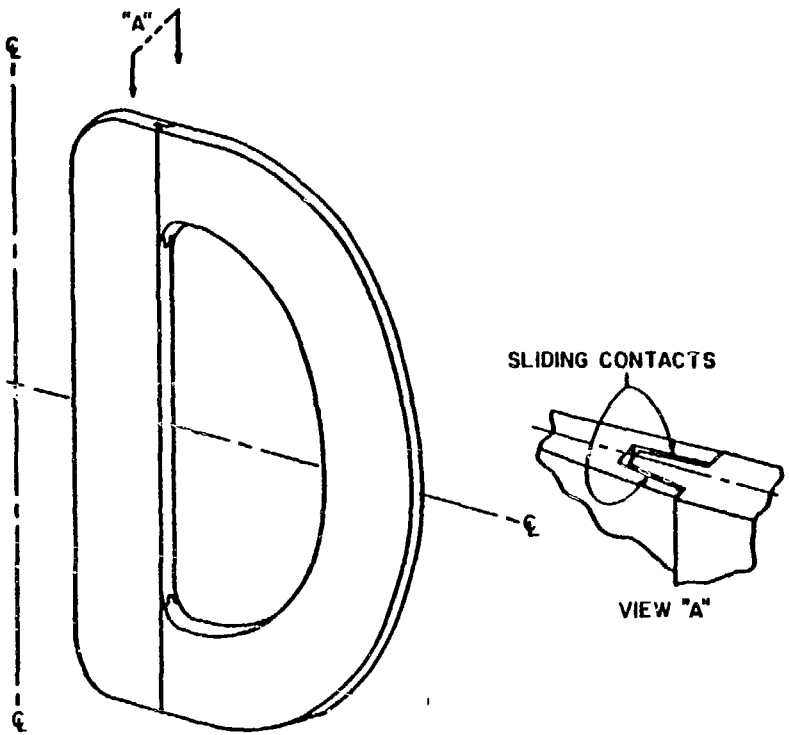

A TF COIL TURN WITH TWO SLIDING JOINTS.

ORNL-DWG 85-3434FED

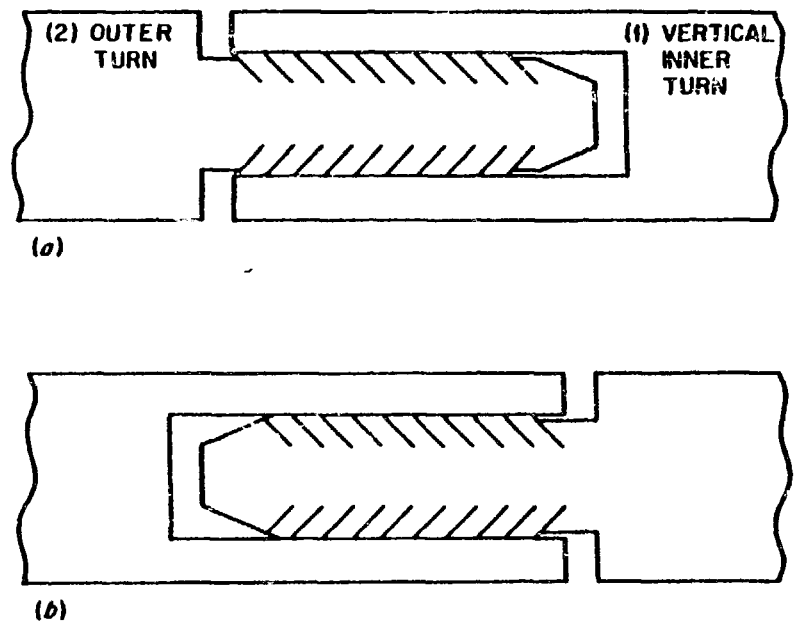

LAP JOINT CONFIGURATION.

THIS IS A POSSIBLE CONFIGURATION FOR UTILIZING FINGERJOINT CONCEPT IN A LAP JOINT

STATIC TEST RESULTS OF A HARD COPPER (BeCu) FINGER JOINT

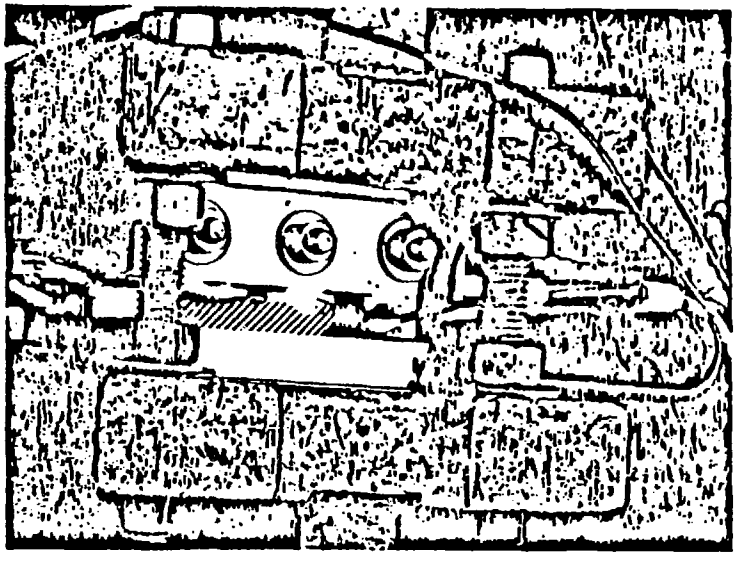

BeCu FINGER JOINT UNDER TEST

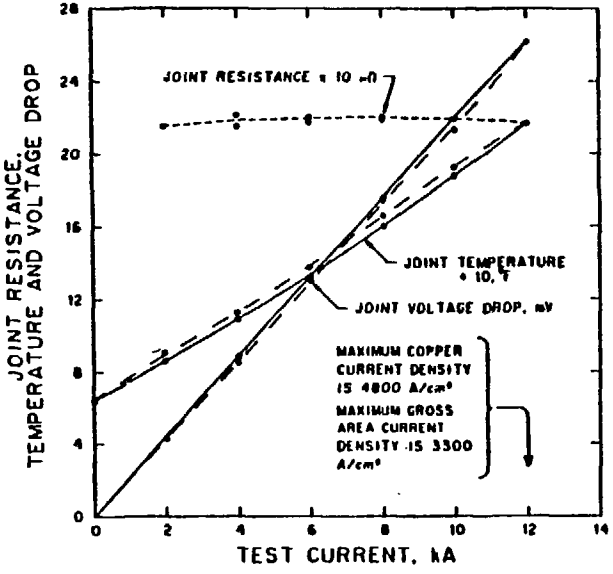

- THE FINGER JOINT WAS TESTED WITH ACTIVE WATER COOLING
- THE JOINT ACHIEVED A NET CURRENT DENSITY OF 3300 A/cm^2 IN THE STATIC MODE
- PEAK TEMPERATURE (216 F) OCCURS AT ROOT OF FINGERS
- THIS JOINT IS EXPECTED TO MEET PPPL ISP COIL REQUIREMENTS
- THE JOINT WILL BE SENT TO PPPL FOR TESTING IN THEIR TEST FACILITY

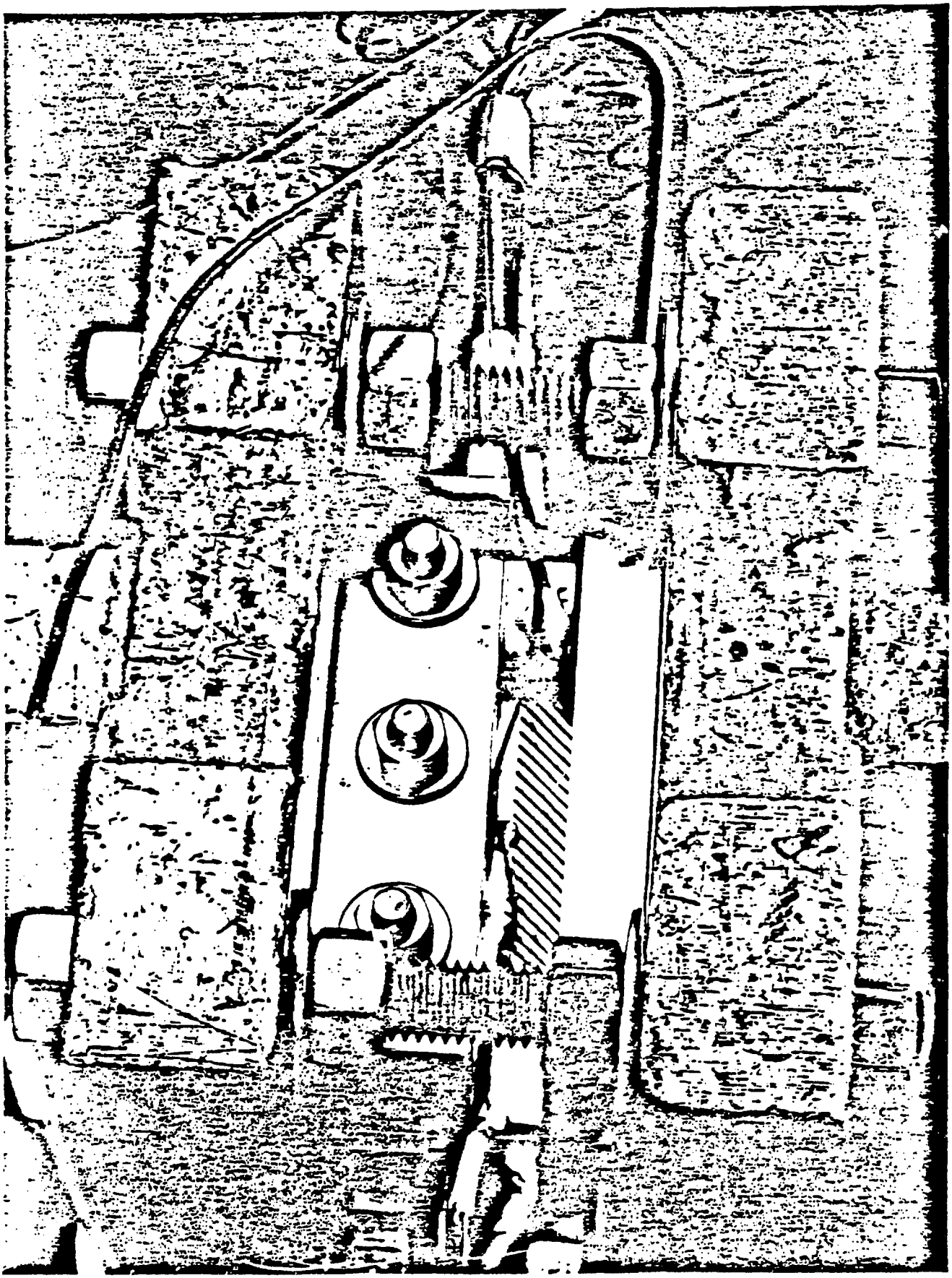

MAINTENANCE

THE MAINTENANCE PHILOSOPHY IS BASED ON REMOTE OPERATIONS IN THE TEST CELL AND CONTACT OPERATIONS IN THE EQUIPMENT CELLS

UTILIZATION OF REMOTE MAINTENANCE EQUIPMENT

3 PHASES OF REACTOR OPERATION ⇨

HYDROG.	D-D	D-T

REACTOR SHAKEDOWN OPERATIONS TO ELIMINATE INFANT MORTALITY PROBLEMS; MOCKUP TESTING OF REMOTE HANDLING EQUIPMENT

REPLACEMENT (OR REPAIR) IS PLANNED FOR LIFE-LIMITED COMPONENTS BY UTILIZING A MODULAR DESIGN APPROACH WITH SIMPLE, REMOTELY OPERABLE, INTERFACES

- ALL OPERATIONS IN THE TEST CELL ARE DONE REMOTELY AND INCLUDE
  - REPLACEMENT OF RF ANTENNAE AND SHIELDS
  - DECOUPLING OF DIAGNOSTIC AND FUELING PENETRATIONS
  - REMOVAL OF ALL PORT COVERS
  - REPLACEMENT/REFURBISHMENT OF FIRST WALL, MIRRORS, AND WINDOWS
  - IN-VESSEL/EX-VESSEL INSPECTIONS
  - EQUIPMENT ADJUSTMENTS/MODIFICATIONS AND VACUUM/COOLANT LEAK REPAIRS

- MAINTENANCE SCENARIOS <u>DO NOT INCLUDE</u> REPLACING MAJOR COMPONENTS WHICH ARE NOT AFFECTED BY WEAROUT (I.E., TF/PF/OH COILS, VACUUM VESSEL, STRUCTURE)
  - EXTENSIVE QUALITY ASSURANCE DURING FABRICATION AND INSTALLATION
  - CORRECTION OF EQUIPMENT INFANT MORTALITY PROBLEMS PRIOR TO TEST CELL ACTIVATION

THE IGNITOR REACTOR IS BEING DESIGNED AS A 60 TONNE MODULE WHICH IS FACTORY ASSEMBLED; THE OUTBOARD PF COILS AND THE PRELOAD STRUCTURE ARE INSTALLED ON SITE

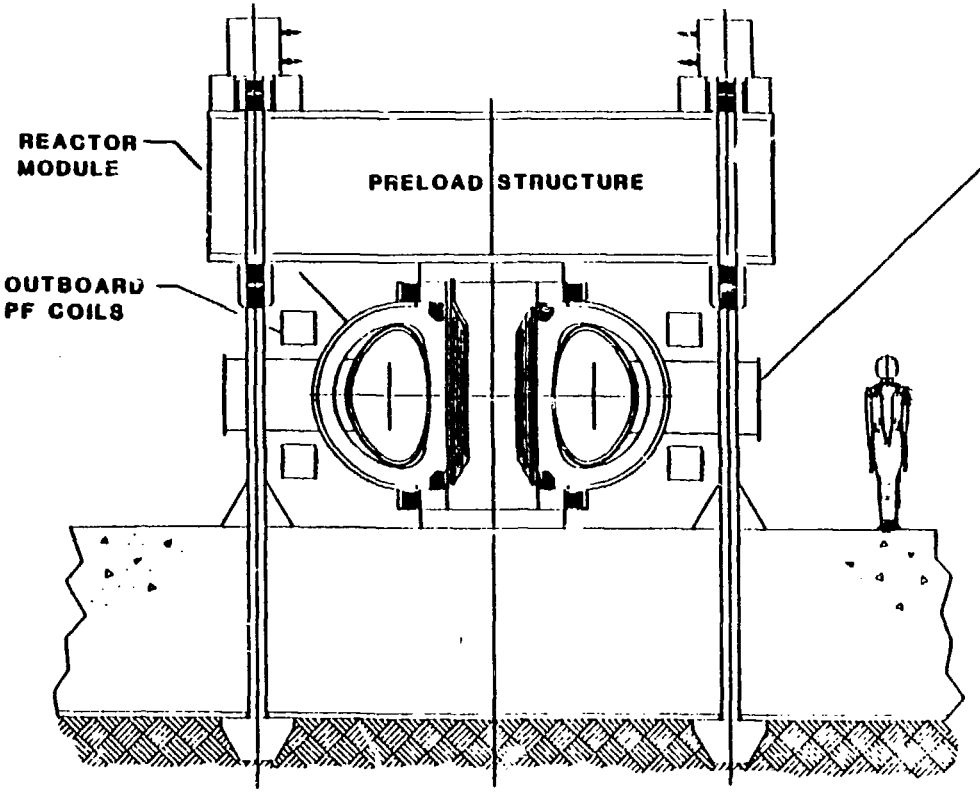

24 AVAILABLE VESSEL PORTS

- 2 FUELING
- 2 INSPECTION
- 2 VACUUM
- 5 RF
- 13 DIAGNOSTICS

FIRST WALL REPAIR

- THE IGNITOR PORT OPENINGS ARE 20 X 80 CM AND ARE SUFFICIENT FOR UNI-LATERAL MANIPULATORS OPERATING IN PAIRS THROUGH 12 (ALTERNATE) PORTS

MODIFICATIONS TO EXISTING MANIPULATOR

- REMOVE 1 ARM
- RE-ORIENT SHOULDER MOUNT 90°
- SHORTEN UPPER & LOWER ARM
- ADD FORCE REFLECTION

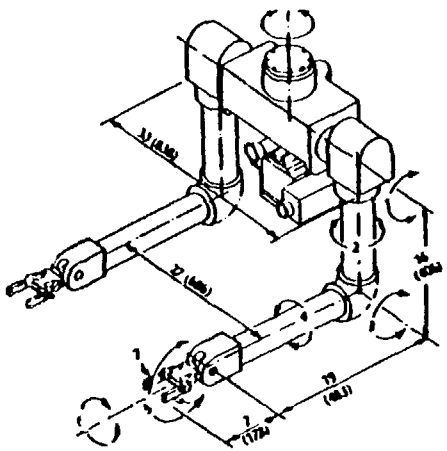

DIMENSIONS AND CAPACITIES

Upper Arm Length	406 MM	16 IN
Lower Arm Length	483 MM	19 IN
Extended Reach	1067 MM	42 IN
Maximum Tong Opening	64 MM	2.5 IN
Total Slave Assembly Weight	59 KG.	130 LB
Slave Arm Weight	21 KG.	47 LB
Lifting Capacity (Arm Horizontal)*	10 KG.	22 LB

*Variable – based on customer speed/load requirements.

A PRELIMINARY TEST CELL ARRANGEMENT WITH NO DEVICE SHIELD HAS BEEN DEVELOPED; BASED ON LAYDOWN AREAS, PERIPHERAL REACTOR EQUIPMENT SPACE, AND REMOTE OPERATIONS

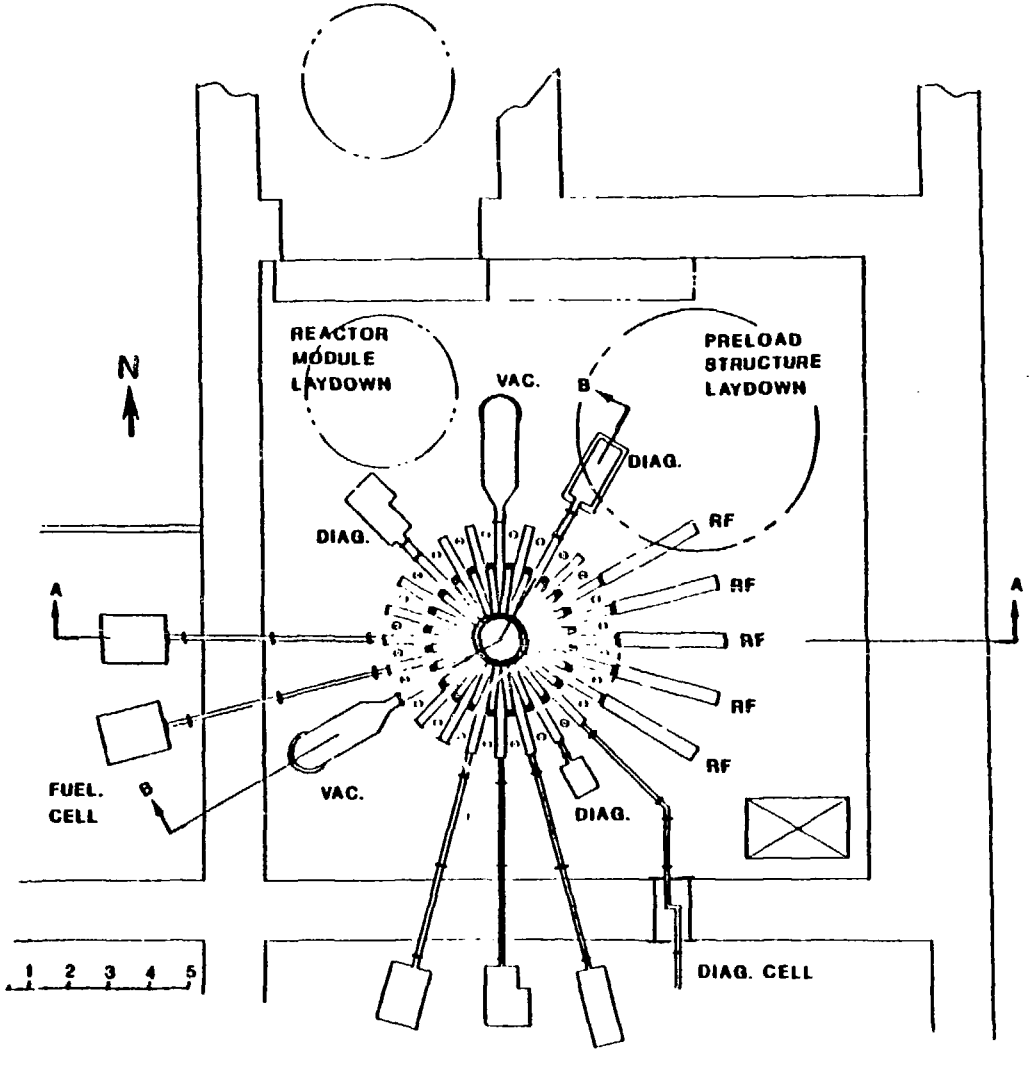

IGNITOR TEST CELL - GROUND LEVEL PLAN

- FUEL INJECTORS AND MOST DIAGNOSTICS LOCATED IN EQUIPMENT CELLS BEHIND TEST CELL SHIELD
- CERTAIN DIAGNOSTICS WILL BE IN THE TEST CELL; NORTH SIDE IS FOR LARGE DIAGNOSTIC EQUIPMENT
- TEST CELL SIZE IS 15L X 15 W X 16.5H

TEST CELL EQUIPMENT (I.E., CERTAIN DIAGNOSTICS AND RF) ARE REPLACED/REPAIRED IN-SITU; MOST EQUIPMENT IS OUT OF THE TEST CELL

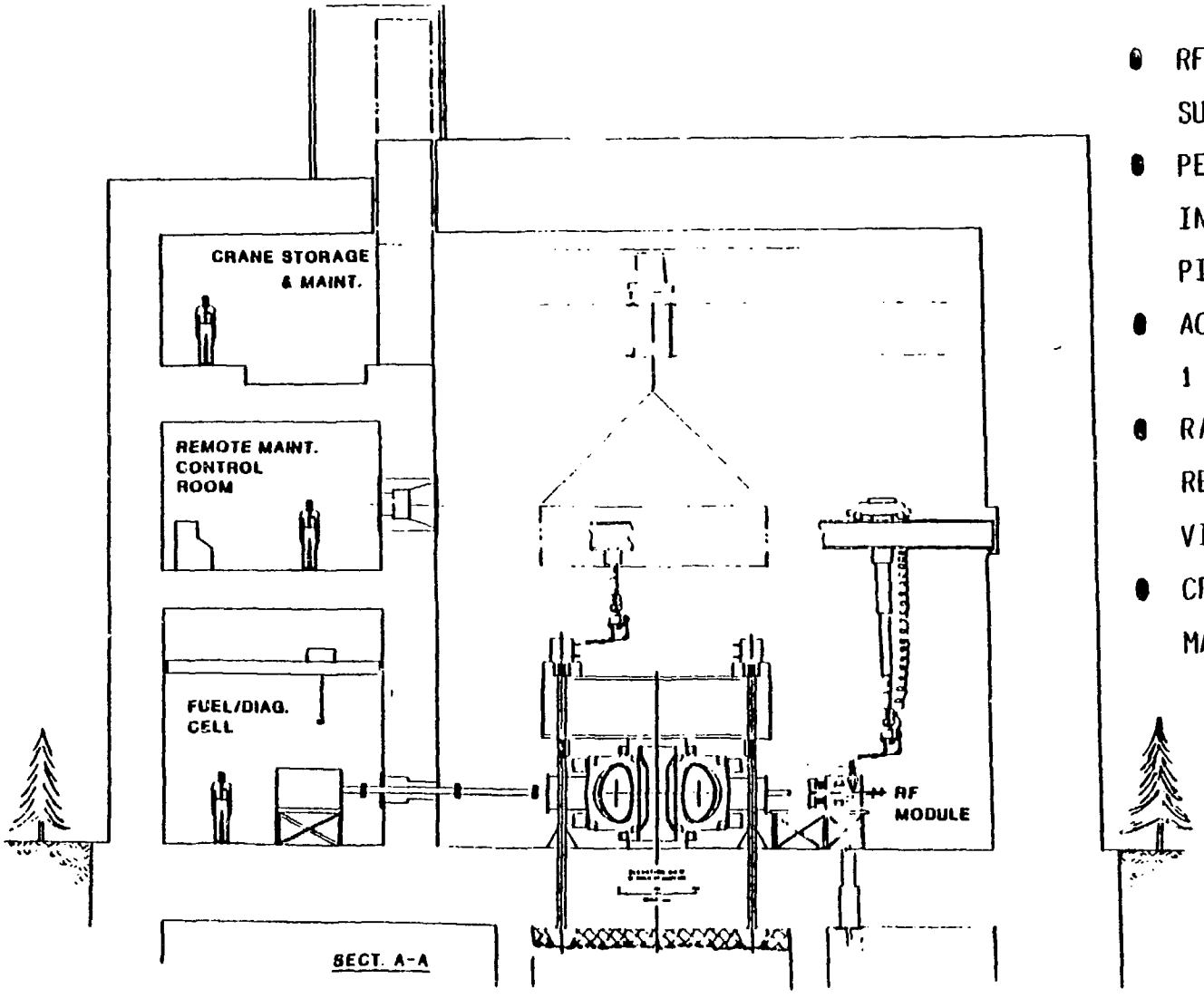

- RF MODULES ARE RAIL MOUNTED ON SUPPORT PLATFORMS
- PERIPHERAL EQUIPMENT INTERFACES UTILIZE DEMOUNTABLE PIPE COUPLINGS
- ACCESS TO EQUIPMENT CELLS 1 DAY AFTER SHUTDOWN (*)
- R/M OPERATORS SUPPLEMENT REMOTE VIEWING WITH DIRECT VIEWING
- CRANE SYSTEMS HAVE HANDS-ON MAINTENANCE

(*) NEUTRONIC ANALYSIS TO ESTABLISH SHIELD REQ'MTS & TO MAP ACTIVATION

CERTAIN DIAGNOSTIC EQUIPMENT WILL BE LOCATED IN THE TEST CELL

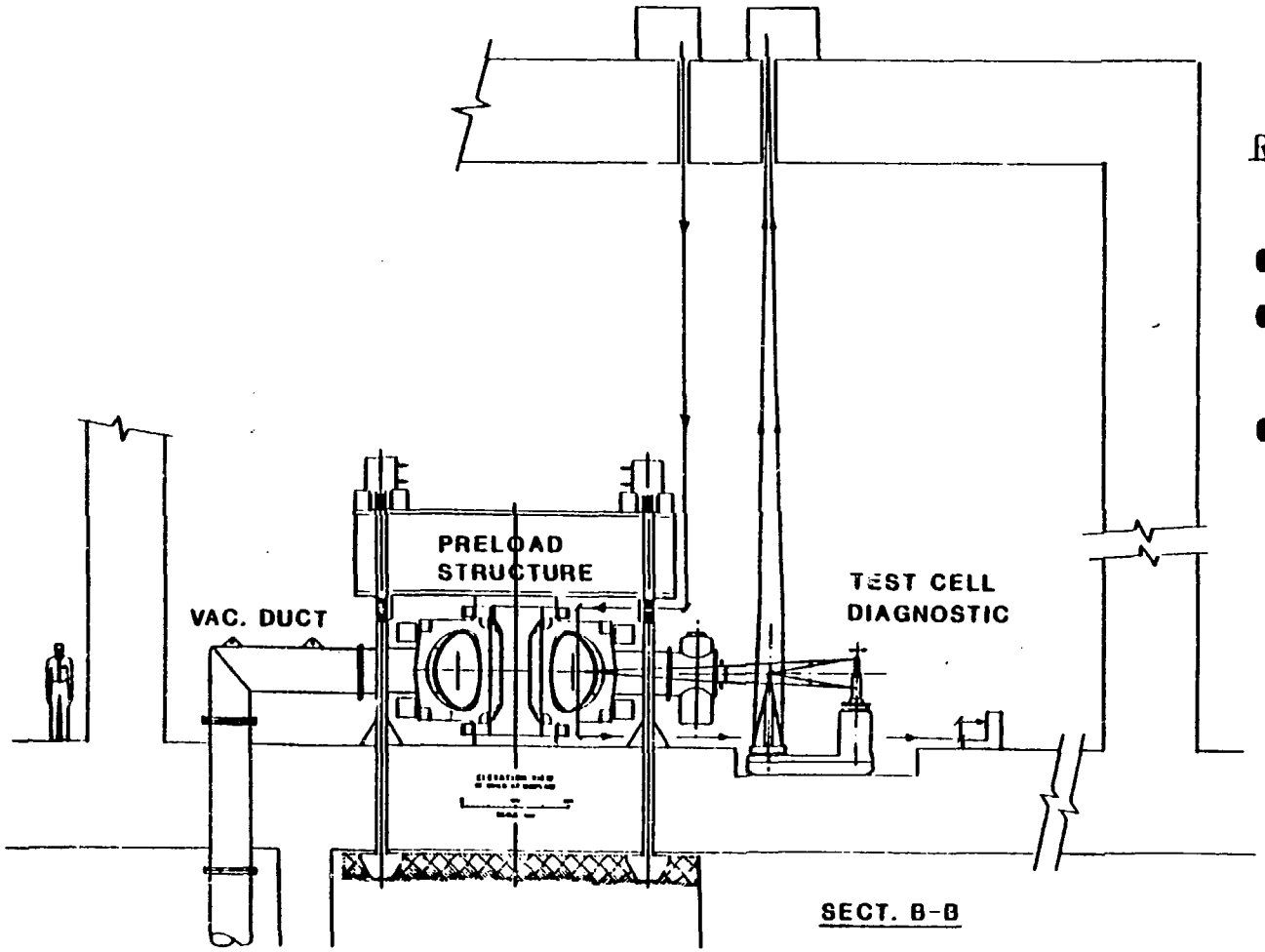

REQUIREMENTS

- ACCESS TO EQUIPMENT
- REPLACEABILITY OF IN-VESSEL & EX-VESSEL MIRRORS
- ACCESS TO PLASMA CHAMBER WINDOWS

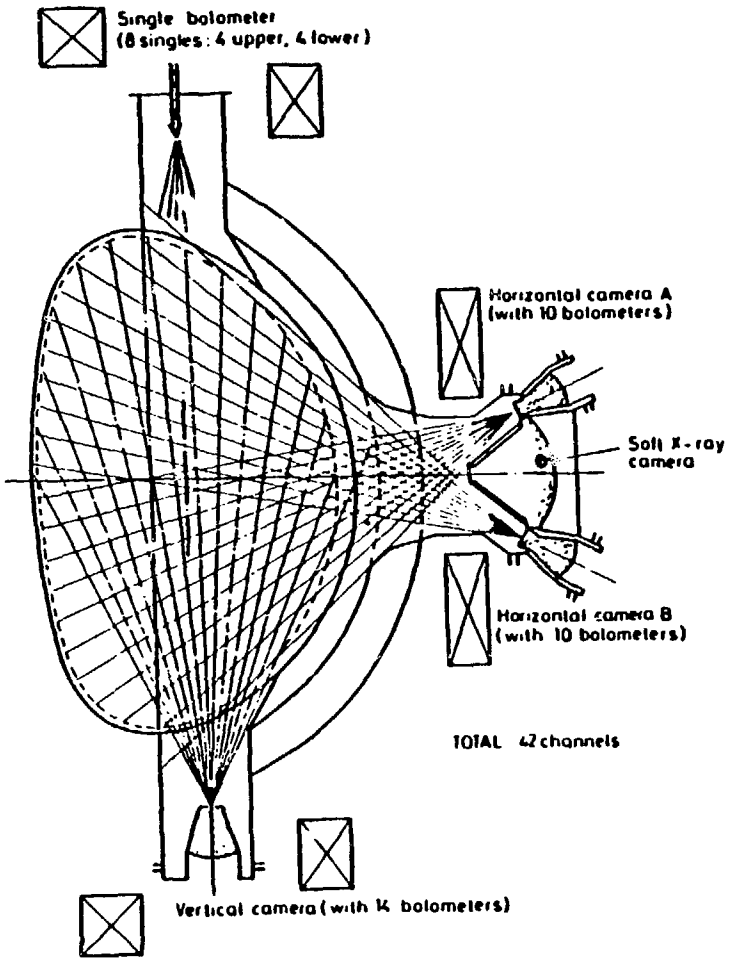

JET BOLOMETER (KB1) SHOWING THE TWO LATERIAL & ONE VERTICAL CAMERAS AND A TYPICAL SINGLE BOLOMETER

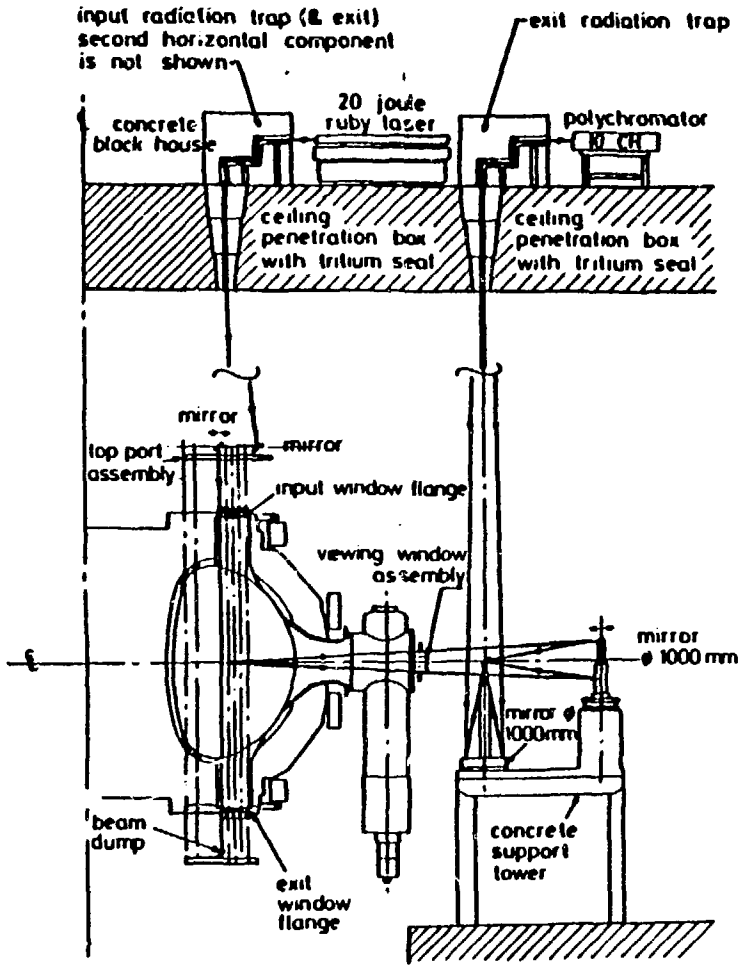

JET SINGLE POINT THOMSON SCATTERING SYSTEM (KE1)

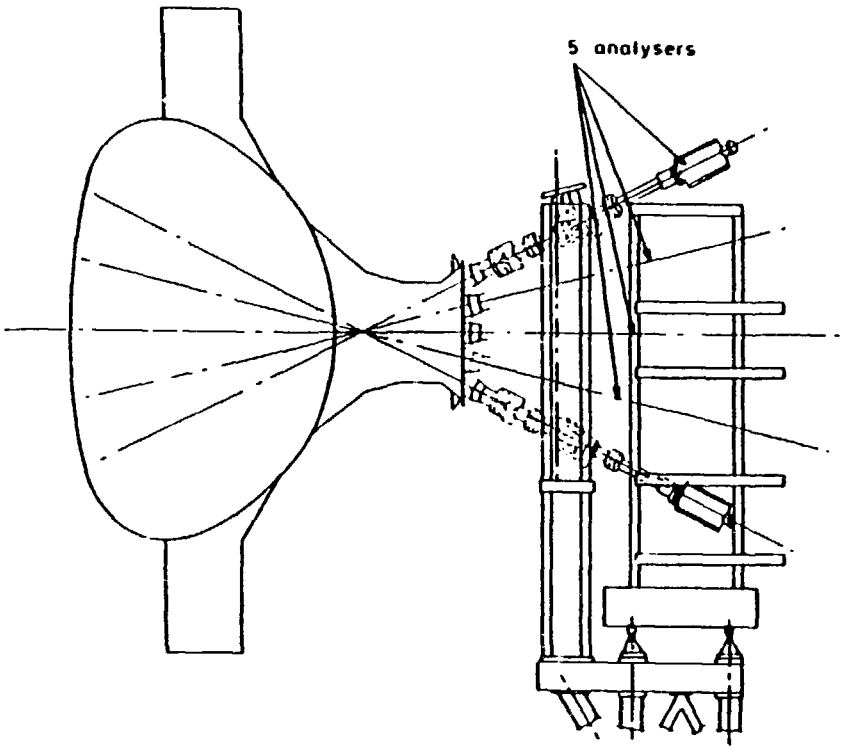

JET NEUTRAL PARTICLE ANALYZER ARRAY (KR1)

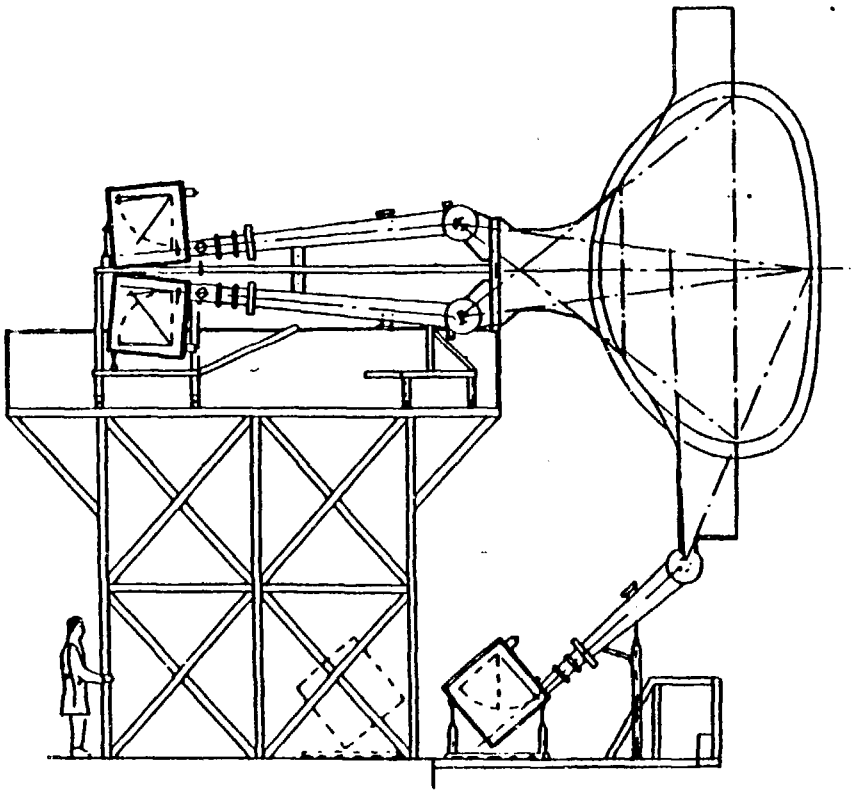

JET GRAZING INDIVIDUAL VACUUM
ULTRA-VIOLET SPECTROSCOPY (KT1)

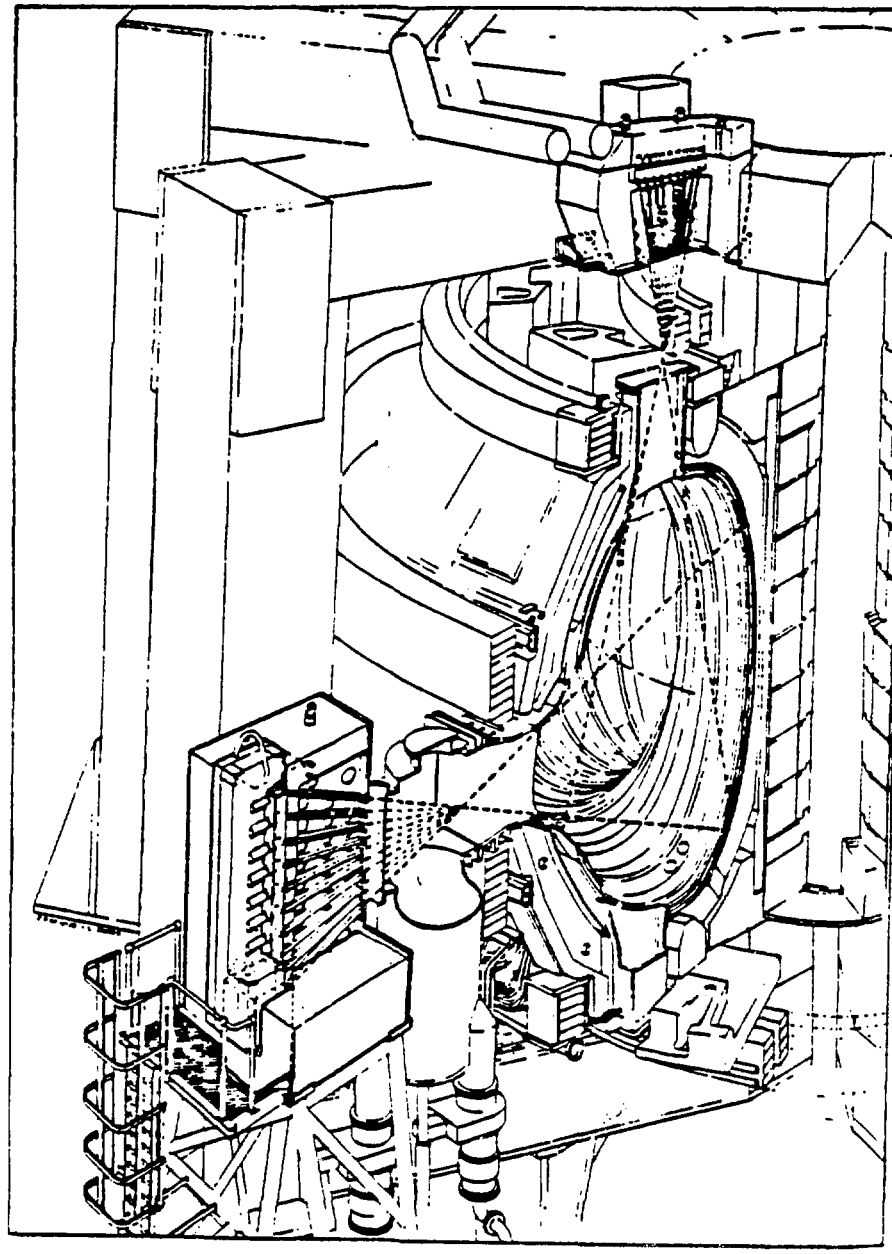

JET NEUTRON YIELD PROFILE MEASURING SYSTEM (KN3)