209
10-2-81

Dr. 3054

MASTER

Y-2248

UCC-ND

NUCLEAR DIVISION

UNION CARBIDE

B7464

IMPACT STRENGTH OF THE URANIUM-6 WEIGHT PERCENT NIOBIUM ALLOY BETWEEN -198° AND +200°C

R. C. Anderson

September 1981

OPERATED BY
UNION CARBIDE CORPORATION
FOR THE UNITED STATES
DEPARTMENT OF ENERGY

DISTRIBUTION OF THIS DOCUMENT IS UNLIMITED

DISCLAIMER

This report was prepared as an account of work sponsored by an agency of the United States Government. Neither the United States Government nor any agency Thereof, nor any of their employees, makes any warranty, express or implied, or assumes any legal liability or responsibility for the accuracy, completeness, or usefulness of any information, apparatus, product, or process disclosed, or represents that its use would not infringe privately owned rights. Reference herein to any specific commercial product, process, or service by trade name, trademark, manufacturer, or otherwise does not necessarily constitute or imply its endorsement, recommendation, or favoring by the United States Government or any agency thereof. The views and opinions of authors expressed herein do not necessarily state or reflect those of the United States Government or any agency thereof.

DISCLAIMER

Portions of this document may be illegible in electronic image products. Images are produced from the best available original document.

Printed in the United States of America. Available from
National Technical Information Service
U.S. Department of Commerce
5285 Port Royal Road, Springfield, Virginia 22161
NTIS price codes—Printed Copy: A02 Microfiche A01

DISCLAIMER

This report was prepared as an account of work sponsored by an agency of the United States Government. Neither the United States Government nor any agency thereof, nor any of their employees, makes any warranty, express or implied, or assumes any legal liability or responsibility for the accuracy, completeness, or usefulness of any information, apparatus, product, or process disclosed, or represents that its use would not infringe privately owned rights. Reference herein to any specific commercial product, process, or service by trade name, trademark, manufacturer, or otherwise, does not necessarily constitute or imply its endorsement, recommendation, or favoring by the United States Government or any agency thereof. The views and opinions of authors expressed herein do not necessarily state or reflect those of the United States Government or any agency thereof.

Date of Issue: September 28, 1981
Distribution Category: UC-25

Y-2248

IMPACT STRENGTH OF THE URANIUM-6 WEIGHT PERCENT NIOBIUM ALLOY BETWEEN - 198° AND +200°C

R. C. Anderson

Metals and Ceramics Department
Y-12 Development Division

DISCLAIMER

This book was prepared as an account of work sponsored by an agency of the United States Government. Neither the United States Government nor any agency thereof, nor any of their employees, makes any warranty, express or implied, or assumes any legal liability or responsibility for the accuracy, completeness, or usefulness of any information, apparatus, product, or process disclosed, or represents that its use would not infringe privately owned rights. Refererce herein to any specific commercial product, process, or service by trade name, trademark, manufacturer, or otherwise, does not necessarily constitute or imply its endorsement, recommendation, or favoring by the United States Government or any agency thereof. The views and opinions of authors expressed herein do not necessarily state or reflect those of the United States Government or any agency thereof.

Oak Ridge Y-12 Plant
P. O. Box Y, Oak Ridge, Tennessee 37830

Prepared for the Department of Energy
Under US Government Contract W-7405-eng-26

DISTRIBUTION OF THIS DOCUMENT IS UNLIMITED

ABSTRACT

A study was conducted to determine if a ductile-to-brittle transition existed for the uranium-6 wt % niobium (U-6Nb) alloy. Standard V-notched Charpy bars were made from both solution-quenched and solution-quenched and aged U-6Nb alloy and were tested between −198° and +200°C. It was found that a sharp ductile-brittle transition does not exist for the alloy. A linear relationship existed between test temperature and impact strength, and the alloy retained a significant amount of impact strength even at very low temperatures.

CONTENTS

SUMMARY 4

INTRODUCTION 5

IMPACT STRENGTH OF URANIUM-6 WEIGHT PERCENT NIOBIUM ALLOY BETWEEN -198° AND +200°C 6

Experimental Work 6
- Alloy Preparation 6
- Impact Testing 7

Results 9
- Solution-Quenched Condition 9
- Solution-Quenched and Aged Condition 9
- Discussion of Results 9

Conclusions 15

REFERENCES 16

ACKNOWLEDGMENTS 17

SUMMARY

Uranium-6 wt % niobium (U-6Nb) alloy does not exhibit a sharp ductile-to-brittle transition in the solution-quenched or solution-quenched and aged condition (200°C, 2 hours) over the temperature range investigated (−198° to +200°C). The alloy retains a significant amount of impact strength at low temperatures. The impact strength of the solution-quenched alloy is higher than that for the alloy in the aged condition. Heating the solution-quenched alloy above 100°C caused the impact strength to plateau, probably because the alloy aged during heating to the measurement temperature or to transformation of the α'' martensite structure to the γ_O martensite structure.

INTRODUCTION

High impact strength is a prerequisite for many alloy applications. The objective of this work, performed at the Oak Ridge Y-12 Plant,[a] was to make V-notched Charpy impact measurements for the U-6Nb alloy in the solution-quenched condition and the solution-quenched and aged (200°C, 2 hours) condition as a function of temperature between −198° and +200°C.

Because the major emphasis of this report was to determine if a ductile-to-brittle transition existed in U-6Nb alloy, the process used to produce the alloy is not discussed in detail.

(a) Operated by the Union Carbide Corporation, Nuclear Division, for the Department of Energy.

IMPACT STRENGTH OF URANIUM-6 WEIGHT PERCENT NIOBIUM ALLOY BETWEEN -198° AND +200°C

EXPERIMENTAL WORK

Alloy Preparation

The melting sequence consisted of vacuum-induction melting, skull casting, and final arc melting.[1] The induction melt charge, consisting of one-third massive scrap and two-thirds virgin uranium, was cast into semicircular logs which contained 2 wt % niobium alloy. Two half logs, along with sufficient virgin niobium to achieve the 6 wt % composition, were welded together to form an electrode for the skull caster. The U-6Nb alloy logs, which were cast from the skull melter, were used as electrodes for the final vacuum arc melt. A flow diagram for the melting sequence is depicted in Figure 1.

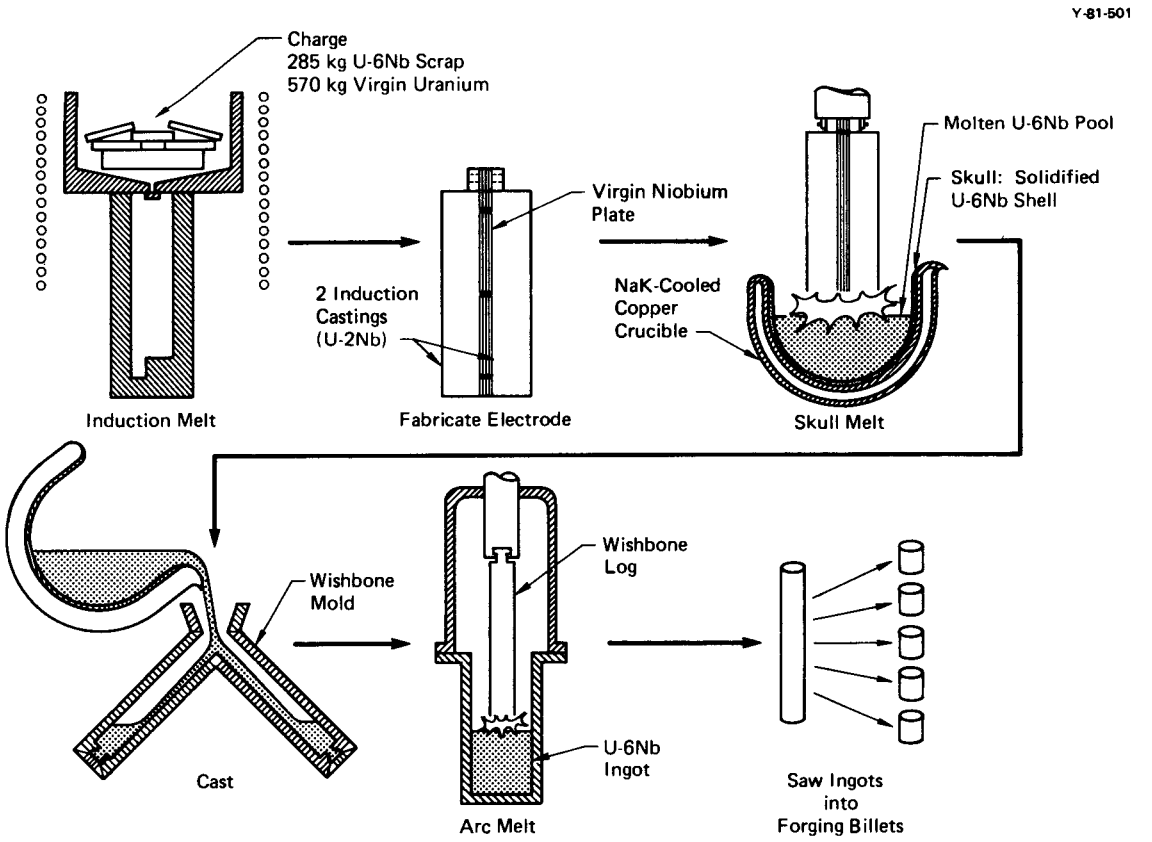

Figure 1. FLOW DIAGRAM FOR URANIUM-6 NIOBIUM ALLOY PROCESSING.

Forging billets were machined from the arc-melt ingot. These billets were "blocked" (upset forged) to 250-mm-diameter, 132-mm-long forgings that were processed as follows: (1) homogenized at 1000°C for 4 hours in a vacuum; (2) preheated to 900°C and back-extruded into a closed cylinder on a 7500-t vertical press; and (3) solution quenched in

water after heating for 1 hour at 800°C in a vacuum. Chemical analysis of the cylindrical extrusion is presented in Table 1. Tensile properties for both heat treatments are given in Table 2, and the microstructure near the open end of the extrusion is shown in Figure 2.

Impact Testing

Standard V-notched Charpy bars, as depicted in Figure 3, were machined from stock near the open-end of the back-extrusion such that all the bars were oriented in the same direction with the V-notch in the wall thickness direction. A Satec system impact tester with a capacity of 0-240 ft-lb in units of 1 ft-lb, was used to impact-test the bars with the pendulum set at the 240-ft-lb position prior to release. The impact tester was calibrated prior to specimen testing by placing the pendulum in the 240-ft-lb position and releasing it without a specimen on the anvil to determine if the pointer was swept to the 0-ft-lb position.

Table 1

CHEMICAL AND SPECTROGRAPHIC ANALYSIS OF URANIUM-6 WEIGHT PERCENT NIOBIUM ALLOY BACK-EXTRUSION

Element	Amount (ppm)	Element	Amount (ppm)
Nb (wt %)	5.65	Mg	< 2
C	90	Mn	3
Al	< 4	Mo	< 10
As	<20	Na	< 4
Au	< 2	Ni	20
B	< 0.2	P	< 200
Ba	< 4	Pb	< 4
Be	< 0.02	Pd	< 10
Bi	< 4	Si	15
Ca	< 2	Sn	< 10
Cd	< 0.4	Sr	< 20
Co	< 1	Ti	< 10
Cr	< 2	V	< 5
Cu	7	W	200
Fe	18	Y	< 20
K	< 20	Zn	< 40
Li	< 1	Zr	< 50

The Charpy bars were cooled to −30° and −60°C in an alcohol-dry ice bath, −89°C in a cold chamber, and to −198°C in liquid nitrogen. To heat the bars (+60° to +200°C), a high-flash-point quenching oil was used. The oil was heated in a stainless steel beaker on a hot plate. A Charpy bar was placed in the transfer tongs and both the bar and clamp part of the tongs were submerged in the cold or hot medium and held for 15 minutes after the medium had regained the desired (test) temperature. When the cold chamber was used at −89°C, the bar and tongs were retained in the cold chamber overnight prior to testing. Cooled or heated Charpy bars were rapidly transferred to the anvil of the impact tester, broken by the first swing of the pendulum from the 240-ft-lb position, and the dial energy reading on the scale recorded.

Table 2

ROOM TEMPERATURE TENSILE PROPERTIES OF SOLUTION-QUENCHED AND SOLUTION-QUENCHED AND AGED URANIUM-6 WEIGHT PERCENT NIOBIUM ALLOY BACK-EXTRUSION

Alloy Condition	Tensile Strength (MPa)	Yield Strength(1) (MPa)	Elongation in 25.4 mm (%)	Reduction in Area (%)
Solution-Quenched	843	132	30	38.8
Solution-Quenched and Aged(2)	863	421	30.2	45.6

(1) At 0.2% offset.
(2) Aged at 200°C for 2 hours.

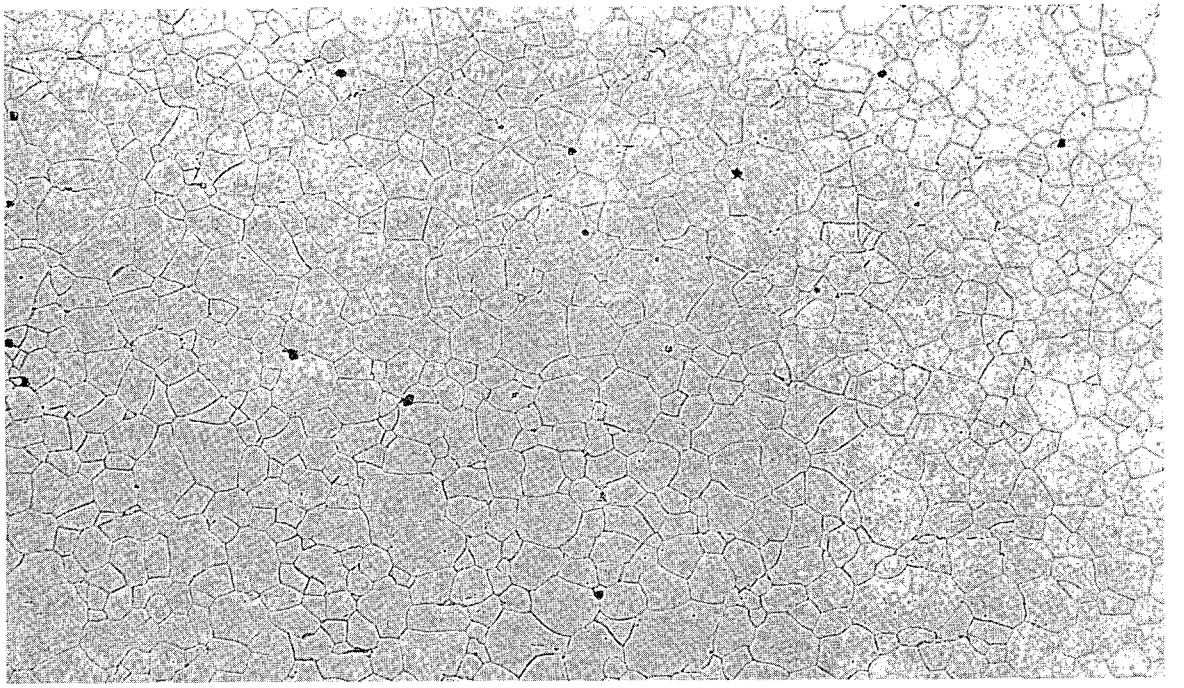

MS-80-0091-1

Figure 2. MICROSTRUCTURE OF A SOLUTION-QUENCHED URANIUM-6 WEIGHT PERCENT NIOBIUM ALLOY BACK-EXTRUSION. (Bright field illumination; 100X.)

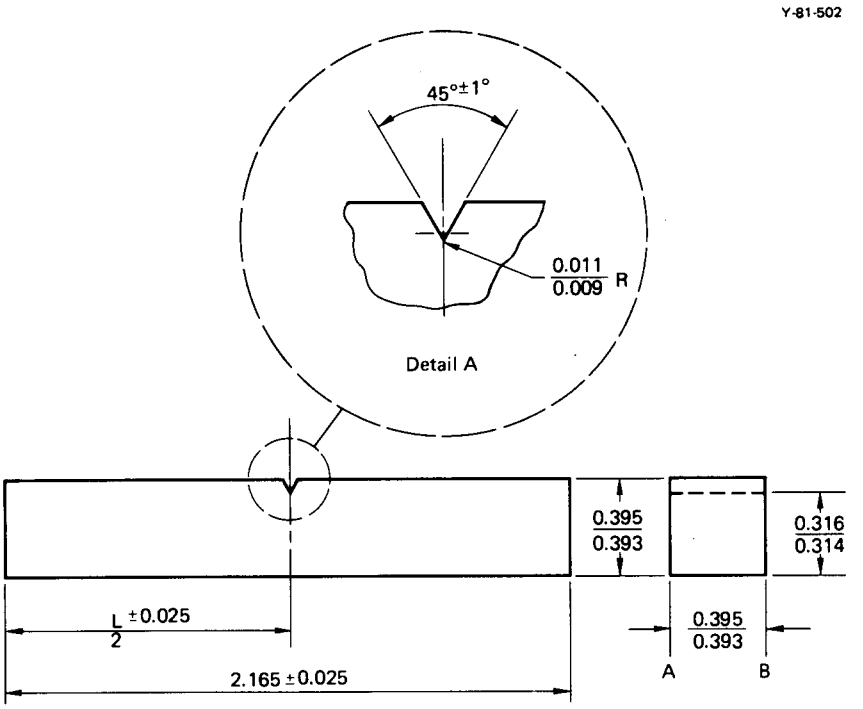

Figure 3. CHARPY BAR DESIGN.

RESULTS

Solution-Quenched Condition

Impact test results for the solution-quenched U-6Nb alloy are presented in Table 3 and plotted in Figure 4. Subsized Charpy bars were also tested, but the bar halves bent upon impact, and the dial energy values were erroneous. Consequently, these data are not presented.

A photograph of the fractured surfaces of the solution-quenched Charpy bars is shown in Figure 5. The results of a scanning-electron-microscopy examination of the fractured surfaces are shown in Figure 6.

Table 3

CHARPY IMPACT DATA FOR SOLUTION-QUENCHED URANIUM-6 WEIGHT PERCENT NIOBIUM ALLOY

Test Temperature (°C)	Dial Energy (ft-lb)
Liquid Nitrogen	13.5
Liquid Nitrogen	13.5
−88	35.0
−89	29.5
−60	34.0
−60	33.5
−30	38.0
−30	40.5
Room Temperature	47.5
Room Temperature	45.0
+60	51.5
60	55.5
+100	59.5
100	61.0
+150	62.5
150	63.0
+200	58.0
200	61.5

Solution-Quenched and Aged Condition

Charpy bars cut from the solution-quenched back extrusion were aged at 200°C for 2 hours in vacuum. Microstructure of the bars after aging is shown in Figure 7. The same impact tester and test conditions as previously described were used to test the aged Charpy bars, except that the temperature range was −80° to +100°C. Results of the impact tests are in Table 4 and are plotted in Figure 4.

Figure 8 is a photograph of the fractured surfaces of the Charpy bars tested between −80° and +100°C. Scanning Electron micrographs were also taken of the fractures (as shown in Figure 9).

Table 4

CHARPY IMPACT DATA FOR SOLUTION-QUENCHED AND AGED URANIUM-6 WEIGHT PERCENT NIOBIUM ALLOY

Test Temperature (°C)	Dial Energy (ft-lb)
+100	28.5
+100	29.0
Room Temperature	25.0
Room Temperature	24.5
−30	22.0
−30	22.5
−80	18.5
−80	19.0

Discussion of Results

The tensile properties in Table 2 and the microstructure in Figure 2 are typical for the U-6Nb alloy in the solution-quenched condition. As the impact testing temperature increased (Figure 4), the impact strength (dial energy) increased, as expected. A linear relationship existed between testing temperature and impact strength for solution-quenched bars up to +100°C, and then the

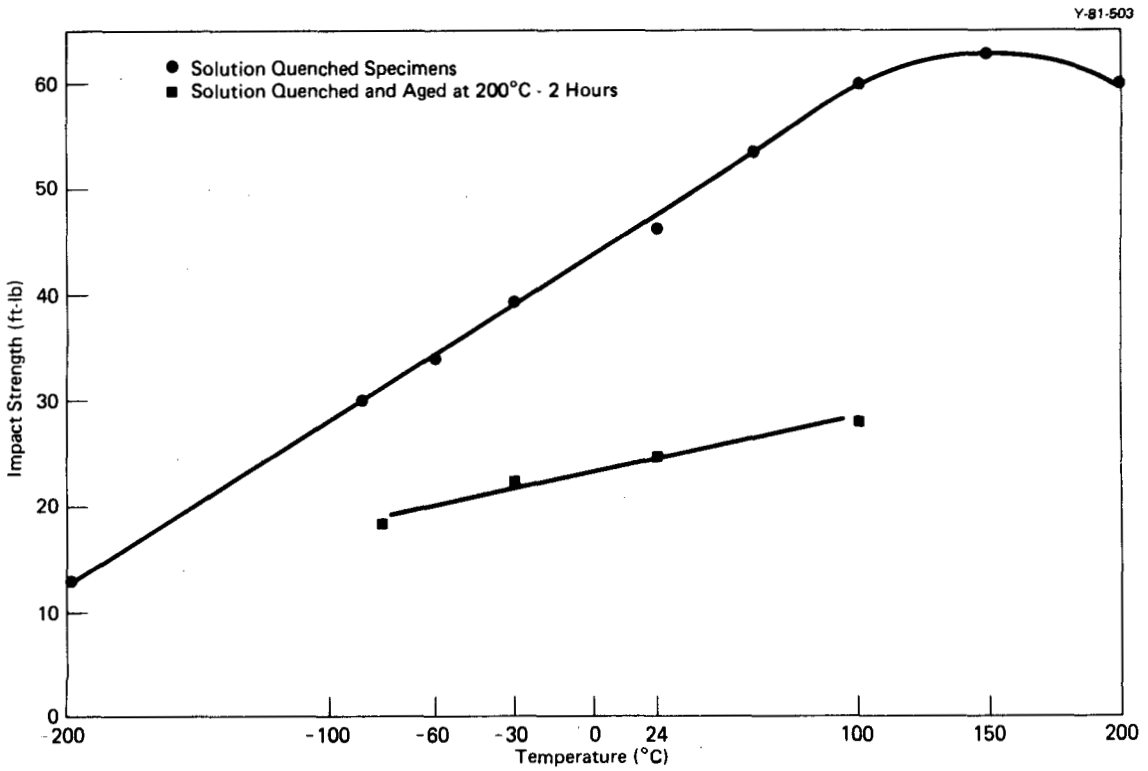

Figure 4. DUCTILE-BRITTLE TRANSITION CURVE FOR URANIUM-6 WEIGHT PERCENT NIOBIUM ALLOY.

impact strength plateaued. This plateau may be due to aging of the alloy during the test or to transformation of the α'' martensitic structure to the γ_0 martensitic structure.

Figure 5 shows the presence of shear lips on the sides of the fractured Charpy bars that had been solution quenched. Bars tested at −198°C had a very fine textured fracture with a small shear lip; the texture became coarser, with a larger shear lip, as the testing temperature was increased to +200°C. The scanning electron micrographs in Figure 6 show that the fractures were of the ductile-dimple mode, with the dimples becoming progressively smaller as the testing temperature was decreased.

Aging the solution-quenched U-6Nb alloy at 200°C for 2 hours did not significantly change the microstructure, as seen by comparing Figures 2 and 7. The impact strength of aged bars decreased as the test temperature decreased, as for solution-quenched bars, but the impact strength was lower, as seen in Table 4 and Figure 5. A linear relationship also existed for the data from aged bars, but the slope of the straight line was considerably less than for the solution-quenched specimens, indicating that the aged specimens were less sensitive to change in testing temperature.

The fractured surfaces of the aged bars, Figure 8, did not exhibit the extensive shear lips found on solution-quenched bars; and the bars tested at −80°C appeared to have a finer textured fracture than the ones at +100°C.

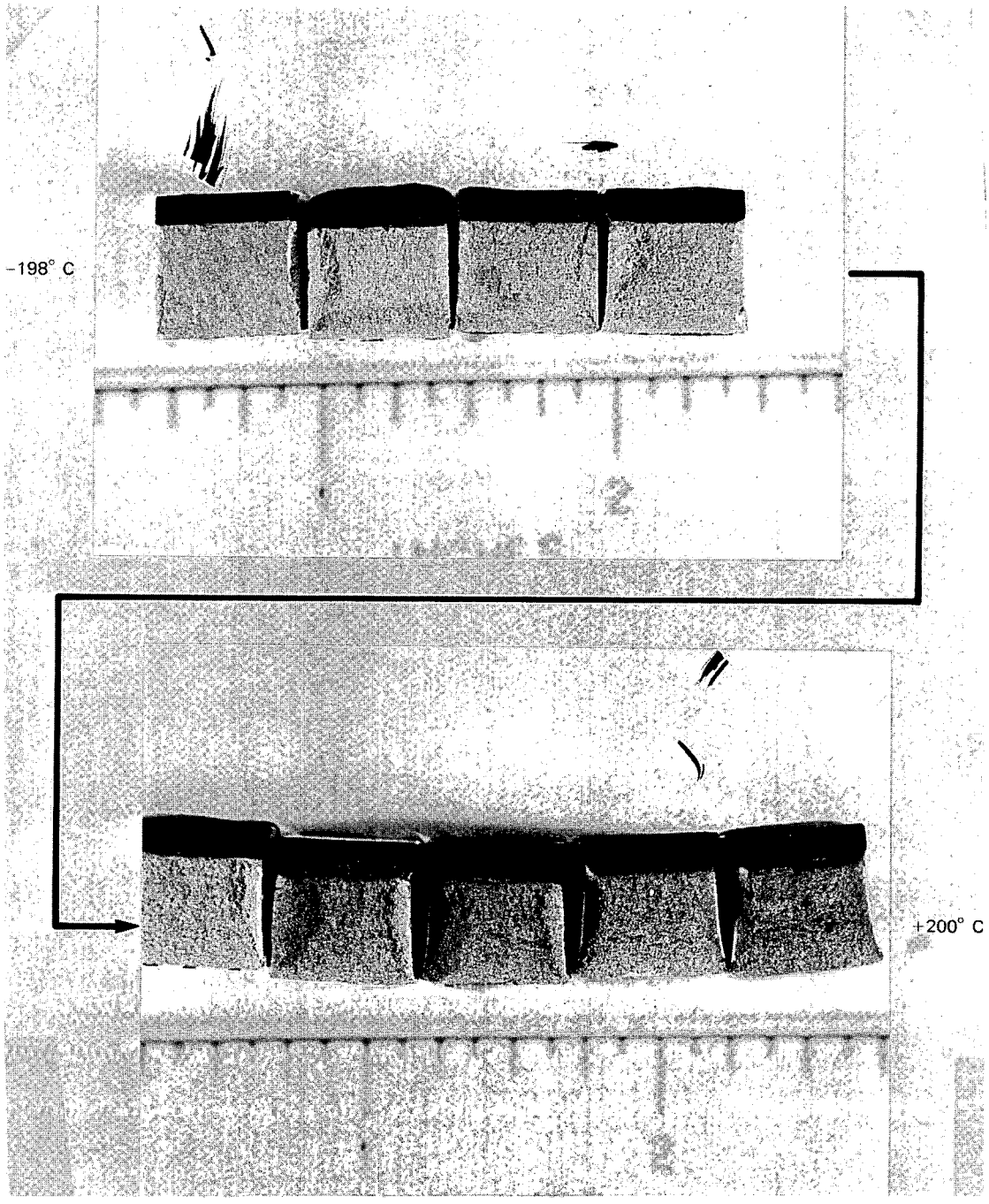

Figure 5. FRACTURED SURFACES OF SOLUTION-QUENCHED URANIUM-6 WEIGHT PERCENT NIOBIUM ALLOY.

Aging the solution-quenched bars at 200°C for 2 hours should retain the martensitic, regularly spaced, internally twinned, lathes of α'' phase;[2] but a precipitation reaction appeared to have taken place in the bottom of the ductile-dimples in Figure 9, as indicated by the blocky fractured structure.

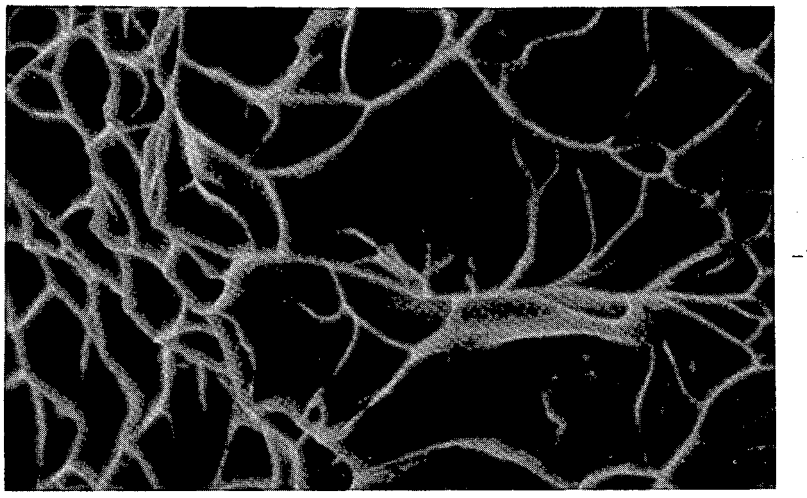

−198° C

3000X 193578

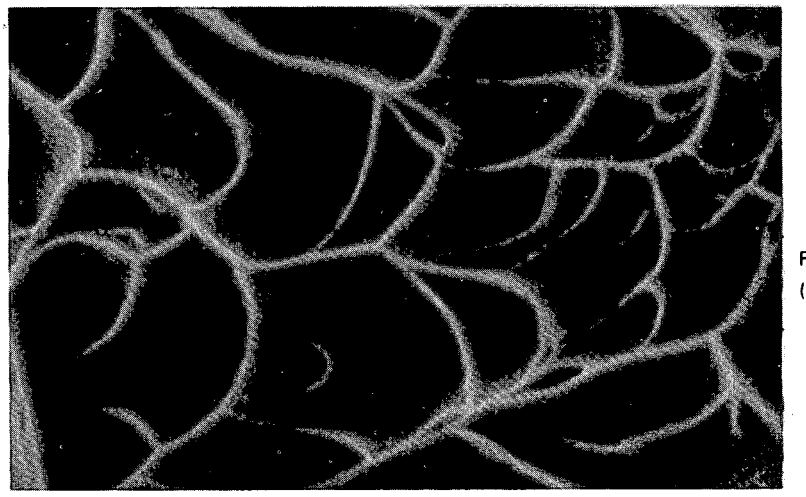

Room Temperature
(+24° C)

3000X 193581

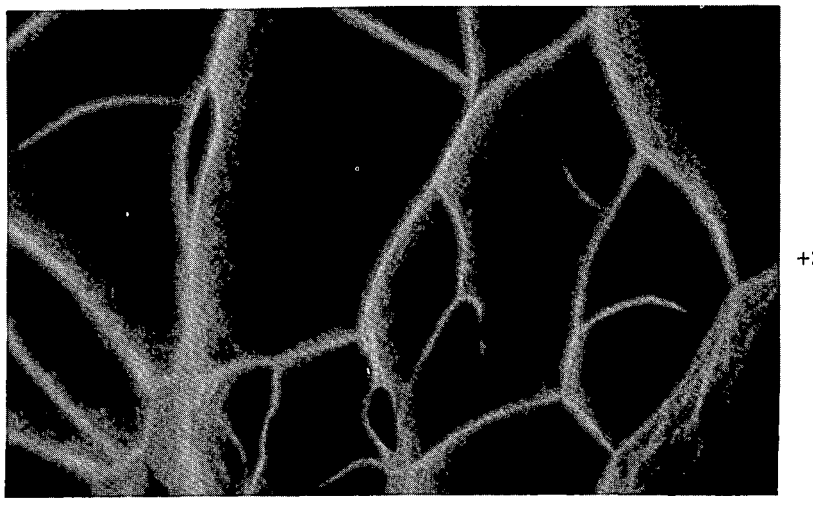

+200° C

3000X 193577

Figure 6. SCANNING ELECTRON MICROGRAPHS OF FRACTURED SURFACES OF SOLUTION-QUENCHED URANIUM-6 WEIGHT PERCENT NIOBIUM ALLOY.

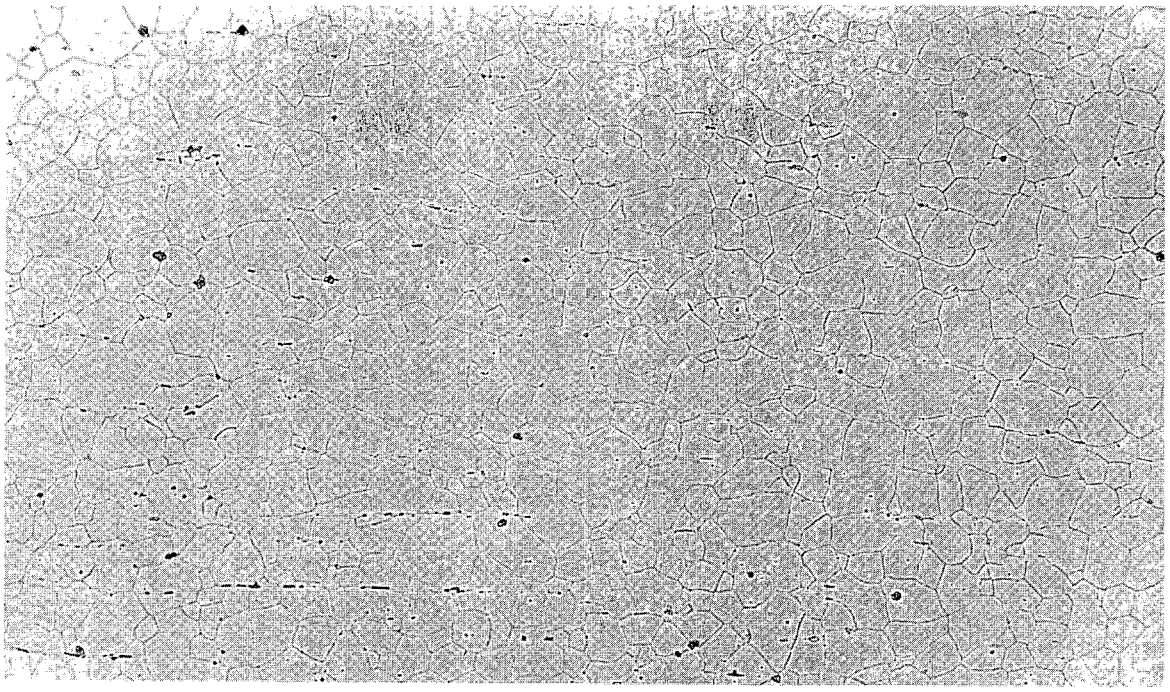

MS-80-0222-1

Figure 7. MICROSTRUCTURE OF A SOLUTION-QUENCHED AND AGED URANIUM-6 WEIGHT PERCENT NIOBIUM ALLOY CHARPY BAR. (Bright field illumination; 100X.)

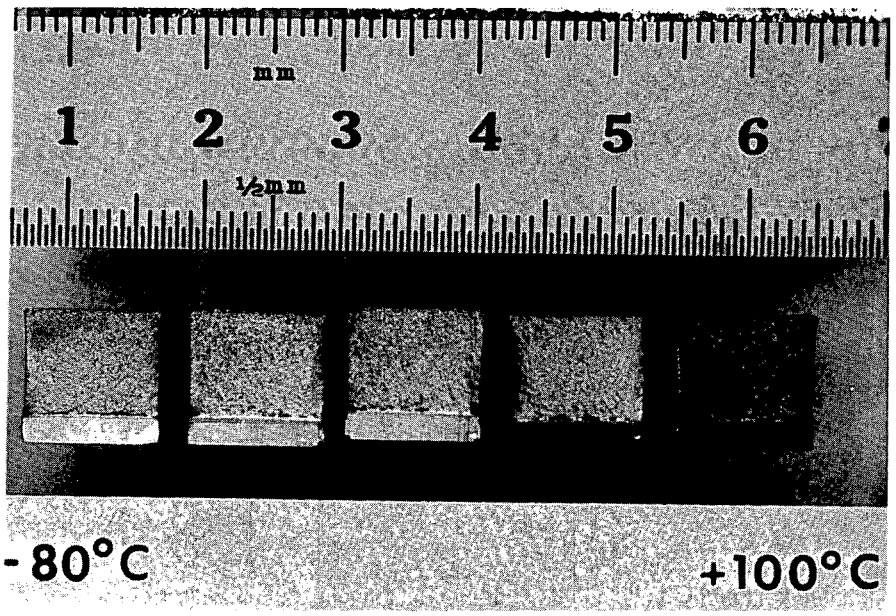

Figure 8. FRACTURED SURFACES OF SOLUTION-QUENCHED AND AGED URANIUM-6 WEIGHT PERCENT NIOBIUM ALLOY CHARPY BARS.

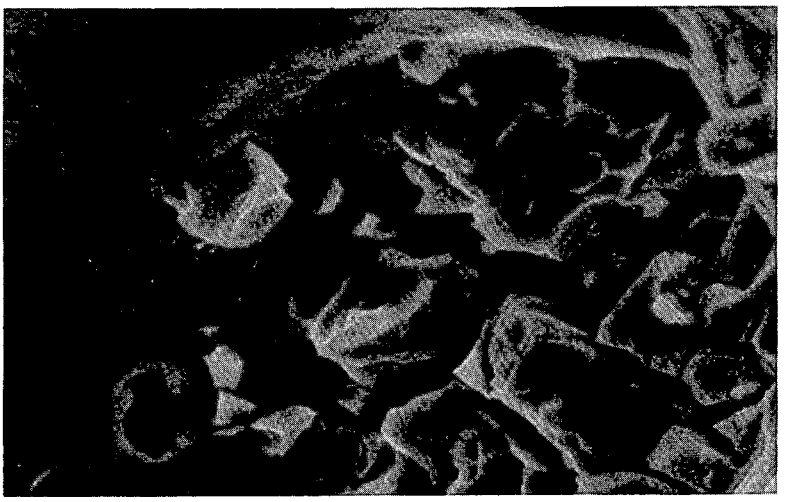

-80° C

3000X 193582

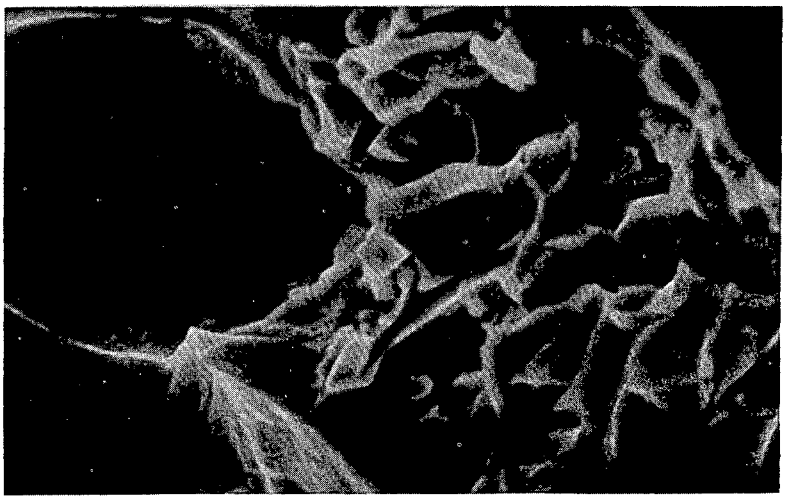

Room Temperature
(+24° C)

3000X 193580

+100° C

3000X 193579

Figure 9. SCANNING ELECTRON MICROGRAPHS OF FRACTURED SURFACES OF SOLUTION-QUENCHED AND AGED URANIUM-6 WEIGHT PERCENT NIOBIUM ALLOY.

CONCLUSIONS

A sharp ductile-brittle transition did not exist for either solution-quenched or solution-quenched and aged U-6Nb alloy over the temperature range investigated. Heating the solution-quenched alloy above 100°C caused the impact strength to plateau, probably because the test sample aged or transformed martensitically during testing. A linear relationship existed between test temperature and impact strength of both solution-quenched and subsequently aged alloy. The impact strength of solution-quenched and aged U-6Nb alloy was lower over the range of temperature tested compared to the alloy in the solution-quenched condition. The U-6Nb alloy retained a significant amount of impact strength even at very low temperatures.

REFERENCES

1. J. L. Cadden, N. C. Jessen, Jr., and P. S. Lewis, Jr., ***Melting of Uranium Alloys***, Union Carbide Corporation, Nuclear Division, Oak Ridge Y-12 Plant, Oak Ridge, Tenn., Y-DA-5323 (1973).

2. A. M. Ammons and D. H. Johnson, Union Carbide Corporation, Nuclear Division, Oak Ridge Y-12 Plant, Oak Ridge, Tenn., unpublished (1975).

ACKNOWLEDGMENTS

The author wishes to thank C. E. Foster of the Y-12 Mechanical Properties Laboratory, Product Certification Division, for running the impact tests and R. K. Bennett, Jr., of the Instrumentation and Characterization Department, Y-12 Development Division, for scanning-electron-microscopy examination of the fractured impact specimens.

Distribution

Department of Energy - Oak Ridge

Hickman, H.D.
Poteat, R. M.

Lawrence Livermore National Laboratory

Bish, W. R.
Selway, D. L.
Simecka, W. B.
Wood, D. H.

Los Alamos National Laboratory

Hoyt, H. C.
Straw, J. B.

Oak Ridge Gaseous Diffusion Plant

Armstrong, R. C.
Wilcox, W. J., Jr.

Oak Ridge National Laboratory

Hopkins, C. C.

Oak Ridge Y-12 Plant

Anderson, R. C. (15)
Bennett, R. K., Jr.
Bieber, C. R.
Bryant, D. P.
Burditt, R. B.
Chapman, L. R.
Chilcoat, T. R.
Dodson, W. H./Googin, J. M.
Ferguson, J. E.
Hunter, A. H., Jr.
Jessen, N. C.
Keith, A.
Kite, H. T.
Koger, J. W.
Kollie, T. G.
Lewis, P. S., Jr.
Lockett, S. W.
Ludwig, R. L.
McElroy, B. D.
McGinnis, R. S.
Mills, J. M., Jr.
Morrow, M. K.
Northcutt, W. G.
Oakes, R. E., Jr.
Robinette, B. K.
Schede, R. W.
Serandos, T. R.
Smith, J. G.
Vandermeer, R. A.
Y-12 Central Files (master copy)
Y-12 Central Files (route copy)
Y-12 Central Files (Y-12RC)
Y-12 Central Files (5)

Paducah Gaseous Diffusion Plant

Walter, C. W.

Rockwell International - Rocky Flats

Jackson, R. J.
Mataya, M. C.

Sandia National Laboratories - Albuquerque

Spencer, W. J.

Union Carbide Corporation - New York

Tinsley, S. W.

In addition, this report is distributed in accordance with the Category UC-25, **Materials**, as given in the ***Standard Distribution for Unclassified Scientific and Technical Reports***, DOE/TIC-4500.