CONF-890703--13

"The submitted manuscript has been authored by a contractor of the U.S. Government under contract No. DE-AC05-84OR21400. Accordingly, the U.S. Government retains a nonexclusive, royalty-free license to publish or reproduce the published form of this contribution, or allow others to do so, for U.S. Government purposes."

Beam dynamics of a liquid metal ion source*

J. H. Whealton, P. S. Meszaros, K. E. Rothe, R. J. Raridon, P. M. Ryan

Oak Ridge National Laboratory, Oak Ridge, TN 37831

CONF-890703--13

DE89 015856

Abstract

RMS emittance growth of liquid metal ion sources is studied. Processes included are nonlinear expansion through extractor and accelerator fringe fields, nonlinear beam space charge, plasma effects near needle, and waves (either ion-acoustic or space charge limited as considered by V. I. Dudnikov). This investigation consists of 2-D analysis of appropriate Vlasov-Poisson equations in both steady-state and time-dependent formulations. Various geometries will be considered such as some used by G. Alton of ORNL.

DISCLAIMER

This report was prepared as an account of work sponsored by an agency of the United States Government. Neither the United States Government nor any agency thereof, nor any of their employees, makes any warranty, express or implied, or assumes any legal liability or responsibility for the accuracy, completeness, or usefulness of any information, apparatus, product, or process disclosed, or represents that its use would not infringe privately owned rights. Reference herein to any specific commercial product, process, or service by trade name, trademark, manufacturer, or otherwise does not necessarily constitute or imply its endorsement, recommendation, or favoring by the United States Government or any agency thereof. The views and opinions of authors expressed herein do not necessarily state or reflect those of the United States Government or any agency thereof.

*Research sponsored by the Exploratory Studies Program of the Oak Ridge National Laboratory, operated for the U.S. Department of Energy by Martin Marietta Energy Systems Inc., under contract DE-AC05-84OR21400.

MASTER

DISTRIBUTION OF THIS DOCUMENT IS UNLIMITED

High brightness ion sources are desirable for many research, industrial, and military applications including solid state physics, lithography, diagnostic beams, and integrated circuits. High brightness beams are characterized by high current density and low emittance, where the emittance is proportional in each transverse dimension to the average transverse particle velocities and proportional to the beam size. The transverse emittance determines the uncorrectable spread of a beam as it propagates.

The liquid metal or electrohydrodynamical ion source (LMIS) has the potential to be the brightest ion source ever developed by virtue of its possible high current density and small emission area; it is composed of a thin needle which is coated with a liquid metal. An electrostatic potential is applied between the needle and an extraction electrode. The electric forces cause the liquid surface to assume a sharply-pointed geometry from which ions are emitted. The physics of the ion emission mechanism of a LMIS is not well understood at this time; it is known that the needle-point emission site is very small, with estimates of tip radius from 10 to 1000 A (1 A = 10^{-10}m). The field enhancement from such small radius tips is enormous, resulting in surface electric fields in the 10^7 V/m range. The currents, which can be 10 to 100 μA, yield correspondingly large current densities. The effective source temperature is unknown, although conjectures have placed it as low as 1 eV. The uncertainties in the source temperatures and emission areas of the LMIS yield large uncertainties in the best achievable RMS emittance and beam brightness, but the potential for orders of magnitude improvement over other ion sources makes this an attractive candidate for a number of applications.

According to Liouville's Theorem, the RMS emittance of the ion beam, or its phase-space occupation, is a conserved quantity provided the beam is subjected to linear forces; nonlinear forces can increase RMS emittance. Experiments to measure the RMS emittance of LMIS beams, after extraction, acceleration,

expansion, and focusing by electrostatic/magnetostatic optical elements, heretofore have not shown the expected low values predicted by theory.

We have done computer simulation of liquid metal ion sources by solution to 2-D full nonlinear coupled Vlasov-Poisson equations. The geometry considered is one by Gerald Alton[1] at ORNL. We find that even if there was a zero intrinsic source emittance, the RMS transverse emittance growth of the beam, due to nonlinear aberrations caused by the imperfect optical systems and extraction systems, would be about what was measured experimentally. That is, the potentially small source emittance that one is interested in measuring can be completely masked by the beam extraction and optical system.

However, the LMIS may have the necessary properties we are looking for, thus the subject of our investigation. Two common extractor geometries have been examined, and Fig. 1 shows the calculated emittance growth as a function of distance from the needle. It is seen in both of these configurations that the RMS emittance growth during acceleration is significant. Therefore, even if the LMIS were ideal, these accelerators are not. It can also be seen that a LMIS with suitable emission properties improves things.

It is clear that the optical aberrations of present accelerator/telescope systems must be reduced if the promise of the LMIS is to be realized, or if its intrinsic properties are even to be measured. We propose to design a LMIS extractor configuration which minimizes the aberrations of the beam and is tailored to the particular current that the ion source is emitting. We can combine this with an optical system that telescopes the beam into the other optical transport elements, also depending on the application.

We consider a two-dimensional treatment of the LMIS extraction and acceleration with an accurate, nonlinear Vlasov-Poisson analysis, which includes nonlinear field effects, space charge effects, and image charges. In addition, we

have constructed plasma models of the emission site to investigate the effects of such a plasma on LMIS performance; the presence and absence of a plasma in the high space charge, high field emission volume is expected to have profound influence on the tip geometry and beam properties.

We have adopted the Allison definition of normalized RMS emittance used by LANL.[2]

$$\varepsilon_{RMS,n} = \beta\gamma \left[(\overline{x^2}\,\overline{x'^2}) - (\overline{xx'})^2 \right]^{1/2}$$

Figure 1 graphically illustrates a relevant parameter space. Some examples of hypothetical emitters are shown to the right; these points can be brought horizontally by the action of a perfectly linear telescope; i.e., one that conserves emittance as it expands the beam, shown in Fig. 1.

Now, we must determine where our present state-of-the-art sources lie. This needs to be done by combining both experiments and computational analysis. Since all experimental measurements of RMS emittance have been made after acceleration through the extractor/accelerator/telescope, the contribution of this component to the intrinsic needle emittance must be assessed.

The total emittance of the final beam is determined by the initial emittance of the ion source and the emittance growth introduced by the nonlinear electric fields of the accelerator/telescope system. The systems under study appear to be dominated by the optical aberrations of the accelerator, to the extent that the fundamental source emittance is nearly masked.

Figures 2, (a)-(e), show some of the series of incremental enlargements of a prototype conical accelerator geometry, with each enlargement decreasing the scale length by approximately an order of magnitude. The ions are assumed isotropically emitted over a polar angle of 30° and 90°. It can be seen that emittance growth is present throughout the exxpansion process. The 90° curve assumes that

ions are emitted over the entire hemispherical needle point surface, while the 30° curve assumes ions are emitted only from the central region. Although the beam current is reduced by a factor of 9 in the 30° case, the beam emittance is reduced by about two orders of magnitude. This is a consequence of avoiding the more nonlinear electric fields far from the central axis that are responsible for aberrations. At the largest scale, vignetting occurs for this prototype geometry, causing the emittance to be identical for both cases. The accelerator geometry must therefore be identified as the principal obstacle to the success of the system. Fortunately, it is the component most susceptible to improvement.

Figure 3 models the planar geometry of Alton.[1] The emittance of this planar structure shows significant improvement over the prototypical conical geometry, but by less than an order of magnitude. The emittance contribution of the accelerators is still more than two orders of magnitude higher than projected initial conditions.

Also show in Fig. 1 are the regimes of emittance measurements performed by Alton[1] on the conical (A1) and planar (A2) extractor geometries. These emittances are about two orders of magnitude higher than calculated; however, these measurements were made after passing the beam through focusing lenses and a momentum analysis magnet, which could introduce RMS emittance growth to the beamlet.

Figures 4, (a)-(d), vary the needle position in a planar (A2) geometry. In this case, the extractor electrode is maintained at the needle potential. It can be seen that the beam radius decreases as the needle is retracted toward the control electrode, indicating an increase in angular intensity.

The emission properties of the needle tip, such as ion temperature, source size, surface, field strength, and space-charge limits, remain speculative. The measurements performed to date are limited by the total system optics and are not

indicative of the intrinsic source properties. At the present time, there is no indication that these intrinsic source properties are not adequate to meet the system requirements.

In light of the uncertainties surrounding the size, shape, and emission properties of the needle source, our computations provide qualitative insight into physics issues based on our assumptions about the emitter. One issue is the influence of space charge on optics. Another is the question of whether or not a plasma exists at the emission site which could provide space-charge neutralizing electrons to the region. Figures 5 (a)-(c) show the results of varying the current density near a sphere resting on a 49.3° Taylor cone with an equilibrium plasma present; Figs. 5 (d)-(f) has no plasma present.

We propose to design an optimized LMIS. Figure 6 (a) is an example of an optimization procedure, which we are developing, whereby we set the end point an emittanceless beam, and we vary parameters to achieve the lowest emittance at the needle. This inverse procedure is very sensitive to many of the scale changes and is being used to optimize the configuration. Figure 6 (b) shows the emittance diagram at the needle for such an optimization in an intermediate step. The multiple scale meshes are being utilized for the minimization of the emittance of the LMIS.

In all of the foregoing cases, we have chosen an ideal model of the needle, where the ions extracted have essentially zero ion temperatures and emanate straight out from the needle. We also include the ambient electrostatic and space-charge fields. We have considered other plasma models, which may likewise shed some light on the extraction process. In Fig. 7 is an example of a plasma model, which self-consistently finds the shape of the needle, the space charge fields of the emanating ions, and the electrostatic fields. Use of plasma models, as shown, may elucidate mechanisms for generations. In this model, the plasma is assumed to have

an equilibrium distribution of negative charges, as well as the positive ions which are assumed to have uniform flux in the transverse dimension.

References

1. G. Alton, private communication (1987).

2. P. Allison, unpublished (1984); Memo AT2: 84-98.

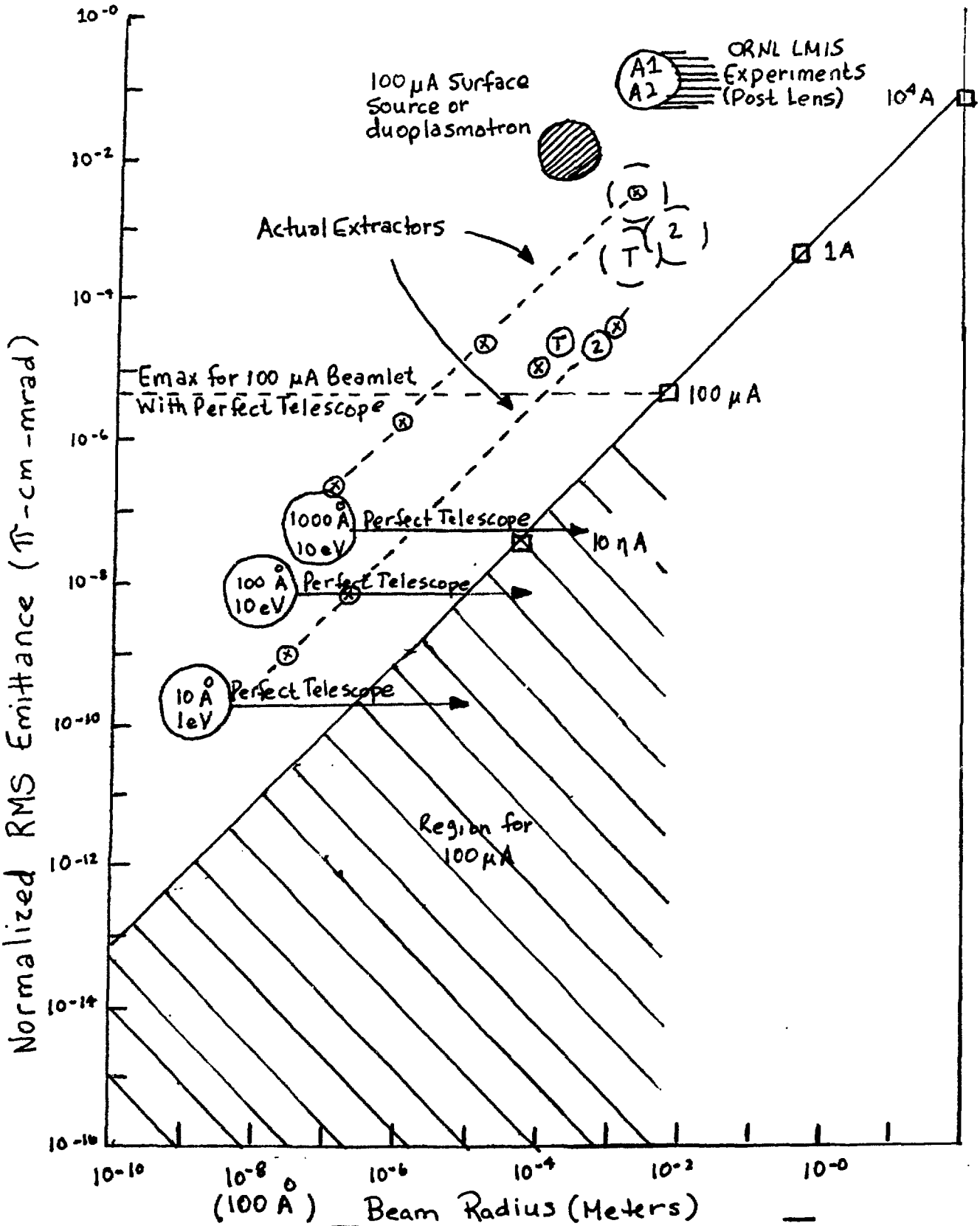

Potential for LMIS

FIGURE 1

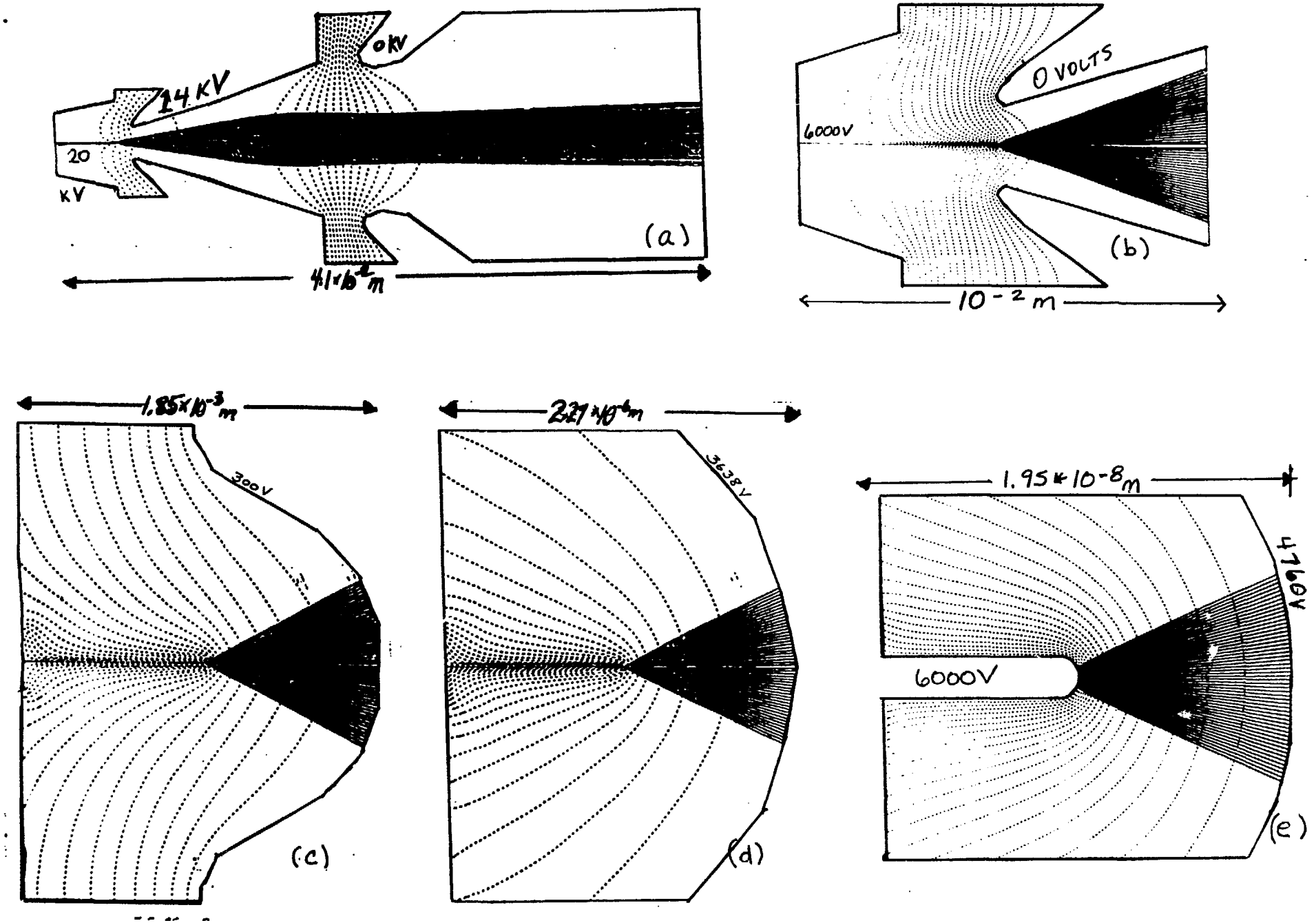

Incremental enlargements of conical accelerator.

FIGURE 2

ORNL-DWG 87-15036

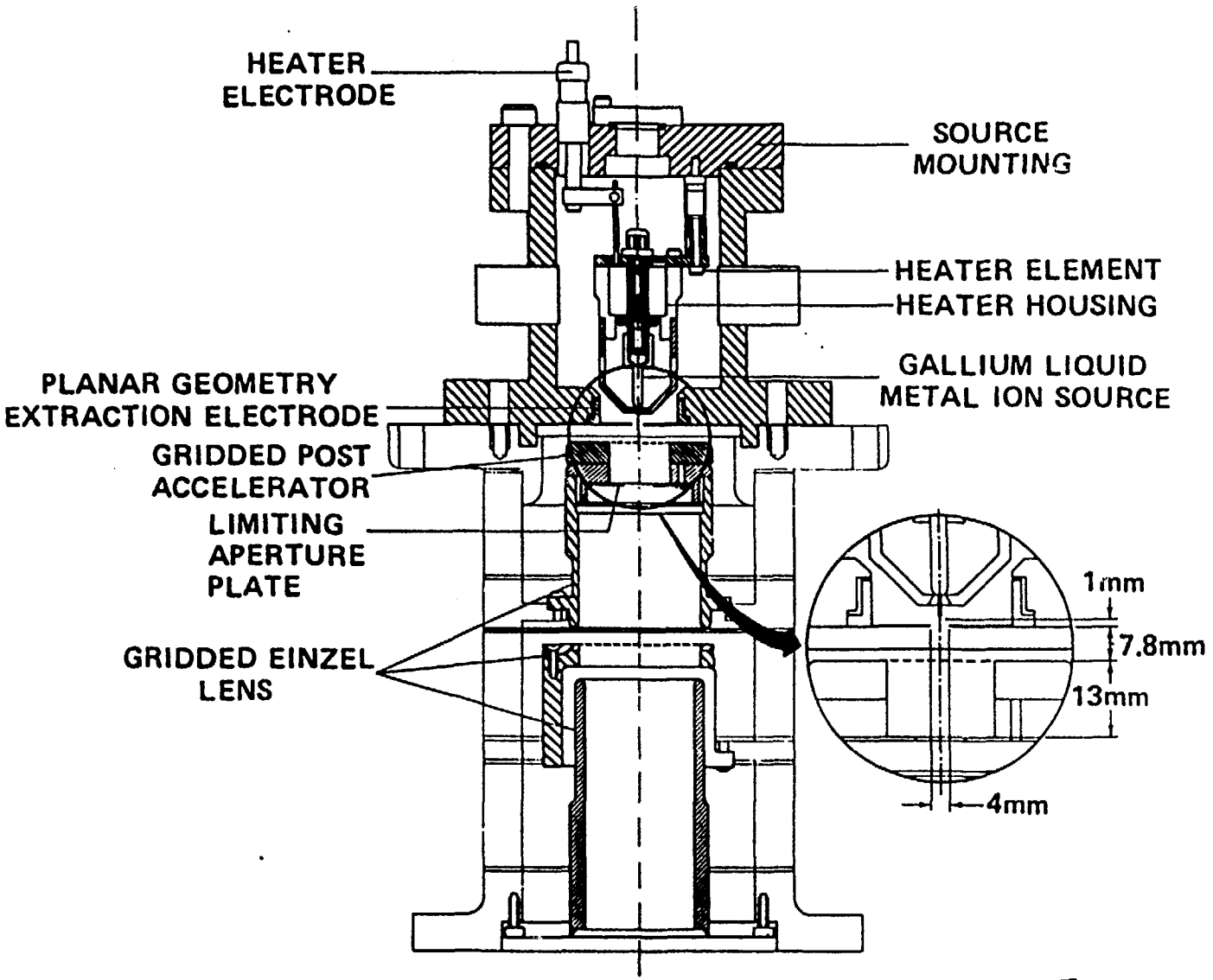

ALTON Planar Geometry

Figure 3

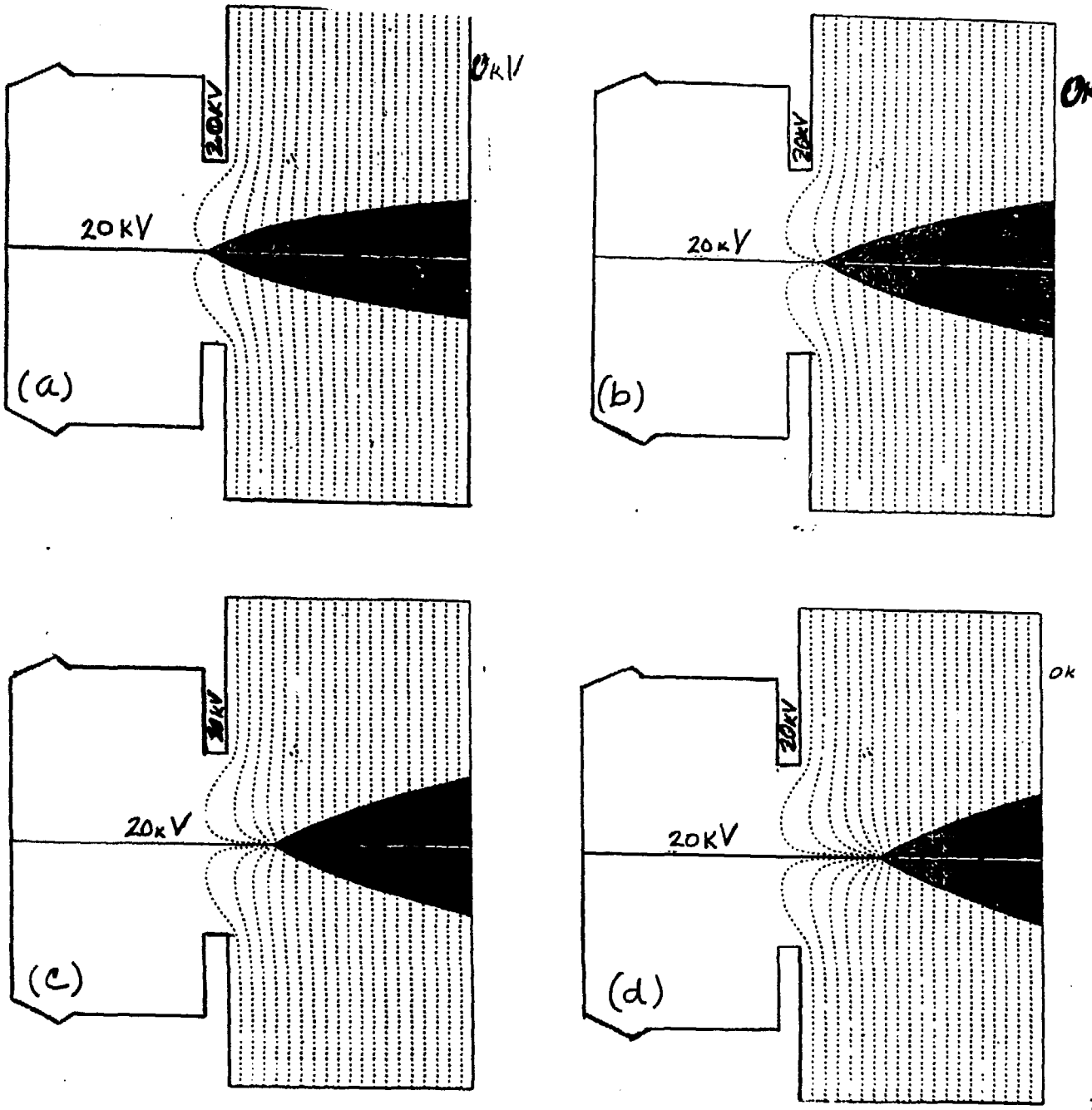

FIGURE 4

Varying needle position in a planar geometry

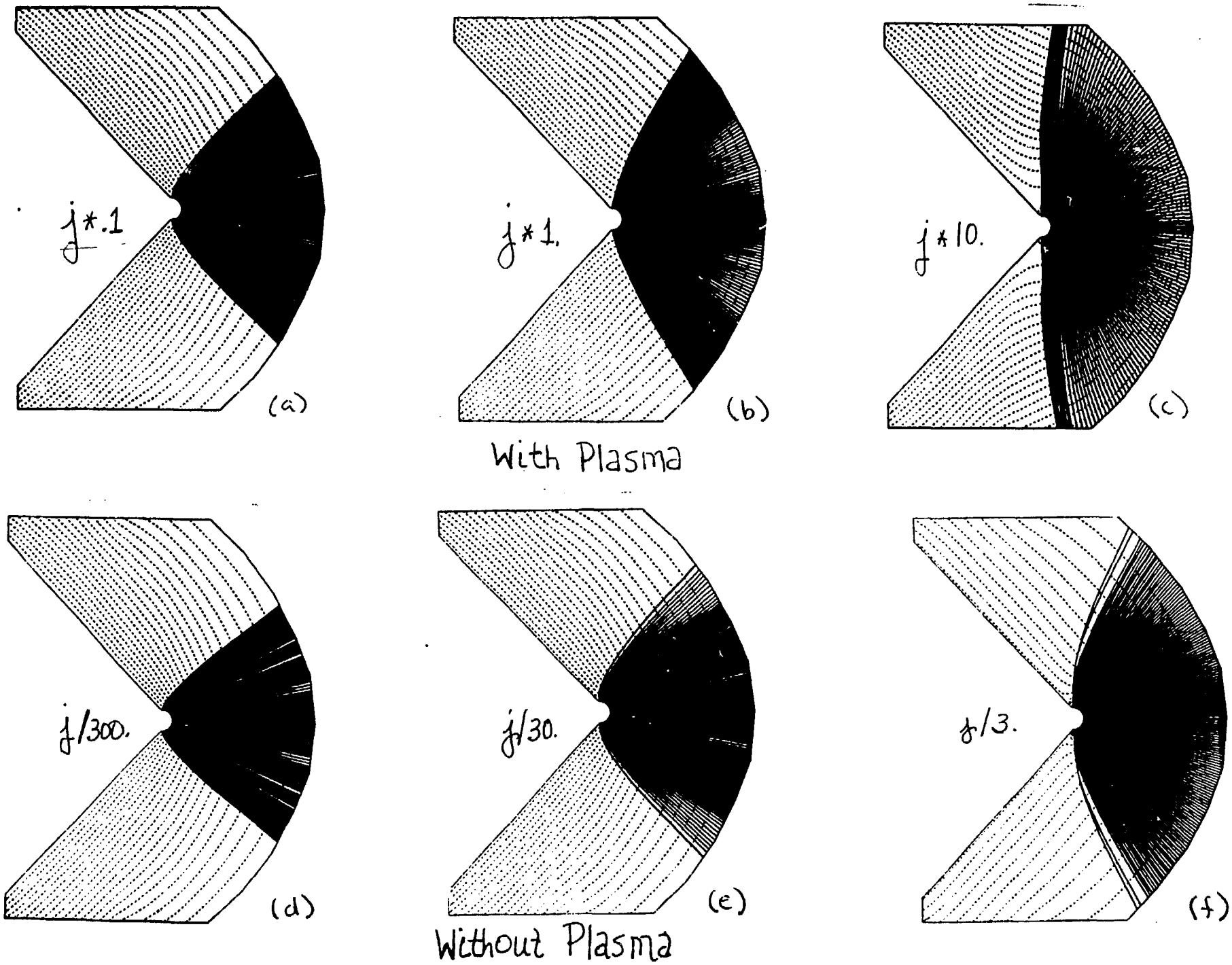

Figure 5 Current density variations: Taylor cone.

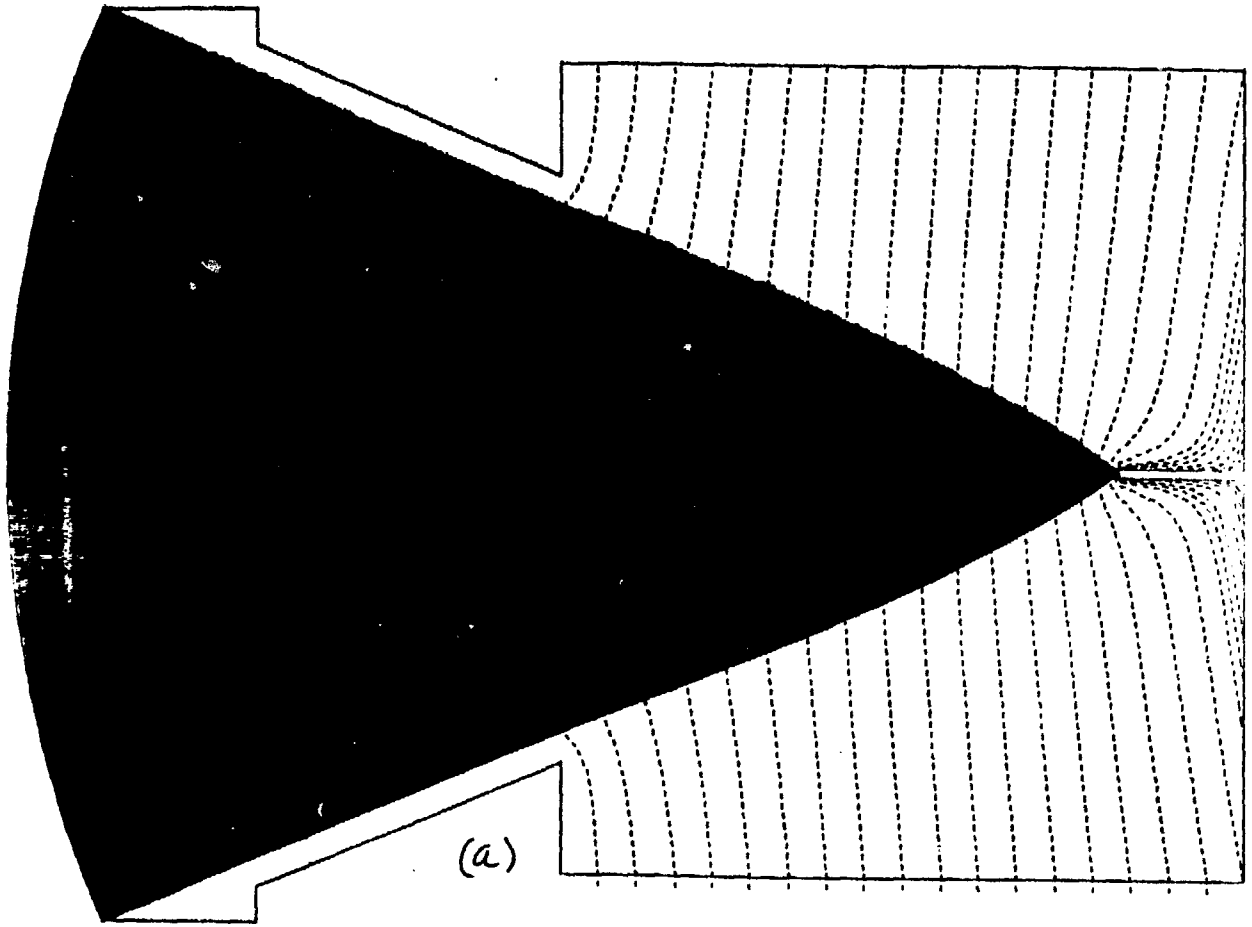

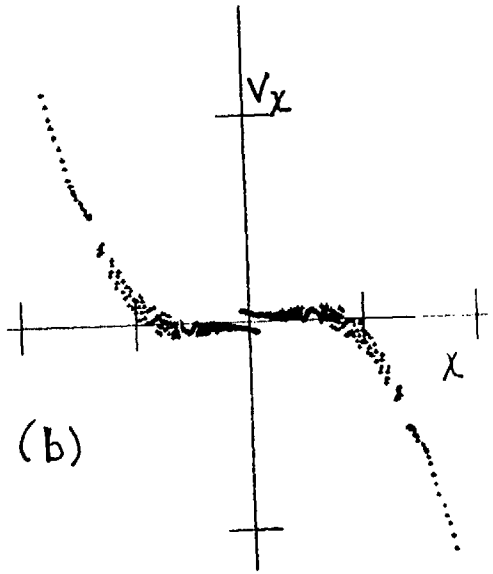

OPTIMIZED EMITTANCE

FIGURE 6

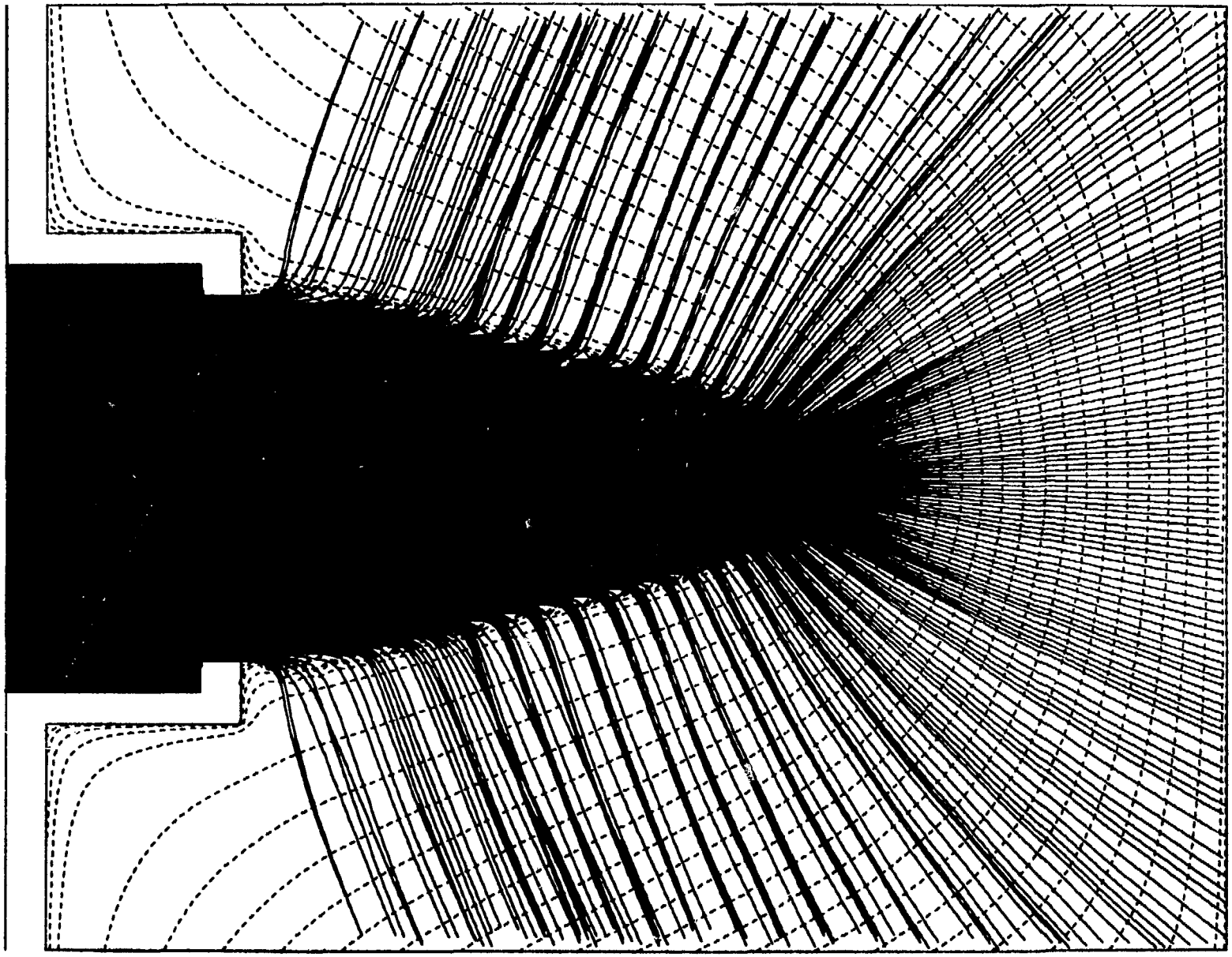

PLASMA MODEL

Figure 7