CONF-830406--63

Draft

DESIGN OF THE ADVANCED TOROIDAL FACILITY (ATF-1)*

R. L. Johnson, UCC-ND
Bldg. 9204-1 MS-15
P. O. Box Y
Oak Ridge, TN 37830
(615)574-1517

O. B. Adams, UCC-ND
Bldg. 9105
P. O. Box Y
Oak Ridge, TN 37830
(615)574-3898

T. C. Jernigan, ORNL
Bldg. 9201-2 MS-4
P. O. Box Y
Oak Ridge, TN 37830
(615)574-1166

B. E. Nelson, UCC-ND
Bldg. 9204-1 MS-13
P. O. Box Y
Oak Ridge, TN 37830
(615)574-1507

J. F. Lyon, ORNL
Bldg. 9201-2 MS-3
P. O. Box Y
Oak Ridge, TN 37830
(615)574-1179

P. B. Thompson, UCC-ND
Bldg. 9105
P. O. Box Y
Oak Ridge, TN 37830
(615)574-3898

MASTER

CONF-830406--63

DE83 012641

ABSTRACT

The Advanced Toroidal Facility-1 (ATF-1) is a torsatron being designed at ORNL as a replacement for the ISX-B tokamak. The concept for the device includes two continuous helical field coils which are segmented by way of demountable joints, two pair of vertical field coils and a set of twelve toroidal field coils. The vacuum vessel is placed inside the helical field coils and an external toroidal shell support structure is provided to react all coil and vacuum vessel loads. The present design status for all systems is discussed.

Device Description

An overall view of ATF-1 indicating the relationship of all component systems is shown in Figure 1. The design parameters for the device are given in Table 1. All coils are resistive, water cooled copper and are designed to the operating parameters shown in Table 2. Initial operation will be at fields and pulse lengths less than design maximums due to facility power supply limitations.

The device design allows for parallel fabrication and installation of major coil components and the toroidal vacuum vessel. Control of interfaces and verification of critical component design features and processes are coupled to the use of R&D facilities.

ATF-1 will be located in the ISX-B enclosure and will interface with the present ISX-B power supply buswork and utility systems. Figure 2 shows ATF-1 in the ISX-B area, including the major ISX-B diagnostics and plasma heating systems.

*Research Sponsored by Fusion Energy Office, U. S. Department of Energy under contract W-7405-eng-26 with the Union Carbide Corporation.

By acceptance of this article, the publisher or recipient acknowledges the U.S. Government's right to retain a nonexclusive, royalty-free license in and to any copyright covering the article.

DISTRIBUTION OF THIS DOCUMENT IS UNLIMITED

Table 1

Major Radius, R_o	2.10 M
Coil Minor Radius, a_c	0.4575 M
No. of HF Coils	2
No. of Field Periods	12
Toroidal Field on Axis, B_o	2.0 T
T_{on} at 2.0 T	10 Sec
T_{on} at 1.0 T	Steady State

Table 2

			Outer VF		
Parameters	HF	Main	Trimming	Inner VF	TF
Current per coil, MAT	1.75	0.656	</-0.263	0.263	0.464
Current per turn, A	109,375	109,375	13,140	16,400	58,064
Voltage per set					
Peak, V	1,000	1,000	650	650	350
Flat top, V	435	165	185	200	150
Copper current density, A/cm^2	2,819	2,722	3,180	2,860	1,000
Water flowrate per set, gal/min	100	36	6	4	150
Average coil temperature rise, ^oC	10	9	17	10	20

DISCLAIMER

This report was prepared as an account of work sponsored by an agency of the United States Government. Neither the United States Government nor any agency thereof, nor any of their employees, makes any warranty, express or implied, or assumes any legal liability or responsibility for the accuracy, completeness, or usefulness of any information, apparatus, product, or process disclosed, or represents that its use would not infringe privately owned rights. Reference herein to any specific commercial product, process, or service by trade name, trademark, manufacturer, or otherwise does not necessarily constitute or imply its endorsement, recommendation, or favoring by the United States Government or any agency thereof. The views and opinions of authors expressed herein do not necessarily state or reflect those of the United States Government or any agency thereof.

Helical Field Coils

Two helical field (HF) coils are required, each of which loops the plasma six times. In order to simplify fabrication and allow for parallel assembly operations, the HF coil conductor and structure will be manufactured as a set of twenty four identical upper and lower segments. These segments will be connected into a continuous pair of coils during assembly on site by means of joints. Accurately machined mounting points are provided for attaching the coil structure to the machine support structure and assuring precise alignment of the coil current center to conform to winding law tolerance requirements.

The coil structure is manufactured from 44-mm-thick stainless steel. Figure 3 illustrates one of the T-shaped structural segments. The present design allows a wide tolerance band for structure fabrication with tight tolerances only on holes which locate the conductor turns on the coil structure and tooling holes for locating the segments on the machine structure. The structural members are composed of a total of 24 identical upper and lower segments. The upper and lower parts are assembled with bolted joints and splice plates that act to integrate the coil structure into a continuous system.

The coil conductor, Figure 4, is formed from 35-mm by 137-mm OFHC copper. Sixteen turns, eight on each side of the T-shaped structure, make up the full coil conductor pack for each individual segment. The conductor is cooled by means of two 13-mm-diameter tubes brazed into the plate. Water cooling is required between plasma shots to remove the heat deposited by operation, or alternatively, heat is removed as generated during low field, long pulse operation. Insulation is applied to the individual turns, each turn is precisely aligned to reference points on the structure, and the pack is bolted to the pre-drilled structure. Ground wall insulation is included between the pack and the structure and the completed segment is vacuum potted with epoxy. The integrated conductor-structure segments will then have appropriate joints machined into the conductor turns.

One special coil segment on each helix will contain the coil leads. The crossover joint is shown in Figure 5. This arrangement is expected to produce field errors within acceptable limits. If not, small auxiliary coils in the lead area will be used to reduce field errors. The two HF coils will be connected in series for initial operation of the device.

Vertical Field Coils

Two pairs of vertical field (VF) coils are required for the ATF-1 device. The inside and outside diameters have been selected to allow installation of these coils with the HF coils in place. This is done to allow as much latitude as possible in the assembly sequence and to permit replacement without a major device disassembly.

The water cooled copper coils are shown in cross section in Figure 6. The pre-insulated coil conductor will be wound or installed on the structure bobbin, the bobbin will be closed and the assembly will then be vacuum potted with epoxy.

The main outer VF coils will be connected in series with the HF coils. Separate power supplies will be used for the pair of outer VF trim coils and the pair of inner VF coils.

Toroidal Field Coils

The toroidal field (TF) coils are designed to provide 0.5 Tesla of toroidal field at the centerline of the plasma. These coils will be designed to minimize the in-plane bending stresses so the shape of these coils will be very close to circular. There will be twelve TF coils with each coil having eight turns. A cross section of a typical TF coil is shown in Figure 7. Each coil will have two demountable lap joints to facilitate assembly and removal. The coils are designed with edge cooling passages located at both the inner and outer edges. Cooling is adequate to allow continuous operation at .25 Tesla. The TF coils will not be installed during initial operation of ATF-1 but can be added later.

Vacuum System

The vacuum vessel, Figure 8, is a torus with a major diameter of 4.2 M and a minor diameter of 1.2 M. The vessel is monolythic with a wall thickness of 6.4 mm and is not actively cooled during initial operation. Limiters will be used to prevent deposition of high plasma heat flux on the vessel wall.

Plasma access is thru 12 outside ports which are 1.0 M by 0.4 M, 12 inside ports 150-mm-in diameter and 12 ports each 400-mm diameter on the top and bottom of the vessel. The vessel will be field assembled during the device assembly phase from pre-fabricated segments. The 406-mm wide by 335-mm deep rectangular slots in the vessel accommodate the HF coils. These portions of the vacuum vessel will be pre-installed on the HF coil segments to reduce the amount of field welding required during vacuum vessel assembly.

Vacuum pumping is accomplished with mechanical pump-blower packages and turbomolecular pumps. Metal seals are used on all access ports.

Machine Support Structure

The machine support structure is designed to accurately position the HF, VF and TF coil sets and support them against the electromagnetic and gravity forces. The principal loads on the HF coils are radially outward hoop loads and overturning or side loads. The principal VF coil loads include a radial hoop force and a vertical force of attraction between VF coils in each pair. The TF coil loads are primarily hoop forces with a resultant radial centering force.

The structural concept for supporting the HF coils is an external shell composed of identical upper and lower toroidal shell segments and intermediate shell panels. As shown in Figures 9 through 11, the shell segments are

joined at insulated, bolted flanges to prevent circulating eddy currents. During assembly, adjustable tooling balls are accurately located in the lower shell to form a reference datum for positioning each lower HF coil segment. The lower portion of the vacuum vessel is then installed, followed by the upper HF coil segments and the remainder of the vacuum vessel. The intermediate shell panels and upper shell assembly are added to complete the structure. Brackets attached to the radial shell flanges locate the inner and outer VF coils, and adjustable columns between V⁻ coil pairs carry the principal loads. Additional brackets tie the TF coils to the two sets of VF coils.

When the HF coil set is energized, the radial force is transmitted through the coil case into the structural shell where it is carried in hoop and axial tension. The side or overturning forces are carried as a torsional load between the upper and lower shell assemblies, with the intermediate shell panels in shear. The side load is minimized by connecting the HF and outer VF coil sets in series to insure a minimum net vertical field. The VF and TF coil forces are carried through their attachment brackets back into the structural shell.

The vacuum vessel weight is supported from the lower half of the shell on sliding supports that allow thermal expansion in the radial direction. The entire device is supported on 24 columns located under the shell segment flanges.

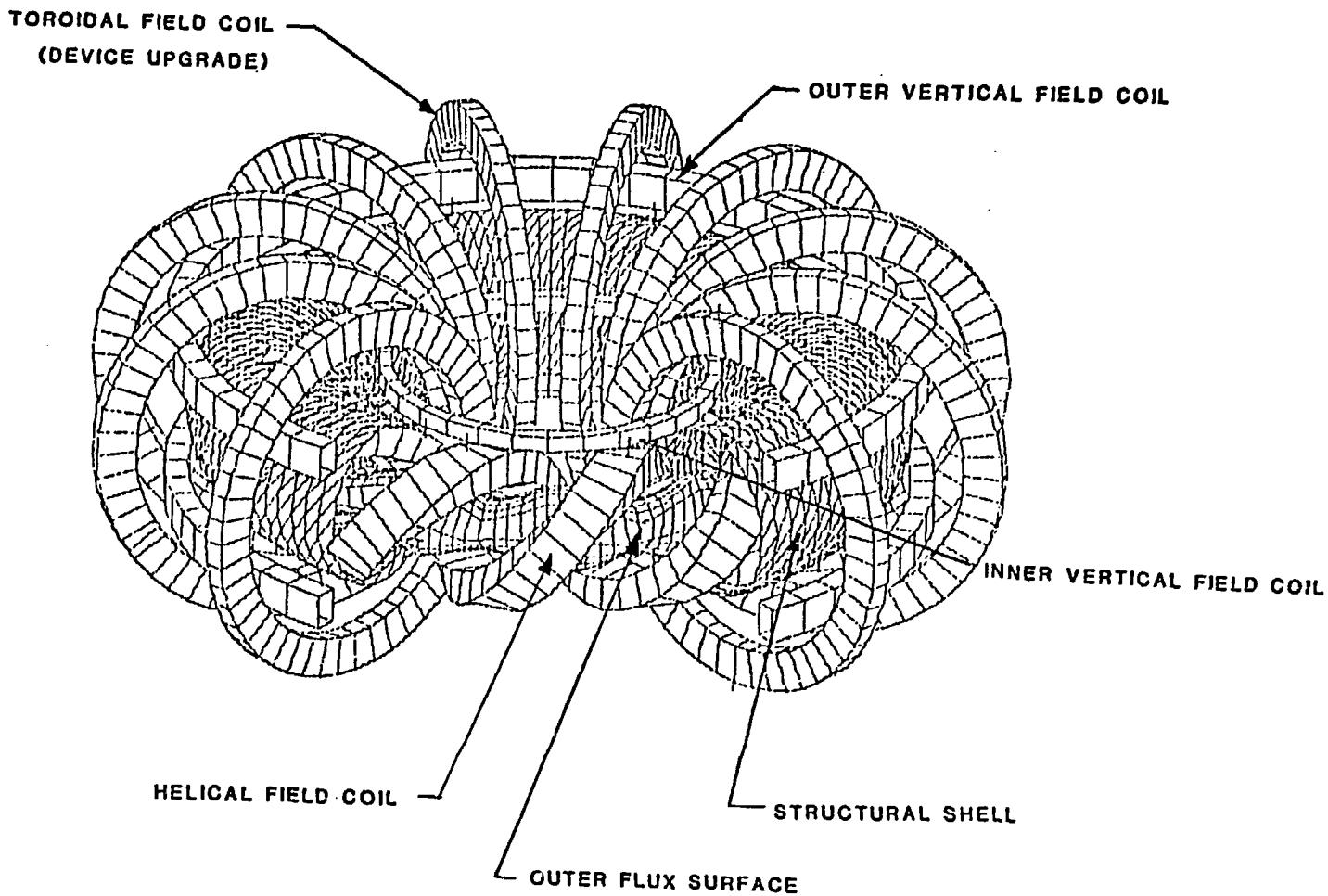

FIGURE 1 ATF COIL SYSTEM

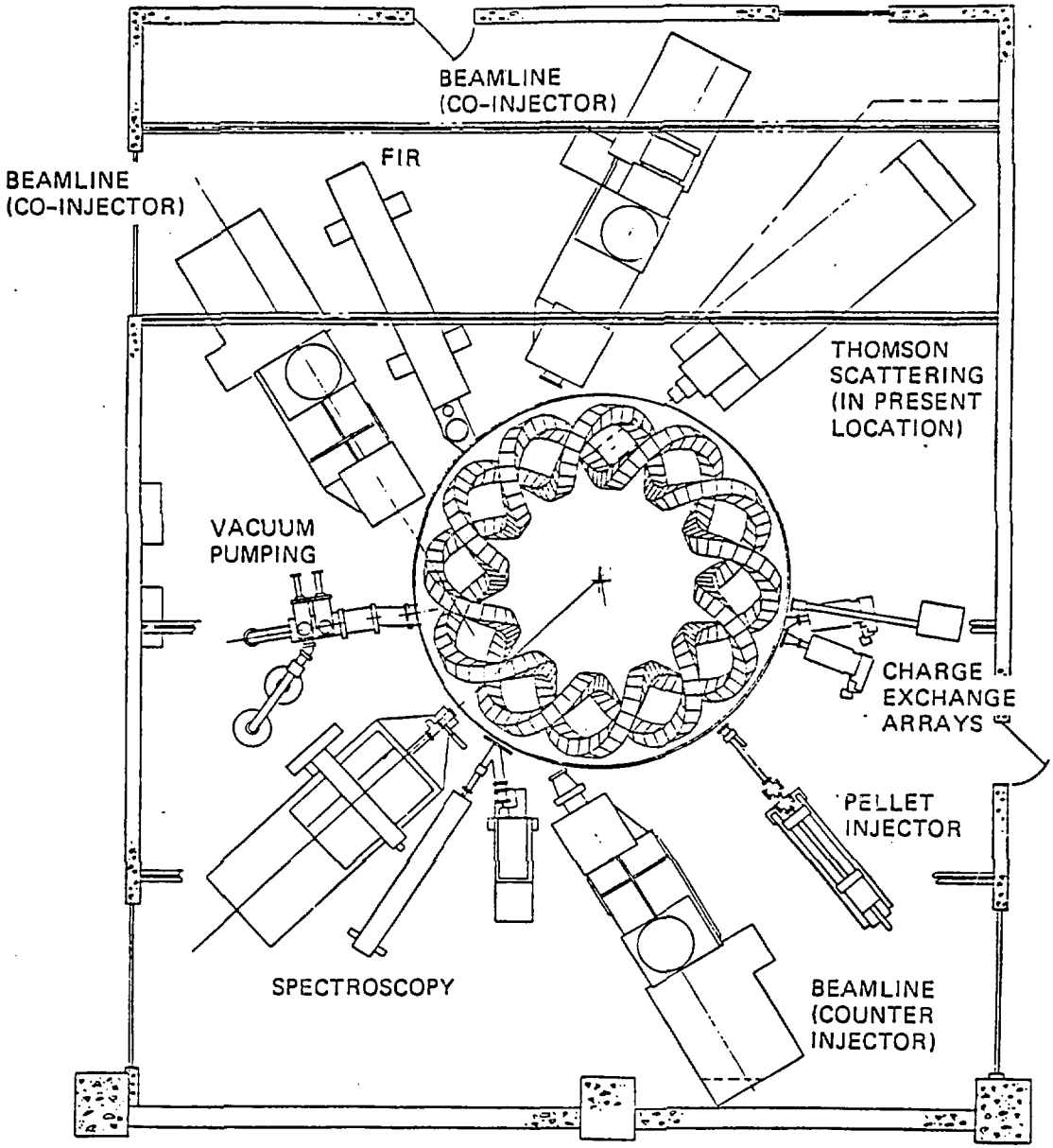

FIGURE 2 PLAN VIEW OF ATF-1 LOCATION IN ISX-B ENCLOSURE

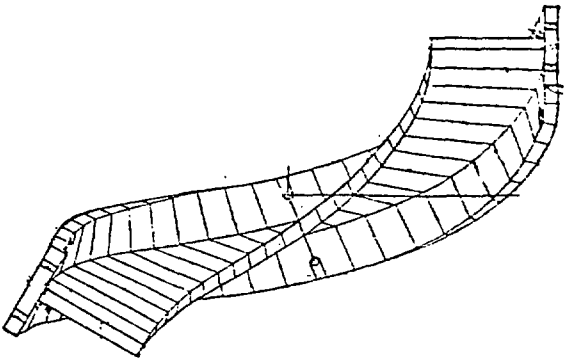

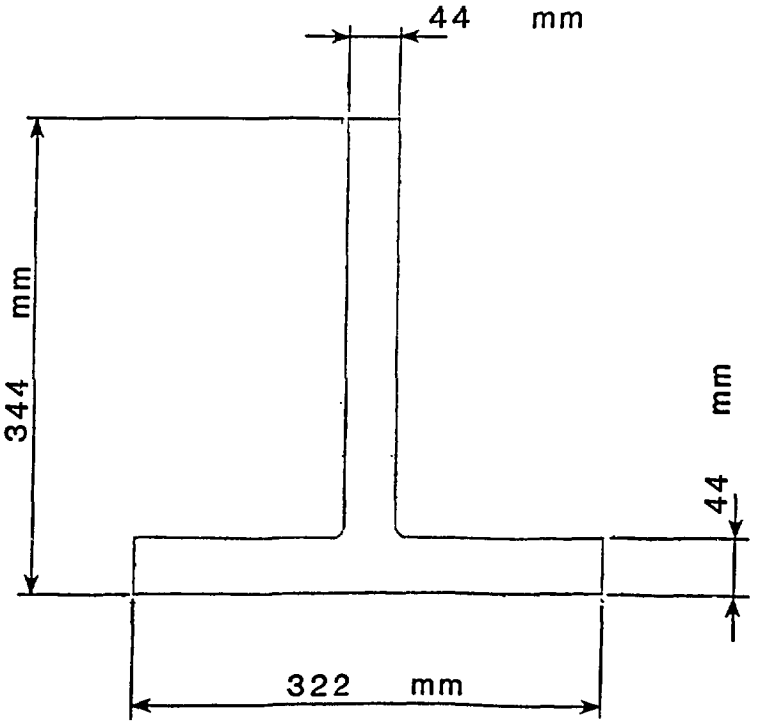

FIGURE 3 HF COIL STRUCTURE

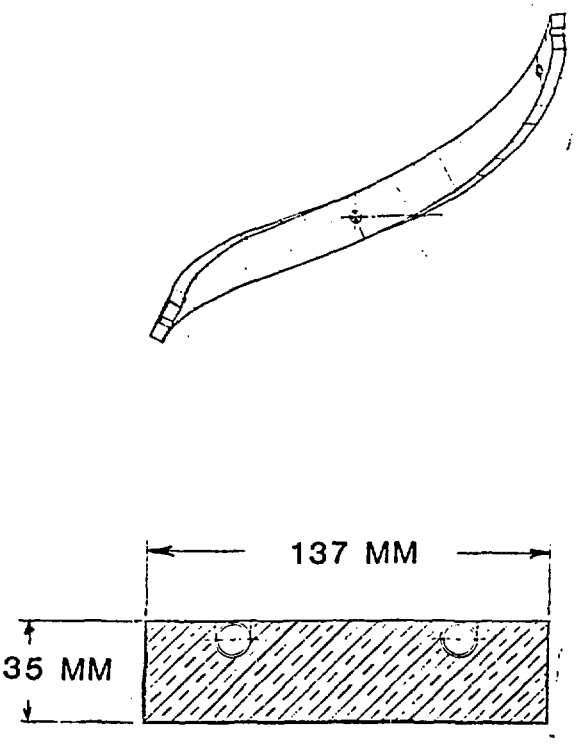

FIGURE 4 HF COIL CONDUCTOR

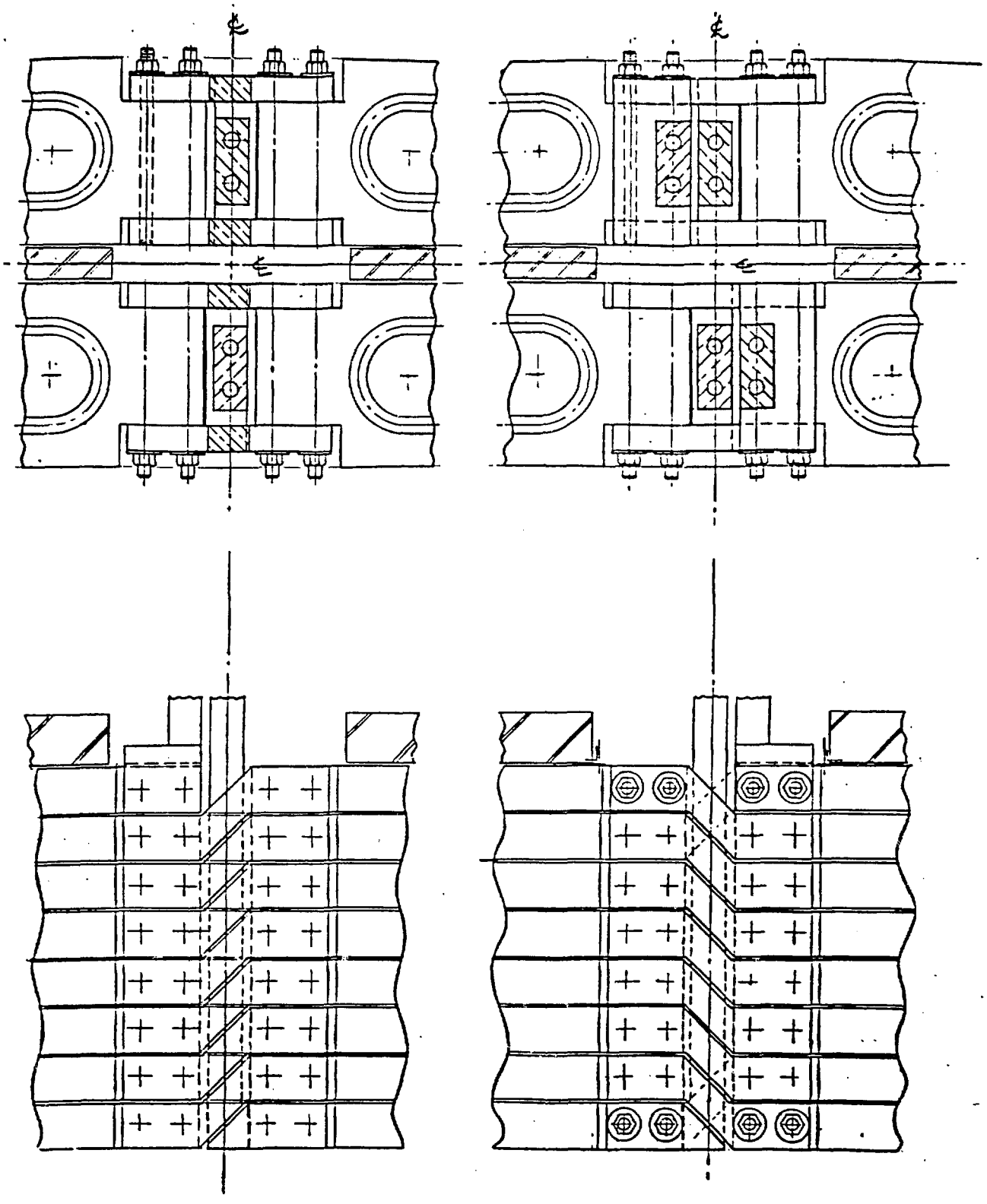

FIGURE 5 H.F. COIL CROSS-OVER CONCEPT

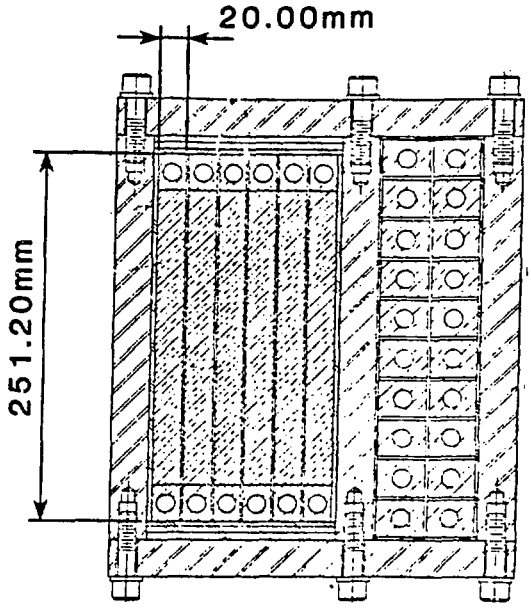

OUTER VF COIL WITH TRIM COILS

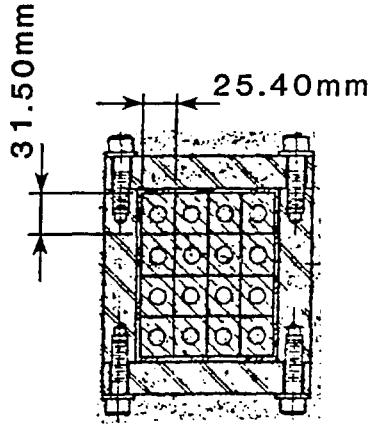

INNER VF COIL

FIGURE 6 VF COIL CROSS-SECTION

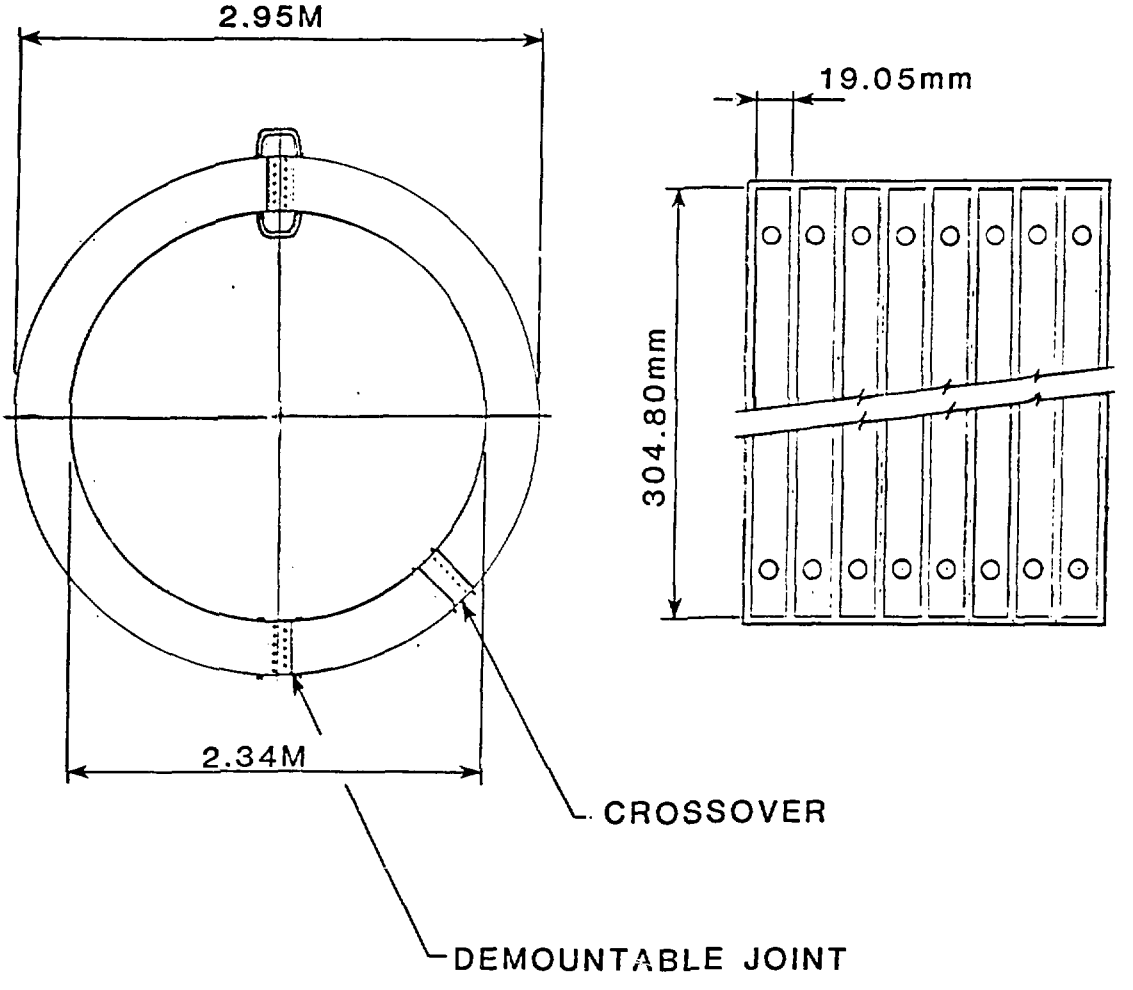

FIGURE 7 TF COILS

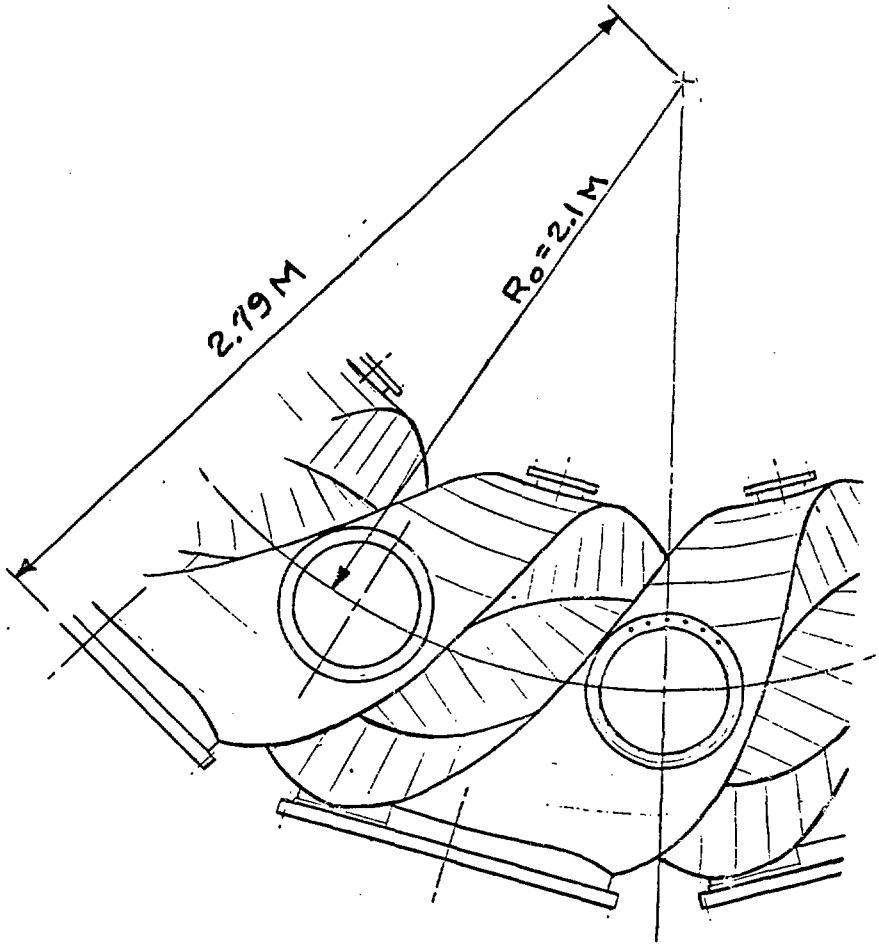

FIGURE 8 VACUUM VESSEL

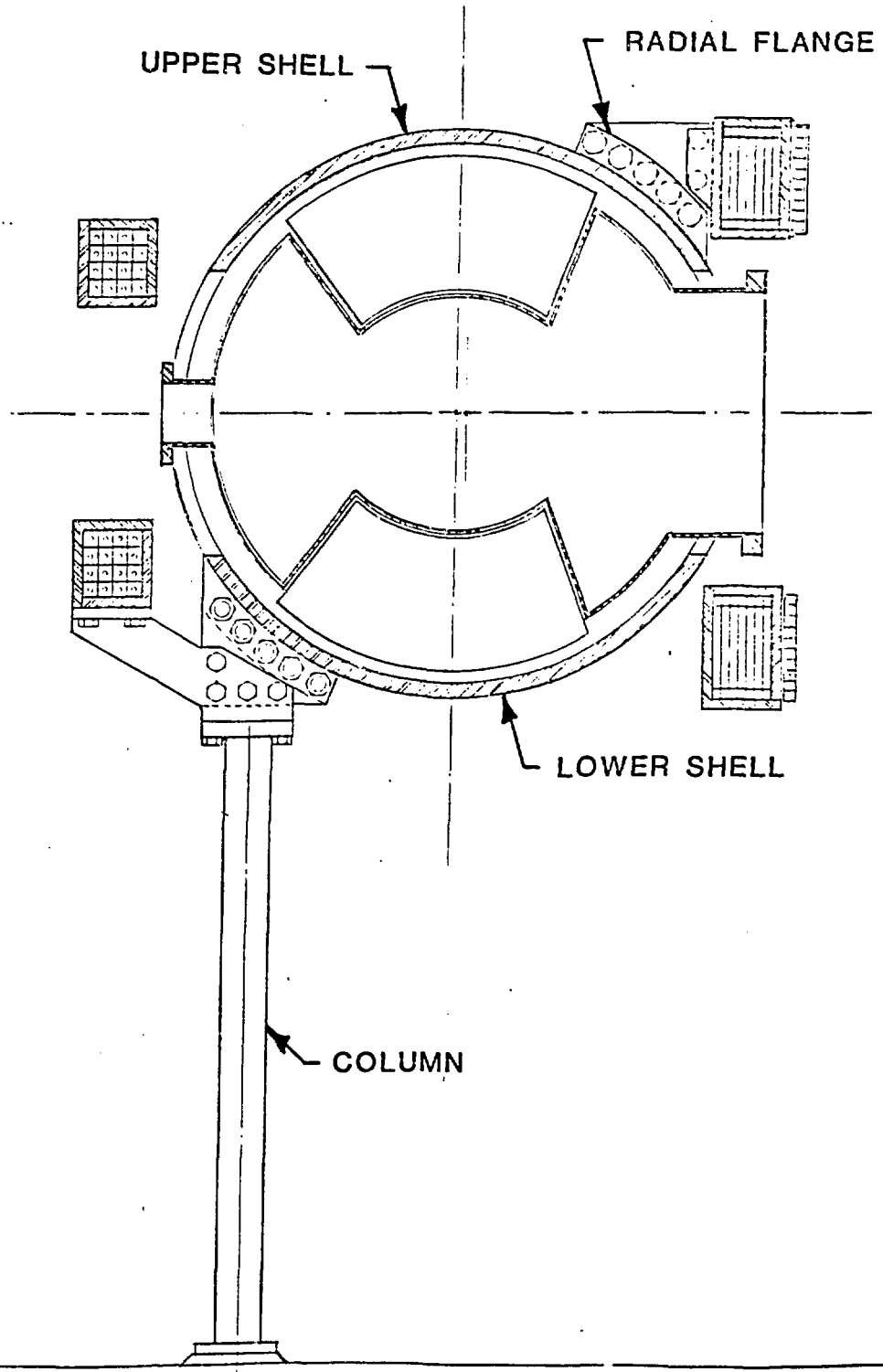

FIGURE 9 ELEVATION OF STRUCTURAL SUPPORT

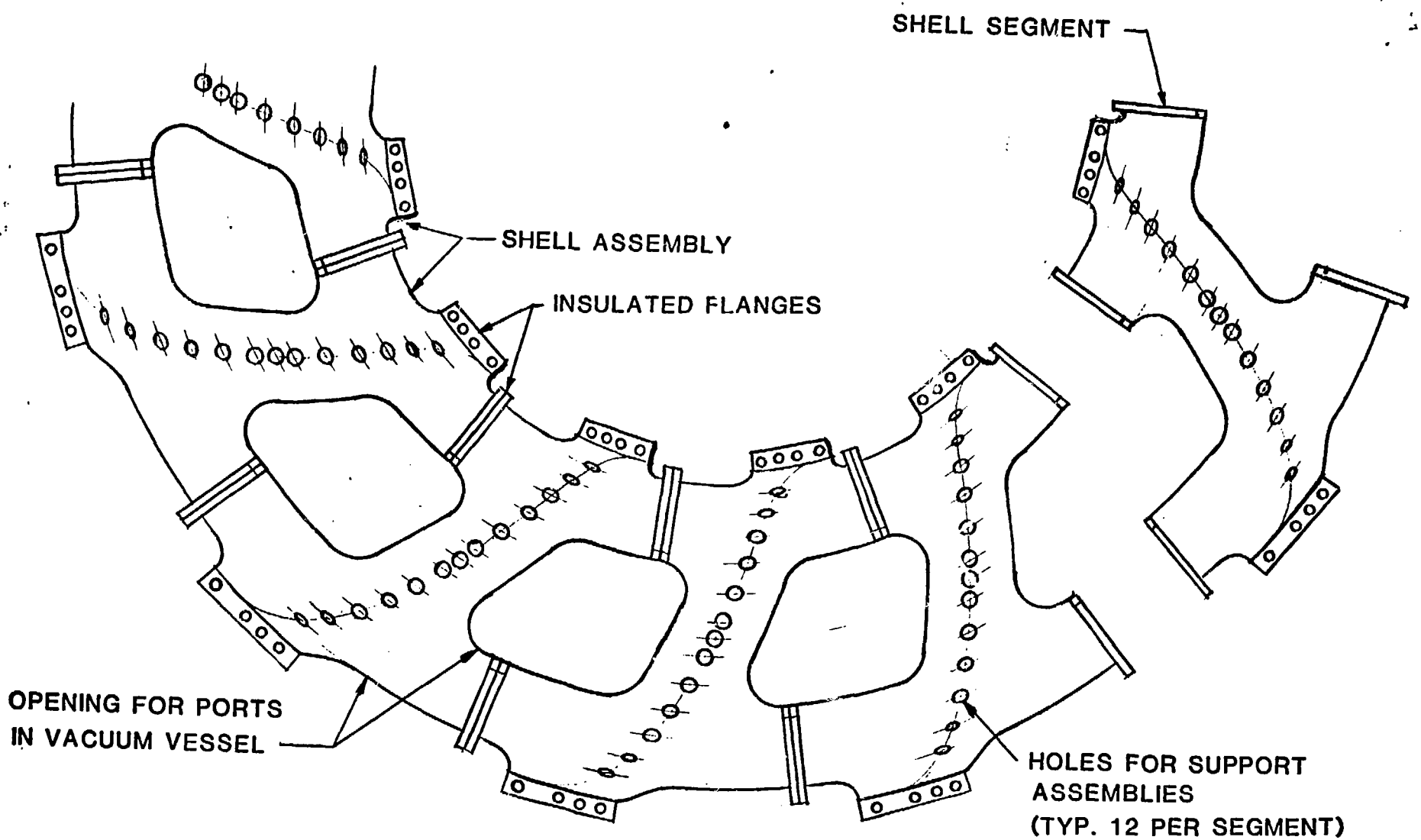

PLAN VIEW

FIGURE 10

SEGMENTED SHELL SUPPORT STRUCTURE

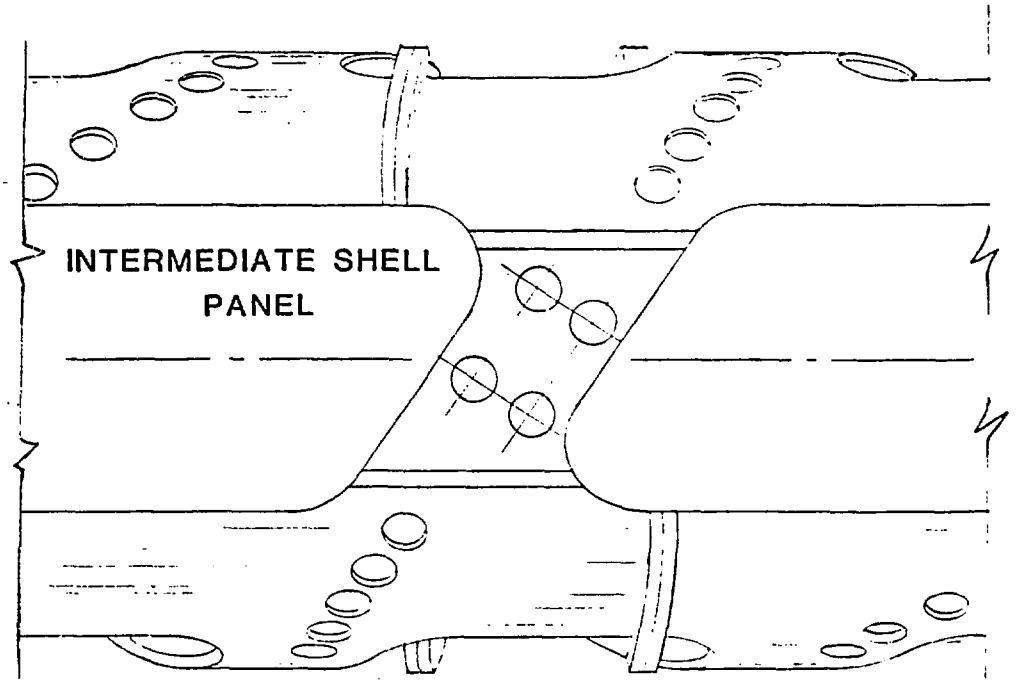

OUTSIDE LOOKING IN

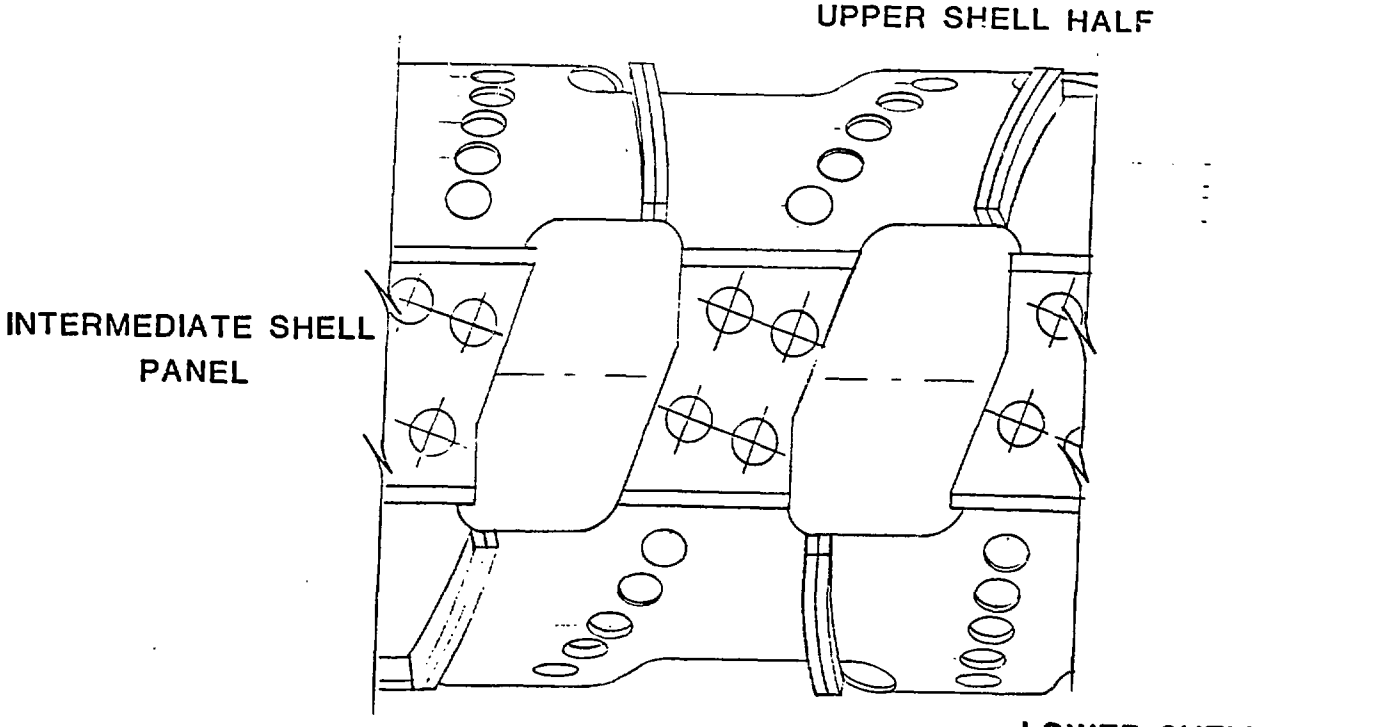

INSIDE LOOKING OUT

SEGMENTED SHELL SUPPORT STRUCTURE
ELEVATION VIEW

FIGURE 11

DISCLAIMER

This report was prepared as an account of work sponsored by an agency of the United States Government. Neither the United States Government nor any agency thereof, nor any of their employees, makes any warranty, express or implied, or assumes any legal liability or responsibility for the accuracy, completeness, or usefulness of any information, apparatus, product, or process disclosed, or represents that its use would not infringe privately owned rights. Reference herein to any specific commercial product, process, or service by trade name, trademark, manufacturer, or otherwise does not necessarily constitute or imply its endorsement, recommendation, or favoring by the United States Government or any agency thereof. The views and opinions of authors expressed herein do not necessarily state or reflect those of the United States Government or any agency thereof.