CONF-8706180--3

"The submitted manuscript has been authored by a contractor of the U.S. Government under contract No. DE-AC05-84OR21400. Accordingly, the U.S. Government retains a non-exclusive, royalty-free license to publish or reproduce the published form of this contribution, or allow others to do so, for U.S. Government purposes."

Systems Analysis of INTOR-Like Designs

CONF-8706180--3

DE87 013544

C. A. Flanagan
Fusion Engineering Design Center/
Westinghouse

DISCLAIMER

This report was prepared as an account of work sponsored by an agency of the United States Government. Neither the United States Government nor any agency thereof, nor any of their employees, makes any warranty, express or implied, or assumes any legal liability or responsibility for the accuracy, completeness, or usefulness of any information, apparatus, product, or process disclosed, or represents that its use would not infringe privately owned rights. Reference herein to any specific commercial product, process, or service by trade name, trademark, manufacturer, or otherwise does not necessarily constitute or imply its endorsement, recommendation, or favoring by the United States Government or any agency thereof. The views and opinions of authors expressed herein do not necessarily state or reflect those of the United States Government or any agency thereof.

MASTER

*Research sponsored by the Office of Fusion Energy, U.S. Department of Energy, under Contract No. DE-AC05-84OR21400 with Martin Marietta Energy Systems, Inc.

DISTRIBUTION OF THIS DOCUMENT IS UNLIMITED

SYSTEMS ANALYSIS OF INTOR-LIKE DESIGNS

C. A. FLANAGAN
FUSION ENGINEERING DESIGN CENTER/WESTINGHOUSE

INTOR REVIEW
GEORGIA INSTITUTE OF TECHNOLOGY
ATLANTA, GEORGIA
JUNE 25-26, 1987

CONTRIBUTORS

C. A. FLANAGAN

L. DELEANU

J. D. GALAMBOS

Y-K. M. PENG

R. L. REID

D. J. STRICKLER

J. N. DOGGETT

L. J. PERKINS

INTOR WORKSHOP SYSTEMS ANALYSIS OF "INTOR-LIKE" DESIGNS

FOR JULY 13 - 24, 1987 SESSION

- EACH TEAM WILL "BENCHMARK" THEIR SYSTEMS ANALYSIS MODELS TO THE INTOR DESIGN.
- EACH TEAM WILL DETERMINE THE IMPACT UPON THE INTOR DESIGN OF:
  - REPLACING THE INTOR PHYSICS CONSTRAINTS IN TOTO WITH THE PHYSICS CONSTRAINTS USED IN THE RESPECTIVE NATIONAL DESIGN.
  - REPLACING THE INTOR ENGINEERING CONSTRAINTS IN TOTO WITH THE ENGINEERING CONSTRAINTS USED IN THE RESPECTIVE NATIONAL DESIGN.
  - REPLACING THE INTOR DRIVING FEATURES IN TOTO WITH THE DRIVING FEATURES USED IN THE RESPECTIVE NATIONAL DESIGN.
- EACH TEAM WILL DETERMINE THE IMPACT UPON THE INTOR DESIGN OF REPLACING INDIVIDUAL INTOR CONSTRAINTS OR DRIVING FEATURES WITH THE CORRESPONDING CONSTRAINTS OR DRIVING FEATURES USED IN THE RESPECTIVE NATIONAL DESIGN.

FOR NOVEMBER 9-20, 1987 SESSION

- EACH TEAM WILL DETERMINE THE IMPACT UPON THEIR NATIONAL DESIGN OF REPLACING IN TOTO THEIR PHYSICS AND ENGINEERING CONSTRAINTS AND DRIVING FEATURES WITH THOSE USED BY THE OTHER THREE NATIONAL DESIGN TEAMS.
- EACH TEAM WILL APPLY THEIR COSTING METHODOLOGY TO DETERMINE THE RELATIVE COSTS OF FER, INTOR, NET, OTR AND TIBER.

TOKAMAK SYSTEMS CODE

- MODELS A TOKAMAK DESIGN
- INCLUDES PHYSICS, ENGINEERING, AND INTERFACES
- INCORPORATES:
  - MULTIPLE VARIABLES
  - MULTIPLE CONSTRAINTS
- CAN SEARCH FOR "FIGURE-OF-MERIT" SUCH AS "MINIMUM MAJOR RADIUS"
- ALLOWS ALL "VARIABLES" TO CHANGE SUBJECT TO "CONSTRAINTS"
- DESIGNER HAS CHOICE OF ADDING/DELETING "VARIABLES" AND/OR "CONSTRAINTS"

TYPICAL VARIABLES AND CONSTRAINTS

Variables	Design Constraints
major radius	beta limit
aspect ratio	density limit
field at major radius	Q or IM requirement
plasma density	plasma current limit
plasma temperature	volt-second requirement
TF coil J	TF coil J(B) limit
OH coil J	OH coil J(B) limit
TF coil thickness	TF coil stresses
OH coil thickness	OH coil stresses
bucking cylinder thickness	bucking cylinder stresses
OH bore thickness	radial build
TF coil case thickness	vertical build
shield thicknesses	wall load requirement
	TF coil nuclear heating limit
	coil insulator damage limit
	biological dose limit

INTOR BENCHMARK

Case	INTOR "Red Book"	1 INTOR Benchmark	2 Minimum R INTOR
R_o (m)	5.0	5.0	4.874
a (m)	1.20	1.20	1.201
A	4.2	4.2	4.06
B_t (T)	5.5	5.5	5.42
B_{max} (T)	~11	10.78	10.9
I (MA)	8.0	8.0	8.146
P-DT (MW)	585	581	572
W/L (MW/m^2)	1.3	1.17	1.17
β (%)	4.9	4.85	5.01
Te (keV)	10.0	10.0	9.94
n_e (E14 cm^{-3})	1.4	1.45	1.46
J_{TF}/WP (A/cm^2)	2540	2970[1]	2808[1]
J_{TF}/OA (A/cm^2)	1240	1450	1398
J_{OH}/WP (A/cm^2)	N/S	1610	2033
J_{OH}/OA (A/cm^2)	~1500[2]	1320[2]	1588[2]
Bore (cm)	115.0	115.0	111.8
OH (cm)	55.0	54.0	41.1
BC (cm)	28.0 } 95.0	28.0 } 95.0	27.3 } 98.4
TF (cm)	67.0	67.0	71.1
Shield + FW (cm)	80.0	80.0	80.0
S/O-I (cm)	20.0	20.0	20.0
S/O-O (cm)	10.0	10.0	10.0
Total V-s required (V-s)	112	108	106

1. US conductor results in ~2900 A/cm^2
2. Only current density specified is overall of ~1500 A/cm^2

INTOR SCRAPE-OFF VARIATION

CASE	2 20/10	11 15/8	12 10/5	13 6/3
R_o (m)	4.874	4.74	4.60	4.5
a (m)	1.201	1.18	1.17	1.16
A	4.06	4.02	3.93	3.87
B_t (T)	5.42	5.38	5.27	5.18
B_{max} (T)	10.9	10.8	10.6	10.5
I (MA)	8.146	8.0	8.0	8.0
P-DT (MW)	572	531	496	471
W/L (MW/m^2)	1.17	1.17	1.17	1.17
β (%)	5.01	5.06	5.2	5.3
T_e (keV)	9.94	9.73	9.55	9.5
n_e ($E14cm^{-3}$)	1.46	1.65	1.67	1.66
J_{TF}/WP (A/cm^2)	2808	2954	3211	3432
J_{TF}/OA (A/cm^2)	1398	1429	1481	1522
J_{TF}/WP (A/cm^2)	2033	2050	2066	2079
J_{TF}/OA (A/cm^2)	1588	1597	1607	1613
Bore (cm)	112	109	107	105.6
OH (cm)	41	41	40	40
BC (cm)	27.3	26	24	24
TF (cm)	71.1	69	65	62
Shield + FW (cm)	80	80	80	80
S/O-I (cm)	20	15	10	6
S/O-O (cm)	10	8	5	3
Total V-s required (V-s)	106	102	99	96

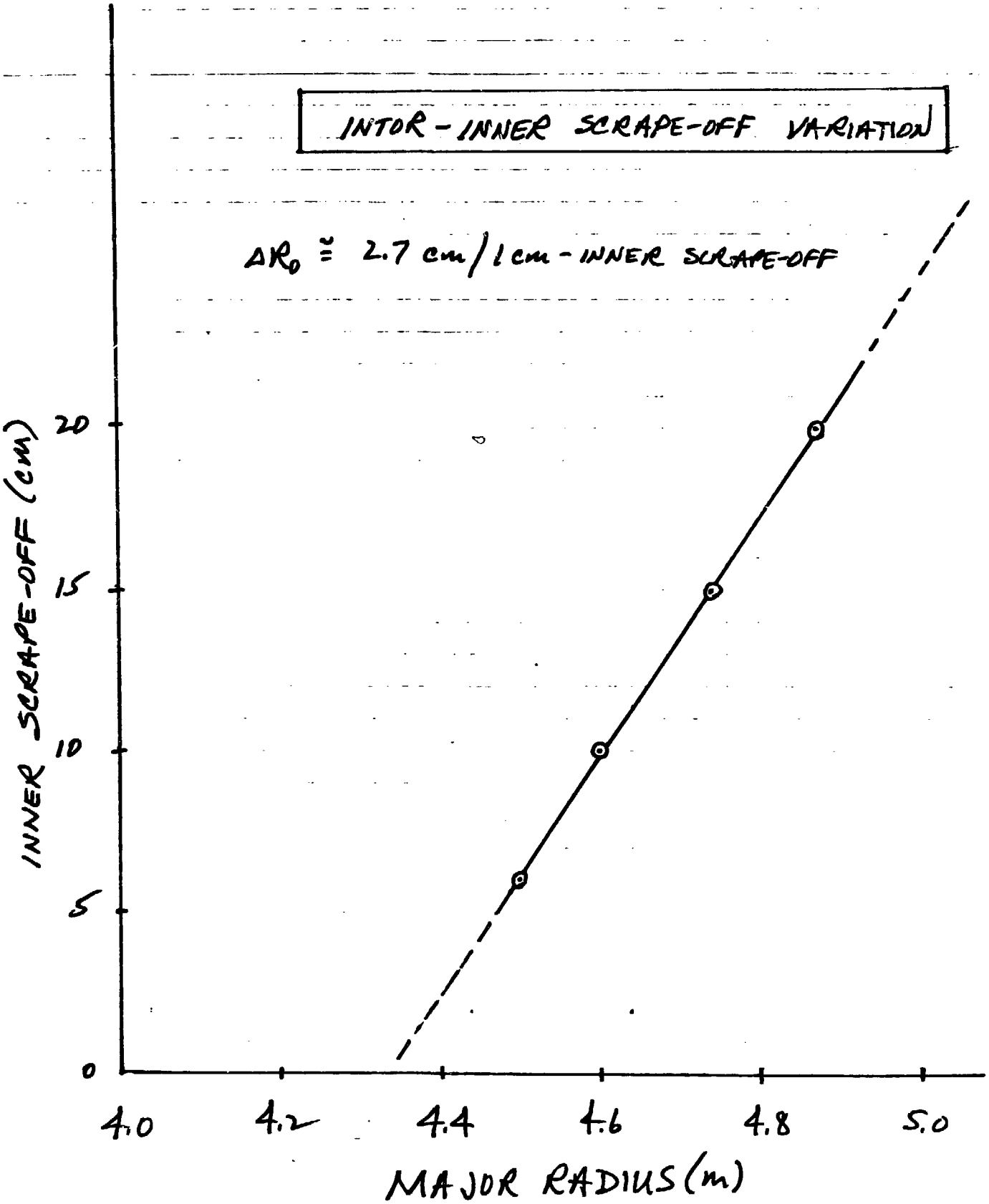
INTOR - INNER SCRAPE-OFF VARIATION
$\Delta R_0 \cong$ 2.7 cm/1 cm - INNER SCRAPE-OFF
INNER SCRAPE-OFF (cm)
0
5
10
15
20
4.0
4.2
4.4
4.6
4.8
5.0
MAJOR RADIUS (m)

INTOR INNER SHIELD VARIATION

Case	2 (80)	7 75	8 70	9 65	10 60
R_o (m)	4.874	4.76	4.65	4.53	4.43
a (m)	1.201	1.18	1.16	1.15	1.14
A	4.06	4.04	4.00	3.95	3.90
B_t (T)	5.42	5.43	5.42	5.38	5.35
B_{max} (T)	10.9	10.8	10.8	10.7	10.6
I (MA)	8.146	8.04	8.0	8.0	8.0
P-DT (MW)	572	548	529	511	494
W/L (MW/m^2)	1.17	1.17	1.17	1.17	1.17
β (%)	5.01	5.03	5.1	5.2	5.3
T_e (keV)	9.94	9.8	9.7	9.6	9.5
n_e($E14cm^{-3}$)	1.46	1.66	1.70	1.73	1.76
J_{TF}/WP (A/cm^2)	2808	2880	2993	3135	3293
J_{TF}/OA (A/cm^2)	1398	1413	1437	1465	1495
J_{OH}/WP (A/cm^2)	2033	2046	2059	2068	2084
J_{OH}/OA (A/cm^2)	1588	1595	1602	1607	1616
Bore (cm)	112	110	108	106	105
OH (cm)	41	41	40	40	40
BC (cm)	27.3	26.6	25.6	24.6	23.9
TF (cm)	71.1	70	68.3	66.2	64.1
Shield + FW (cm)	80	75	70	65	60
S/O-I (cm)	20	20	20	20	20
S/O-O (cm)	10	10	10	10	10
Total V-s required (V-s)	106	103	100	98	96

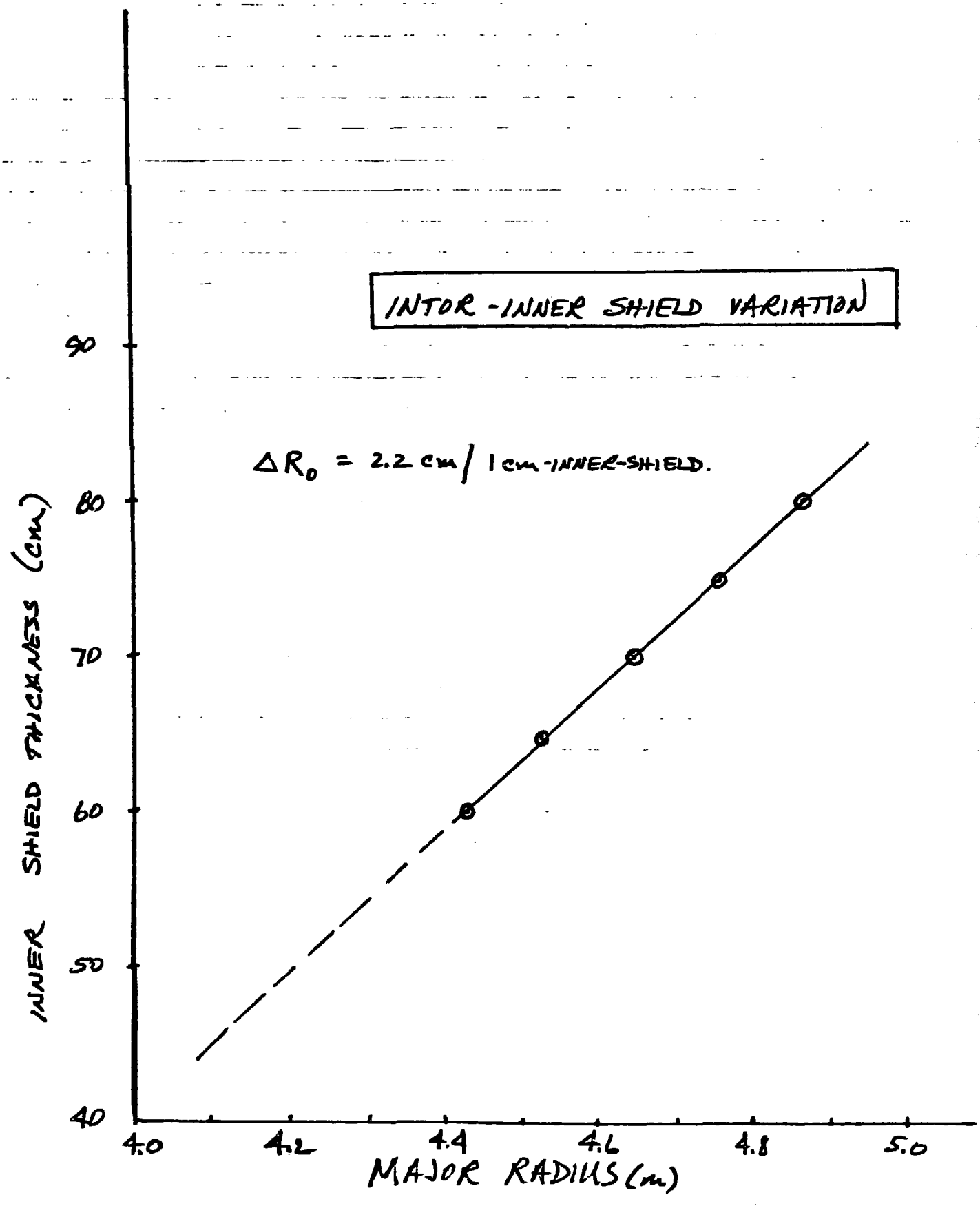
INTOR - INNER SHIELD VARIATION
ΔR_0 = 2.2 cm / 1 cm-INNER-SHIELD.
INNER SHIELD THICKNESS (cm)
90
80
70
60
50
40
4.0
4.2
4.4
4.6
4.8
5.0
MAJOR RADIUS (m)

INTOR TOROIDAL FIELD COIL CURRENT DENSITY VARIATION

Case	2 (1.00)[1]	3 (0.65)	4 (0.86)	5 (1.34)	6 (1.68)
R_o (m)	4.874	5.29	5.02	4.70	4.61
a (m)	1.201	1.34	1.27	1.17	1.16
A	4.06	3.95	3.96	4.03	3.98
B_t (T)	5.42	5.19	5.27	5.43	5.40
B_{max} (T)	10.9	10.2	10.6	11.2	11.3
I (MA)	8.146	9.02	8.61	8.00	8.00
P-DT (MW)	572	684	618	537	522
W/L (MW/m^2)	1.17	1.17	1.17	1.17	1.17
β (%)	5.01	5.19	5.16	5.06	5.13
Te (keV)	9.94	10.55	10.20	9.74	9.65
n_e($E14cm^{-3}$)	1.46	1.43	1.53	1.68	1.71
J_{TF}/WP (A/cm^2)	2808	1837	2412	3762	4720
J_{TF}/OA (A/cm^2)	1398	1052	1263	1657	1861
J_{OH}/WP (A/cm^2)	2033	1983	2013	2046	2010
J_{OH}/OA (A/cm^2)	1588	1560	1577	1595	1573
Bone (cm)	111.8	119.2	114.7	109	106.6
OH (cm)	41.1	42.5	41.6	40.7	41.5
BC (cm)	27.3	26.7	26.4	27.1	26.7
TF (cm)	71.1	90.4	76.9	60.7	54.2
Shield + FW (cm)	80	80	80	80	80
S/O-I (cm)	20	20	20	20	20
S/O-O (cm)	10	10	10	10	10
Total V-s required (V-s)	106	123	113.5	101.7	99.6

1. TF coil density in winding pack normalized to INTOR reference.

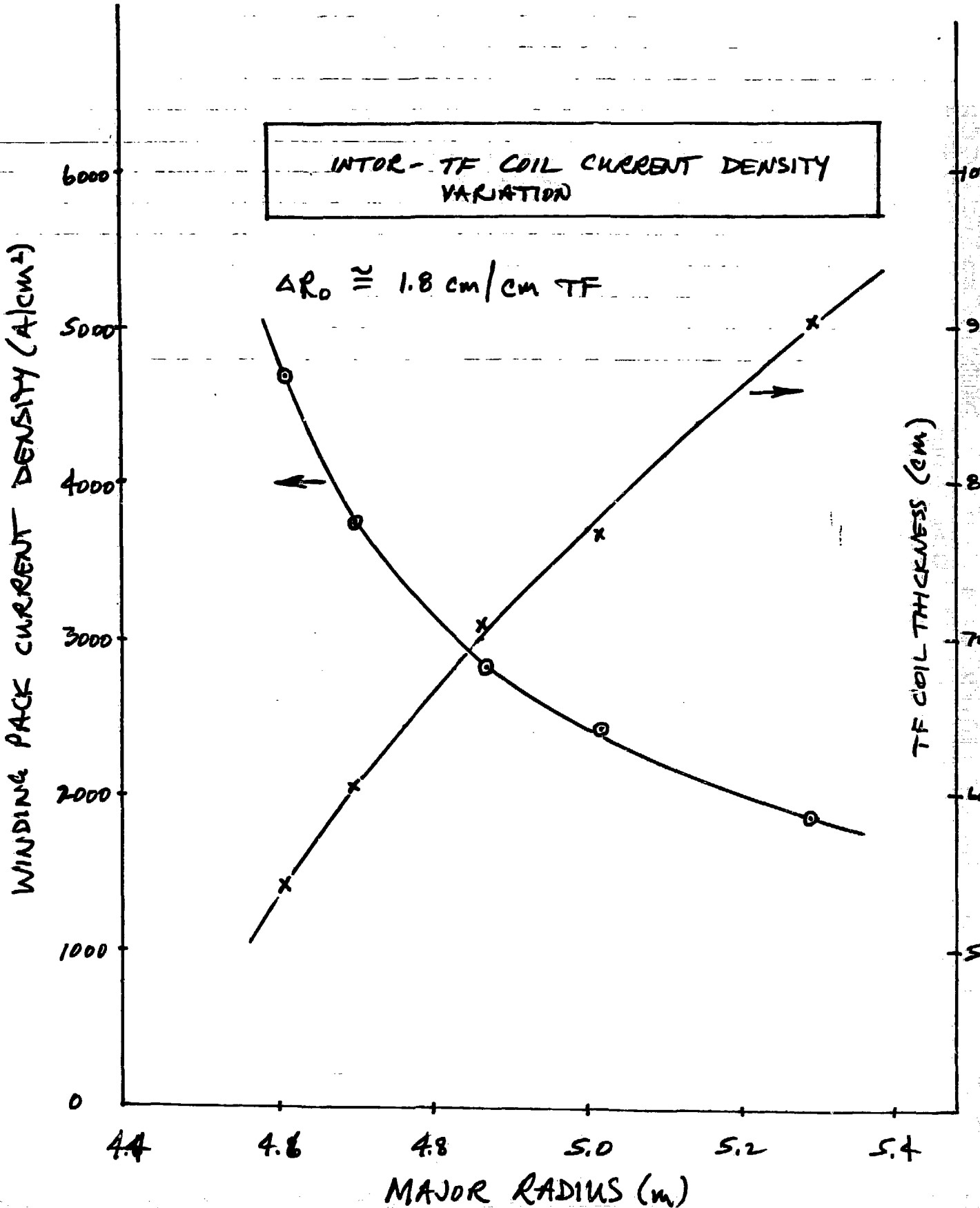
INTOR - TF COIL CURRENT DENSITY VARIATION
$\Delta R_o \cong 1.8$ cm/cm TF
WINDING PACK CURRENT DENSITY (A/cm²)
6000
5000
4000
3000
2000
1000
0
TF COIL THICKNESS (cm)
10
9
8
7
6
5
4.4
4.6
4.8
5.0
5.2
5.4
MAJOR RADIUS (m)

INTOR WITH TIBER PHYSICS

Changes

Add hot neutral beam ion current drive

Add Q-val equation

No V-s requirement on bore/OH

No inductive start/burn

	INTOR	TIBER
Density profile	0.27	1.02
Temperature profile	0.54	0.58
Density limit	Murakami	Greenwald
Kappa	1.88	1.88
Triangularity	0.25	0.25
Divertor	Single null	Single null
q	2.26	2.26
Ripple	1.2	1.0
Coefficient for Troyon beta scaling	4.0	3.1

INTOR WITH "TIBER" PHYSICS

Case	Minimum R INTOR	TIBER (Systems Code)	INTOR (R_{min}) TIBER physics	
			A	B
R_0 (m)	4.87	3.0	4.95	5.43
a (m)	1.20	0.834	1.64	1.43
A	4.06	3.60	3.02	3.80
B_t (T)	5.42	5.55	4.51	5.5
B_{max} (T)	10.90	11.1	10.8	10.9
I (MA)	8.15	10.0	13.7	10.7
P-DT (MW)	572	314	723	701
W/L (MW/m^2)	1.17	1.29	1.1	1.1
β (%)	5.01	6.1	5.7	4.2
T_e (keV)	9.94	15.7	11.5	12.2
n_e ($E14cm^{-3}$)	1.46	1.1	0.9	0.93
J_{TF}/WP (A/cm^2)	2808	3967	1900	2290
J_{TF}/OA (A/cm^2)	1398	2080	1030	1254
J_{OH}/WP (A/cm^2)	2033	4203	2487	1917
J_{OH}/OA (A/cm^2)	1588	2790	1795	1522
Bore (cm)	112	55	55	129
OH (cm)	41	52	30	44
BC (cm)	27	--	24	31
TF (cm)	71	49	107	79.5
Shield + FW (cm)	80	48	80	80
S/O-I (cm)	20	6	20	20
S/O-O (cm)	10	6	10	10
Total V-s required (V-s)	106	66	152/51	147

A. No V-s requirement, $Q \leq 5$, noninductive current drive.
B. Inductive start/burn (100 s)

PARAMETERS - TIBER AND NET

	TIBER-II	NET
ENGINEERING		
Blanket + Shield (m)		
Outboard	1.1	1.2
Inboard	0.48	1.09
Total Gaps (m), including scrape-off and cryostat from TFC to plasma		
Outboard	0.1	1.2
Vertical	0.45	1.9
TFC J_c, B_{max} (kA/cm^2, T)	2.1, 12	1.4, 10.5
OHC J_c, B_{max} (kA/cm^2, T)	2.8, 14	2.0, 10
PHYSICS		
Elongation at 95% flux	2.4	1.9
q at 95% flux	3.8	2.7
Profile factors		
Density	1.0	0.26
Temperature	0.6	0.52
Troyon coefficient	2.8	3.5
Induction cap./LpIp (at 10 MA)	1.0	1.6
Ignition margin	(Q > 5)	2.5 (Asdex-H)

TIBER/NET

	TIBER	NET	TINET (Net physics TIBER engineering)
R_o (m)	3.00	5.18	3.38
a (m)	0.834	1.35	1.25
A	3.60	3.84	2.71
B_t (T)	5.55	5.00	3.85
B_{max} (T)	11.1	10.80	8.9
I (MA)	10.01	10.81	12.88
P-DT (MW)	314	670	367
W/L (MW/m^2)	1.29	1.04	0.97
β (%)	6.1	5.3	9.4
T_e (keV)	15.7	9.3	13.7
n_e(E14cm^{-3})	1.1	1.7	1.1
J_{TF}/WP (A/cm^2)	3967	2225	7425
J_{TF}/OA (A/cm^2)	2080	1402	2561
J_{OH}/WP (A/cm^2)	4203	2572	4090
J_{OH}/OA (A/cm^2)	2790	2000	3100
Bore (cm)	55	135	84
OH (cm)	52	40	36
BC (cm)	--	--	--
TF (cm)	49	70	30
Shield + FW (cm)	48	101	48
S/O-I (cm)	6	15	6
S/O-O (cm)	6	12	12
Total Vs required (V-s)	66	148	98

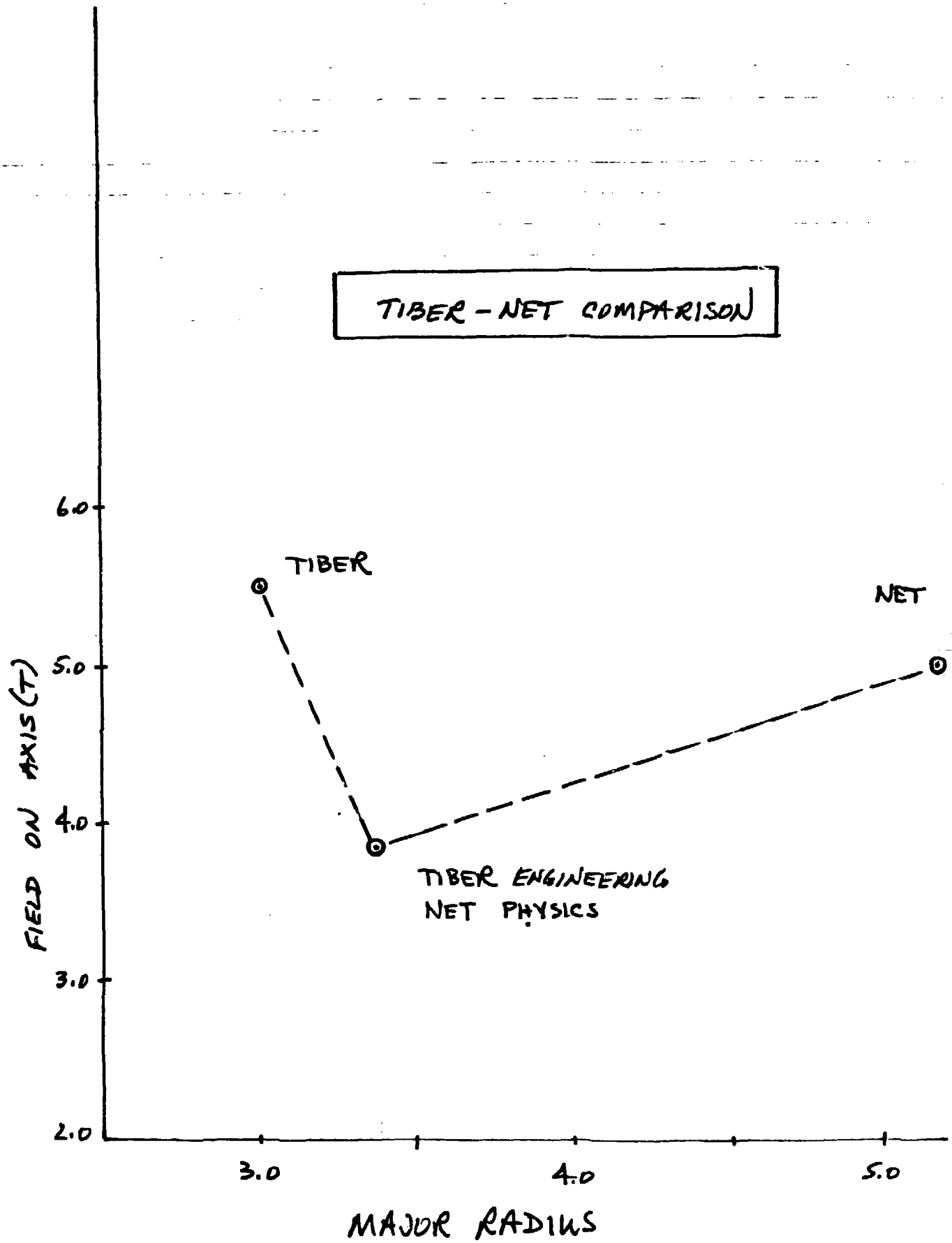
TIBER - NET COMPARISON
TIBER
NET
TIBER ENGINEERING
NET PHYSICS
FIELD ON AXIS (T)
6.0
5.0
4.0
3.0
2.0
3.0
4.0
5.0
MAJOR RADIUS

BENCHMARK OF FER-ACS

1. Radial and vertical builds were input.
2. Fusion power was matched by adjusting the profile factors for density and temperature (alphan = 0.3, alphat = 0.6).
3. Plasma current was matched by adjusting the plasma safety factor (q = 2.13).
4. Beta was computed with input values of ion density , field on axis, and plasma temperature. The resulting value of 5.7% exceeded the Troyon limit of 5.2% using coefficient of 3.5 (also exceeded Fer value of 5.3%).
5. The FER TF stress value is 87 ksi based on Von Mises. Code value is 81 ksi based on Tresca. The present stress limit used in the systems code is 67 ksi, but this value is subject to material and life considerations for the TF coil.
6. The bucking cylinder compression stress exceeds yield strength by factor of ~ 1.9. Yield limit may be in question.

BENCHMARK OF FER/ACS

Case	FER ACS	FER Benchmark
R_o (m)	4.42	4.42
a (m)	1.25	1.25
A	3.54	3.54
B_t (T)	4.61	4.61
B_{max} (T)	12.0 (Limit)	10.2 (Actual)
I (MA)	8.74	8.76
P-DT (MW)	406	420
W/L (MW/m^2)	1.0	0.93
β (%)	5.3	5.7
T_e (keV)	12	12
n_e ($E14cm^{-3}$)	1.03	1.01
J_{TF}/WP (A/cm^2)	3300	6650
J_{TF}/OA (A/cm^2)	1060	1352
J_{OH}/WP (A/cm^2)	--	1437
J_{OH}/OA (A/cm^2)	--	1320
Bore (cm)	0.87	0.87
OH (cm)	0.31	0.31
BC (cm)	0.23	0.23
TF (cm)	0.68	0.68
Shield + FW (cm)	0.75	0.75
S/O-I (cm)	20	20
S/O-O (cm)	10	10
Total V-s required (V-s)	50	51

NATIONAL CONDUCTOR DESIGNS FOR INTOR

a. USA

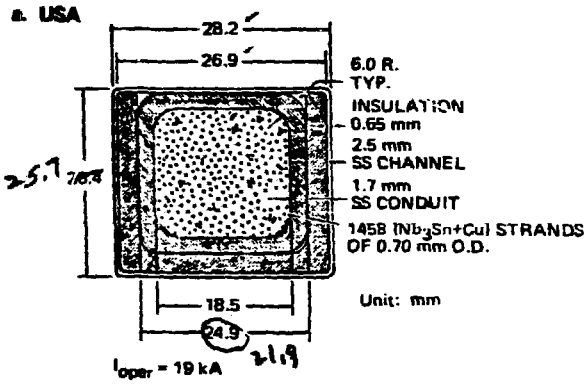

I_{oper} = 19 kA
I_c = 31 kA (12T, 4.2K) [4]

c. USSR

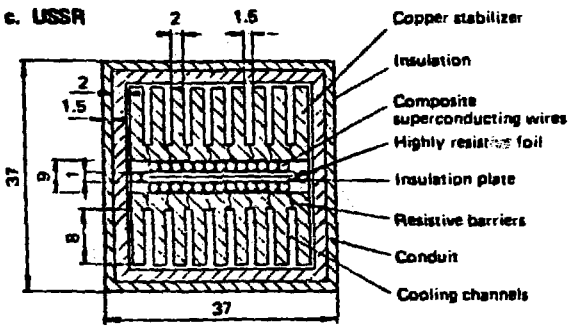

I_{oper} = 25 kA
I_c = 45 kA (12T, 4.2K) [6]

b. Japan

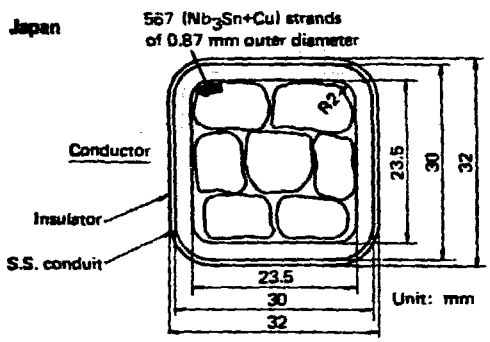

I_{oper} = 294 kA
I_c = 60 kA (12T, 4.2K) [5]

d. EC

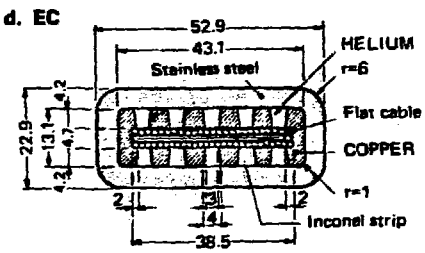

I_{oper} = 25 kA
I_c = 55 kA (12T, 4.2K) [4]