FUSION ENGINEERING DESIGN CENTER

CONF-871007--71-Vugraphs

DISCLAIMER

This report was prepared as an account of work sponsored by an agency of the United States Government. Neither the United States Government nor any agency thereof, nor any of their employees, makes any warranty, express or implied, or assumes any legal liability or responsibility for the accuracy, completeness, or usefulness of any information, apparatus, product, or process disclosed, or represents that its use would not infringe privately owned rights. Reference herein to any specific commercial product, process, or service by trade name, trademark, manufacturer, or otherwise does not necessarily constitute or imply its endorsement, recommendation, or favoring by the United States Government or any agency thereof. The views and opinions of authors expressed herein do not necessarily state or reflect those of the United States Government or any agency thereof.

THE CONFIGURATION DEVELOPMENT OF THE COMPACT IGNITION TOKAMAK (CIT) DEVICE

CONF-871007--71-Vugraphs

DE88 002619

T. G. BROWN

PRESENTED AT

THE 12TH SYMPOSIUM ON FUSION ENGINEERING

MONTEREY, CALIFORNIA

OCTOBER 12-16, 1987

*Research sponsored by the Office of Fusion Energy, U.S. Department of Energy, under contract DE-AC05-84OR21400 with Martin Marietta Energy Systems, Incorporated.

MASTER

DISTRIBUTION OF THIS DOCUMENT IS UNLIMITED

TOPICS TO BE COVERED

- DESIGN OPTIONS CONSIDERED IN THE DEVELOPMENT OF CIT
- OVERVIEW OF THE CIT BASELING CONFIGURATION
- SUMMARY

IGNITION STUDIES DESIGN OPTIONS

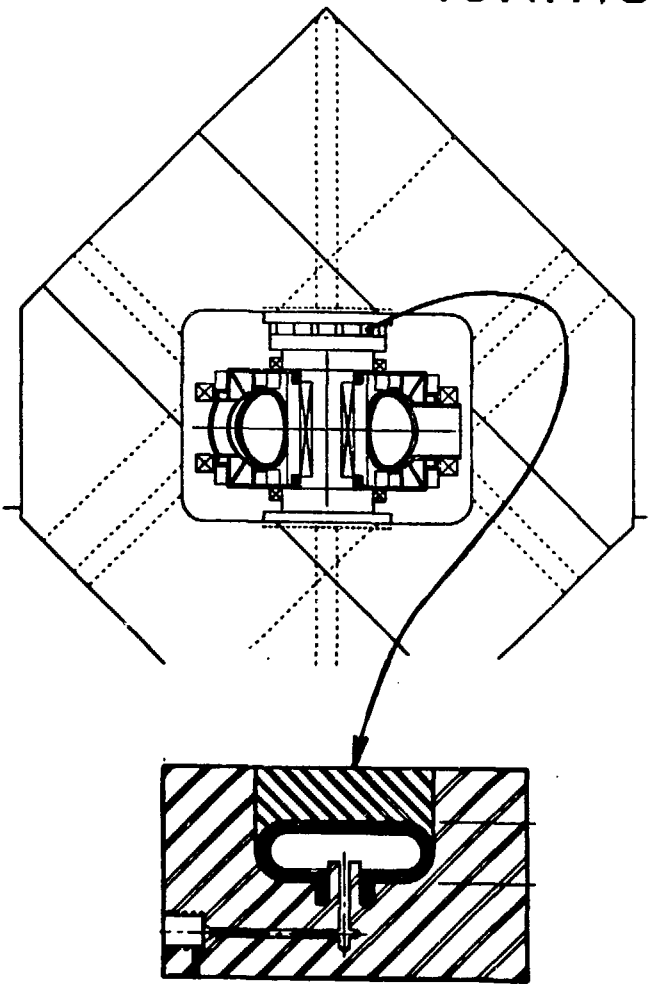

IGNIFED
(Hydraulic Preload)

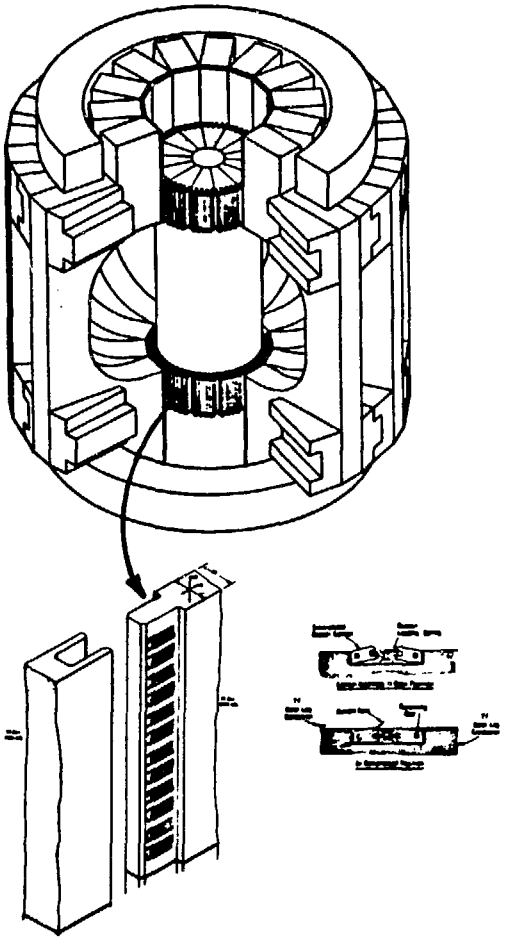

ISP0424
(Sliding Joints)

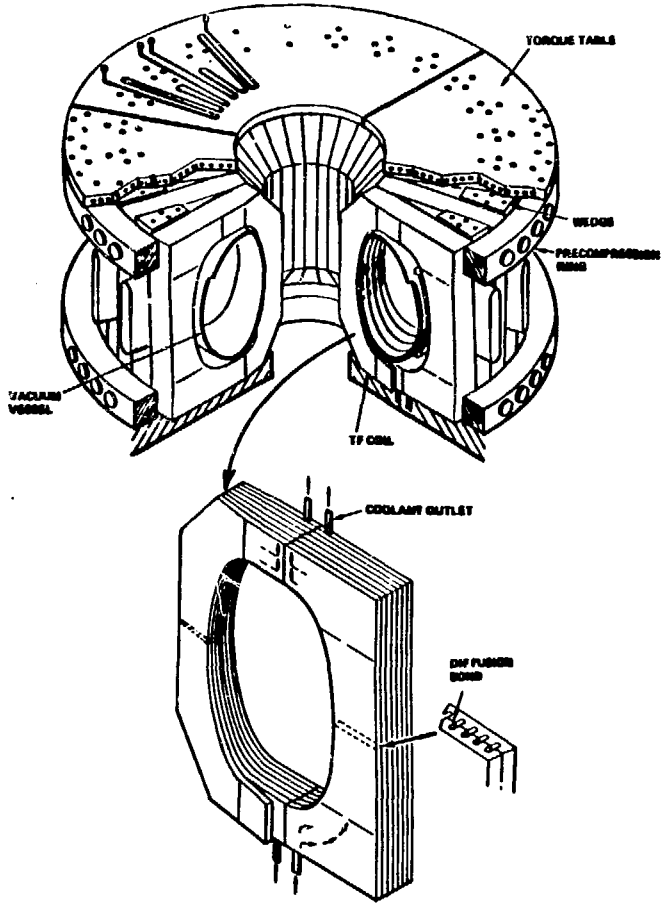

LITE
(Cu Inconel)

AN IGLOO SHIELD WAS DESIGNED TO MINIMIZE PENETRATIONS THROUGH IT PLUS MAXIMIZE EASE OF GAINING ACCESS TO INTERNAL COMPONENTS

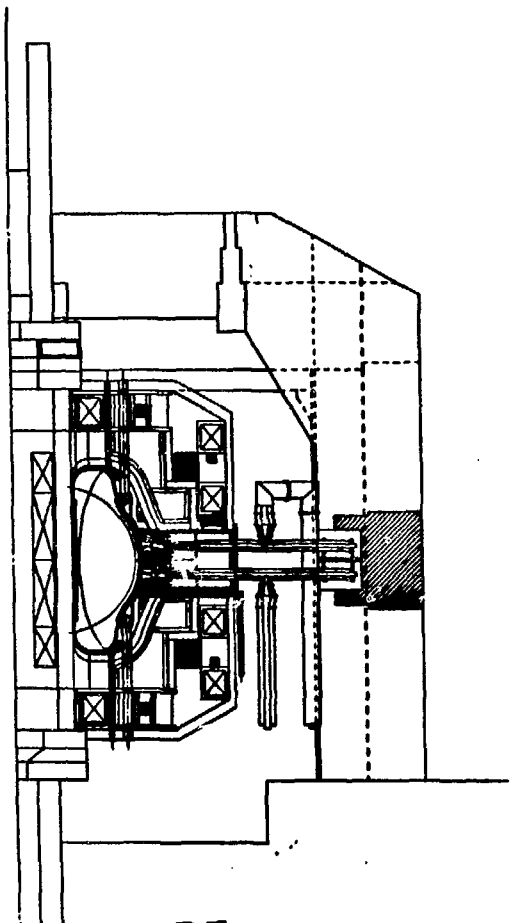

RF

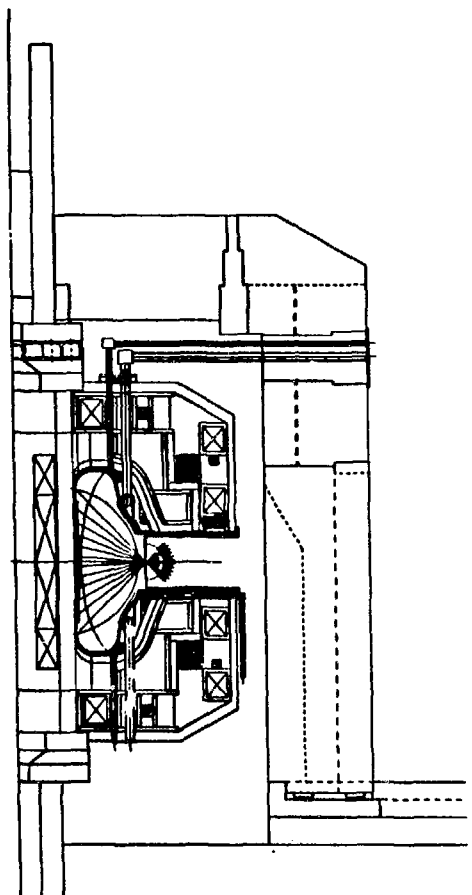

Diagnostic

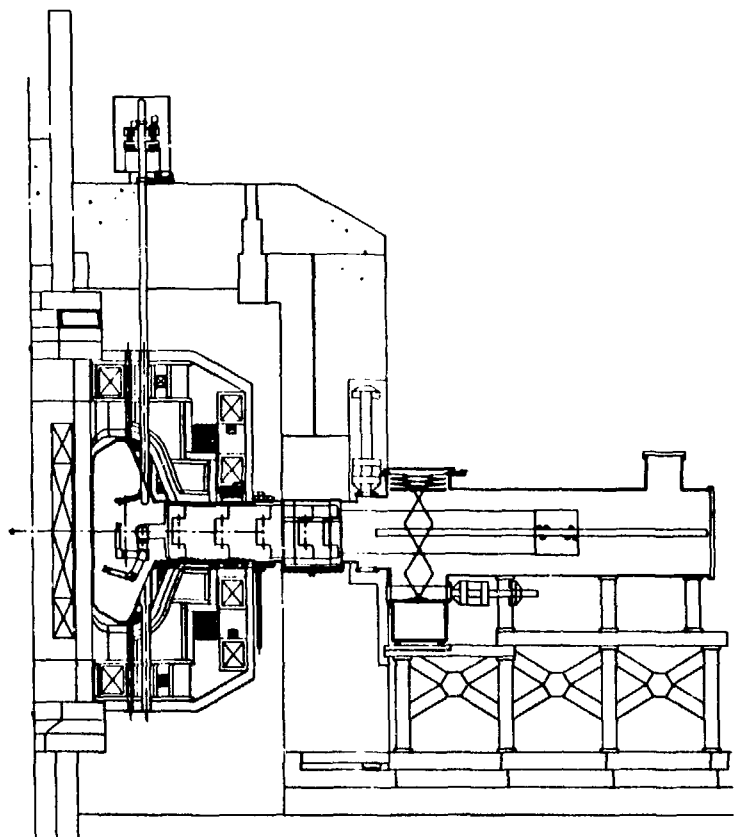

In–Vessel Maintenance

IGLOO SHIELD ARRANGEMENT

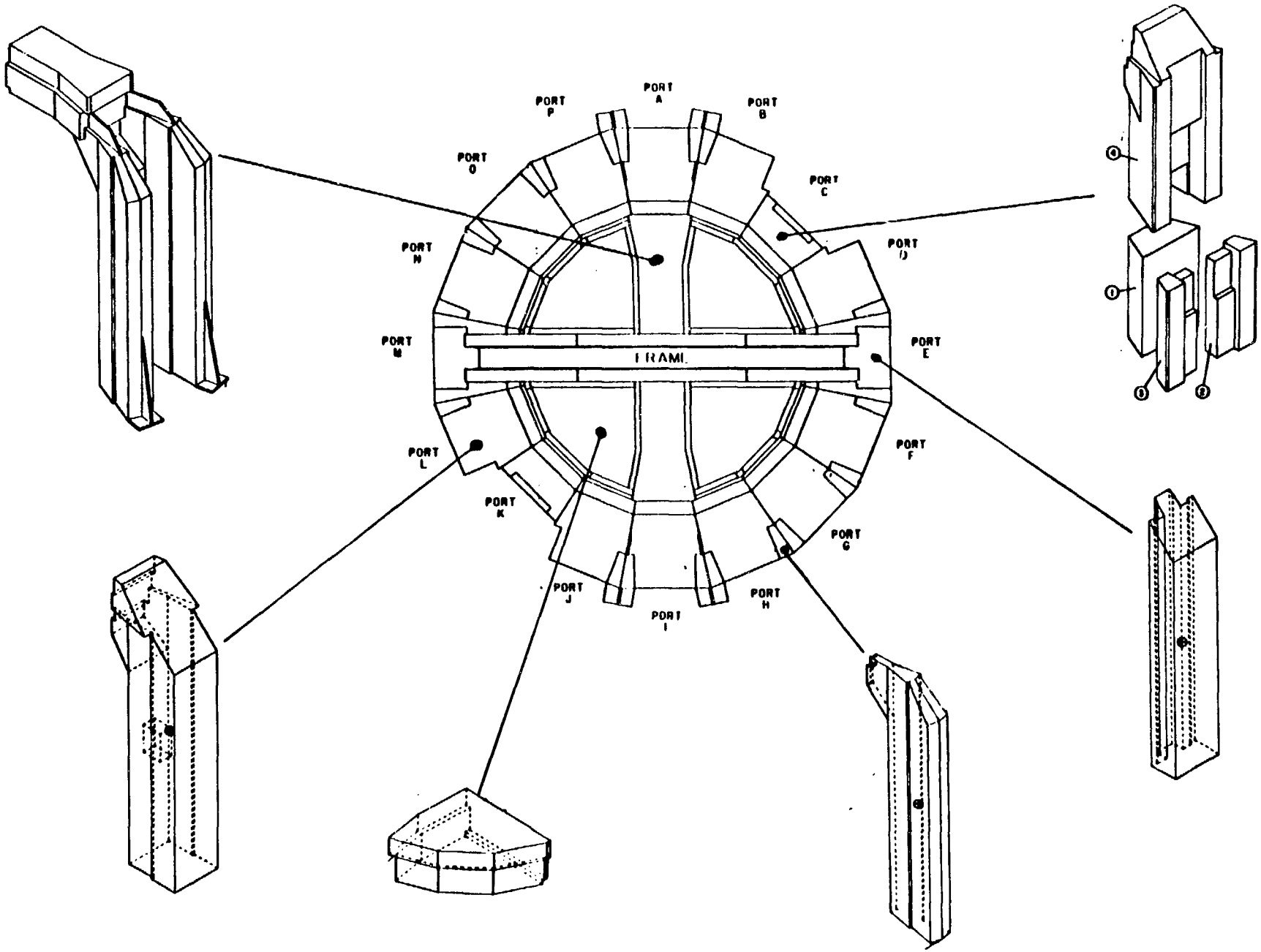

OTHER DESIGN OPTIONS WERE STUDIED

NonPress Option

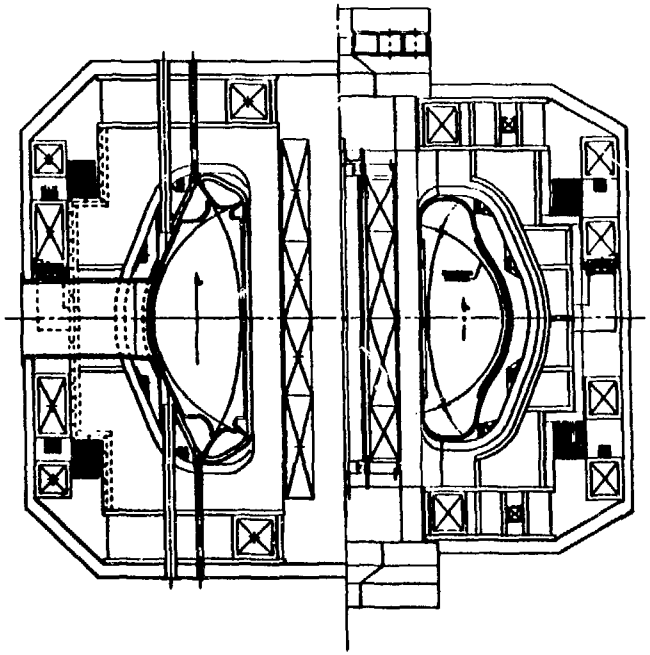

Internal PF Option

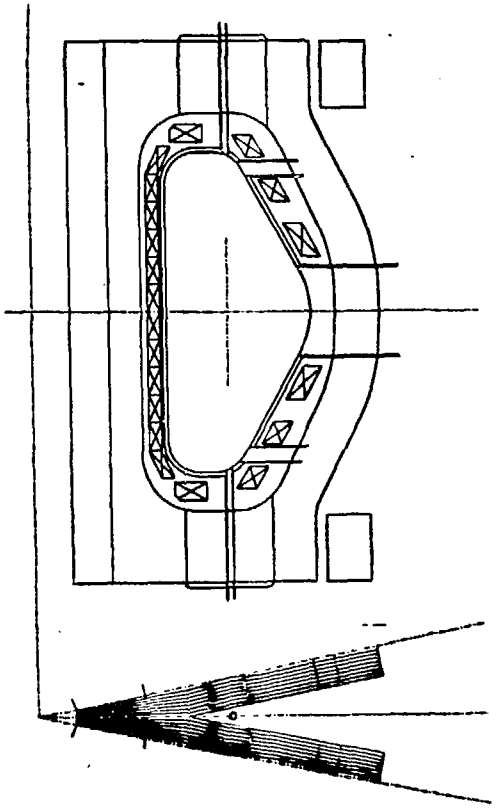

CIT HYDRAULIC PRESS DEVELOPMENT

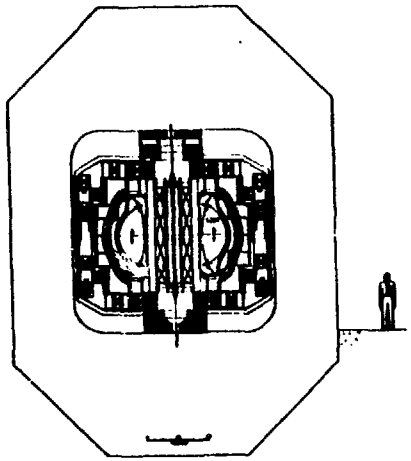

PICTURE FRAME
1.32 m RO
25,000 T PRESS

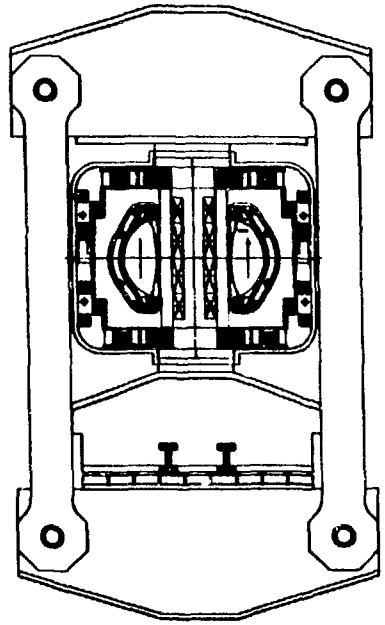

TENSION LINK
1.75 m RO
57,500 T PRESS

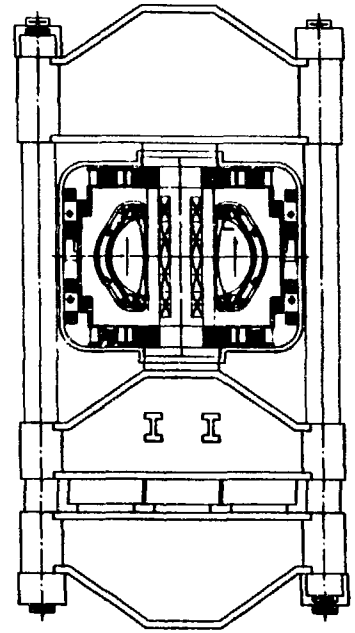

COLUMN & SLEEVE
1.75 m RO
25,000 T PRESS

CIT CONCEPTUAL DESIGN

FRONT VIEW

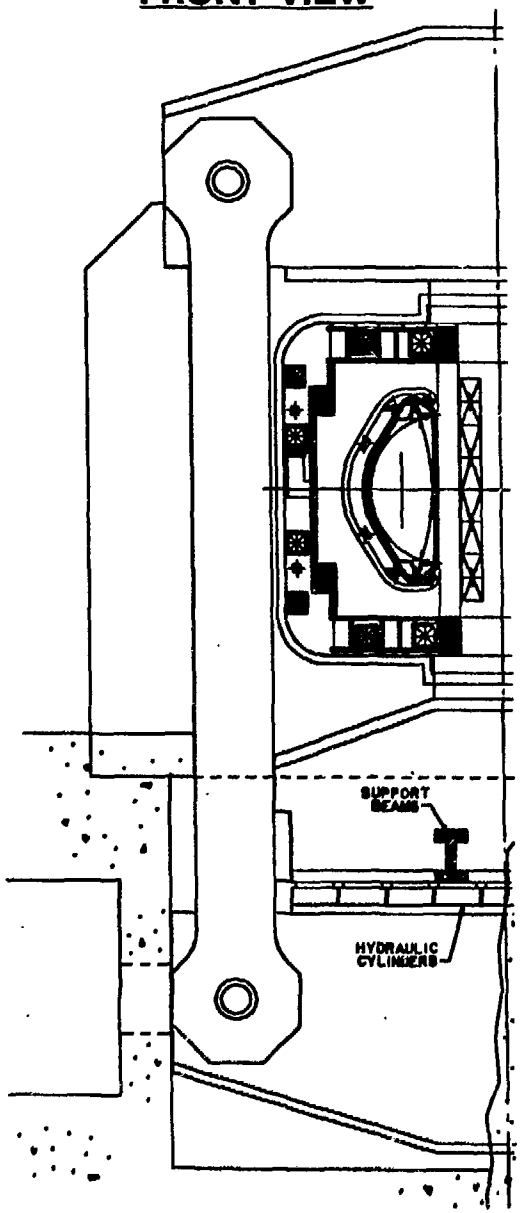

- o CU-INCONEL TF
- o HYDRAULIC PRELOAD

PARAMETERS

R_o	1.73 m
a	0.549 m
Elong	2.0/2.2
B_o	10/12 T
Beta	3.8/4.9%
Burn	5 s
RF	20 MW

SIDE VIEW

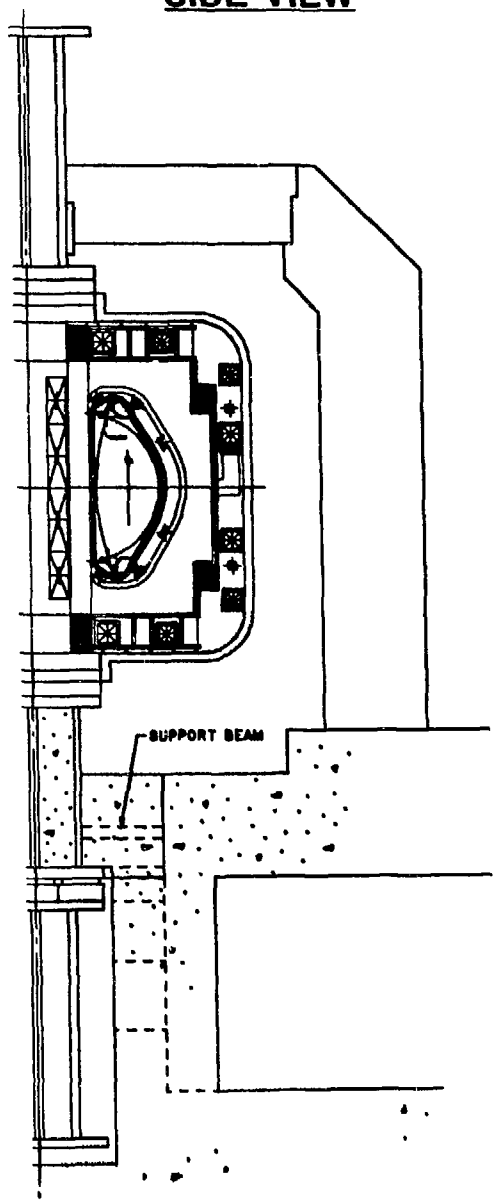

KEY CIT ENGINEERING DESIGN FEATURES INCLUDE:

- 18 HIGH STRENGTH CU-INCONEL TF COILS
- ALL EXTERNAL PF COILS WITH INTERNAL CONTROL COILS
- HIGH STRENGTH CU-INCONEL OH SOLENOID
- INERTIALLY-COOLED LN_2 TF AND PF SYSTEM
- CONFIGURATION ALLOWS INCORPORATION OF A 52,000 METRIC TON PRELOAD SYSTEM
- CLOSE-IN IGLOO SHIELD USED TO MINIMIZE AIR ACTIVATION
- IN-VESSEL, VACUUM RATED, REMOTE MAINTENANCE SYSTEM
- OVERALL DEVICE CONFIGURATION DESIGNED FOR REMOTE MAINTENANCE OF DIAGNOSTIC AND PERIPHERAL EQUIPMENT

CIT DEVICE CORE

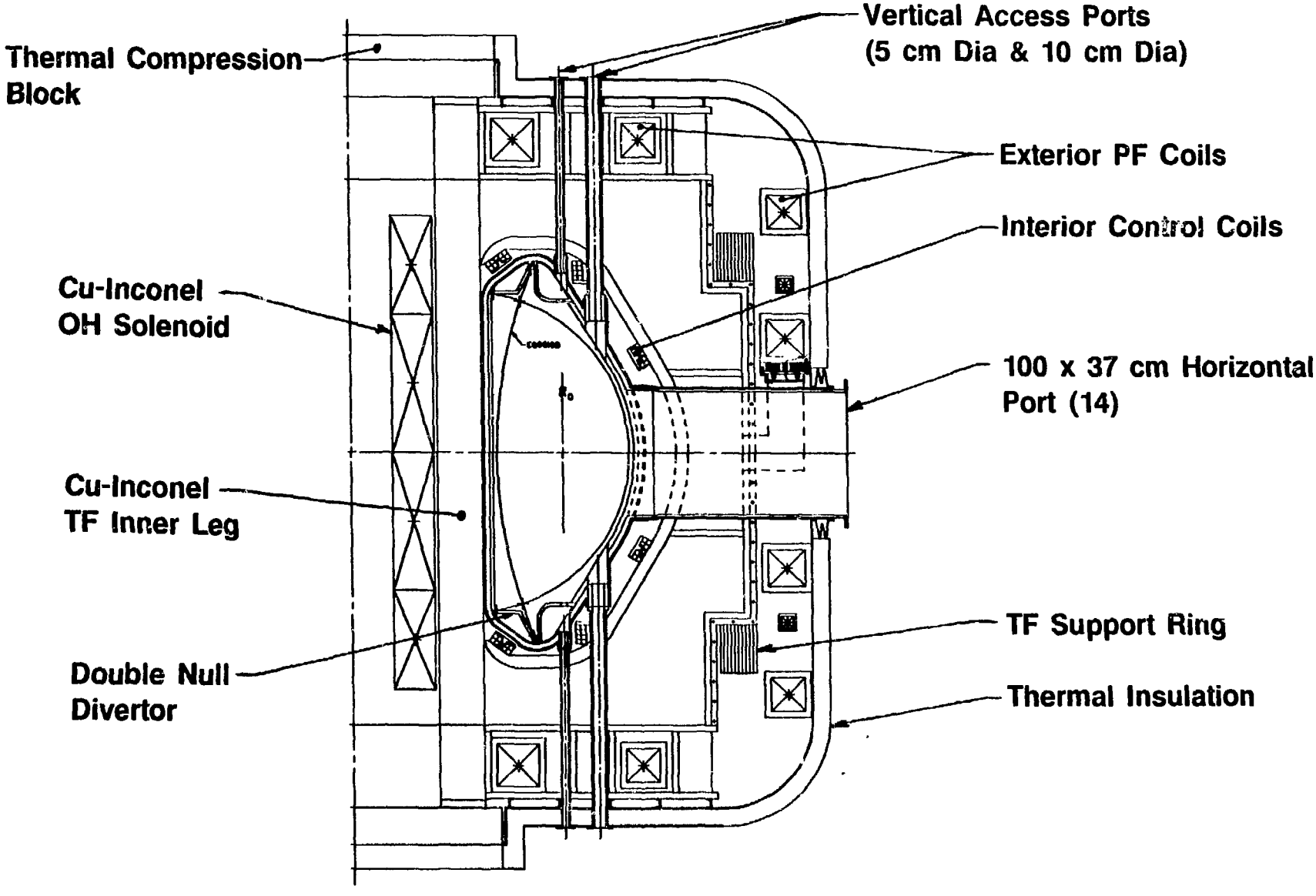

TF ASSEMBLY

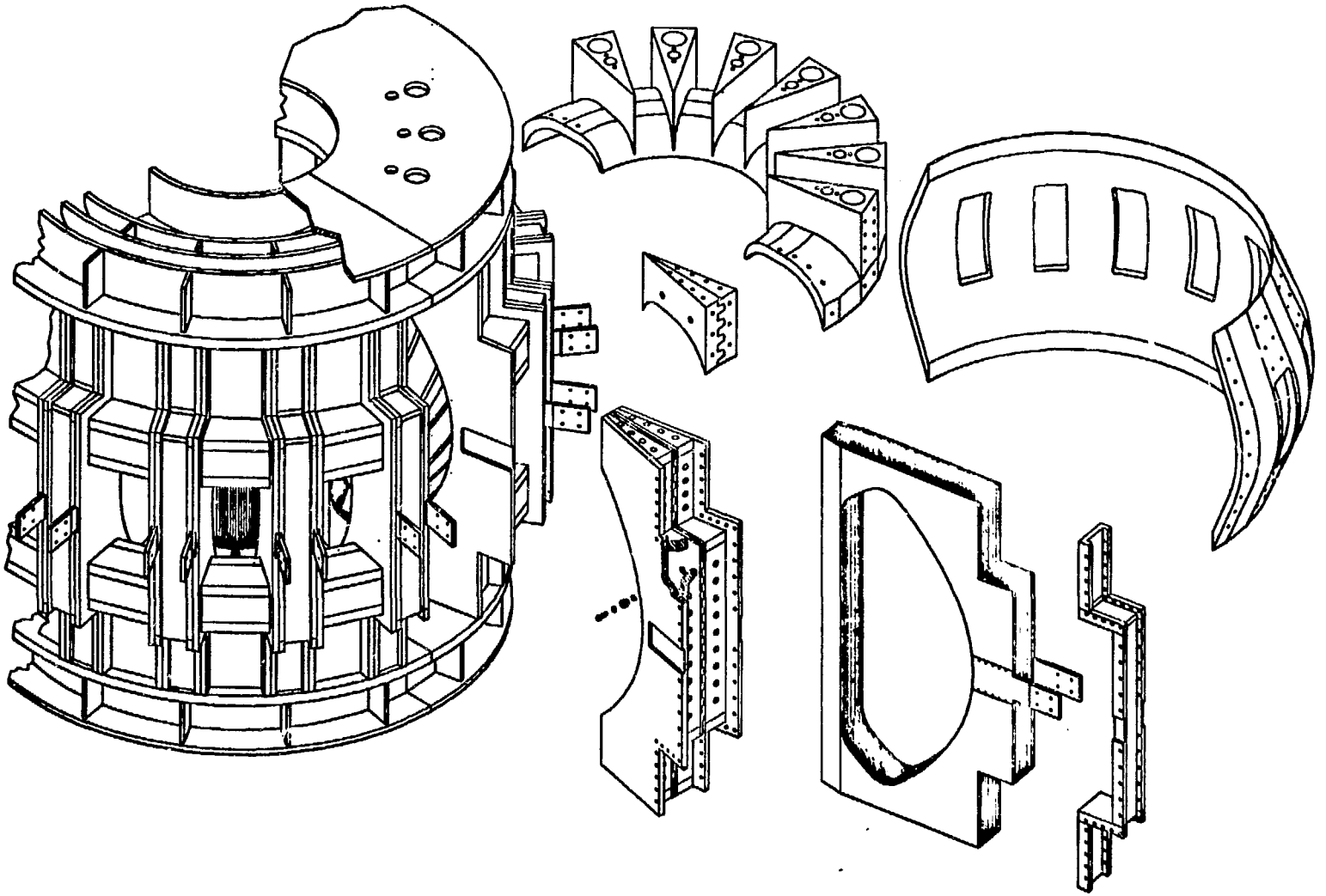

PRELOAD SYSTEM

- THE PRELOAD STRUCTURE IS DESIGNED TO SUPPORT A VERTICAL PRELOAD ON THE TF INNER LEG CONSISTING OF:

  52,000 METRIC TONS
  241 MPa ON TF INNER LEG

- THE PRELOAD STRUCTURE CONSISTS OF THICK PLATE, BUILT-UP I-BEAMS

- A HYDRAULIC SYSTEM, WITH MULTIPLE HYDRAULIC CYLINDERS OPERATING AT 55 MPa DEVELOPS THE PRELOAD

CIT FRONT ELEVATION VIEW

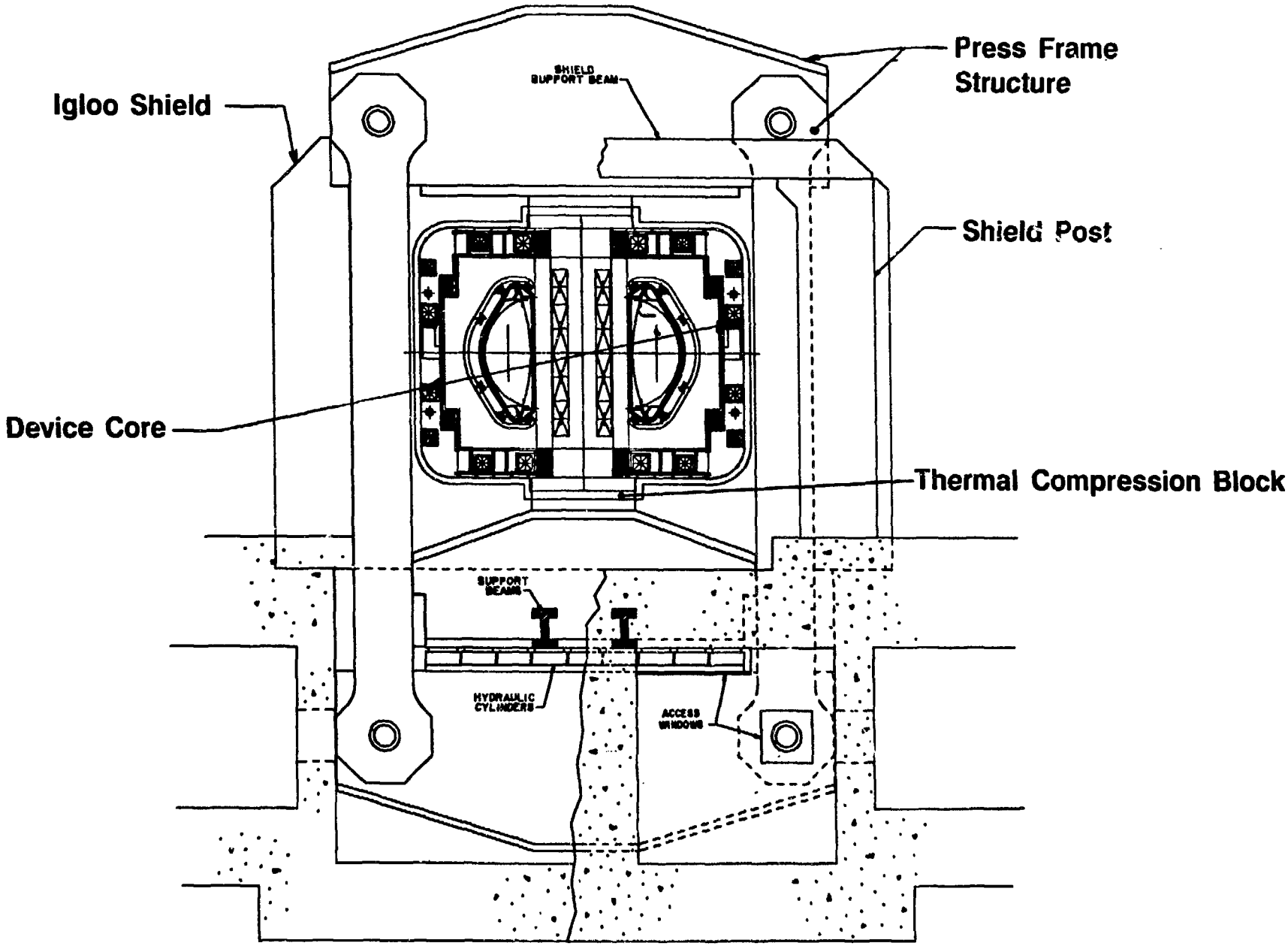

CIT SIDE ELEVATION VIEW

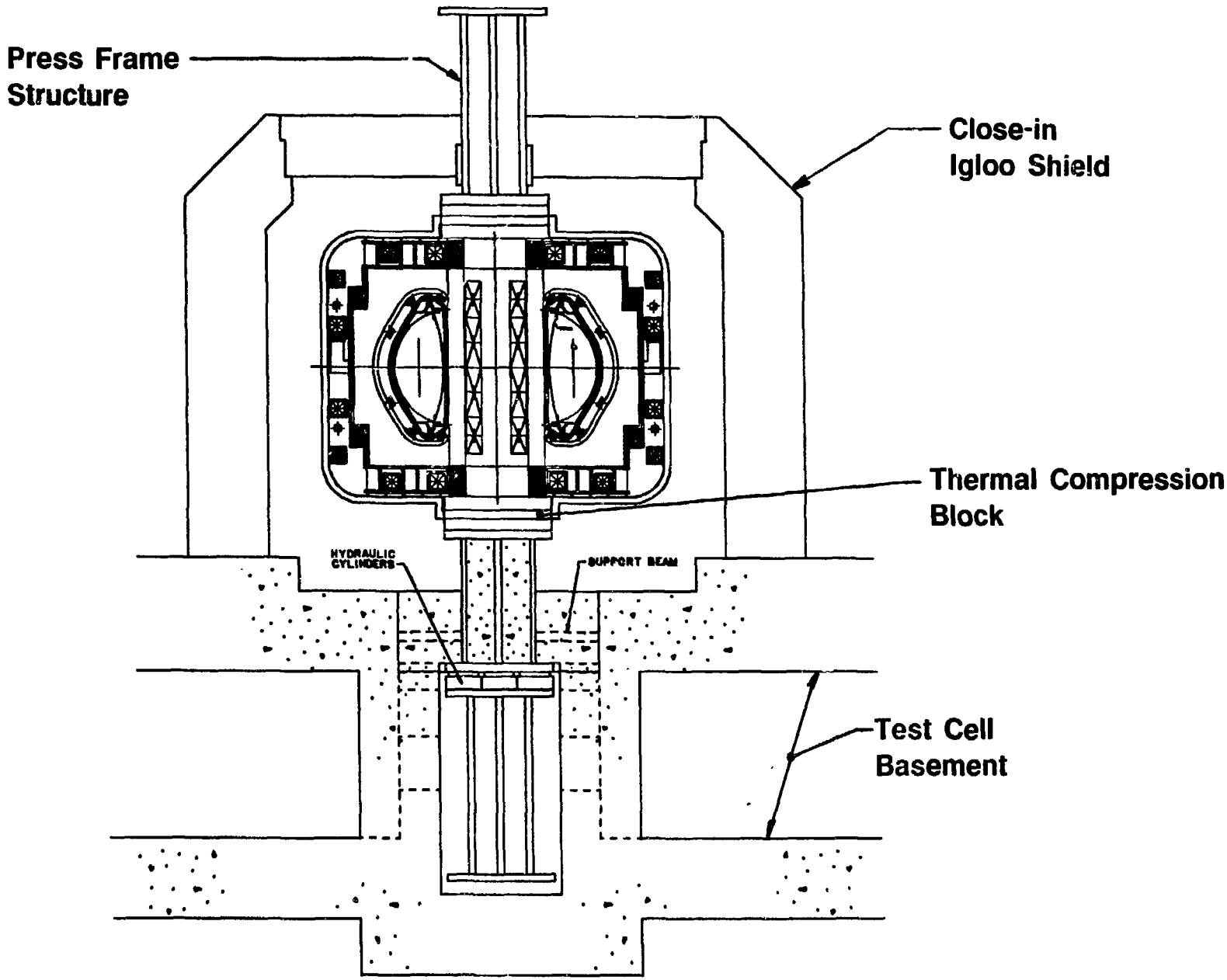

THE MAJORITY OF DIAGNOSTIC/MACHINE INTERFACES OCCUR INSIDE THE IGLOO SHIELD

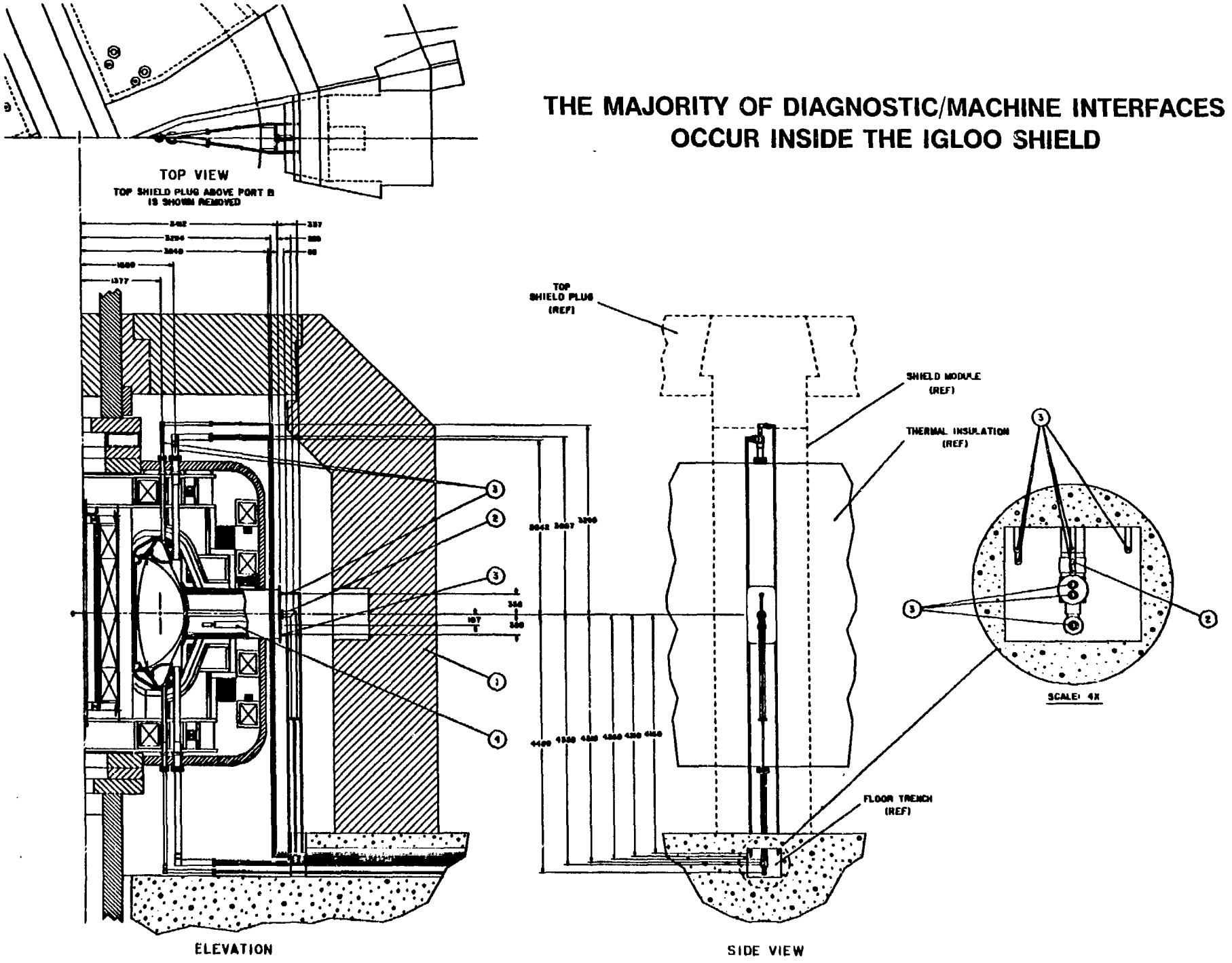

IN-VESSEL REMOTE MAINTENANCE SYSTEM

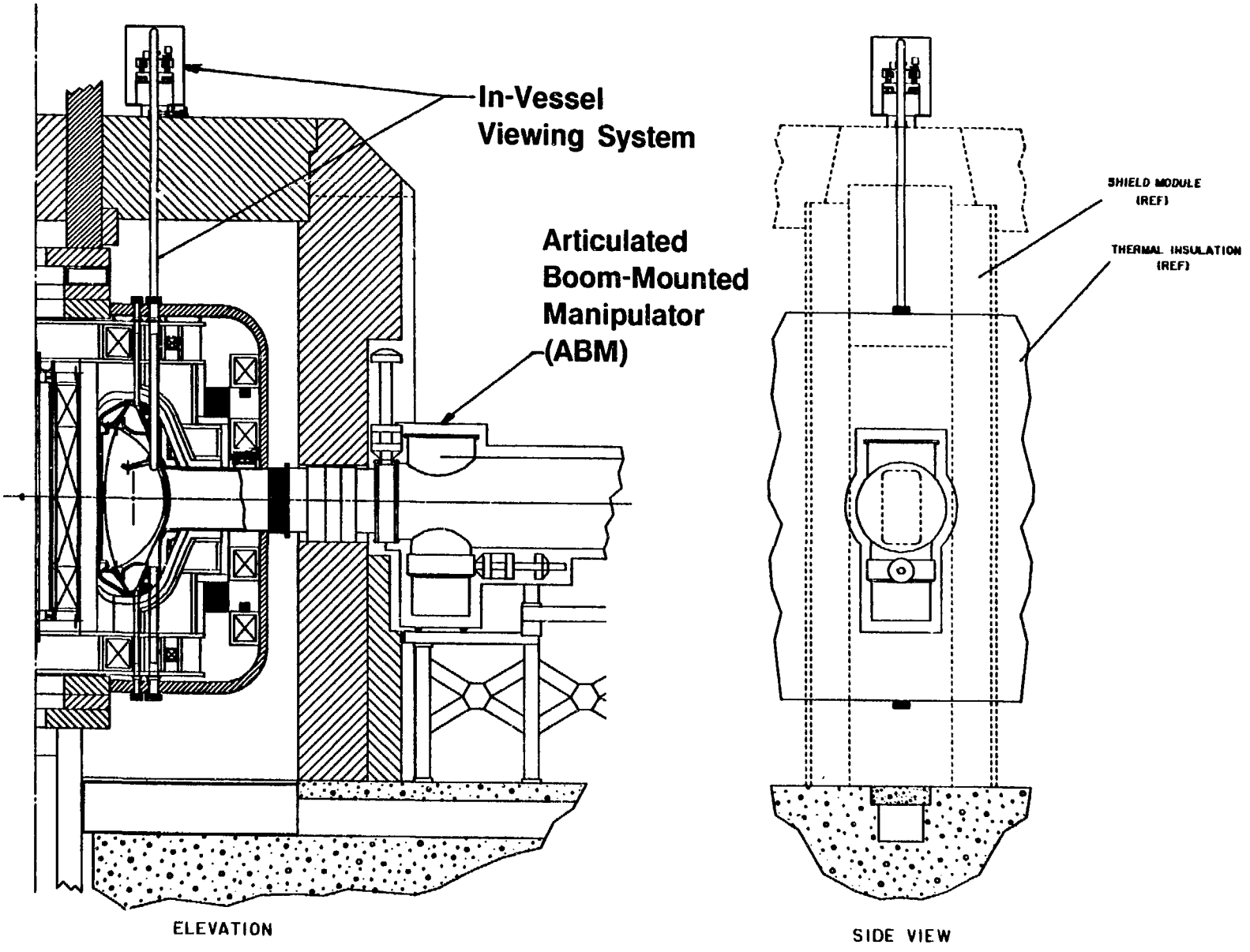

PLAN VIEW OF DEVICE/TEST CELL

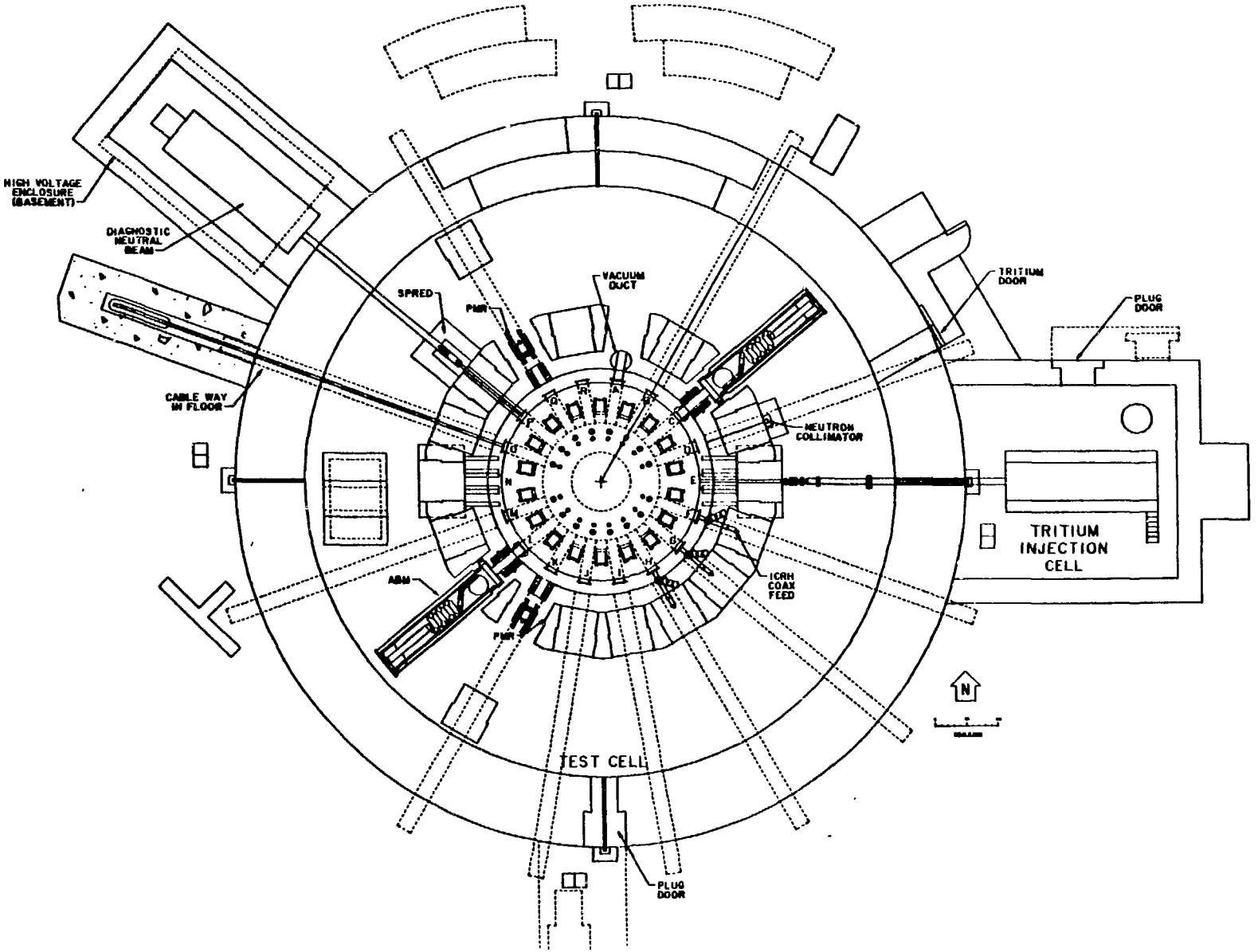

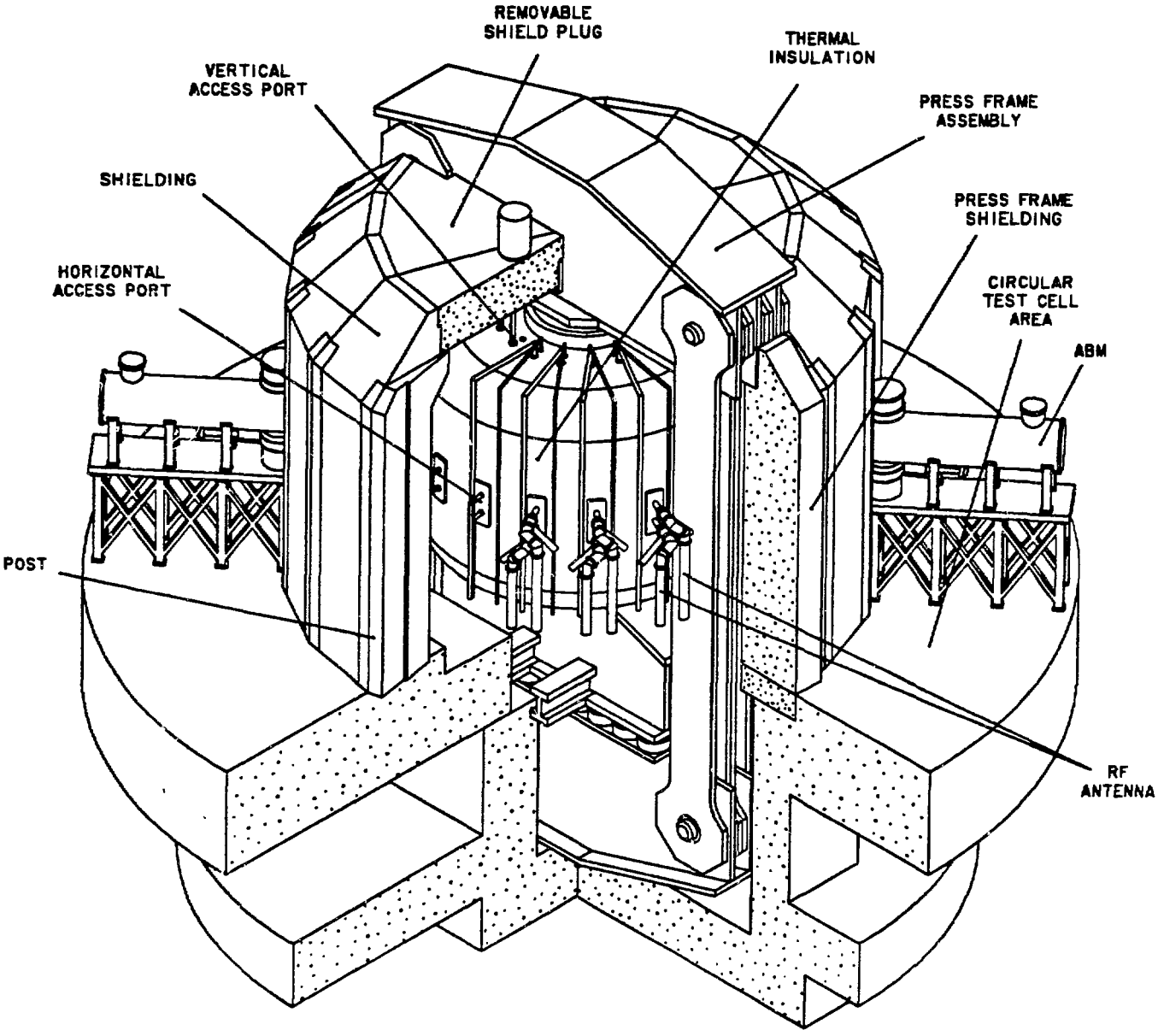
REMOVABLE
SHIELD PLUG
THERMAL
INSULATION
VERTICAL
ACCESS PORT
PRESS FRAME
ASSEMBLY
SHIELDING
PRESS FRAME
SHIELDING
HORIZONTAL
ACCESS PORT
CIRCULAR
TEST CELL
AREA
ABM
POST
RF
ANTENNA

CIT DEVICE

SUMMARY

- A CIT DEVICE CONFIGURATION HAS BEEN ESTABLISHED WHICH MEETS PHYSICS REQUIREMENTS, PERFORMANCE MARGINS AND ENGINEERING COMPONENT DESIGN NEEDS
- THE BASELINE (R_O=1.75 m) MACHINE APPEARS REASONABLE BASED ON THE ANALYSIS PERFORMED TO DATE...MORE ANALYSIS REMAINS TO BE DONE