MASTER

CONF-830406--92

DE83 014237

By acceptance of this article, the publisher or recipient acknowledges the U.S. Government's right to retain a nonexclusive, royalty-free license in and to any copyright covering the article.

DESIRABLE ENGINEERING FEATURES OF THE NEXT-GENERATION TOKAMAK DEVICE*

T. G. Brown
Fusion Engineering Design Center/Grumman Aerospace Corporation
Post Office Box Y, FEDC Building
Oak Ridge, Tennessee 37830
(615)576-5480

C. A. Flanagan
Fusion Engineering Design Center/Westinghouse Electric Corporation
Post Office Box Y, FEDC Building
Oak Ridge, Tennessee 37830
(615)576-5503

ABSTRACT

The early tokamak reactor configuration was developed as a means to identify engineering and technology problems and, if possible, suggest resolutions. The power reactor was depicted as a large device with many superconducting toroidal field (TF) coils and many distributed internal and external poloidal field (PF) coils. The mechanical configuration dictated a complicated maintenance approach. Access to the plasma chamber was limited.

Particular attention has been paid, in recent reactor studies,[1-3] to incorporate attractive, cost-effective engineering features to minimize the device complexity and satisfy the assembly and maintenance requirements of the various reactor components. This has been accomplished without degrading the physics operating parameters of the reactor. In the design process, a number of desirable engineering features have been identified that, when incorporated, make the tokamak a much more attractive reactor candidate.

Recent scoping studies examined a series of superconducting, long-pulse Driven Current Tokamak (DCT) devices. One class of options is an ignited, D-T burning device designated DCT-8. It was concluded that the DCT-8 is a most attractive engineering option to adequately bridge the gap between the Tokamak Fusion Test Reactor (TFTR) and the Engineering Test Reactor (ETR).

INTRODUCTION

Since the early UWMAK designs,[4-6] reactor studies have resulted in a dramatic decrease in the overall size of the tokamak. In addition, the approach to the configuration arrangement developed over the last several years has received relatively widespread consensus among design engineers. The early reactor scoping studies tended toward large devices with the torus vacuum chamber and associated toroidal and poloidal field magnets all interlocked. In the U.S. since 1976, a number of reactor and intermediate device design studies have been performed. Early in this period, three parallel studies[7-9] were performed on an Experimental Power Reactor (EPR), which was envisioned as a device to follow TFTR and produce significant quantities of D-T fusion power. The Next Step (TNS) reactor studies followed the EPR studies.

The EPR and TNS devices, (Figs. 1 and 2) illustrate the tokamak configuration as defined in these early designs. Many internal and external poloidal field (PF) coils were integrated within the toroidal field (TF) coil system to provide the plasma shaping and control requirements. The PF coils encircled the plasma torus in the EPR design; this resulted in very limited access to the torus vacuum chamber and the plasma. Greater plasma access was provided in the TNS design by locating all the PF coils away from the horizontal midplane region. However, in both designs, replacement of the PF and TF coils was very difficult. Maintenance of the lower PF coils was further complicated by the machine gravity support system, since the primary support columns were located at the center of the device. This arrangement "trapped" the lower PF coils around this support structure. In these early studies, the vacuum boundary location and design, the TF and PF coil structural support systems, the start-up approach, the plasma heating systems, and the impurity control approach were all in an early conceptual development stage; only now are the design features of these systems and components beginning to mature. This emergence has influenced the development of the present tokamak configuration. The TNS and EPR reactor studies, therefore, represented a very valuable starting point from which the more recent and detailed follow-on tokamak reactor studies (FED, INTOR, DEMO, STARFIRE) have evolved. In these studies, a significant goal has been to develop a reactor concept with engineering features that minimize

*Research sponsored by the Office of Fusion Energy, U.S. Department of Energy, under contract W-7405-eng-26 with Union Carbide Corporation.

NOTICE
PORTIONS OF THIS REPORT ARE ILLEGIBLE.
It has been reproduced from the best available copy to permit the broadest possible availability.

DISTRIBUTION OF THIS DOCUMENT IS UNLIMITED

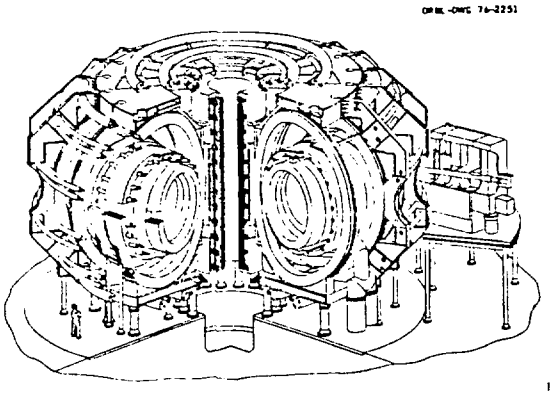

Fig. 1. ORNL EPR reference design.

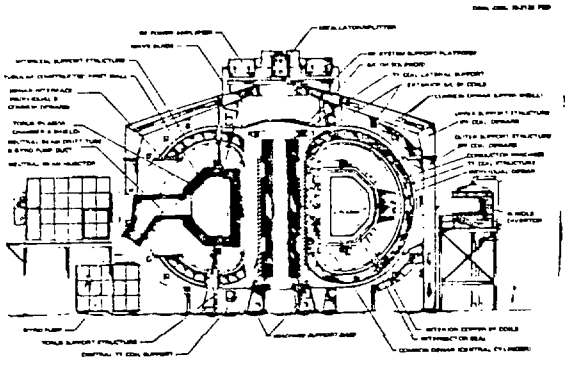

Fig. 2. ORNL TNS device.

the device complexity and still satisfy all assembly and maintenance requirements. For the ultimate reactor, these features not only must be feasible from an engineering standpoint but also must permit operation at high levels of availability and result in a cost-effective product.

CONFIGURATION DESIGN PRINCIPLES

To provide for practical assembly and maintenance, a number of principles have evolved from the early reactor studies that have significantly influenced the current tokamak configuration. The first is that of accessibility; all systems and subsystems must be designed so that easy access is provided to the device and to each major system within the device. A second guiding principle is the concept of modularity; the major systems and components of the device are assembled from modular pieces. Together, these two items — accessibility and modularity — can lead to design approaches for the tokamak that provide the practical capability to service and repair all systems and components. In the design process, it is essential that important trade-off studies are performed. Although it is now widely recognized that the tokamak configuration must be designed from the outset to be maintained, it is also equally important that all of the many key systems be designed as integrated pieces of the total reactor. The systems integration aspect of the design cannot be overlooked. There are a few key systems that dominate the tokamak configuration, as indicated in Table 1. It is primarily these systems that must be designed for practical maintenance.

Table 1. Key systems that dominate tokamak configuration designs

TF coils
PF coils
Magnet systems structure
Torus structure
Vacuum systems
Impurity control systems

A third principle is the desirability of providing hands-on maintenance capability at the outside of the device within a day following shutdown. Hands-on maintenance capability at the shield boundary is presently provided by designing the shielding to limit the dose rate to 2.5 mrem/h approximately one day after shutdown. These contact operations are valuable for visual inspections, trouble shooting, equipment setup and calibration, minor repairs, and supervision of equipment installation or modifications.

DESIRABLE ENGINEERING FEATURES

In designing the tokamak configuration to achieve the desired goal and satisfy the preceding principles, the key systems of Table 1 dominate the design and have received considerable design emphasis in recent tokamak reactor studies. A comparison of the configuration features from a number of recent fusion reactor studies performed by many different design teams (including international contributions through INTOR) suggest a number of desirable engineering features. These desirable features represent the present best tokamak design configuration, not only for a power reactor, but also for the next-generation tokamak.

- The design should employ a few (8-12) large, superconducting TF coils. The proper combination of number and size provides for sufficient access to the torus and torus components and at the same time satisfies the plasma edge ripple requirement. The gravity support for the TF system should be located at the outboard region of the coils.

- The PF coil system should comprise few coils, with as many as practical located external to the TF coils. An access tunnel should be located underneath the center of the device to allow access space to maintain the lower inboard PF coils. The lower outboard PF coil(s) should be able to be removed vertically, around the outside of the reactor device.

- The torus should be composed of modular sectors insertable between the outboard legs of the TF coils. If possible, the number of sectors that make up the torus should equal the number of TF coils. Motion to insert or remove sectors should be simple linear radial motion.

- The servicing access should be located at the horizontal midplane. This provides maximum facility for maintenance but requires PF coils to be located toward the outboard top and bottom of the device.

- The intercoil structure for the magnet systems must be designed to react all of the imposed loads and still provide open space between the outboard legs of the TF coils to gain access to the torus.

- Adequate shielding must be provided to establish capability for hands-on maintenance; at the same time fully remote maintenance must be possible if needed.

- Separate structural systems should be provided for the cold and warm components.

- A single combined vacuum boundary should be provided between the plasma chamber and the superconducting magnet systems. This permits a significant reduction in the radial build (~15 cm) and reduces the number of plasma chamber and magnet cryostat parts.

- The plasma chamber vacuum closure should be located outboard of the device torus.

- The torus vacuum duct system should extend beneath the plasma chamber and should act as the gravity support structure for the torus plasma chamber.

The latest tokamak designs (FED/ INTOR) incorporate these design features (see Fig. 3). In this design, the entire blanket and first wall, together with essentially all of the bulk shield, can be removed by individual extraction of each torus sector using simple linear, radial motion. Each torus sector is designed to be

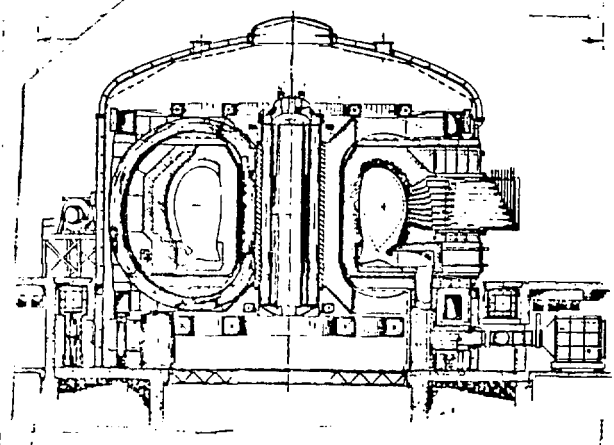

Fig. 3. FED/INTOR reactor design.

highly modular with plug-in auxiliaries, such as heating, testing, and impurity control (Fig. 4). The PF coils are located to permit removal for maintenance by simple vertical motion. The TF coils can each be removed for repair or replacement, if necessary. A TF coil is removed by removing the associated torus sectors, vertically removing the vessel dome and the upper PF coils, laterally moving the selected TF coil radially outward a small distance, then vertically lifting the TF coil out of the device (see Fig. 5). The preceding key features result in a much more feasible tokamak reactor concept than previously existed. However, the overall feasibility of these engineering features remains to be demonstrated by constructing and operating a device that incorporates them.

SCOPING STUDIES FOR NEXT-GENERATION TOKAMAK DEVICE

As part of recent studies (1982-1983) to explore options for the next-generation tokamak, a series of superconducting Driven Current Tokamak (DCT) devices has been examined in a scoping study performed by the Fusion Engineering Design Center (FEDC) and Princeton Plasma

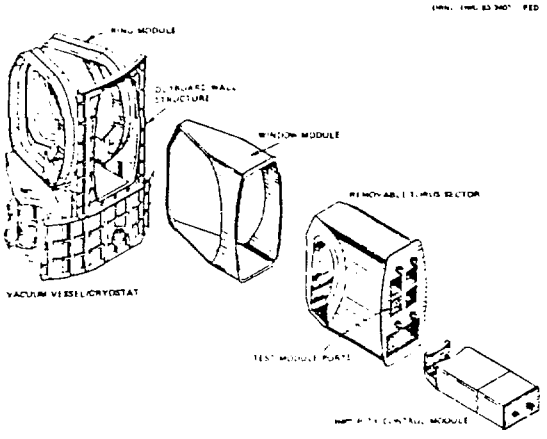

Fig. 4. Modular design approach greatly improves maintenance characteristics of the torus and shield.

Physics Laboratory (PPPL). This series of devices is illustrated in Fig. 6 and ranges from a PLT-size plasma device (denoted DCT-2) through an ignition-size D-T device (denoted DCT-8). The smallest device is distinguished by the choice of a TF coil size comparable to that of the Large Coil Test Facility. The largest device is about 70% the size of FED.

The DCT-2 device is designed solely for long-pulse hydrogen plasma operation and envisages no D-T plasma operation. As such, the role of DCT-2 in the fusion program is to develop the nonnuclear technology and physics required for ETR.

The DCT-8 is a D-T burning version of the DCT series. The distinctive feature of one option for DCT-8 is to use a hybrid superconducting-copper TF coil system, which facilitates high field, high-performance operation with reduced size and cost. The objectives for this device combine the long-pulse objectives of a superconducting tokamak with the nuclear

ORNL-DWG 87-4193 FED

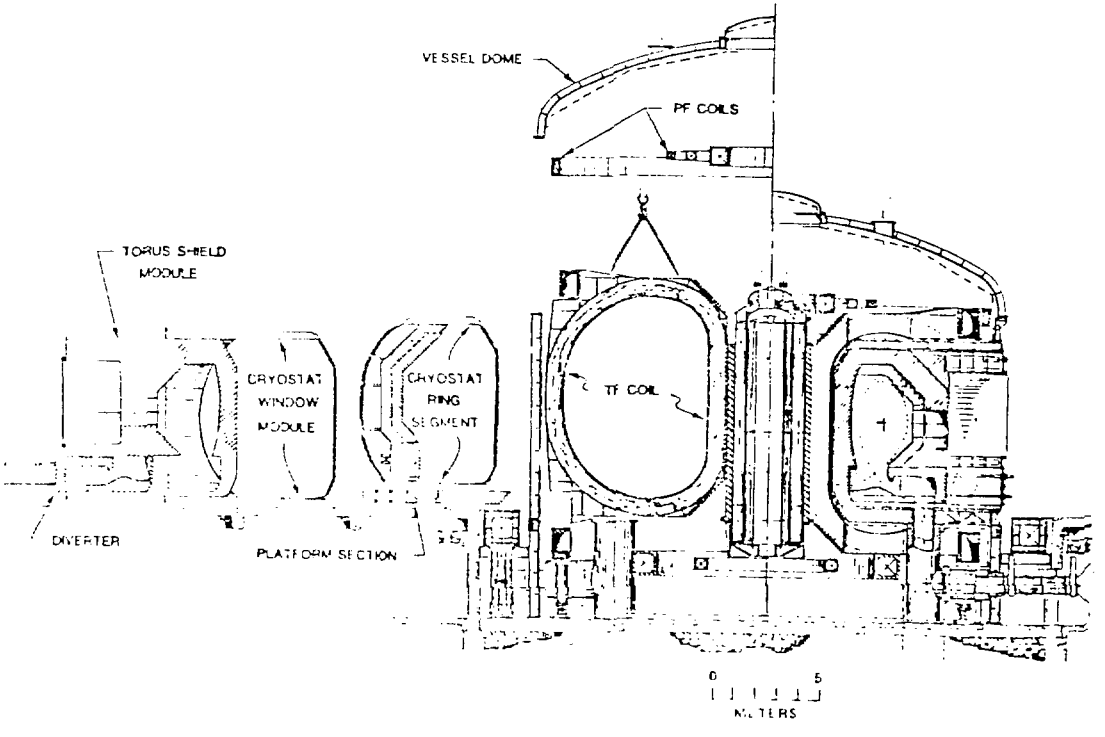

Fig. 5. A maintenance scheme has been identified for all components.

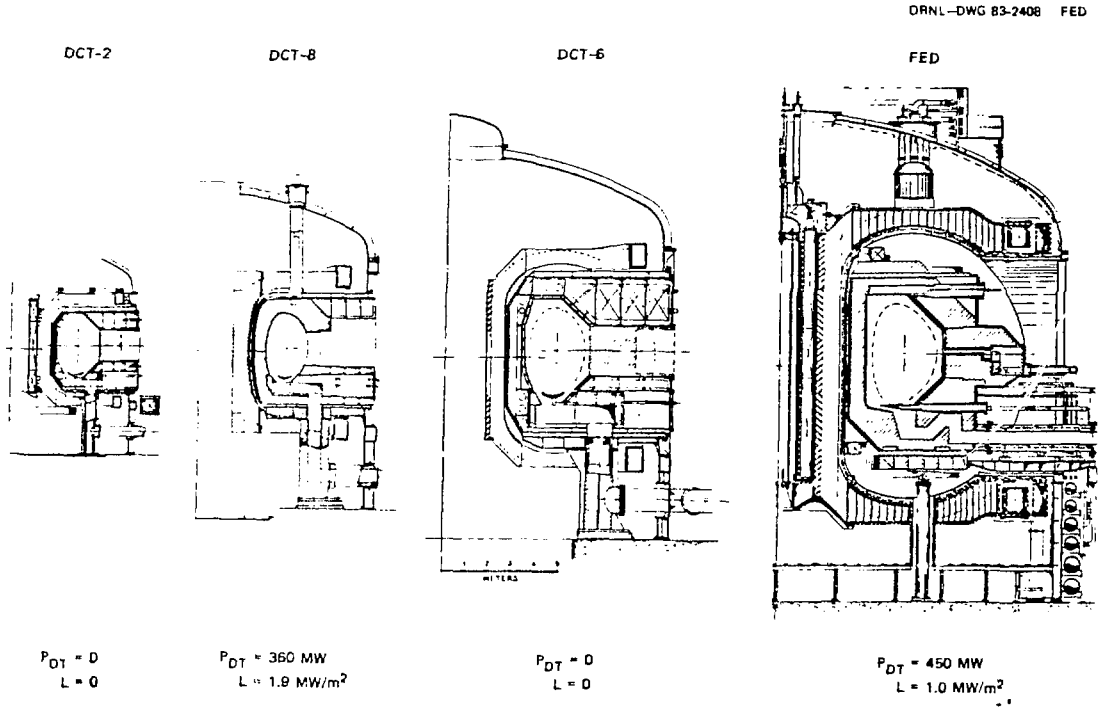

Fig. 6. Scoping studies for a DCT have examined a range of devices.

technology and physics objectives of a D-T burning experiment. The TFTR site is suitable for such a device. Although many of the TFTR resources could be used in a device such as DCT-8, the scale of the device makes use of the existing test cell unlikely.

The major device parameters for the DCT-2 and DCT-8 are listed in Table 2. These parameters are representative of only one design point in the available design space for each device; trade-offs in many of these parameters typically occur during the preconceptual design to identify the cost/performance sensitivities and thereby permit interaction to a final set of parameters.

ABILITY TO SATISFY PHYSICS AND ENGINEERING NEEDS FOR ETR

Figure 7 represents a graphic comparison of the ability of options such as DCT-2 and DCT-8 to satisfy the perceived major physics and technology needs that remain to be addressed before construction of an ETR. This listing has evolved out of the FED/INTOR/DEMO/STARFIRE design studies. The vertical bars represent the degree to which each device satisfies the list of needs. Note that a device like DCT-2 satisfies a significant number of needs but, being a hydrogen device, does not address activation — or breeding-related issues. DCT-8 does address these issues, but because it is not primarily

Table 2. Key parameters for DCT-2 and DCT-8

	DCT-2	DCT-8
Major radius (m)	2 9	3.6
Plasma radius (m)	0.77	0.75
Plasma elongation	1.6	1.6
Fusion power (MW)	0	390
Neutron wall loading (MW/m²)	0	2.2
Heating,		
ICRH (MW)	33	22
LHRH (MW)	0	10
Amplification factor, Q	0	00
Average total beta (%)	3.0	4.3
Plasma current (MA)	4.0	5.9
TF coil clear bore, width × height (m)	2.6 × 3.6	3.6 × 5.2
Cu coil clear bore, width × height (m)	NA	3.0 × 3.9
Field on axis (T)	4.7	7.0

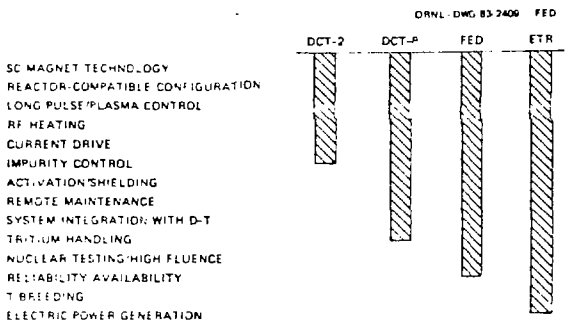

Fig. 7. Physics and engineering needs for ETR.

designed for neutron production, it does not address issues associated with large amounts of D-T operation (nuclear testing and high fluence). Note also that DCT-8 is not focused toward significant availability demonstration, as would be derived from an FED-like design.

Relative Costs

In developing the series of DCT options, rough estimates have been developed for the cost of the device. Since detailed engineering design has not been performed on these devices, the cost estimates are not firm and should be considered indicative of where the final costs of such options would fall on a relative basis. Using the FEDC systems code, supplemented with estimates of systems not represented in the systems code, the data in Table 3 were developed for relative costs of DCT-2 and DCT-8 when compared to TFTR, FED, and INTOR (which is taken here to be representative of an ETR).

Table 3. Relative Device Costs

TFTR	0.12
DCT-2	0.17
DCT-8	0.39
FED	0.63
INTOR (ETR)	1.00

This comparison suggests that DCT-8 is a very attractive engineering option to bridge the gap between TFTR and ETR. It provides a vehicle to satisfy essentially all of the physics and most of the engineering needs envisioned for ETR.

CONCLUSIONS

A number of desirable engineering features for the tokamak configuration have been developed in the reactor design studies performed in the last several years. These have been recognized by a number of different tokamak design teams, and the commonality of items on the list indicates the strong consensus among reactor designers about what represents a feasible and attractive tokamak reactor configuration. Given the convergence of engineering thinking toward the tokamak configuration, it remains to be demonstrated that these desirable features are truly viable; this can be accomplished only by incorporating them into the next-generation tokamak.

The recent scoping studies suggest that most of the desirable engineering features can be incorporated into any of the DCT options explored, including the smallest option studied, which employs LCP-size TF coils. In addition, the DCT-8 class device appears to be a reasonable step in project cost, as well as physics and technology objectives, and would represent a significant advance toward an ETR. However, the proof of the viability of the reactor study approaches and ideas requires the construction and operation of a tokamak that incorporates these perceived engineering features.

REFERENCES

1. C. A. FLANAGAN, D. STEINER, and G. E. SMITH, eds., "Fusion Engineering Device Design Description," Vol. 1, ORNL/TM-7948, Oak Ridge National Laboratory (December 1981).

2. "INTOR Phase I," IAEA, Vienna (1982).

3. C. C. BAKER et al., "STARFIRE — A Commercial Fusion Power Plant Study," ANL/FPP-80, Argonne National Laboratory (September 1980).

4. B. BADGER et al., "UWMAK-I, A Wisconsin Toroidal Fusion Reactor Design," UWFDM-68, University of Wisconsin (1974).

5. B. BADGER et all., "UWMAK-II, A Conceptual Tokamak Power Reactor Design," UWFDM-112, University of Wisconsin (October 1975).

6. B. BADGER et al., "UWMAK-III, A noncircular Tokamak Power Reactor Design," ER-368, Electric Power Research Institute (1976).

7. M. Roberts, "Oak Ridge Tokamak Experimental Power Reactor Study — 1976. Part 1: EPR Summary," ORNL/TM-5572, Oak Ridge National Laboratory (1976).

8. W. M. STACEY, JR. et al., "Tokamak Experimental Power Reactor Studies," ANL/CTR-75-2, Argonne National Laboratory (June 1975).

9. GAC FUSION ENGINEERING STAFF, "Experimental Power Reactor Conceptual Design Study," GA-A13534, General Atomic Co. (July 1975).

DISCLAIMER

This report was prepared as an account of work sponsored by an agency of the United States Government. Neither the United States Government nor any agency thereof, nor any of their employees, makes any warranty, express or implied, or assumes any legal liability or responsibility for the accuracy, completeness, or usefulness of any information, apparatus, product, or process disclosed, or represents that its use would not infringe privately owned rights. Reference herein to any specific commercial product, process, or service by trade name, trademark, manufacturer, or otherwise does not necessarily constitute or imply its endorsement, recommendation, or favoring by the United States Government or any agency thereof. The views and opinions of authors expressed herein do not necessarily state or reflect those of the United States Government or any agency thereof.