DISCLAIMER

This book was prepared as an account of work sponsored by an agency of the United States Government. Neither the United States Government nor any agency thereof, nor any of their employees, makes any warranty, express or implied, or assumes any legal liability or responsibility for the accuracy, completeness, or usefulness of any information, apparatus, product, or process disclosed, or represents that its use would not infringe privately owned rights. Reference herein to any specific commercial product, process, or service by trade name, trademark, manufacturer, or otherwise, does not necessarily constitute or imply its endorsement, recommendation, or favoring by the United States Government or any agency thereof. The views and opinions of authors expressed herein do not necessarily state or reflect those of the United States Government or any agency thereof.

By acceptance of this article, the publisher or recipient acknowledges the U.S. Government's right to retain a nonexclusive, royalty-free license in and to any copyright covering the article.

CONF-

ORNL BEAM LINE OPTICS: A PRESENTATION FOR THE NSLS X-RAY PRT MEETING NOV. 17-18 1980

CONF-8011128--1

DE82 004087

Gene E. Ice

PRESENT STATUS

After considering numerous focusing and monochromatizing schemes, we have settled on an optical geometry which we consider near ideal. The main optical element is a conical crystal which focuses 15 mrad of horizontal divergence from 2-20 keV, and which focuses 12 mrad of horizontal divergence up to 40 keV. A model of the key conical crystal bender has been designed and is out for bids. We plan to test the model optically and then with synchrotron radiation from Cornell. Should the conical crystal geometry prove too difficult, we are prepared to fall back on the BNL paraboloidal mirror concept.

DESIGN CRITERIA

The ORNL beam line was designed to operate under the physical constraints of the source and was designed to meet the needs of our experimental program. The following requirements were used in evaluating various beam line geometries.

(1) Minimum energy spread and minimum spread in $\sin\theta/\lambda$ [Spectroscopy-Diffraction]

(2) Maximum flux - intensity.

(3) Energy range from 2-40 keV. [Reduction of termination errors and access to K edges Z=15-57, L edges =38]

(4) Fixed beam on the target.

(5) Tolerance to thermal load.

(6) Control over harmonic contamination.

(7) No optical element can be closer than 5 m, nor further than 24 m. No element can be closer than about 8 m which we might need to access when there is e^- current in the ring. In general, no element can interfer with territory assigned to other beam lines.

(8) The first optical element <u>must</u> be able to tolerate 40 watt/mrad. If the first element is a mirror, the second element must be able to tolerate nearly 40 watt/mrad.

*Research sponsored by the Division of Materials Sciences, U.S. Department of Energy, under contract W-7405-eng-26 with the Union Carbide Corporation.

WHY A CONICAL CRYSTAL?

A doubly curved Johann or Johannson crystal has many attributes which would be desirable in a focusing and monochromatizing element for synchrotron radiation. In particular these crystals can accept more horizontal and vertical divergence than mirror systems, and they provide energy resolution limited only by the rocking curve width of the crystal used, and the source size. These geometries are however impractical for use on a synchrotron radiation beam line which is to be tuned over a wide energy range. Not only must the two curvatures be dynamically controlled as energy is scanned, by there are no practical geometries in which a doubly concave Bragg crystal can be matched with another crystal to yield a nondispersive focusing line.

A more appealing geometry for synchrotron radiation consists of a flat first crystal followed by a cylindrical crystal in the nondispersive mode. A cylindrical second crystal acts like a focusing element to the horizontal divergence, and like a flat crystal to the vertical divergence. For high transmission through such a two crystal system however, the Bragg angles of the x-rays impinging on the first crystal must match the Bragg angles of the reflected x-rays on the second cylindrical-crystal. The Bragg angle of a ray with divergence ψ out of the plane of scatter is simply,

$$\sin\theta' = \sin\theta\cos\psi \qquad \text{Eq. (1)}$$

where θ' is the Bragg angle of the divergent ray, θ is the Bragg angle of the central ray, and ψ is the divergence out of the plane of scatter (Fig. 1). Consider now a cylindrically bent crystal as shown in Fig. 2. The Bragg angles for rays incident on this crystal are defined by,

$$\sin\theta' = \sin\theta\cos\psi\,[1.+(1.-(\delta/N)^2)\tan^2\psi/\sin^2\theta]^{1/2} \qquad \text{Eq. (2)}$$

Here N is the cylindrical bend radius, θ is the Bragg angle of the central ray, ψ is the horizontal divergence and $\delta = F_1\sin\theta - N$ where F_1 is the source to crystal distance. As pointed out by Sparks and Borie, when $N = F_1\sin\theta/(1\pm\cos\theta)$ $\sin\theta' = \sin\theta$ for all ψ. This dictates that a cylindrical crystal in the

nondispersive mode with an upstream flat crystal, will only have matched Bragg angles for magnification $\sim 1/3$. The focus from this system is however distorted for $\psi \gtrsim 10$ mrad and $E \gtrsim 10$ keV. Furthermore the radiation impinging on the target has a horizontal divergence 3x the original x-ray beam divergence.

Improved optical performance can be achieved by going to a conical rather than a cylindrical bend. Along the intersection with a fan of horizontally divergent radiation, a conical curved crystal mimics a nearly ideal doubly curved Johann crystal. To the vertical beam divergence however, the crystal acts like a flat crystal. It is therefore possible to simultaneously focus a horizontal fan of radiation, and match the Bragg angles of rays reflected by a flat crystal upstream. The deviation from a cylindrical bend is small, and the required conical dimensions can be quickly derived from simple arguments. As seen from Eq. (2), the Bragg angle at magnification one for divergence ψ is simply,

$$N=F_1\sin\theta \quad \Rightarrow \quad \sin\theta'=\sin\theta\cos\psi[1.+\tan^2\psi/\sin^2\theta]^{1/2}. \qquad \text{Eq. (3)}$$

For the divergences and Bragg angles we are dealing with, the difference in Bragg angles between the flat and cylindrical crystal is to better than 3×10^{-6} rad,

$$d\theta=\tan^2\psi/2\sin\theta . \qquad \text{Eq.(4)}$$

Thus as we already knew, a cylindrical and flat crystal do not match at magnification one. If we compare the surface of a cylinder, to that of a cone, where

$$y=-R(x)[1-\mathrm{sqrt}(1-(z/R)^2] \qquad R(x)=F_1\sin\theta \quad \text{cylinder} \qquad \text{Eq. (5)}$$
$$R(x)=F_1\sin\theta[1+\alpha x] \quad \text{cone}$$

The tilt of the cone Bragg plane to the cylinder planes is just $F_1\psi^2\alpha/2\sin\theta$. Thus the Bragg angles from the flat and conical crystal are matched when $\alpha=1/F_1$. This ideal cone surface is illustrated in Fig. 3.

Although the conical system focuses horizontal divergence, it does not focus vertical divergence. In order to achieve a doubly focused beam we propose to place a simple cylindrical mirror upstream of the two crystal

monochromator. Ray tracings have been performed to estimate the focal spot size, intensity, energy resolution and transmission of the mirror double crystal system. For doubly focused ray tracings, the image size is dominated by the geometrical vertical and horizontal magnification. Thus the horizontal size is nearly the source size, and the vertical size is nearly 1.2-3 times the source size depending on whether the mirror is modeled at 5 m or at 9 m from the source (the conical crystal was modeled at 10 m). Energy resolution in the doubly focused mode is dominated by the vertical divergence/mag. Hence at vertical magnification 3, the energy resolution is nearly 3 times smaller than for magnification 1. Another possible mode of operation is with the x-ray beam collimated in the vertical divergence. In this case highest intensity results when the mirror is closest to the source, and best energy resolution when the mirror is furtherest from the source. In general energy resolution is about 1-10times better in this geometry, but intensity is down by a factor of 4-10. Some ray tracing results are tabulated in table 1, and some ray tracing figures are given in Fig. 4-10.

ORNL DOUBLE CRYSTAL MONOCHOMATOR

Because we want to be able to scan to 40 keV with the Si_{111} reflection, the proposed BNL monochromator is not adequate for our needs. Instead,we are proposing to build a monochromator which will have the ability to scan to Bragg angles as low as 2.4^{o}. This system is based on commerical stepping motor driven translation stages. The advantages of the ORNL design are, simpler mechanical construction and the elimination of air bearings, large θ range ($2.4\text{-}84^{o}$), independent operation of rotation and translation motions, counter-balanced loads to prevent torques on critical components, and flexible use of translation stage to compensate for changes in crystal thickness (for example during bending or replacement). Furthermore, the translation stages required, are compatible with 10^{-6} torr vacuum.

The disadvantages are the added complexity in the software to drive the two stages, and the requirement that the crystal manipulators not extend past the crystal edge nearest the incident beam if the monochromator is to be used at low energies. The proposed two crystal monochromator is illustrated in Fig. (11). The entire optics is illustrated in Fig. (12).

RAY TRACING FOR THE ORNL
CONICAL CRYSTAL + CYLINDRICAL MIRROR

Number of rays = 8800
Conical crystal located 10 m from the source point (horizontal mag. 1).
Source vertical RMS size = 5×10^{-5} m.
Source horizontal RMS size = 4×10^{-4} m.

Crystal modeled = Si_{111}.

E = 3 keV Horizontal acceptance = 15 mrad
Si_{111} Darwin width = 1.3×10^{-4} 2-crystal efficiency = 99.7%

MIRROR POSITION (m)	VERTICAL MAG.	RMS DIVERGENCE THROUGH 2-CRYSTALS		FOCAL SPOT SIZE HORIZONTAL	FOCAL SPOT SIZE VERTICAL	
		IDEAL	RAY TRACE		IDEAL	RAY TRACE
5	15/5	4.8×10^{-5}	4.8×10^{-5}	4.0×10^{-4}	1.5×10^{-4}	2.0×10^{-4}
5	∞/5	1.0×10^{-5}	1.2×10^{-5}	4.0×10^{-4}	6.9×10^{-4}	7.0×10^{-4}
7	13/7	7.6×10^{-5}	7.6×10^{-5}	4.0×10^{-4}	9.3×10^{-5}	1.6×10^{-4}
7	∞/7	7.1×10^{-6}	9.9×10^{-6}	4.0×10^{-4}	9.6×10^{-4}	9.7×10^{-4}
9	11/9	1.1×10^{-4}	1.1×10^{-4}	4.0×10^{-4}	6.1×10^{-5}	1.5×10^{-4}
9	∞/9	5.6×10^{-4}	8.9×10^{-4}	4.0×10^{-4}	1.2×10^{-3}	1.2×10^{-3}

E = 5 keV Horizontal acceptance = 15 mrad.
Si_{111} Darwin width = 6.4×10^{-5} Transmission= 99.4%

MIRROR POSITION (m)	VERTICAL MAG.	RMS DIVERGENCE THROUGH 2-CRYSTALS		FOCAL SPOT SIZE HORIZONTAL	FOCAL SPOT SIZE VERTICAL	
		IDEAL	RAY TRACE		IDEAL	RAY TRACE
5	15/5	3.5×10^{-5}	3.6×10^{-5}	4.0×10^{-4}	1.5×10^{-4}	1.7×10^{-4}
5	∞/5	1.0×10^{-5}	1.1×10^{-5}	4.0×10^{-4}	5.0×10^{-4}	5.1×10^{-4}
7	13/7	5.4×10^{-5}	5.5×10^{-5}	4.0×10^{-4}	9.3×10^{-5}	1.2×10^{-4}
7	∞/7	7.1×10^{-6}	8.1×10^{-6}	4.0×10^{-4}	7.0×10^{-4}	7.0×10^{-4}
9	11/9	8.2×10^{-5}	8.2×10^{-5}	4.0×10^{-4}	6.1×10^{-5}	9.8×10^{-5}
9	∞/9	5.6×10^{-6}	6.7×10^{-6}	4.0×10^{-4}	9.0×10^{-4}	9.0×10^{-4}

E = 10 keV Horizontal acceptance = 15 mrad.

Si_{111} Darwin width = 3.0×10^{-5} Transmission = 98.0 %

MIRROR POSITION (m)	VERTICAL MAG.	RMS DIVERGENCE THROUGH 2-CRYSTALS IDEAL	RMS DIVERGENCE THROUGH 2-CRYSTALS RAY TRACE	FOCAL SPOT SIZE HORIZONTAL	FOCAL SPOT SIZE VERTICAL IDEAL	FOCAL SPOT SIZE VERTICAL RAY TRACE
5	15/5	2.9×10^{-5}	3.1×10^{-4}	4.0×10^{-4}	1.5×10^{-4}	1.5×10^{-4}
5	∞/5	1.0×10^{-5}	1.0×10^{-5}	4.0×10^{-4}	4.1×10^{-4}	4.3×10^{-4}
7	13/7	4.5×10^{-5}	4.6×10^{-5}	4.0×10^{-4}	9.3×10^{-5}	9.6×10^{-5}
7	∞/7	7.1×10^{-6}	7.3×10^{-6}	4.0×10^{-4}	5.8×10^{-4}	5.8×10^{-4}
9	11/9	6.8×10^{-5}	6.9×10^{-5}	4.0×10^{-4}	6.1×10^{-5}	6.6×10^{-5}
9	∞/9	5.6×10^{-6}	5.7×10^{-6}	4.0×10^{-4}	7.5×10^{-4}	7.5×10^{-4}

E = 20 keV Horizontal acceptance = 15 mrad.

Si_{111} Darwin width = 1.5×10^{-5} Transmission = 91.5%

MIRROR POSITION (m)	VERTICAL MAG.	RMS DIVERGENCE THROUGH 2-CRYSTALS IDEAL	RMS DIVERGENCE THROUGH 2-CRYSTALS RAY TRACE	FOCAL SPOT SIZE HORIZONTAL	FOCAL SPOT SIZE VERTICAL IDEAL	FOCAL SPOT SIZE VERTICAL RAY TRACE
5	15/5	2.2×10^{-5}	2.4×10^{-5}	4.2×10^{-4}	1.5×10^{-4}	1.5×10^{-4}
5	∞/5	1.0×10^{-5}	1.0×10^{-5}	4.2×10^{-4}	4.1×10^{-4}	4.0×10^{-4}
7	13/7	3.3×10^{-5}	3.3×10^{-5}	4.2×10^{-4}	9.3×10^{-5}	1.0×10^{-4}
7	∞/7	7.1×10^{-5}	7.3×10^{-5}	4.2×10^{-4}	4.2×10^{-4}	4.1×10^{-4}
9	11/9	4.9×10^{-5}	4.9×10^{-5}	4.2×10^{-4}	6.1×10^{-5}	7.1×10^{-5}

E = 30 keV Horizontal Acceptance = 15 mrad

Si_{111} Darwin Width = 9.9×10^{-6} Transmission = 62.6%

MIRROR POSITION (m)	VERTICAL MAG.	RMS DIVERGENCE THROUGH 2-CRYSTALS IDEAL	RMS DIVERGENCE THROUGH 2-CRYSTALS RAY TRACE	FOCAL SPOT SIZE HORIZONTAL	FOCAL SPOT SIZE VERTICAL IDEAL	FOCAL SPOT SIZE VERTICAL RAY TRACE
5	15/5	1.9×10^{-5}	2.1×10^{-5}	3.9×10^{-4}	1.5×10^{-4}	1.5×10^{-4}
5	/5	1.0×10^{-5}	1.0×10^{-5}	3.9×10^{-4}	2.5×10^{-4}	2.6×10^{-4}
7	13/7	2.7×10^{-5}	2.8×10^{-5}	3.9×10^{-4}	9.3×10^{-5}	9.9×10^{-5}
7	/7	7.1×10^{-6}	7.3×10^{-6}	3.9×10^{-4}	3.4×10^{-4}	3.4×10^{-4}
9	11/9	4.0×10^{-5}	4.0×10^{-5}	3.9×10^{-4}	6.1×10^{-5}	6.9×10^{-5}
9	/9	5.6×10^{-6}	5.8×10^{-6}	3.9×10^{-4}	4.3×10^{-4}	4.3×10^{-4}

E = 40 keV Horizontal acceptance = 12 mrad

Si_{111} Darwin Width = 7.4×10^{-6} Transmission = 55.5%

MIRROR POSITION (m)	VERTICAL MAG.	RMS DIVERGENCE THROUGH 2-CRYSTALS IDEAL	RMS DIVERGENCE THROUGH 2-CRYSTALS RAY TRACE	FOCAL SPOT SIZE HORIZONTAL	FOCAL SPOT SIZE VERTICAL IDEAL	FOCAL SPOT SIZE VERTICAL RAY TRACE
5	15/5	1.7×10^{-5}	1.9×10^{-5}	3.6×10^{-4}	1.5×10^{-4}	1.5×10^{-4}
5	/5	1.0×10^{-5}	1.0×10^{-5}	3.6×10^{-4}	2.0×10^{-4}	2.3×10^{-4}
7	13/7	2.3×10^{-5}	2.4×10^{-5}	3.6×10^{-4}	9.3×10^{-5}	9.6×10^{-5}
7	/7	7.1×10^{-6}	7.2×10^{-6}	3.6×10^{-4}	2.9×10^{-4}	2.9×10^{-4}
9	11/9	3.4×10^{-5}	3.4×10^{-5}	3.6×10^{-4}	6.1×10^{-5}	6.7×10^{-5}
9	/9	5.6×10^{-6}	5.7×10^{-6}	3.6×10^{-4}	3.7×10^{-4}	3.6×10^{-4}

FIG. 1

ORNL-DWG 79-14948

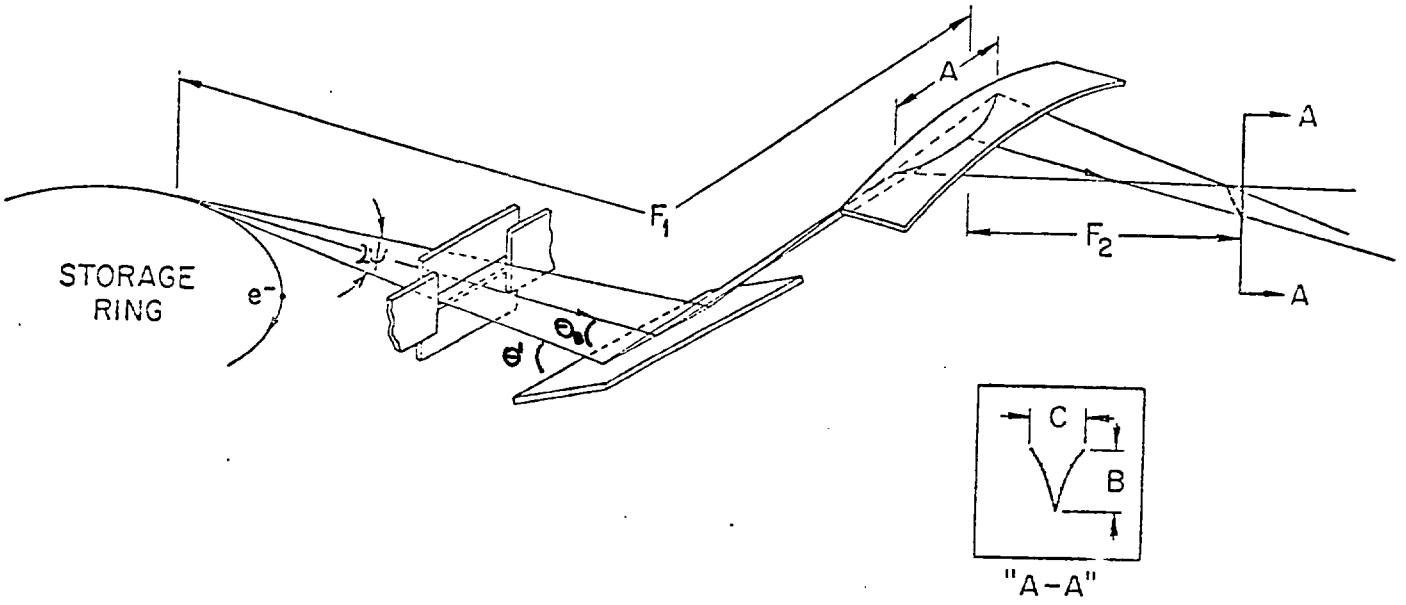

θ_B is the Bragg angle of the central ray, and θ is the Bragg angle of the ray with horizontal divergence ψ.

ORNL-DWG 79-14949

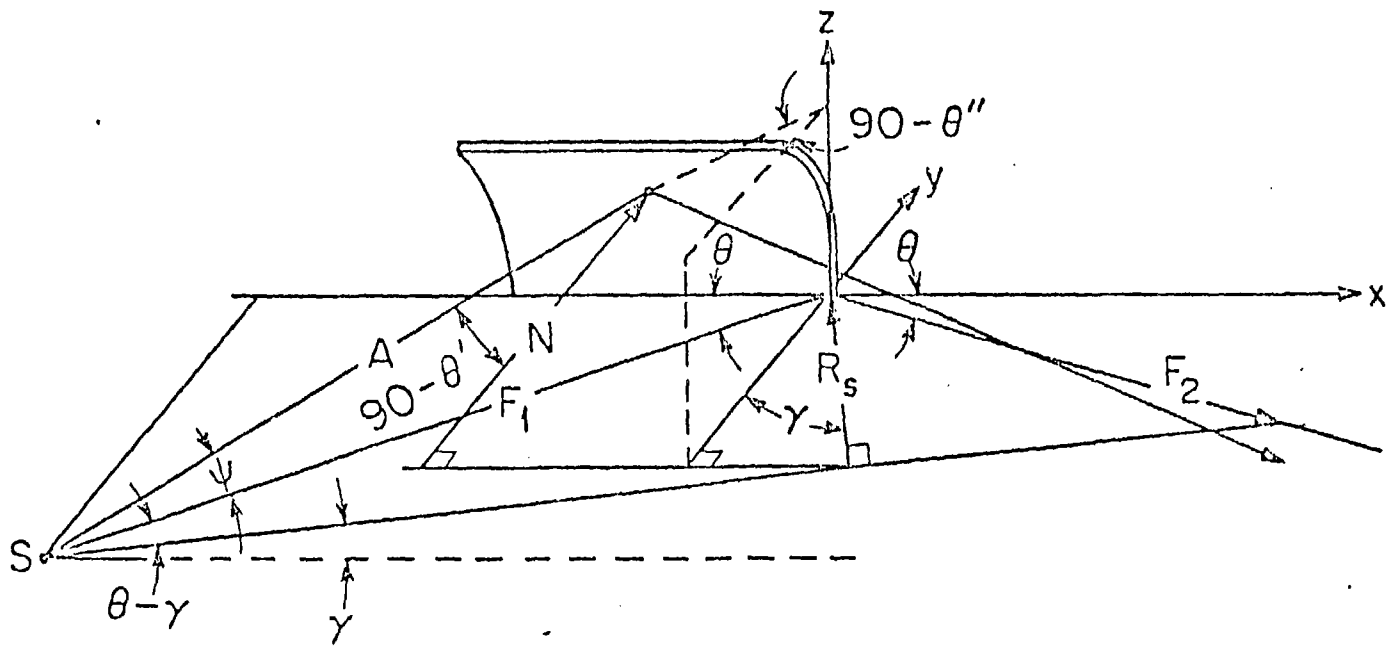

Figure 3 Geometry of the cylindrically curved crystal for calculating the error θ'-θ and θ''-θ, resulting from the horizontal divergence, ψ, of the synchrotron radiation source.

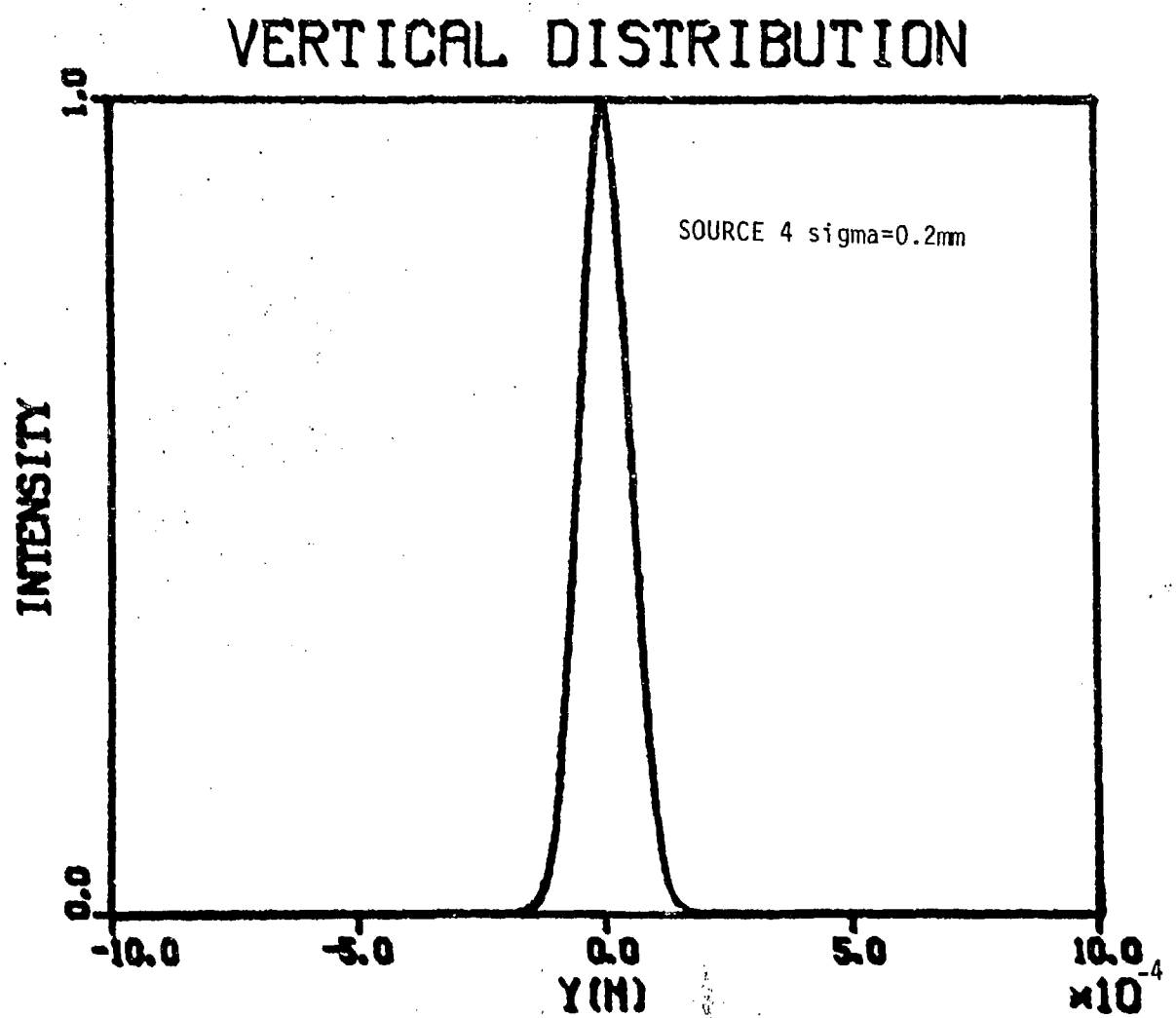
VERTICAL DISTRIBUTION
SOURCE 4 sigma=0.2mm
INTENSITY
1.0
0.0
-10.0
-5.0
0.0
5.0
10.0
Y(M)
×10^-4

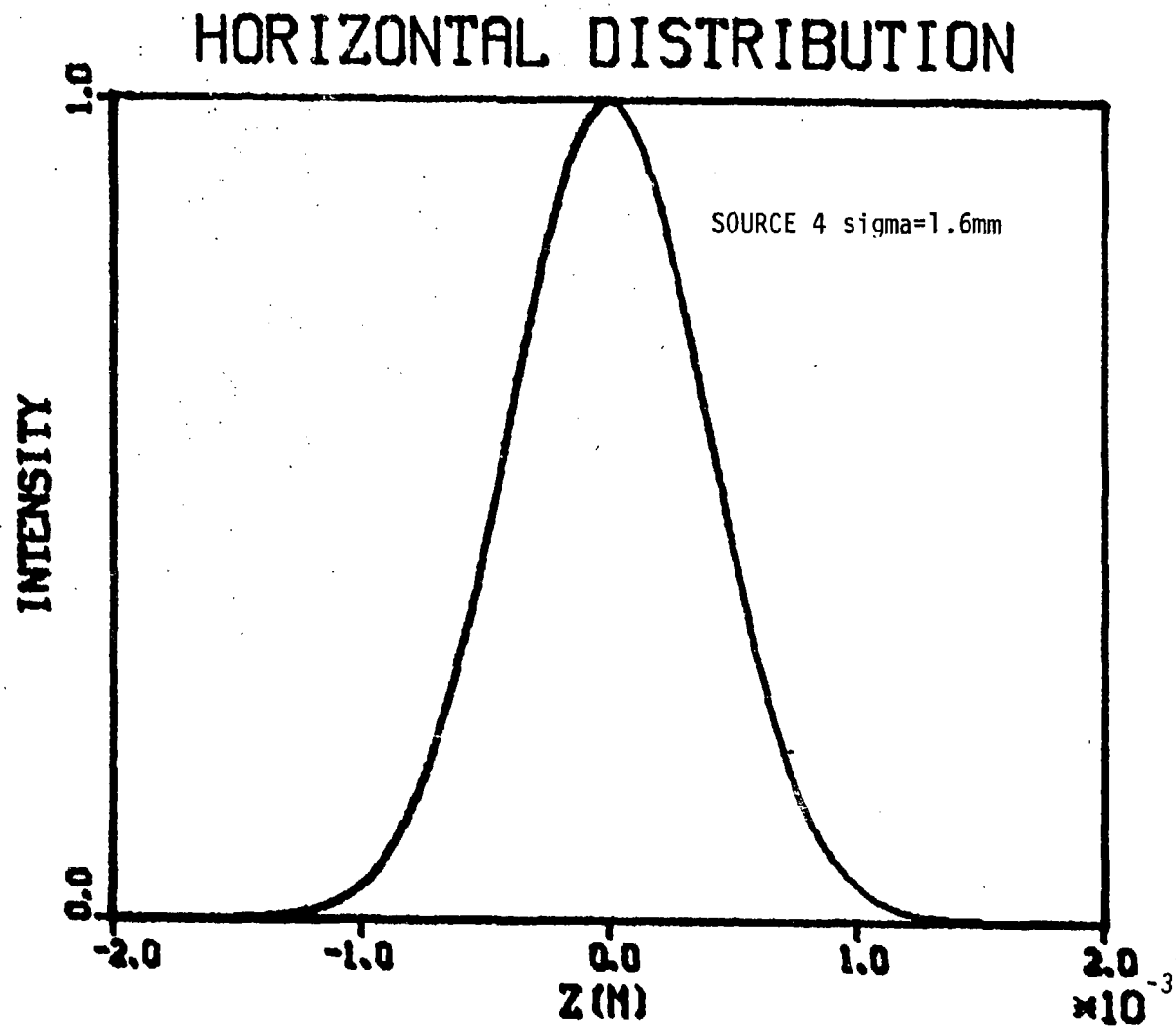
HORIZONTAL DISTRIBUTION
SOURCE 4 sigma=1.6mm
INTENSITY
1.0
0.0
-2.0
-1.0
0.0
1.0
2.0
Z(M)
×10^-3

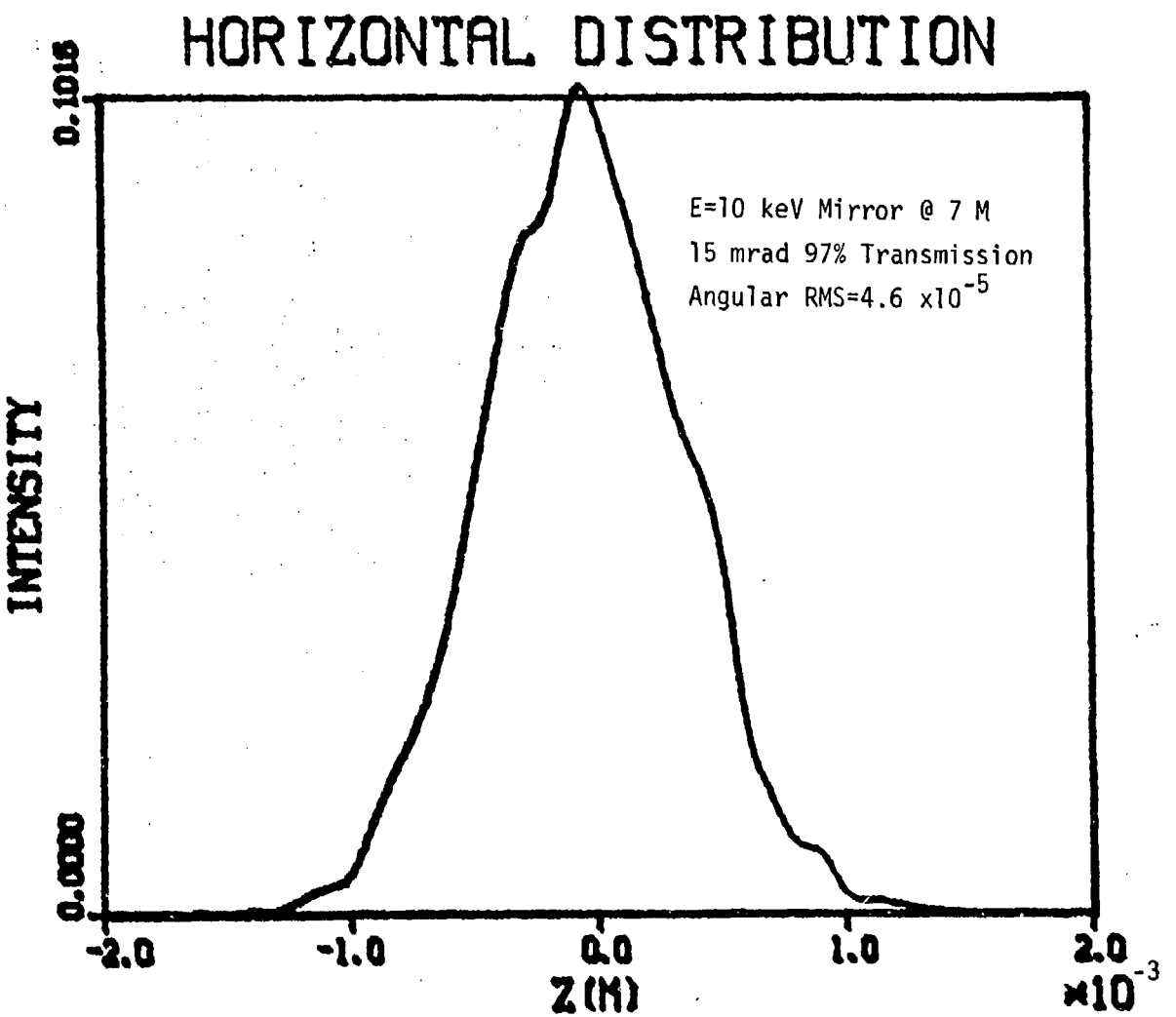
HORIZONTAL DISTRIBUTION
E=10 keV Mirror @ 7 M
15 mrad 97% Transmission
Angular RMS=4.6 x10^-5
INTENSITY
0.1016
0.0000
-2.0
-1.0
0.0
1.0
2.0
Z(M)
x10^-3

40 keV

56%
12 Mrad
5.4 cm
crystal

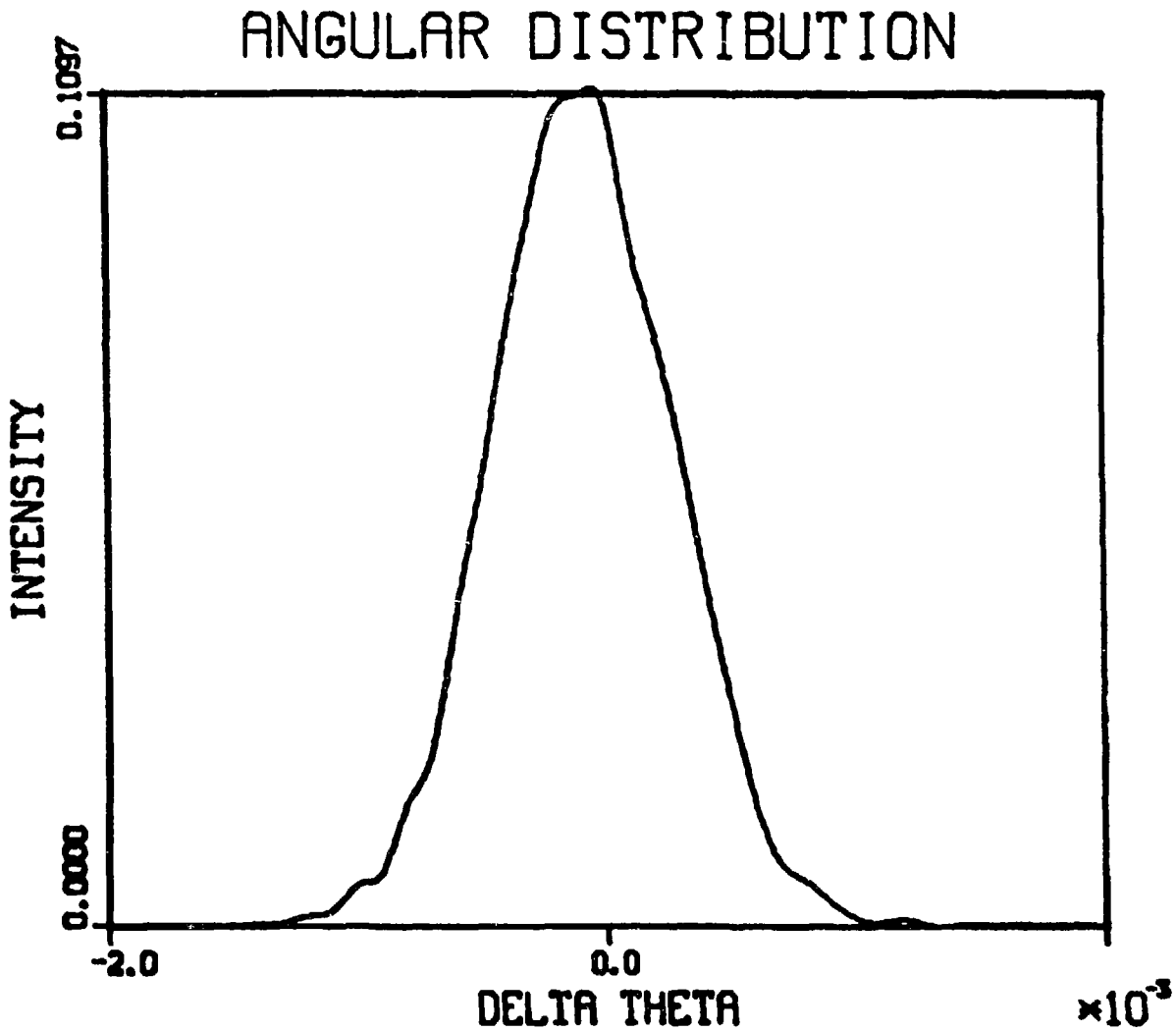

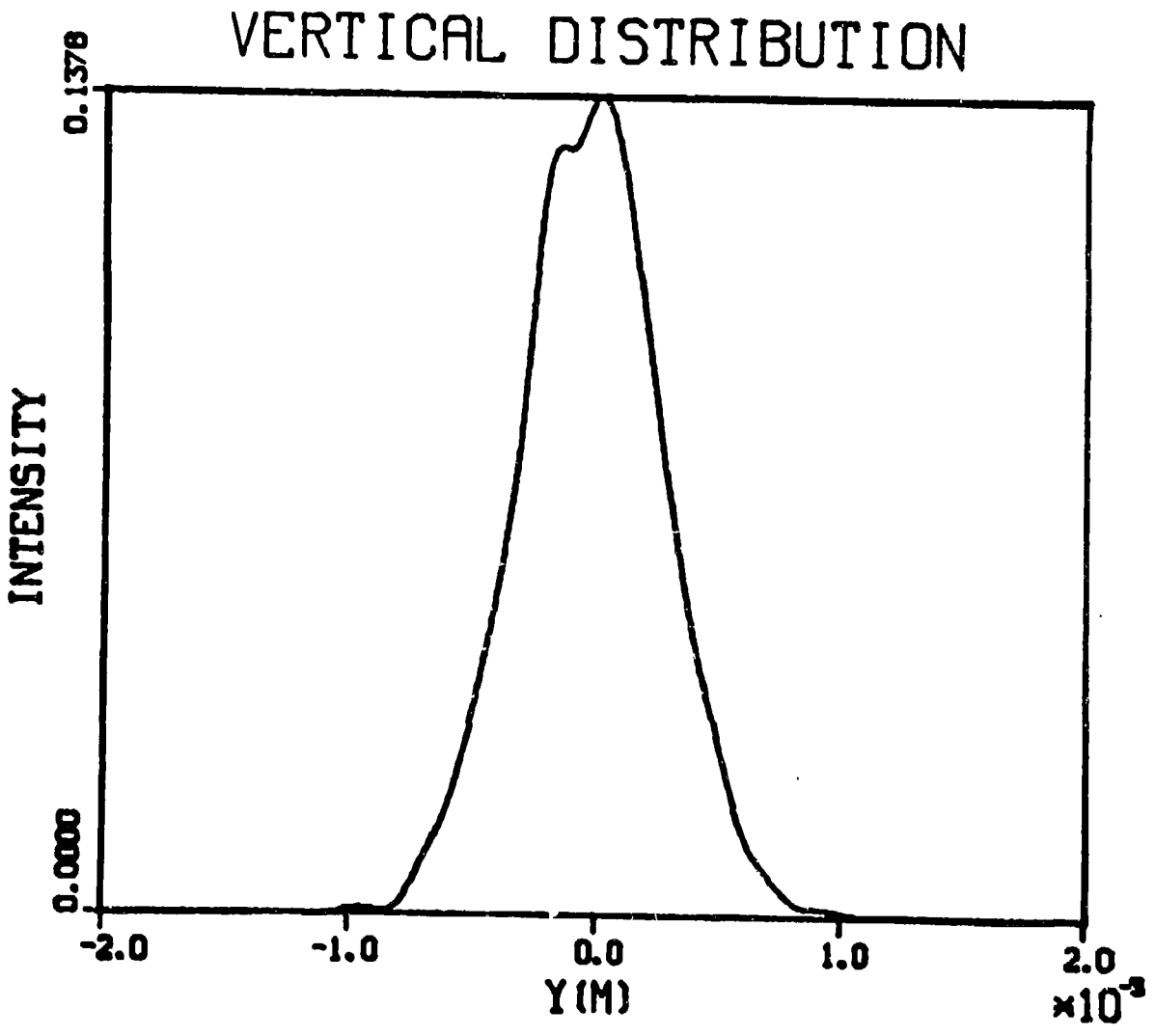
VERTICAL DISTRIBUTION
0.1378
0.0000
INTENSITY
-2.0
-1.0
0.0
1.0
2.0
Y(M)
×10⁻³

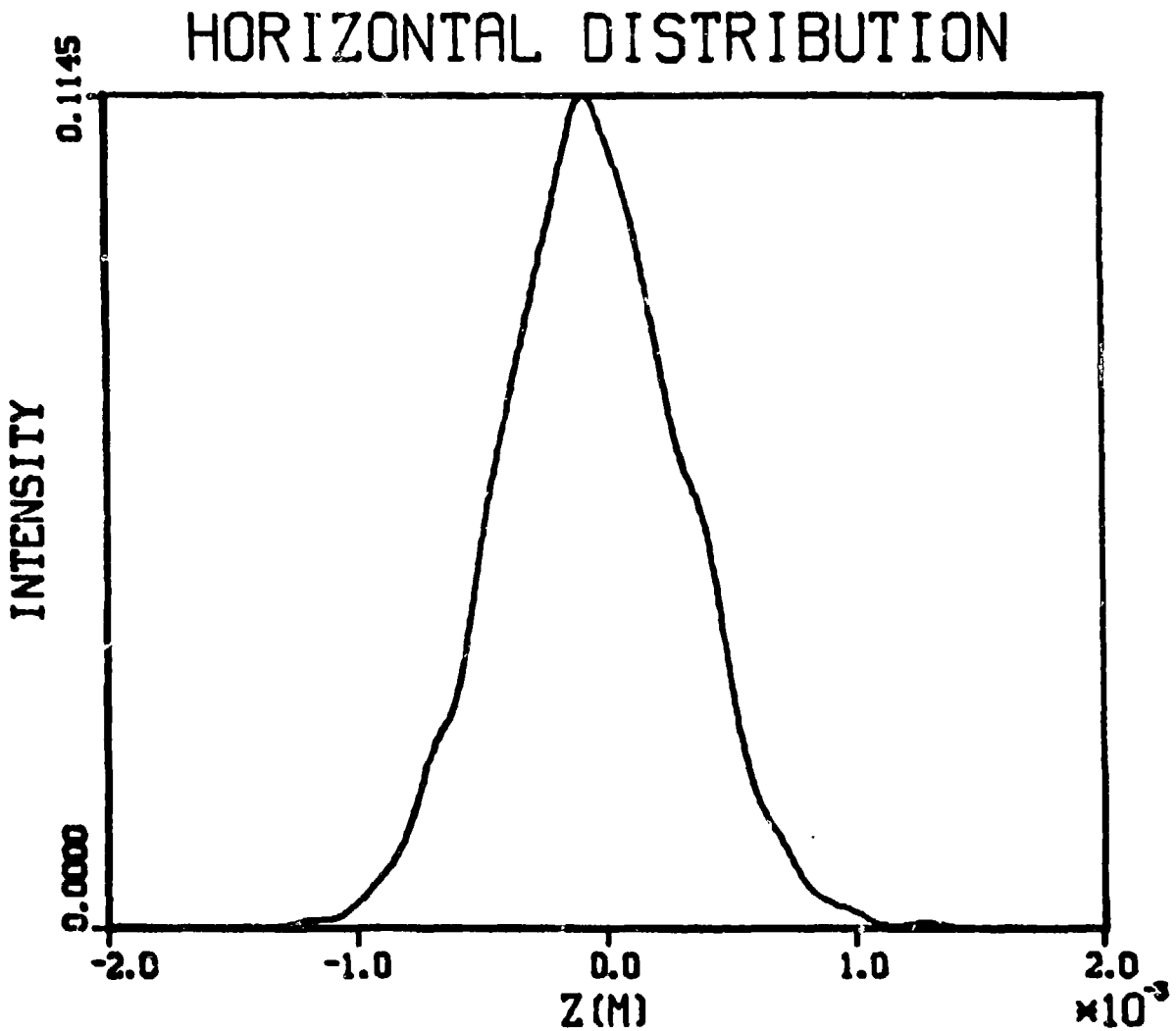
HORIZONTAL DISTRIBUTION
0.1145
0.0000
INTENSITY
-2.0
-1.0
0.0
1.0
2.0
Z(M)
×10⁻³

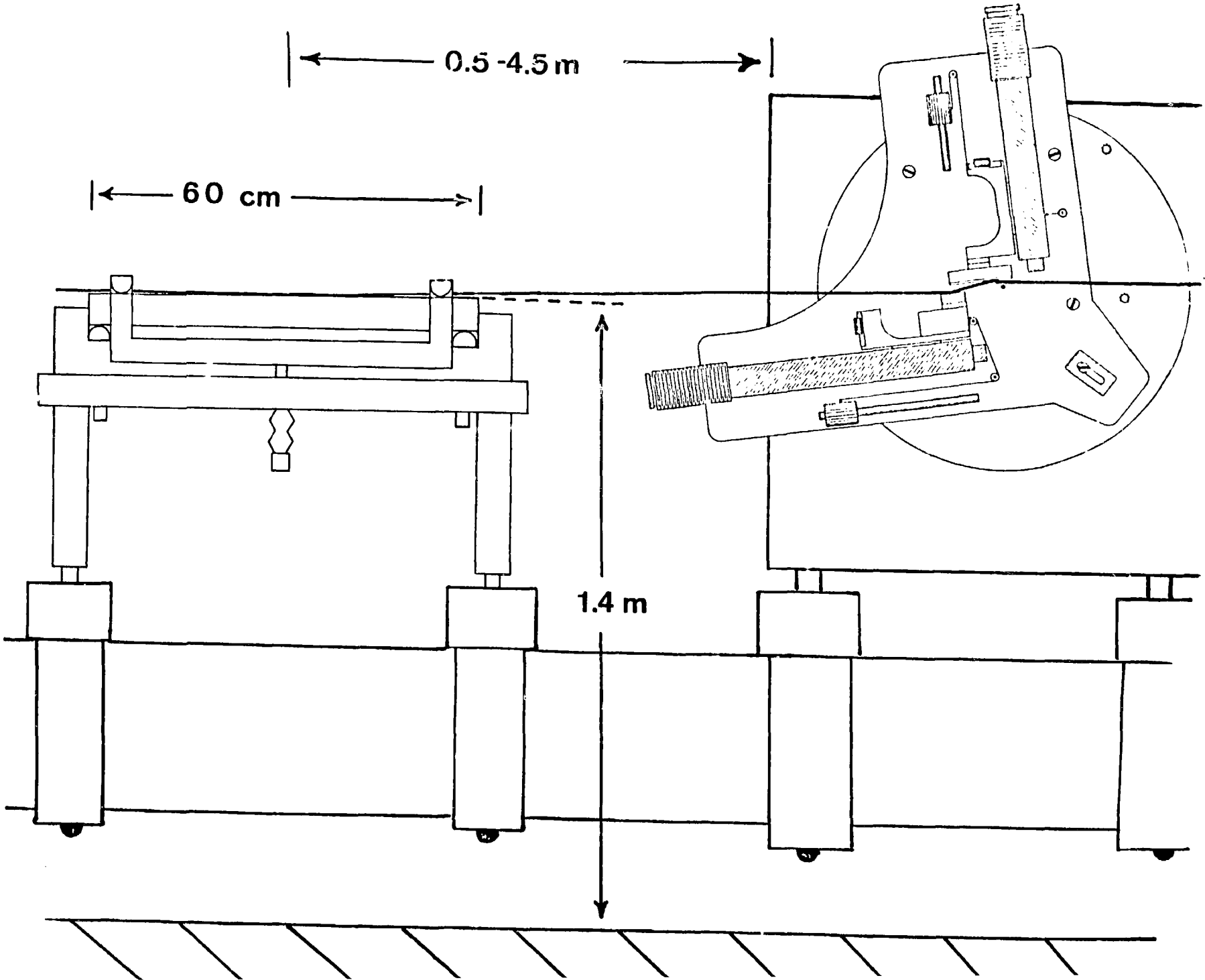
0.5 -4.5 m
60 cm
1.4 m

ORNL DOUBLE CRYSTAL MONOCHROMATOR

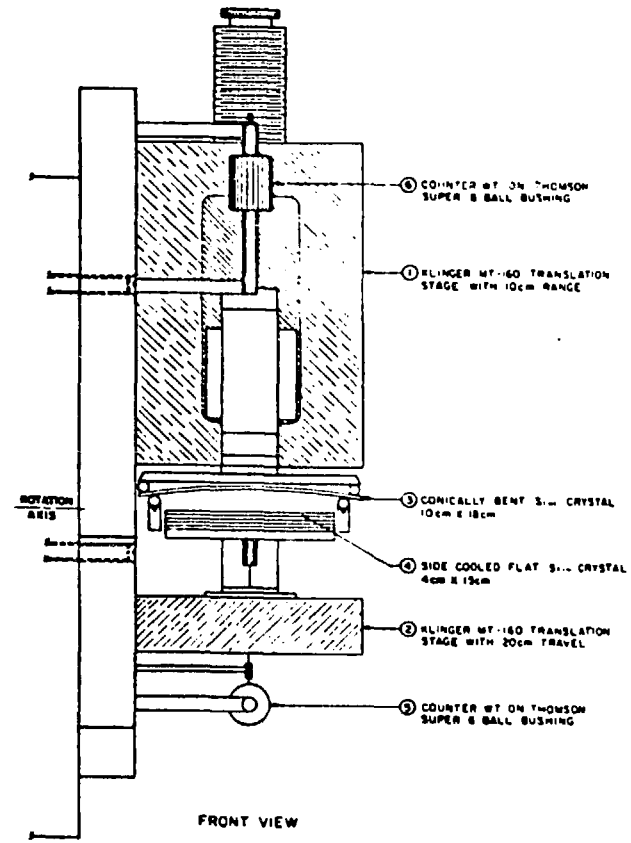

FRONT VIEW

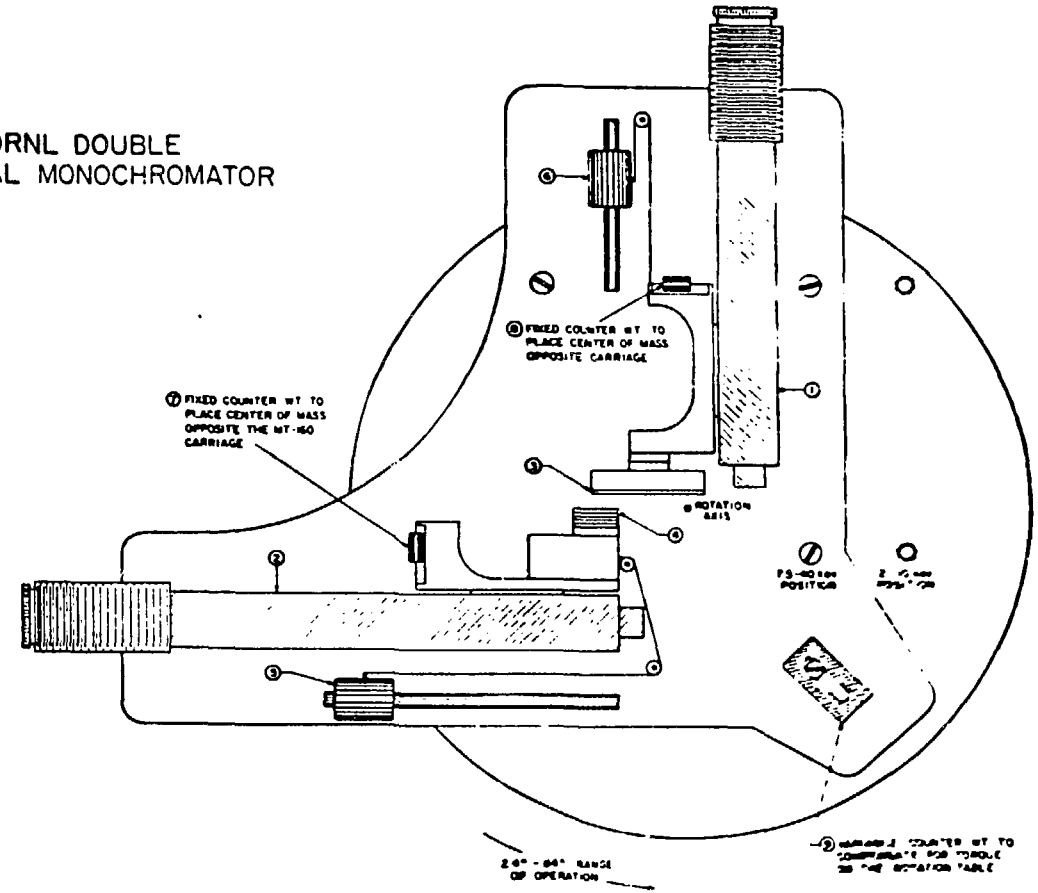

SIDE VIEW