ance of this article, the
r or recipient acknowledges
S. Government's right to
retain a nonexclusive, royalty-free
license in and to any copyright
covering the article.

CONF-860652--9

CONF-860652--9

DE86 013267

MAINTAINABILITY FEATURES OF THE COMPACT IGNITION TOKAMAK

P. T. Spampinato

*Research sponsored by the Office of Fusion Energy, U.S. Department of Energy, under Contract DE-AC05-8421400 with Martin Marietta Energy Systems, Incorporated.

MASTER

DISCLAIMER

This report was prepared as an account of work sponsored by an agency of the United States Government. Neither the United States Government nor any agency thereof, nor any of their employees, makes any warranty, express or implied, or assumes any legal liability or responsibility for the accuracy, completeness, or usefulness of any information, apparatus, product, or process disclosed, or represents that its use would not infringe privately owned rights. Reference herein to any specific commercial product, process, or service by trade name, trademark, manufacturer, or otherwise does not necessarily constitute or imply its endorsement, recommendation, or favoring by the United States Government or any agency thereof. The views and opinions of authors expressed herein do not necessarily state or reflect those of the United States Government or any agency thereof.

DISTRIBUTION OF THIS DOCUMENT IS UNLIMITED

MAINTAINABILITY FEATURES OF THE COMPACT IGNITION TOKAMAK

P. T. SPAMPINATO
FUSION ENGINEERING DESIGN CENTER

C. W. BUSHNELL
PRINCETON PLASMA PHYSICS LABORATORY

SEVENTH TOPICAL MEETING ON THE TECHNOLOGY OF FUSION ENERGY
JUNE 16, 1986
RENO, NEVADA

DISASSEMBLY AND MAINTENANCE HAVE BEEN KEY FACTORS IN DESIGNING THE CIT REACTOR

- PHILOSOPHY (SLIGHTLY MODIFIED)
- IN-VESSEL OPERATIONS (ALL-REMOTE)
- EX-VESSEL OPERATIONS (LIMITED PERSONNEL ACCESS AND ALL-REMOTE)
- FACILITIES
- TIMETABLE

THE BASIC MAINTENANCE PHILOSOPHY IS TO DESIGN FOR ALL-REMOTE OPERATIONS WHILE MAXIMIZING THE USE OF HANDS-ON OPERATIONS

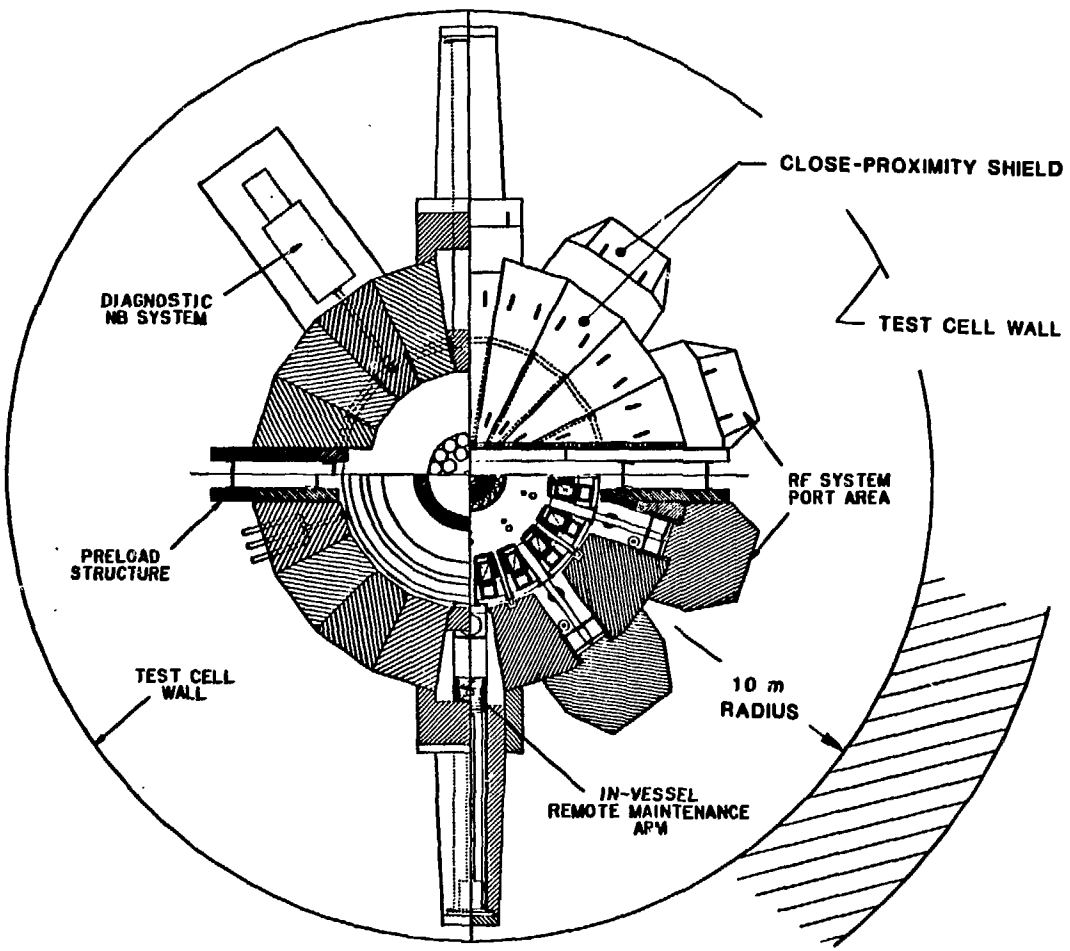

CIT PLAN VIEW

- REACTOR SHIELD
- 1 MREM/H AFTER 24 H
- REMOTE OP'S WITHIN SHIELD
- HANDS-ON OP'S OUTSIDE SHIELD

PHILOSOPHY (CONT)

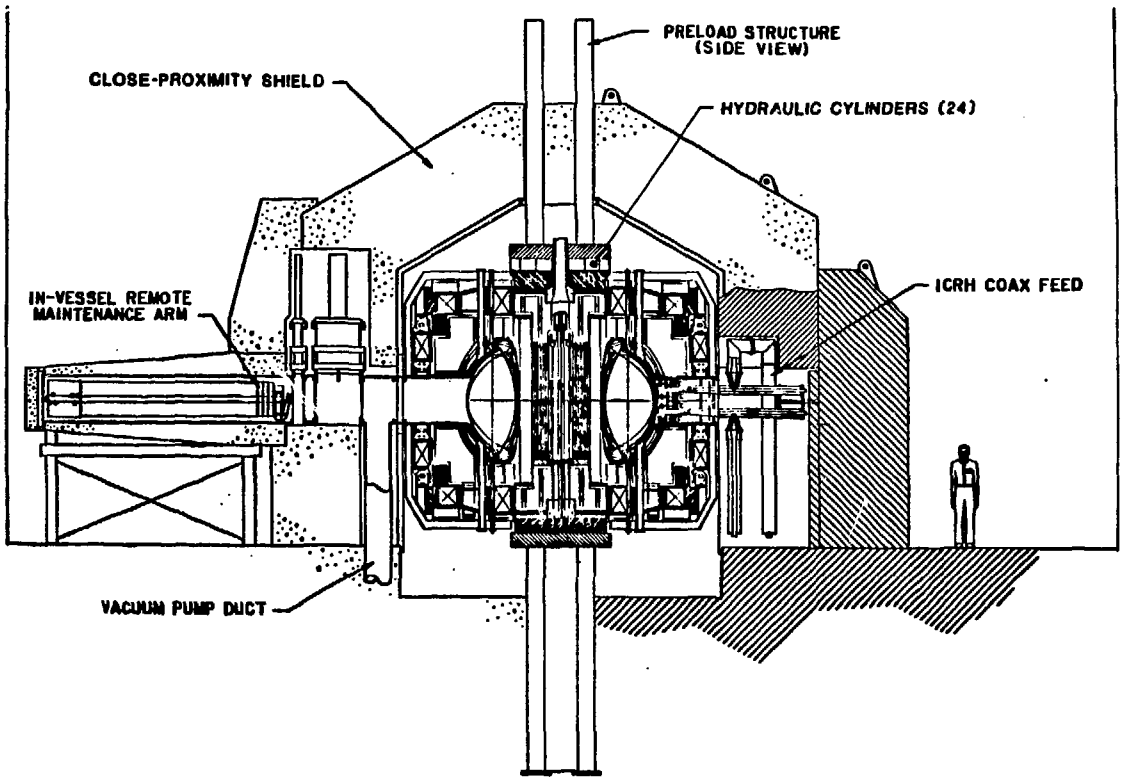

CIT ELEVATION VIEW (SIDE)

- REPLACE LIFE-LIMITED COMPONENTS
- LIFETIME COMPONENTS NOT READILY REPLACED (TF/PF/VV/SS)

⇓

- EXTENSIVE QA DURING FAB. & INSTL.
- VERIFICATION DURING H_2PHASE

A PRELIMINARY EVALUATION OF MAINTENANCE OPERATIONS HAS BEEN COMPLETED IN ORDER TO DEVELOP EQUIPMENT CONCEPTS, EVALUATE R&D NEEDS, ASSESS COSTS AND SCHEDULES

- INSPECT AND REPLACE GRAPHITE ARMOR TILES, LIMITER/DIVERTOR PLATES, HYDRAULIC PRELOAD CYLINDERS, PORT COVERS, VACUUM WINDOWS AND OPTICAL MIRRORS USING REMOTE EQUIPMENT

- INSPECT AND REPLACE REACTOR AUXILIARY EQUIPMENT USING PERSONNEL OR REMOTE EQUIPMENT

- PERFORM ADJUSTMENTS AND MODIFICATIONS TO AUXILIARY EQUIPMENT AND ACCOMPLISH VACUUM/COOLANT LEAK REPAIRS USING PERSONNEL OR REMOTE EQUIPMENT

IN-VESSEL OPERATIONS ARE ACCOMPLISHED USING TWO ARTICULATED BOOM MANIPULATORS AND TWO INSPECTION SYSTEMS WHICH OPERATE IN VACUUM; FIRST OPERATION IS VACUUM VESSEL ASSEMBLY

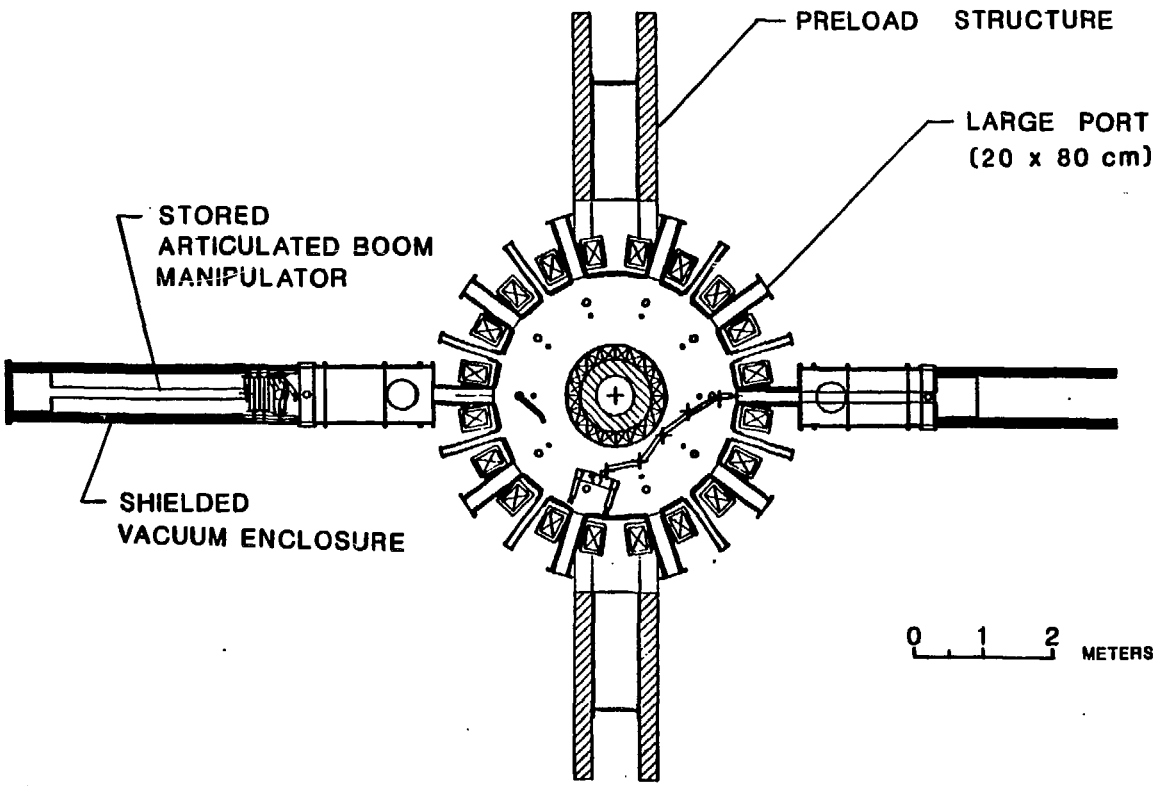

- 2 DEDICATED LARGE PORTS FOR ABM
- SHIELDED VACUUM ENCLOSURE

IN-VESSEL (CONT)

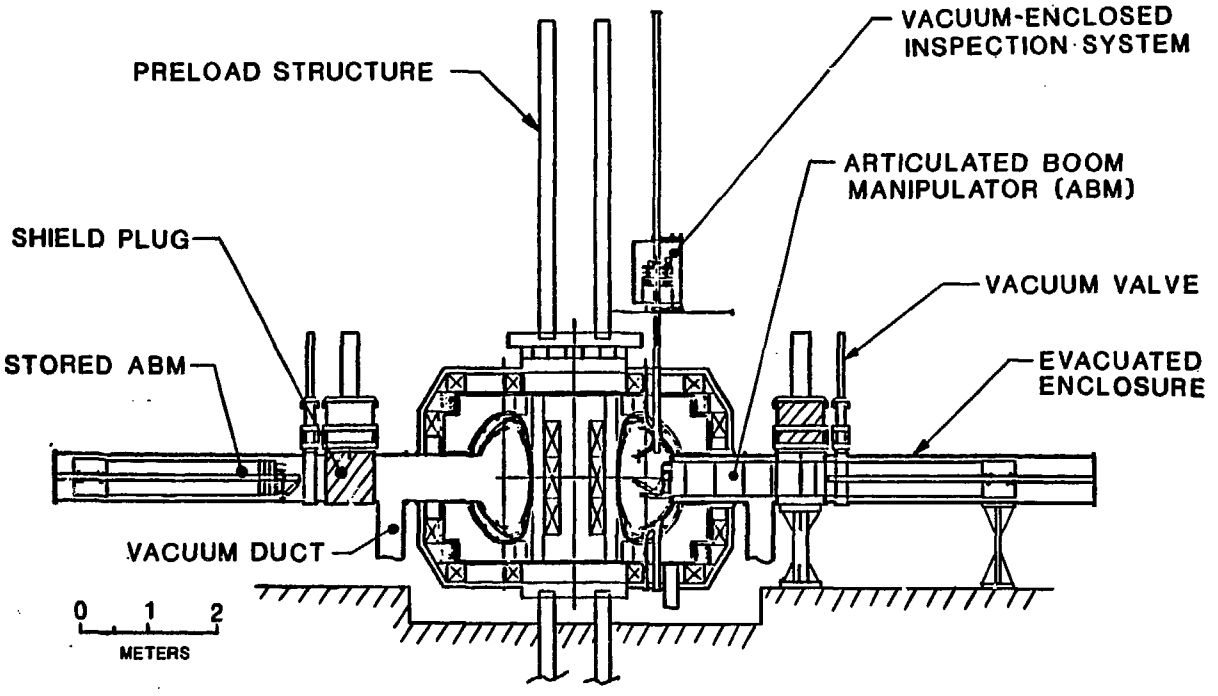

- 2 10 CM PORTS FOR INSPECTION
- SHIELDED VACUUM ENCLOSURE

EX-VESSEL OPERATIONS ARE PRIMARILY ACCOMPLISHED USING AN OVERHEAD BOOM MOUNTED MANIPULATOR

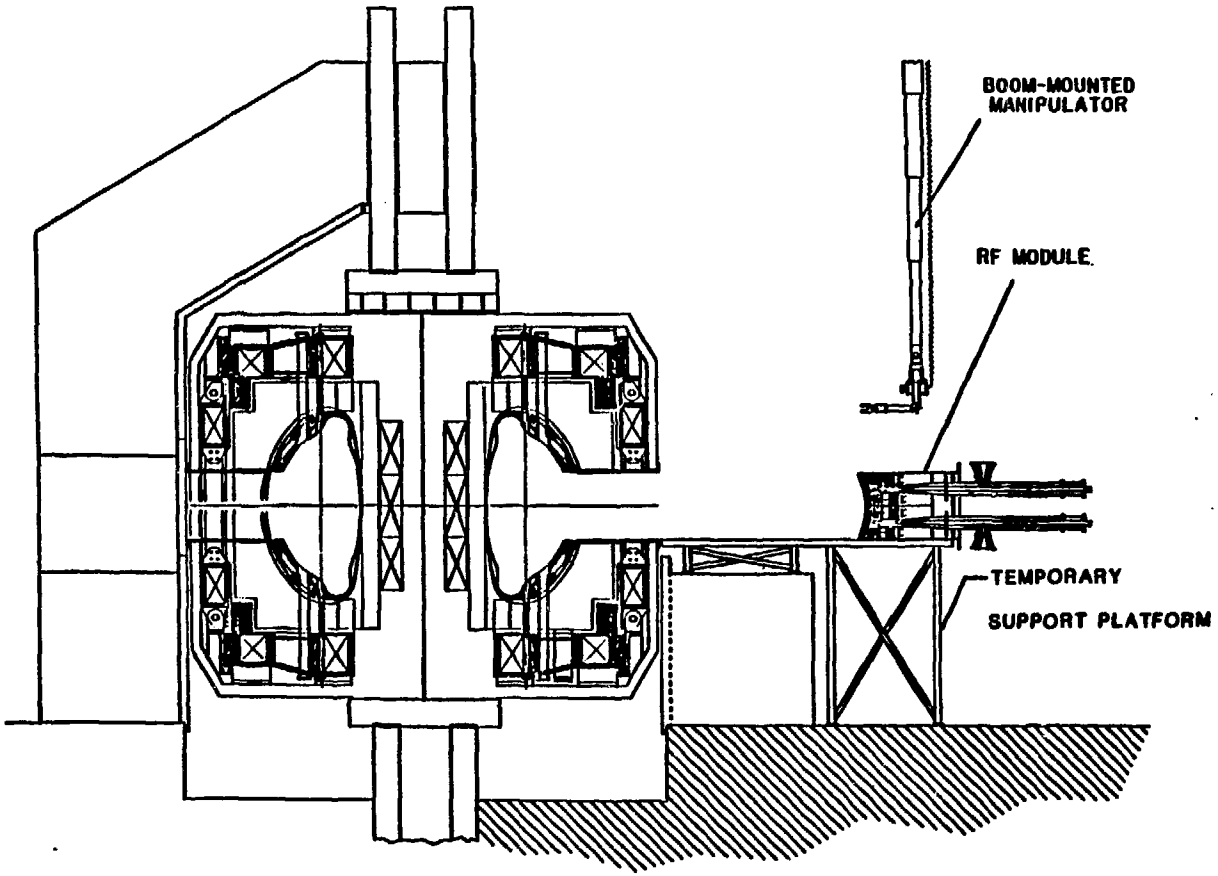

RF MODULE

- REMOVE SHIELD
- INSTALL PLATFORM
- EXTRACT MODULE
- REPLACE FARADAY SHIELD/ANTENNAE

MANY EX-VESSEL OPERATIONS INITIALLY USE PERSONNEL TO DECOUPLE INTERFACES AND SET UP REMOTE EQUIPMENT

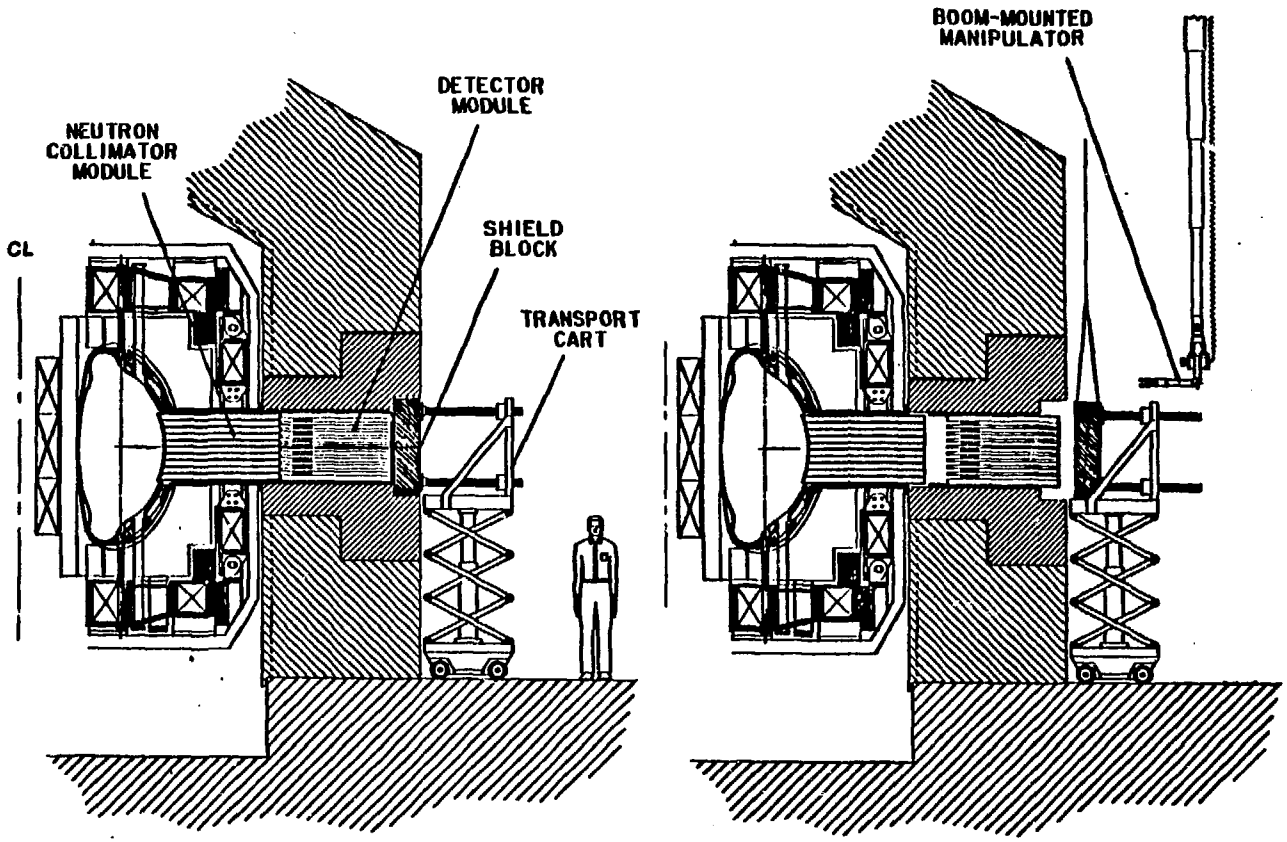

EX-VESSEL INSPECTIONS REQUIRE A SURVEILLANCE ROBOT IF THE CLOSE-PROXIMITY SHIELD IS DISASSEMBLED

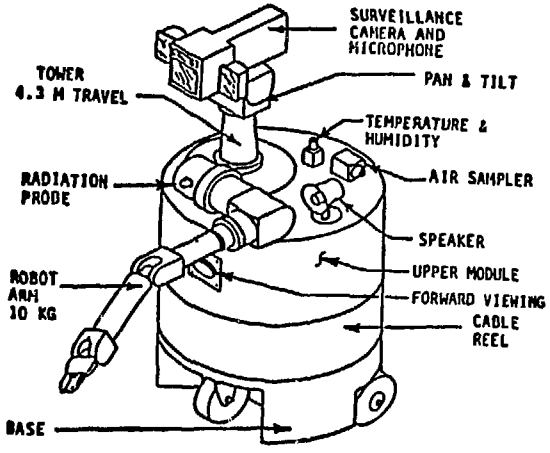

SURVEILLANCE ROBOT

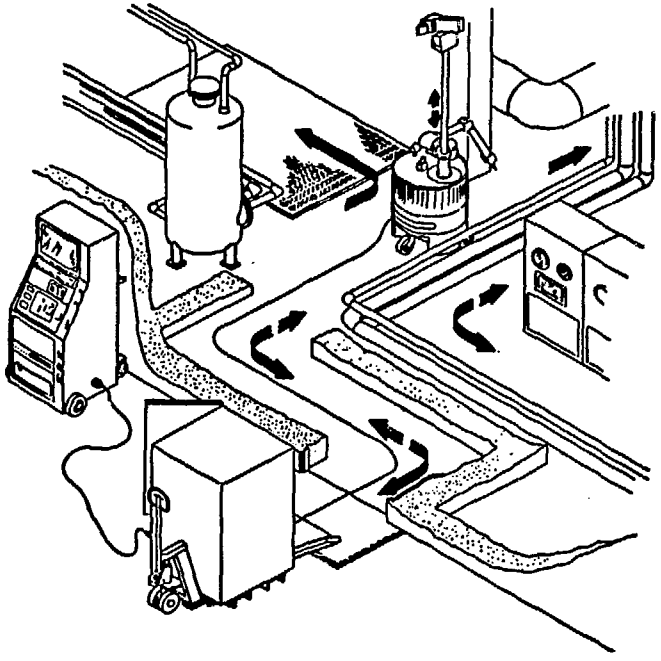

MOBILITY AND NUMEROUS SENSORS

MAINTENANCE RELATED FACILITIES INCLUDE THE TEST CELL, DECONTAMINATION CELL, HOT CELL, WARM CELL, AND THE FABRICATION, ASSEMBLY AND MOCKUP (FAM) BUILDING

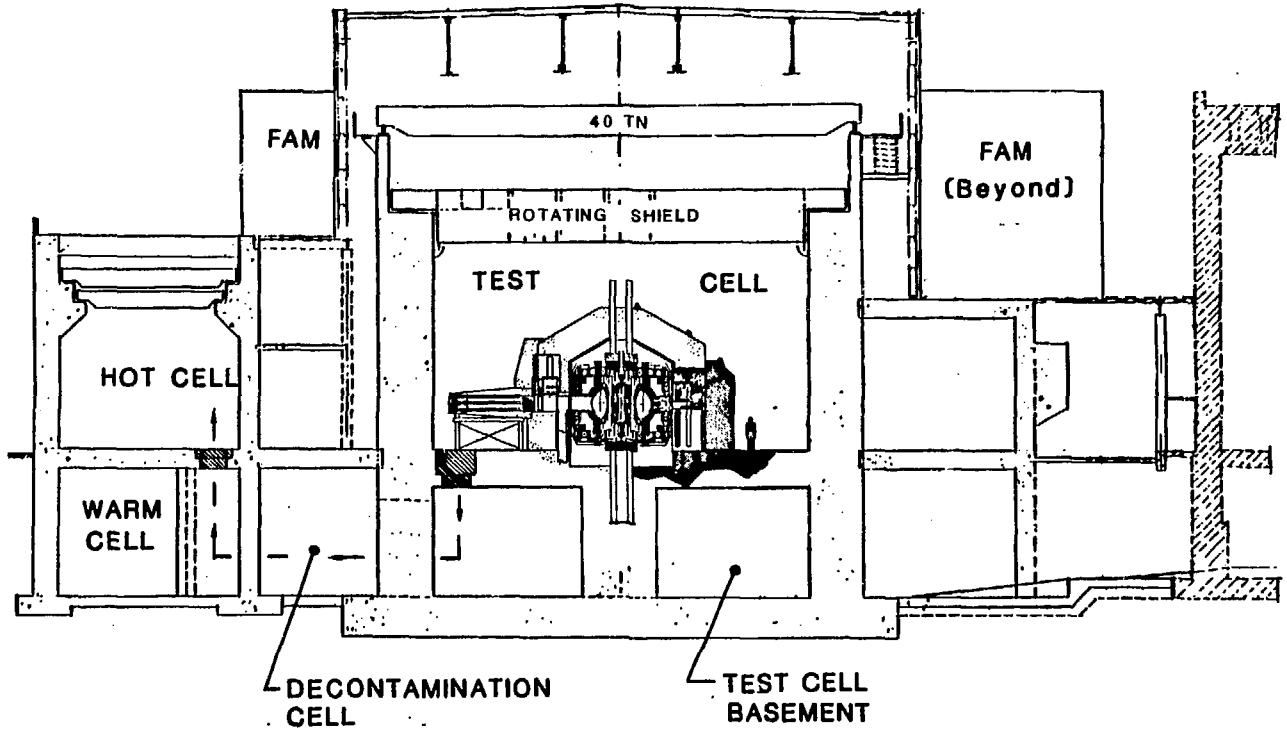

THE MAINTENANCE DEVELOPMENT SCHEDULE IS AMBITIOUS AND DOABLE

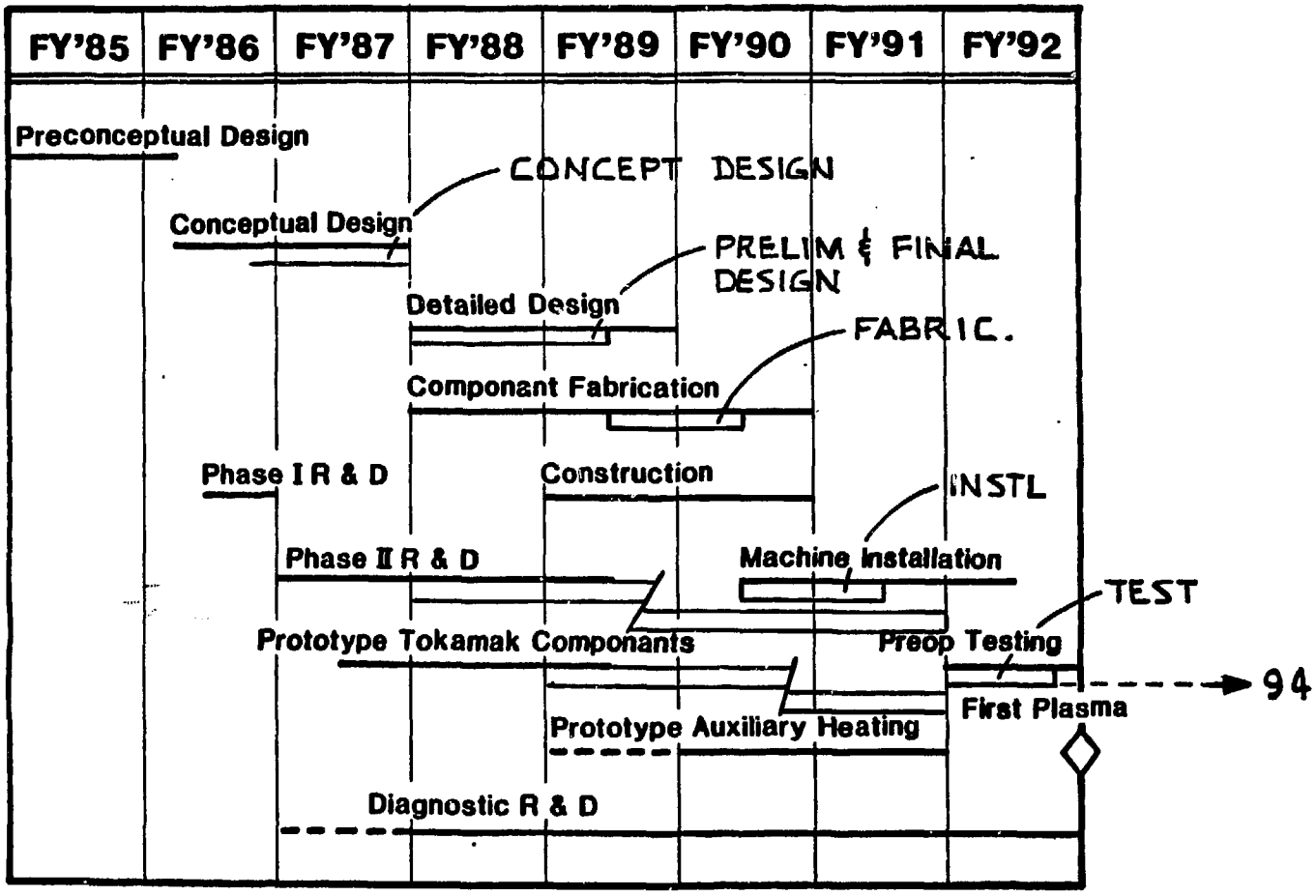

DISASSEMBLY AND MAINTENANCE HAVE BEEN KEY FACTORS IN DESIGNING THE CIT REACTOR
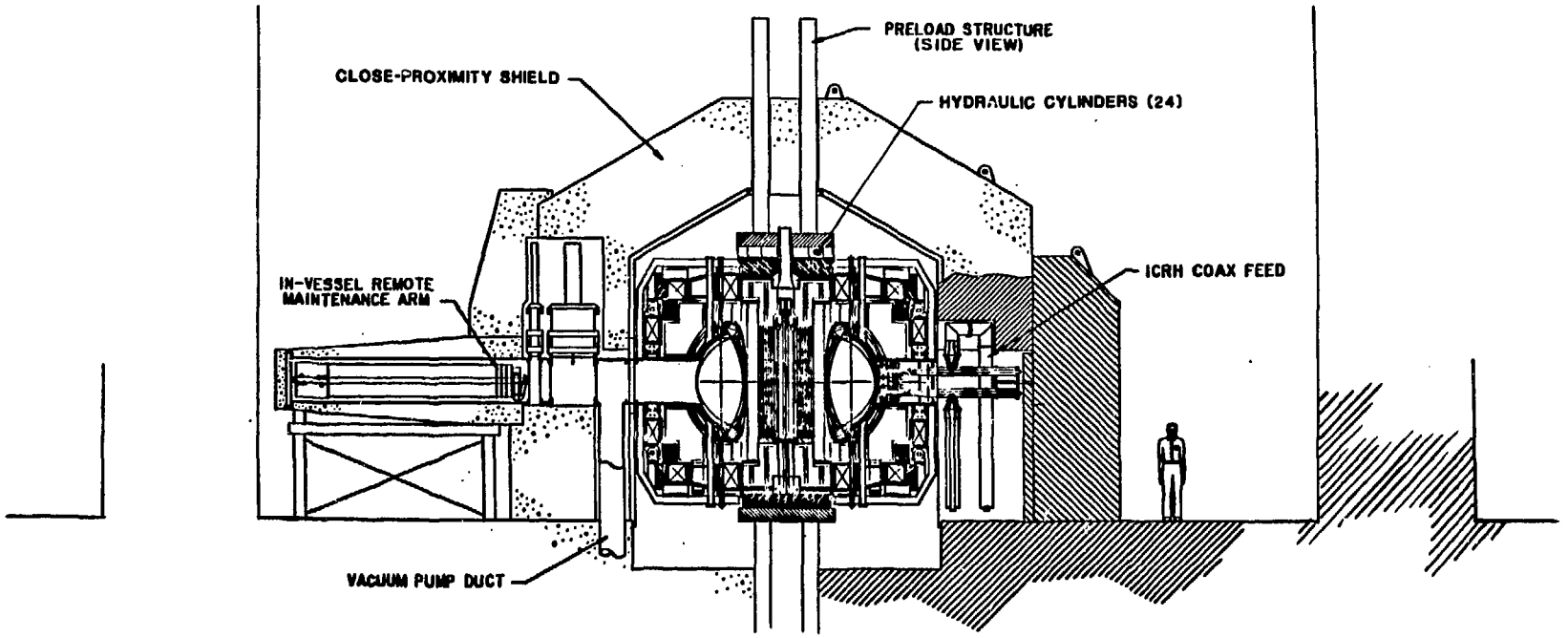
- ALL-REMOTE REMOTE OPERATIONS WITHIN THE CLOSE-PROXIMITY SHIELD
- A MIX OF PERSONNEL ACCESS AND REMOTE OPERATIONS WITHIN THE TEST CELL
- SHIELDED FACILITIES
- ADVANCED DESIGN AND R&D BEGIN IN FY87, FIRST PLASMA IN 1992