ANL/ASD/CP-92294

IN SITU MEASUREMENT OF CERAMIC VACUUM CHAMBER CONDUCTIVE COATING QUALITY

CONF-970503--

C. Doose, K. Harkay, S. Kim and S. Milton
Advanced Photon Source, Argonne National Laboratory
9700 South Cass Avenue, Argonne, Illinois 60439 USA

Abstract

A method for measuring the relative surface resistivity and quality of conductive coatings on ceramic vacuum chambers was developed. This method is unique in that it allows one to test the coating even after the ceramic chamber is installed in the accelerator and under vacuum; furthermore, the measurement provides a localized surface reading of the coating conductance. The method uses a magnetic probe of wire wound on a ferrite and an LCR meter. The probe is calibrated using the measured DC end-to-end resistance of the tube under test and by comparison to a high quality test surface. The measurement method has also been verified by comparison to high frequency impedance measurements. A detailed description, results, and sensitivity of the technique are given here.

1 INTRODUCTION

The Advanced Photon Source (APS) is a national facility dedicated to the generation of highly-brilliant X-rays for use in scientific and industrial research [1]. The facility consists of four machines: a linear accelerator capable of generating 450-MeV positrons, a positron accumulator ring, a booster synchrotron for accelerating the positron beam up to 7 GeV, and the 7-GeV storage ring. The three circular machines use fast-pulsed kicker magnets for injection, extraction, and beam diagnostics. Ceramic vacuum chambers, coated internally with a conductive material, are used at the location of these kicker magnets. The conductivity of the coating is adjusted to allow the kicker magnetic fields to penetrate the vacuum chamber wall while at the same time providing a relatively low resistance path for the beam image charges.

Two storage ring kicker vacuum chambers overheated during the first high-beam current runs of 100 mA. It quickly became clear that the conductivity of the ceramic chamber coatings was either damaged or significantly lower than desired. Since these chambers were installed in an operational machine, a new method to measure their conductivity in situ was developed in order to test the coatings without opening the ring vacuum system.

2 CONDUCTIVE COATING ON CERAMIC CHAMBER

A typical ceramic vacuum chamber for the storage ring is made of 99.7% pure alumina. Figure 1 shows a typical cross section of the chamber, with a sensor coil on top. The chamber has a wall thickness of 3.2 mm, an axial length of 74 cm, and an inner circumference of approximately 23 cm. Details of the chamber and coating procedure are described in reference [2].

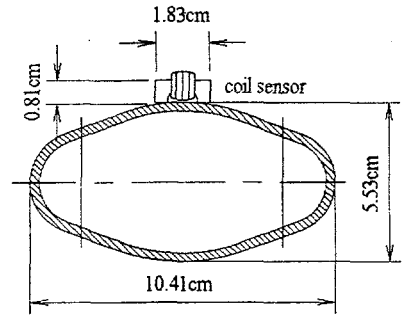

Figure 1: Ceramic chamber cross section showing the sensor coil.

The coatings of the ceramic vacuum chambers are subjected to both eddy currents due to the kickers' pulsed magnetic fields, and the beam image currents. A compromise is needed in coating thickness and conductivity in order to adequately conduct image currents while not significantly shielding the kicker magnetic field. If care is not exercised in the selection of the conductivity, the power and current densities can become quite high and damage the coating or ceramic. The choices of conductivity and thickness of the coatings used on the ceramics were based on a number of factors, with the first being a minimization of the power density seen by the coating. After arriving at this initial value, the conductivity was adjusted to insure that the impact on machine performance or the kicker magnet field itself were not seriously compromised [2], or approaching any damage threshold of the coating.

The coating chosen for the storage ring ceramic vacuum chambers is a resistor paste commonly used in the semiconductor industry, Heraeus Cermalloy type 410 resistor material. The paste when applied and sintered as per the application specification, has a surface resistivity of 0.1 Ω/square, and a bulk resistivity of 2×10^{-6} Ω-m.

DISTRIBUTION OF THIS DOCUMENT IS UNLIMITED

The submitted manuscript has been created by the University of Chicago as Operator of Argonne National Laboratory ("Argonne") under Contract No. W-31-109-ENG-38 with the U.S. Department of Energy. The U.S. Government retains for itself, and others acting on its behalf, a paid-up, nonexclusive, irrevocable worldwide license in said article to reproduce, prepare derivative works, distribute copies to the public, and perform publicly and display publicly, by or on behalf of the Government.

MASTER

DISCLAIMER

This report was prepared as an account of work sponsored by an agency of the United States Government. Neither the United States Government nor any agency thereof, nor any of their employees, make any warranty, express or implied, or assumes any legal liability or responsibility for the accuracy, completeness, or usefulness of any information, apparatus, product, or process disclosed, or represents that its use would not infringe privately owned rights. Reference herein to any specific commercial product, process, or service by trade name, trademark, manufacturer, or otherwise does not necessarily constitute or imply its endorsement, recommendation, or favoring by the United States Government or any agency thereof. The views and opinions of authors expressed herein do not necessarily state or reflect those of the United States Government or any agency thereof.

DISCLAIMER

Portions of this document may be illegible in electronic image products. Images are produced from the best available original document.

Given the dimensions of the ceramic chamber the DC end-to-end resistance is roughly 0.3 Ω when the coating is properly applied.

3 MEASUREMENT SYSTEM AND CALIBRATION

The sensor coil shown in Figure 1 is essentially a metal detector. It was constructed to provide a means to measure the local surface resistivity of the coating with the ceramic vacuum chamber still installed in the ring. The sensor consists of a 200-turn coil wound on the bottom of a "U" shaped ferrite core 2.86 cm long, 1.83 cm wide, and 0.81 cm high. Because the coil is effectively an eddy current sensor, the geometry of the core was chosen in an attempt to maximize the magnetic coupling between the coil and the coating. It was found that high-Q sensor coils, although more sensitive, had poor measurement stability. The use of manganin wire, with a resistance of 11.8 Ω/m and a diameter of 200 μm, "de-Q'd" the sensor coil and so improved the stability of the measurements. Also, because of its' relatively low temperature coefficient of resistivity, the use of manganin wire improved temperature stability of the AC resistance measurements compared to the use of copper wire.

The sensor coil is placed on the exterior surface of the ceramic chamber, and an AC signal (100 kHz, 1 V rms) is applied to the sensor coil using a Hewlett Packard 4263A LCR meter. By comparison, the effective frequency of the pulsed kickers is 143 kHz (3.5 μsec pulse-width). The AC field generated by the coil penetrates the conductive coating and creates eddy currents. The induced eddy currents, in turn, create a field that opposes the driving coil field. The change in effective impedance of the sensor coil, when coupled to the coating, is equivalent to adding a series impedance (coupled impedance) to the sensor coil. The measured impedance of the coil is then the nominal coil impedance (the ACR is 200 Ω and XL is 2.3 kΩ at 100 kHz) plus the coupled impedance Z_c. For coating thickness less than approximately one tenth of the skin depth at the measurement frequency, the eddy current density is essentially uniform throughout the coating, and the coupled resistance, R_c, is therefore proportional to the surface conductivity. Due to the local extent of the sensor coil field, approximately 28 cm^2, compared to the area to be measured of 1732 cm^2, the method makes it possible to measure the local surface resistivity of the chamber coating and so map out the quality of the coating over the entire ceramic surface.

The equivalent circuit of the sensor coil coupled to a conductor is shown in Figure 2. The resistive and reactive components of the coupled impedance due to a conductor are given by:

$$R_c = \frac{R_2 \cdot (\omega \cdot M)^2}{R_2^2 + (\omega \cdot L_2)^2}$$

$$X_c = -j\omega \cdot \left[\frac{L_2 \cdot (\omega \cdot M)^2}{R_2^2 + (\omega \cdot L_2)^2} \right]$$

where R_2 and L_2 are the effective resistance and inductance of the coating. The mutual inductance, M, is a function of coil geometry, distance from the coil to the conductor, and conductor thickness.

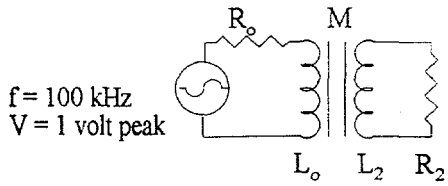

Figure 2: Schematic of sensor coil coupled to a conductor.

Measurements were performed to confirm the linearity of the measured coupled resistance to surface resistivities near 0.1 Ω/square. The coupled resistance and reactance were measured for different thickness of stainless steel sheets. The surface resistivity of a 12.7 μm sheet, using a bulk-resistivity of $\rho = 7\times10^{-7}$ Ωm, is approximately 0.06 Ω/square (60 % of the desired value of the chamber coating). As shown in Figure 3, the increase of the coupled resistance is approximately linear to the thickness of the sheets, with a slope of 2.7 Ω/μm for thickness less than 100 μm. This is equivalent to surface resistivities of greater than 0.007 Ω/square.

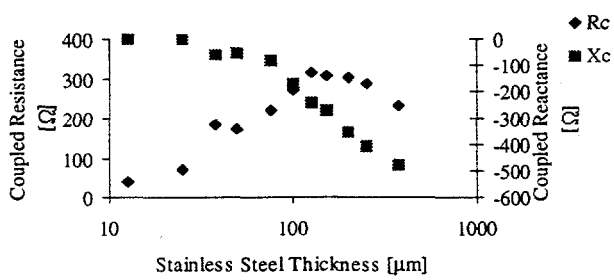

Figure 3: Measurement of coupled impedance vs. stainless steel sheet thickness.

To determine the effects of chamber wall thickness variations on the coupled resistance, measurements were performed to determine the sensitivity to height above a 12.7-μm-thick stainless steel sheet. Figure 4 shows the relationship of the coupled resistance vs. height above the sheet. The measured coupled resistance in the region within 3 mm of the sheet falls off at a rate of roughly 7 Ω/mm. With a measurement resolution of 1 Ω and a coating surface resistivity of 0.1 Ω/square the system is insensitive to ceramic vacuum chamber wall thickness variations of less than approximately 0.3 mm.

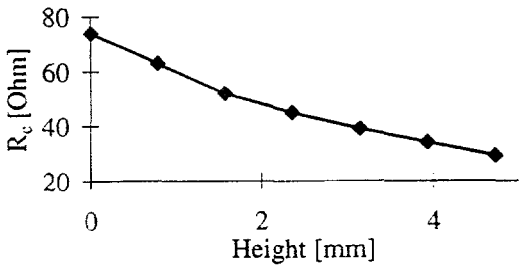

Figure 4: Measurement of the coupled resistance vs. height above a 12.7-μm stainless steel sheet.

Coupled resistance measurements of the coating on a good quality chamber (reference chamber) were compared to measurements of the installed chamber coatings. The reference chambers' end-to-end DC resistance was known to be 0.4 Ω ±0.05 Ω. The average coupled resistance value for the reference chamber was 13 Ω with a standard deviation of 2.5 Ω. Given the end-to-end DC resistance and the chamber geometry, an average surface resistivity of 0.13 Ω/square (with an uncertainty of ±10%) was calculated for the reference chamber. The maximum surface resistivity measurable with this system when the coil is 3 mm from the coating surface is approximately 1.3 Ω/square.

4 CERAMIC CHAMBER MEASUREMENTS

In situ measurements on the suspect ceramic vacuum chambers using the sensor coil revealed the cause of the heating to be a lack of sufficient conductive coating. In fact, the coating surface resistivity was so large on two chambers that it was beyond the measurement resolution of the sensor coil system. After removal from the storage ring it was found that the end-to-end DC resistance of one chamber was greater than 1 MΩ. The second chamber's DC resistance was 320 Ω, these are to be compared to the desired value of 0.3 Ω.. Measurements on new spare chambers, before their installation into the machine, revealed another defect, and that was uneven coating along the length of the chamber as shown in Figure 5. This was caused due to sagging of the liquid coating during the initial curing process of the coating on the chamber (the chamber had been mounted vertically). After correcting the sagging problem, subsequent chamber coating quality has met design requirements as shown in Figure 6.

The sensor coil results were also verified on the bench using a high-frequency transmission measurement. Probes were inserted through plates on either end of the chamber to form a cavity and a network analyzer was used to excite the cavity modes. The widths, or quality factors, of these modes are determined by the surface resistivity of the chamber coating and the volume and surface area of the cavity. The calculated surface

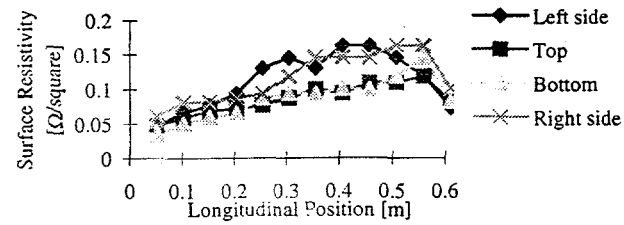

Figure 5: Uneven coating surface resistivity.

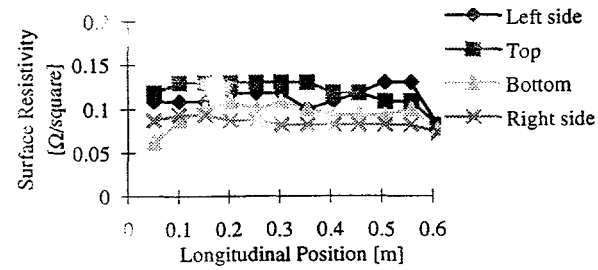

Figure 6: Relatively even coating surface resistivity.

resistivity for the chamber depicted in Figure 6 is between 0.06 and 0.3 Ω/square. The surface resistivity for the two defective storage ring chambers was more than a factor of 200 higher.

5 SUMMARY

Using readily available materials and laboratory equipment a simple detector was constructed which allowed in situ measurements and surface quality mapping of the conductively coated ceramic chambers used in the APS machines. Its use revealed problems with some of the chambers used in the storage ring. It was also used for new chamber quality control. The measurement system is simple, non-invasive and inexpensive; however, at present our implementation is somewhat crude and could be optimized to increase the sensitivity for a particular type of coating and application.

6 ACKNOWLEDGMENTS

The Authors wish to thank Klaus Halbach for his insight. D. Erickson, J. Pace, and C. Putnam for all their help related to the ceramic vacuum chamber assemblies, and J. Song for his assistance with the high frequency measurments. This work was supported by the U.S. Department of Energy, Office of Basic Energy Sciences, Under Contract No. W-31-109-ENG-38

REFERENCES

[1] "7-Gev Advanced Photon Source Conceptual Design Report," Argonne National Laboratory, ANL-87-15, 1987.

[2] S. Milton, D. Warner, "The APS Ceramic Chambers," EPAC'94 pp. 2494-2496