By acceptance of this article, the publisher or recipient acknowledges the U.S. Government's right to retain a nonexclusive, royalty-free license in and to any copyright covering the article.

CONF-8605139--3

CONF-8605139--3

DE86 011758

MINIMARS MAINTENANCE*

P. T. Spampinato

*Research sponsored by the Office of Fusion Energy, U.S. Deparmtent of Energy, under Contract DE-AC05-84OR21400 with Martin Marietta Energy Systems, Incorporated.

DISCLAIMER

This report was prepared as an account of work sponsored by an agency of the United States Government. Neither the United States Government nor any agency thereof, nor any of their employees, makes any warranty, express or implied, or assumes any legal liability or responsibility for the accuracy, completeness, or usefulness of any information, apparatus, product, or process disclosed, or represents that its use would not infringe privately owned rights. Reference herein to any specific commercial product, process, or service by trade name, trademark, manufacturer, or otherwise does not necessarily constitute or imply its endorsement, recommendation, or favoring by the United States Government or any agency thereof. The views and opinions of authors expressed herein do not necessarily state or reflect those of the United States Government or any agency thereof.

MASTER

DISTRIBUTION OF THIS DOCUMENT IS UNLIMITED

MINIMARS MAINTENANCE

P. T. SPAMPINATO/FUSION ENGINEERING DESIGN CENTER
Y. LI/UNIVERSITY OF WISCONSIN

- MAINTENANCE PHILOSOPHY
- FACILITY REQUIREMENTS
- CENTER OPERATIONS
- END CELL OPERATIONS

MAINTENANCE PHILOSOPHY

ALL MAINTENANCE IN THE VAULT IS BASED ON REMOTE OPERATIONS USING MANIPULATOR SYSTEMS AND THE OVERHEAD CRANE AS THE PRIMARY MEANS OF REPAIR OR REPLACEMENT

- PERSONNEL DO NOT HAVE ACCESS TO THE VAULT
- NEUTRON AND GAMMA SHIELDING ON THE REACTOR IS FOR THE PROTECTION OF SUPERCONDUCTING MAGNETS
- REMOTE OPERATIONS IN THE VAULT MAY PROCEED IMMEDIATELY AFTER DEENERGIZING ALL ELECTOMAGNETIC EQUIPMENT
- REMOTE OPERATIONS WITHIN THE REACTOR MAY PROCEED AFTER WARMING THE COILS (130 H)

FACILITY REQUIREMENTS

MAINTENANCE RELATED FACILITY REQUIREMENTS FOCUS ON THE VAULT, THE DECONTAMINATION CELL, AND THE HOT CELL

- RIGHT-OF-WAY AREA ALONG ONE SIDE OF VAULT TO TRANSPORT CENTER CELL MODULES USING THE O/H CRANE
- DECON CELL SEPARATES THE VAULT AND HOT CELL AND SERVES AS CRANE STORAGE
- THE DECON CELL AND THE HOT CELL ARE SIZED TO HANDLE PAIRS OF CENTER CELL MODULES
- THE HOT CELL HAS FOUR WORK STATIONS; TWO FOR SPENT BLANKET MODULES, TWO FOR REPLACEMENT BLANKET MODULES

CENTER CELL OPERATIONS

THE PRIMARY MAINTENANCE OPERATION IS REPLACEMENT OF THE CHOKE COIL INSERTS EVERY FOUR CALENDAR YEARS; THE SECONDARY OPERATION IS REFURBISHMENT OF THE CENTER CELL MODULES EVERY EIGHT CALENDAR YEARS

- REPLACEMENT OF CHOKE COIL INSERTS REQUIRES REMOVAL OF ONE ADJACENT CENTER CELL MODULE EXCEPT FOR THE EAST INSERT WHICH ALSO REQUIRES REMOVAL OF THE ICRH MODULE
- REPLACEMENT OF THE INSERT TAKES ~17 DAYS AND REQUIRES REMOVAL OF PART OF THE CHOKE COIL SHIELD AND THE USE OF A SPECIAL HANDLING FIXTURE
- CENTER CELL MODULES ARE DISASSEMBLED IN PAIRS AND TRANSPORTED SERIALLY WITH THE OVERHEAD CRANE
- REFURBISHING 24 CC MODULES TAKES APPROXIMATELY 40 DAYS

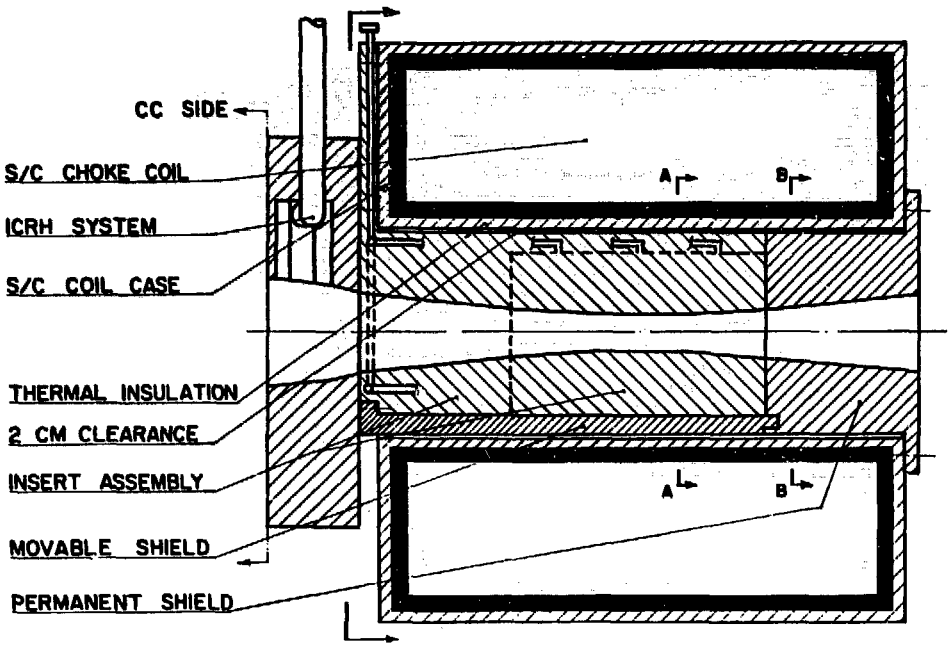

CHOKE COIL INSERT STRUCTURE (1)

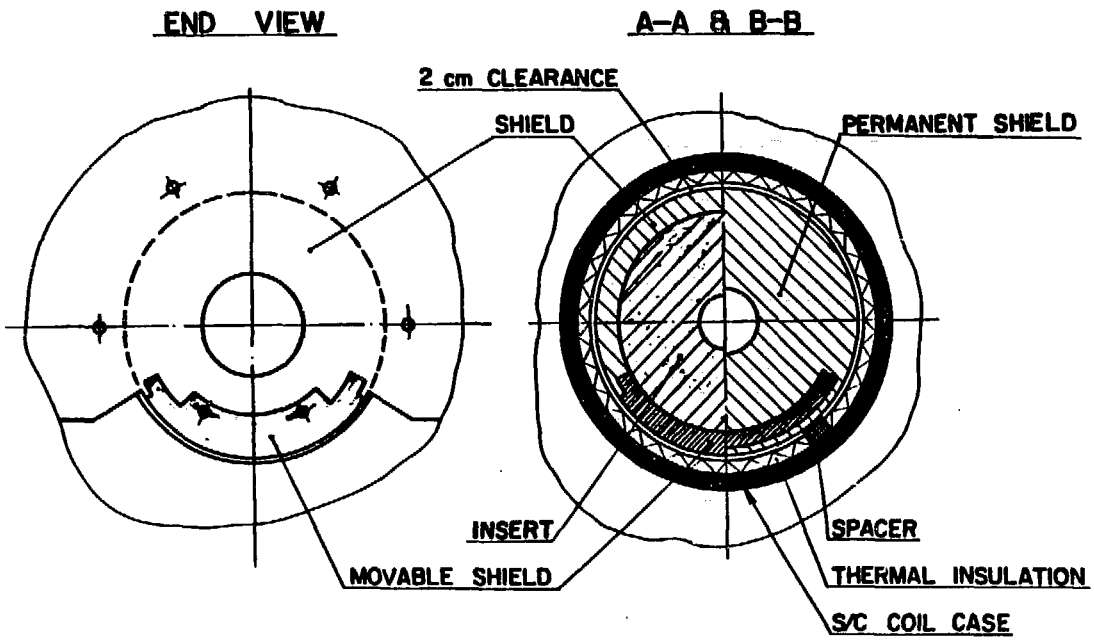

CHOKE COIL INSERT STRUCTURE (2)

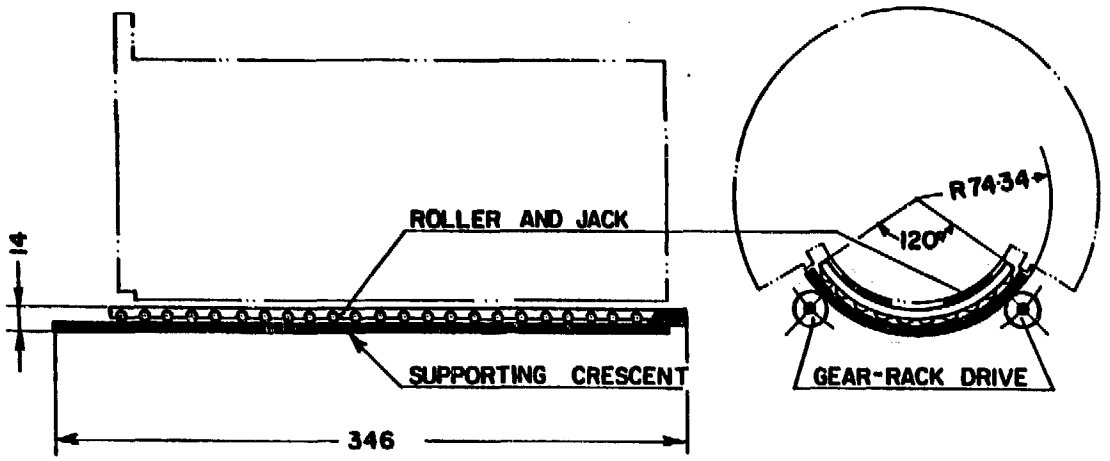

CHOKE INSERT MAINTENANCE CANOE

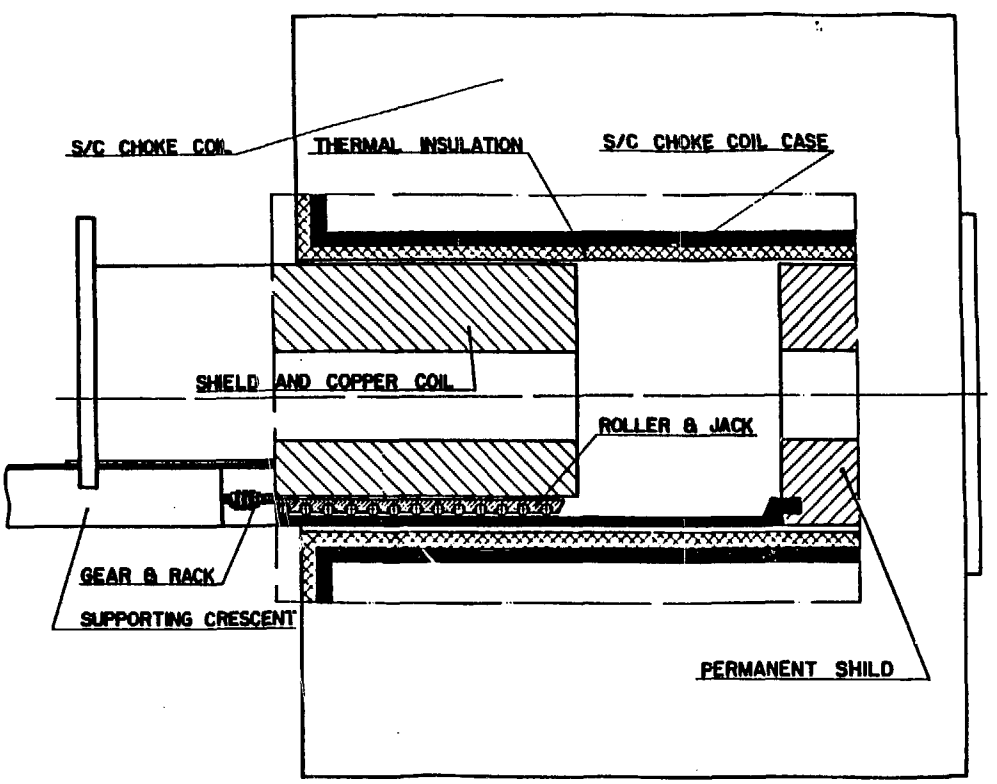

CHOKE COIL INSERT MAINTENANCE CONCEPT

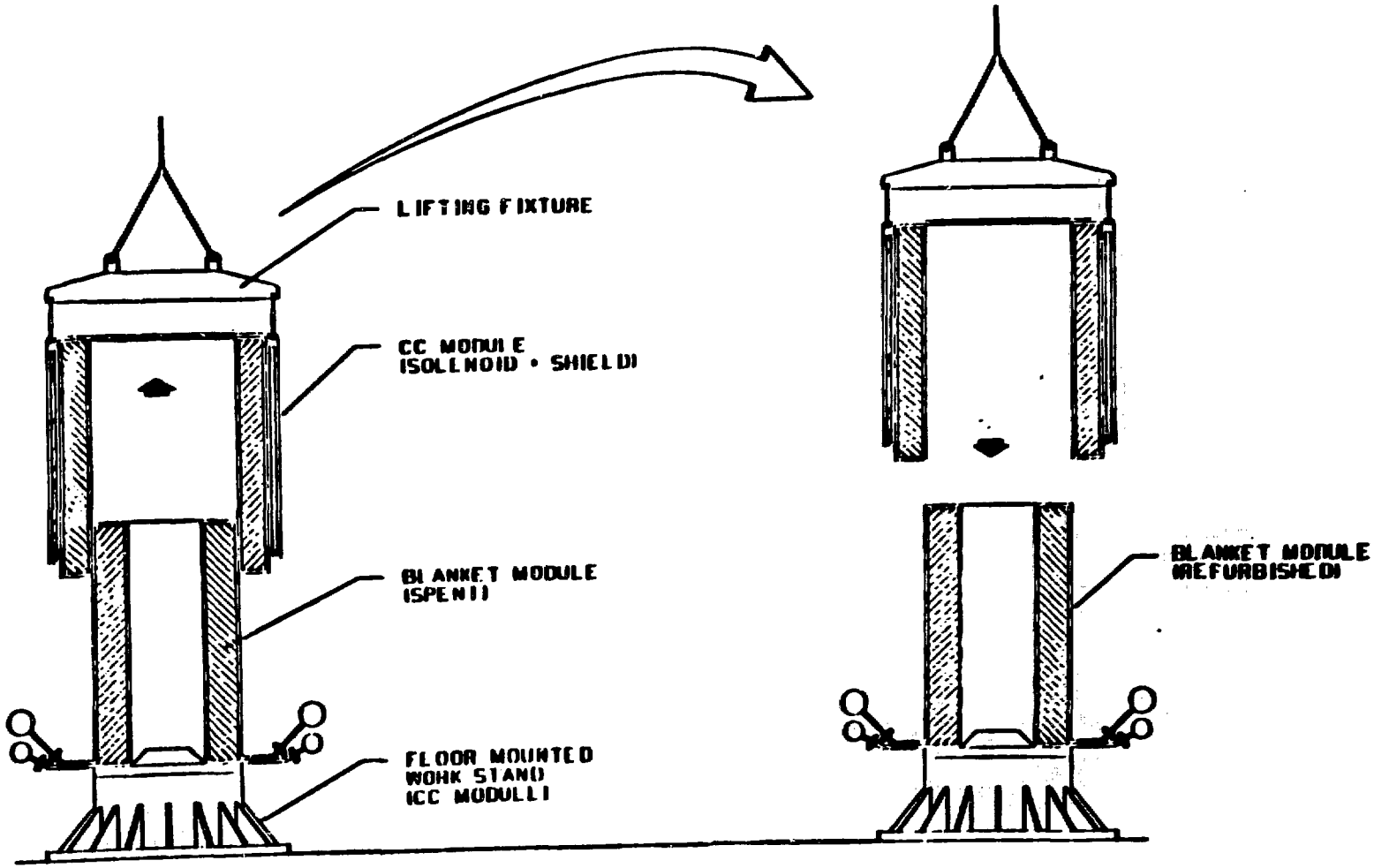

THE REUSABLE CENTER CELL MODULE (SOLENOID AND SHIELD) IS INSTALLED ONTO A NEW BLANKET MODULE ASSEMBLY

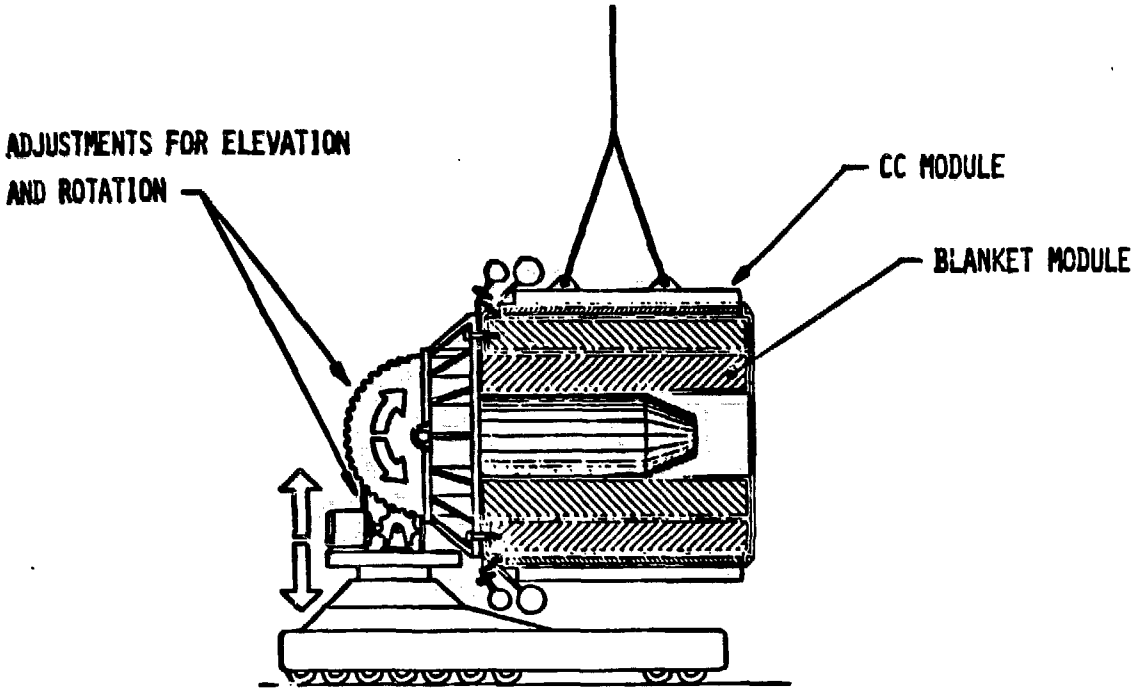

ROTATION FIXTURE FOR VERTICAL ORIENTATION OF CC MODULE

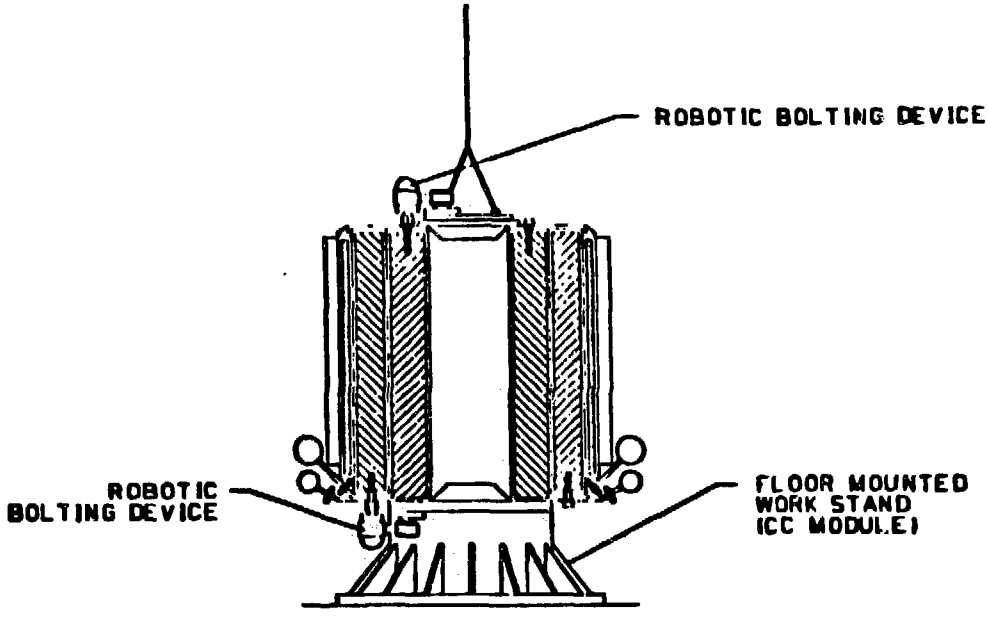

STRUCTURAL ATTACHMENTS BETWEEN THE BLANKET SUBMODULE AND THE CENTER CELL MODULE ARE REMOTELY REMOVED IN THE HOT CELL

END CELL OPERATIONS

THE END CELL CONTAINS TWO MAJOR MODULES, THE MAGNET MODULE (CONSISTING OF LARGE AND SMALL OCTOPOLES, MIRROR COILS, AND CHOKE COILS) AND THE DIRECT CONVERTOR/HALO SCRAPER

- MAGNET MODULE IS A LIFETIME COMPONENT (EXCEPT FOR THE INSERT) REMOVABLE THROUGH THE END CELL DOME
- THE DIRECT CONVERTOR IS ATTACHED TO THE END DOME AND IS REPLACED EVERY FIVE FPY