FUSION ENGINEERING DESIGN CENT

CONF-8505175--3

MODULAR TOKAMAK REACTOR CONFIGURATION*

CONF-8505175--3

DE85 016399

S. L. THOMSON

G. T. BUSSELL

T. G. BROWN

FUSION ENGINEERING DESIGN CENTER

TPSS PROJECT MEETING

ATLANTA, GEORGIA

MAY 16, 1985

DISCLAIMER

This report was prepared as an account of work sponsored by an agency of the United States Government. Neither the United States Government nor any agency thereof, nor any of their employees, makes any warranty, express or implied, or assumes any legal liability or responsibility for the accuracy, completeness, or usefulness of any information, apparatus, product, or process disclosed, or represents that its use would not infringe privately owned rights. Reference herein to any specific commercial product, process, or service by trade name, trademark, manufacturer, or otherwise does not necessarily constitute or imply its endorsement, recommendation, or favoring by the United States Government or any agency thereof. The views and opinions of authors expressed herein do not necessarily state or reflect those of the United States Government or any agency thereof.

*RESEARCH SPONSORED BY THE OFFICE OF FUSION ENERGY, U.S. DEPARTMENT OF ENERGY, UNDER CONTRACT DE-AC05-84OR21400 WITH MARTIN MARIETTA ENERGY SYSTEMS, INC.

By acceptance of this article, the publisher or recipient acknowledges the U.S. Government's right to retain a nonexclusive, royalty-free license in and to any copyright covering the article.

MASTER

DISTRIBUTION OF THIS DOCUMENT IS UNLIMITED

MODULAR TOKAMAK ELEVATION

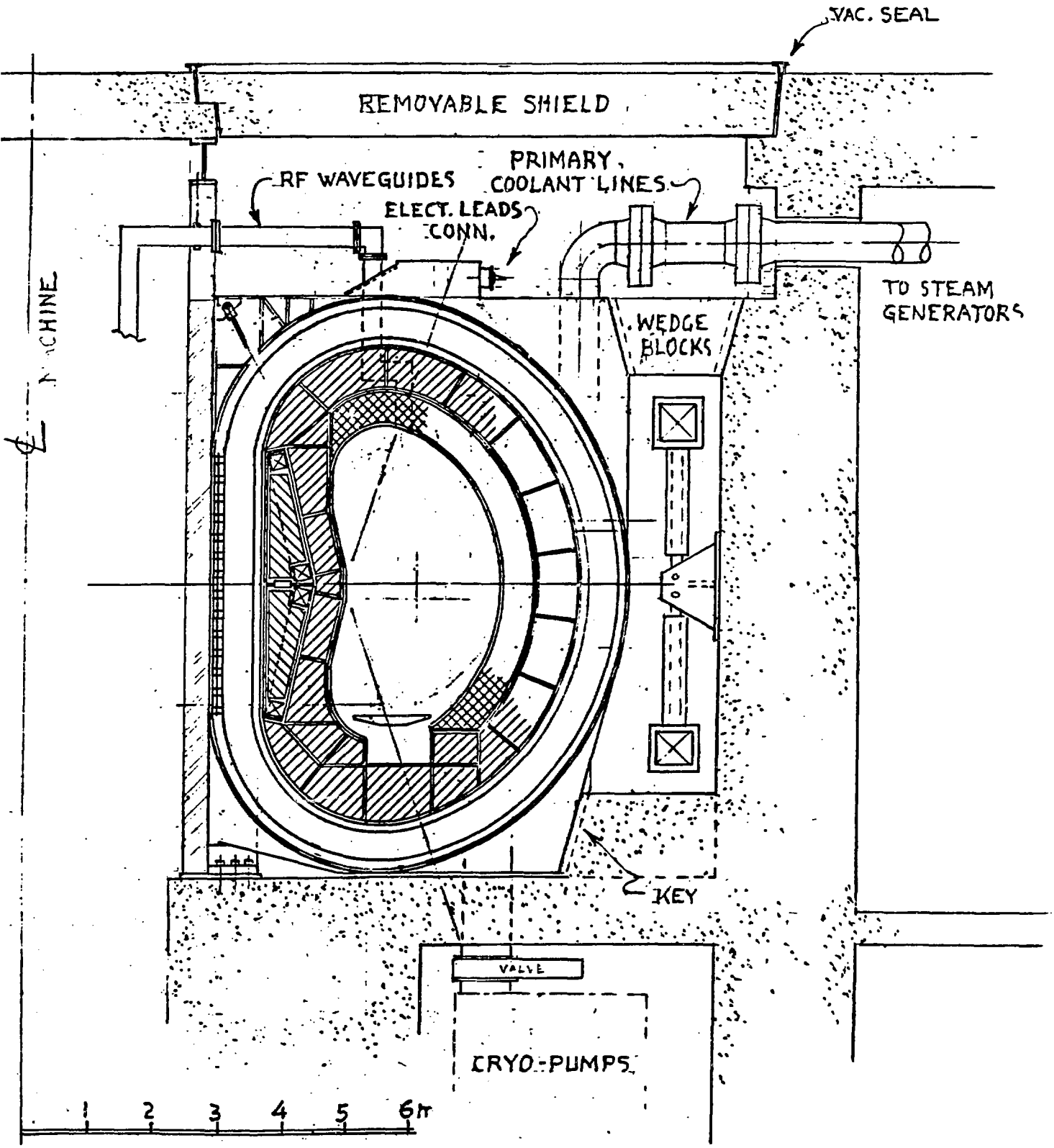

MODULAR TOKAMAK PLAN

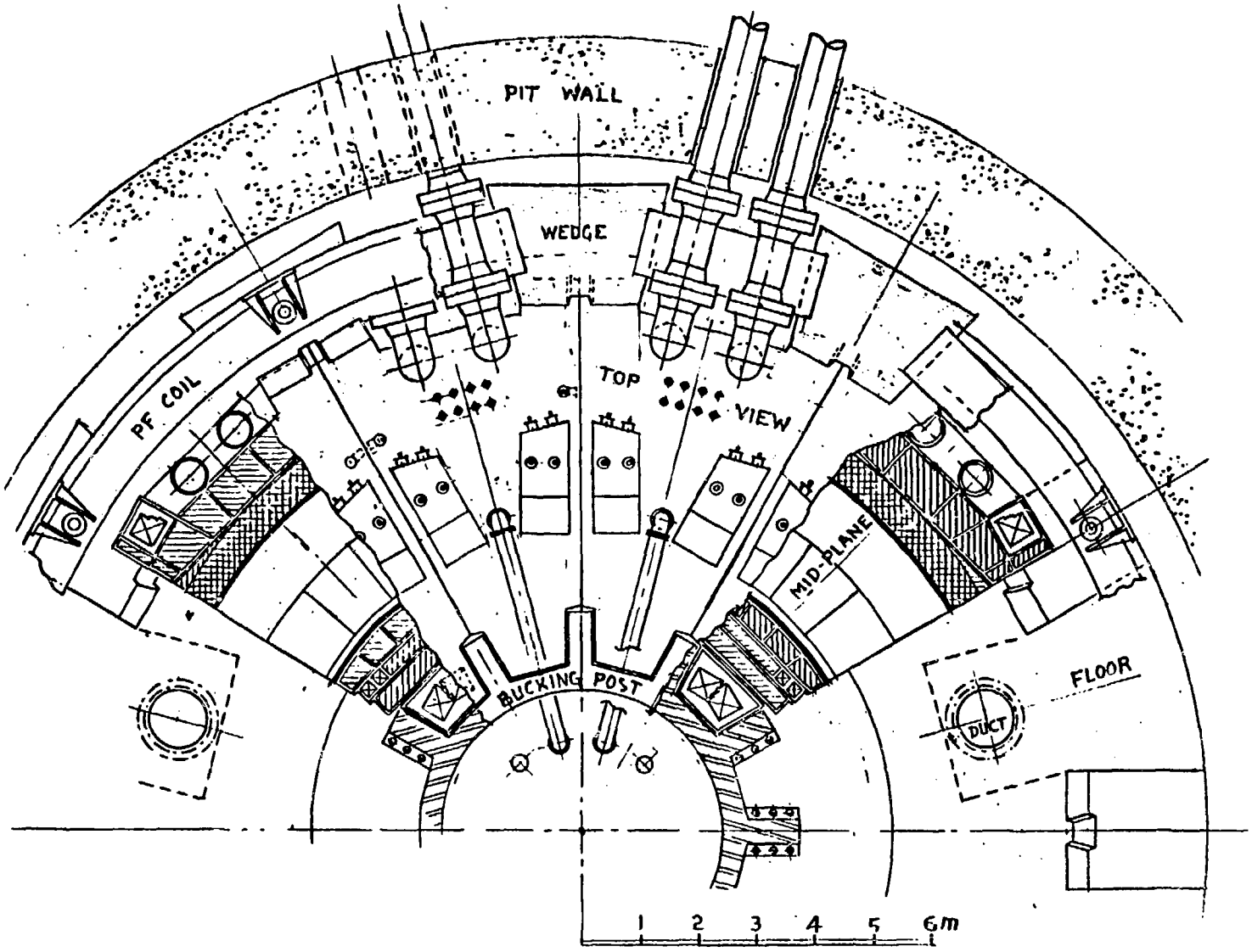

TOKAMAK POWER MODULE

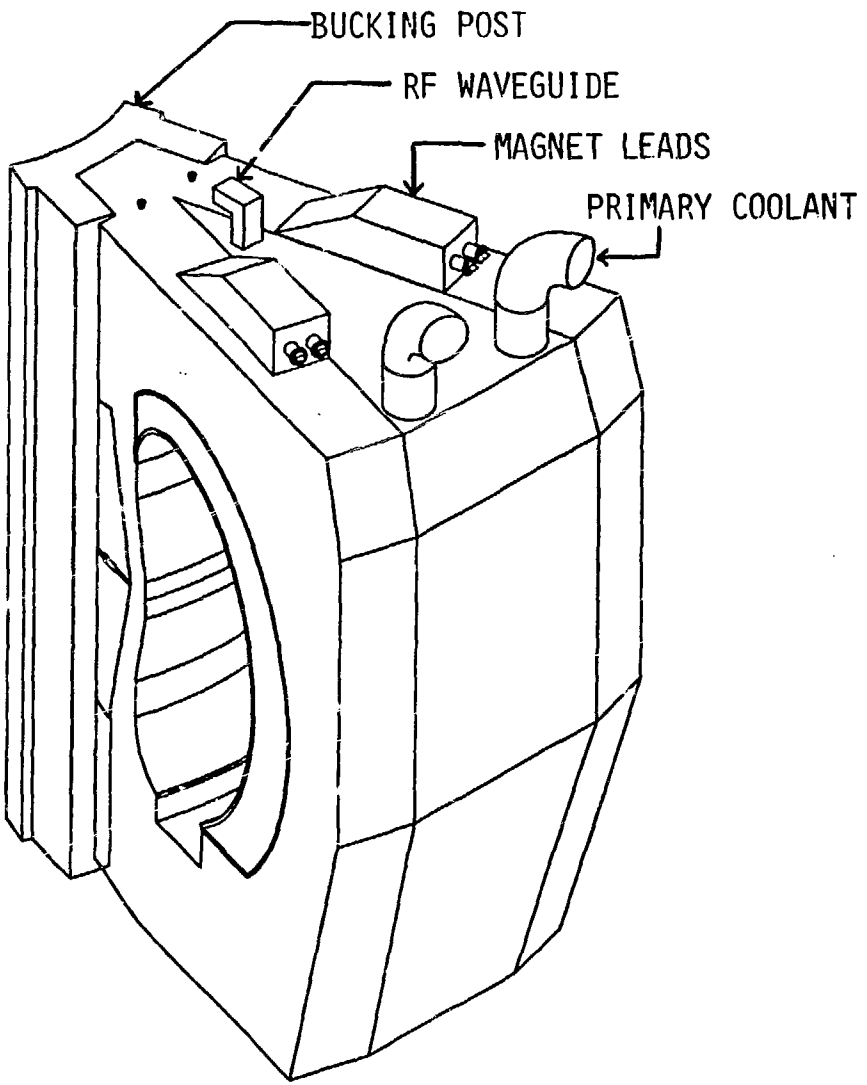

POWER MODULE DISASSEMBLY

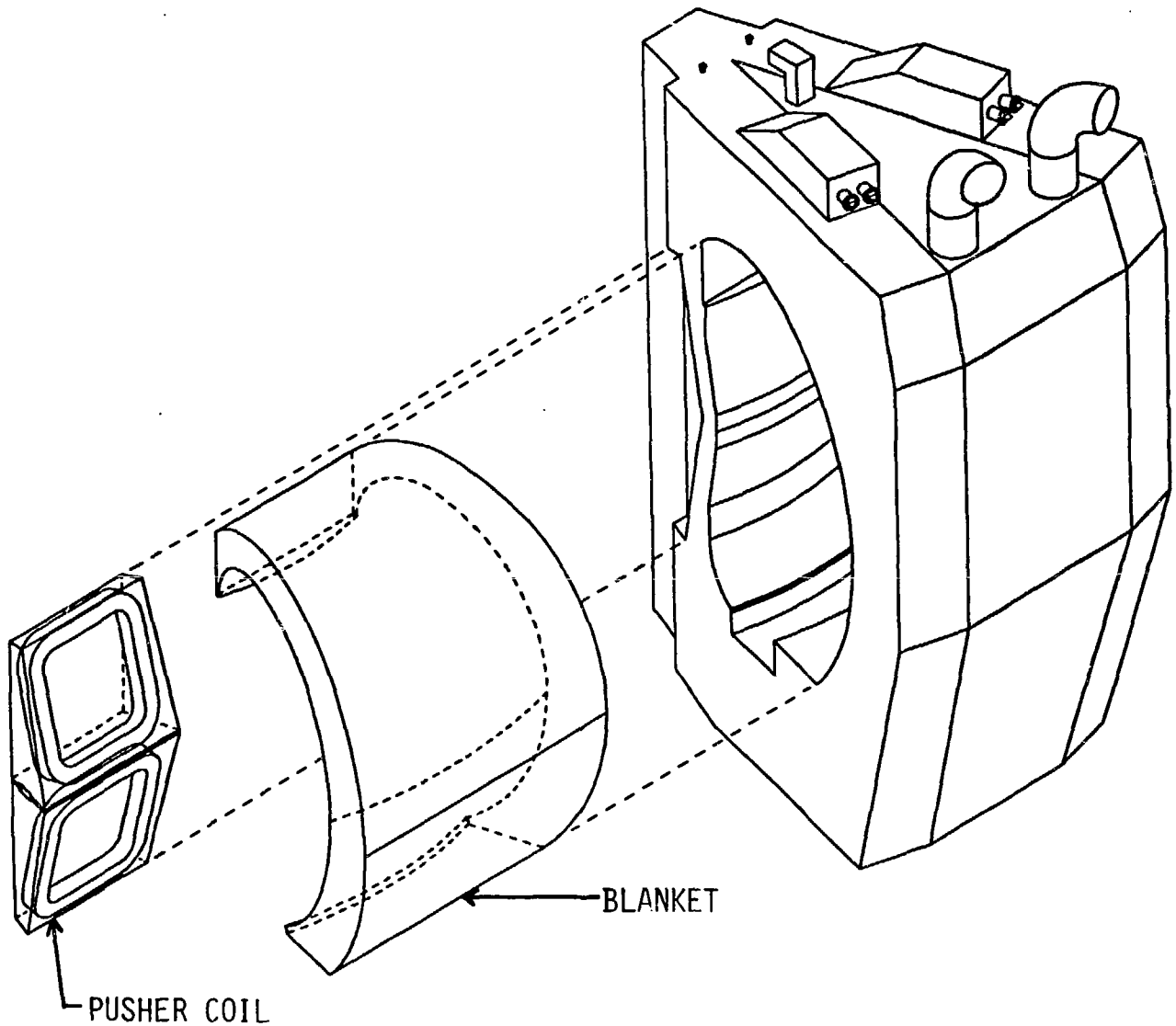

MODULAR TOKAMAK PIT CEILING

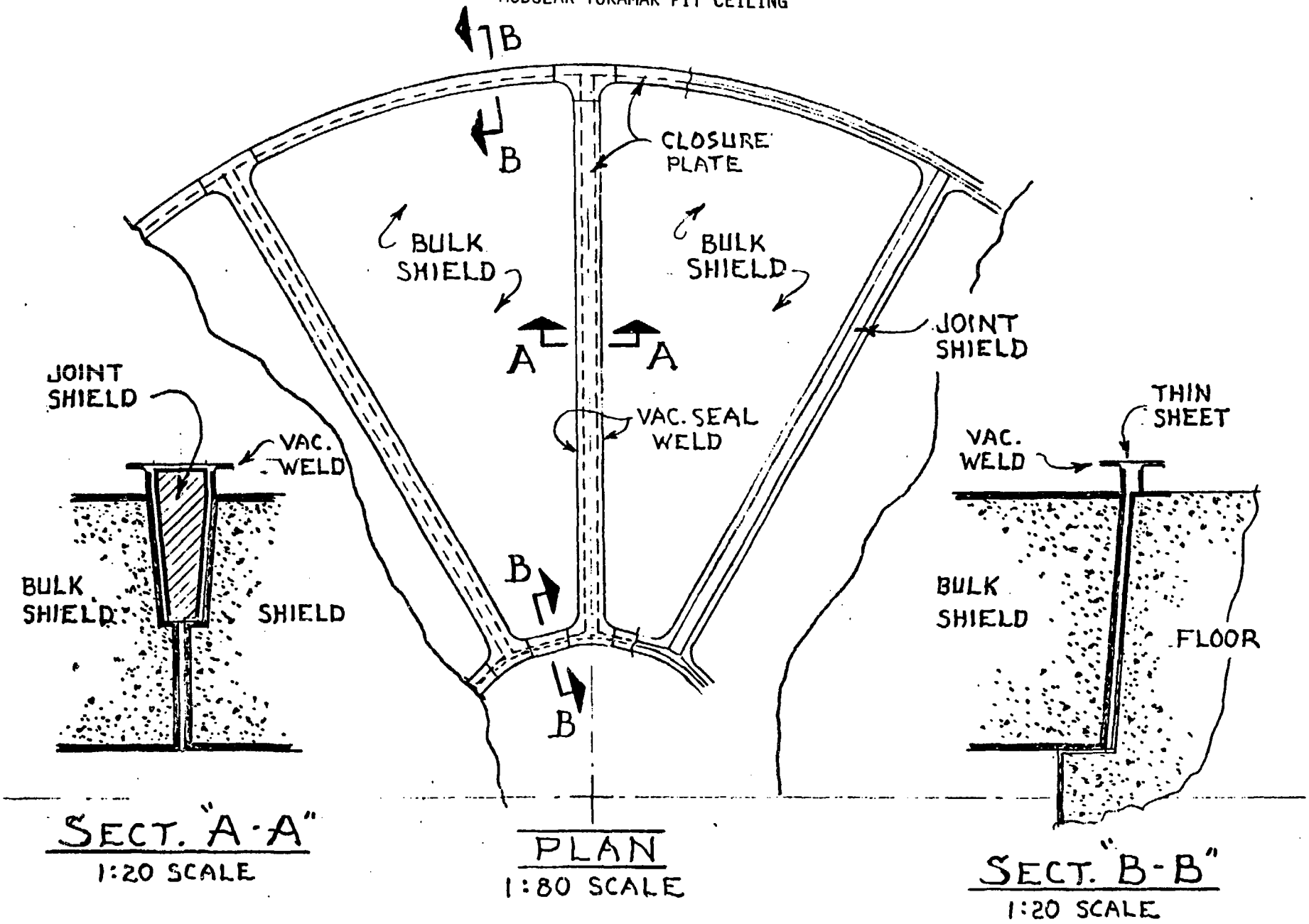

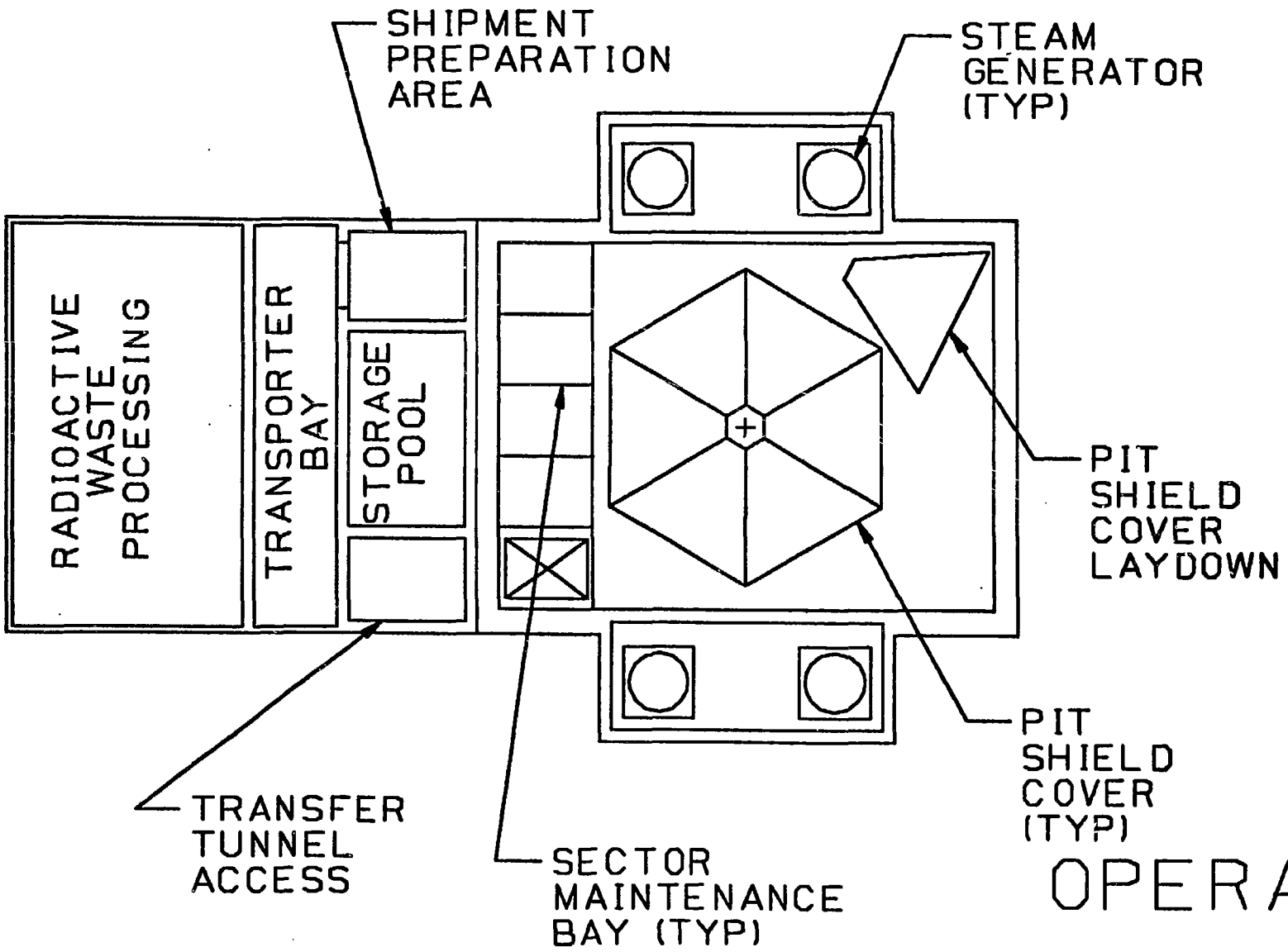
SHIPMENT PREPARATION AREA
STEAM GENERATOR (TYP)
RADIOACTIVE WASTE PROCESSING
TRANSPORTER BAY
STORAGE POOL
PIT SHIELD COVER LAYDOWN
PIT SHIELD COVER (TYP)
TRANSFER TUNNEL ACCESS
SECTOR MAINTENANCE BAY (TYP)

OPERATING

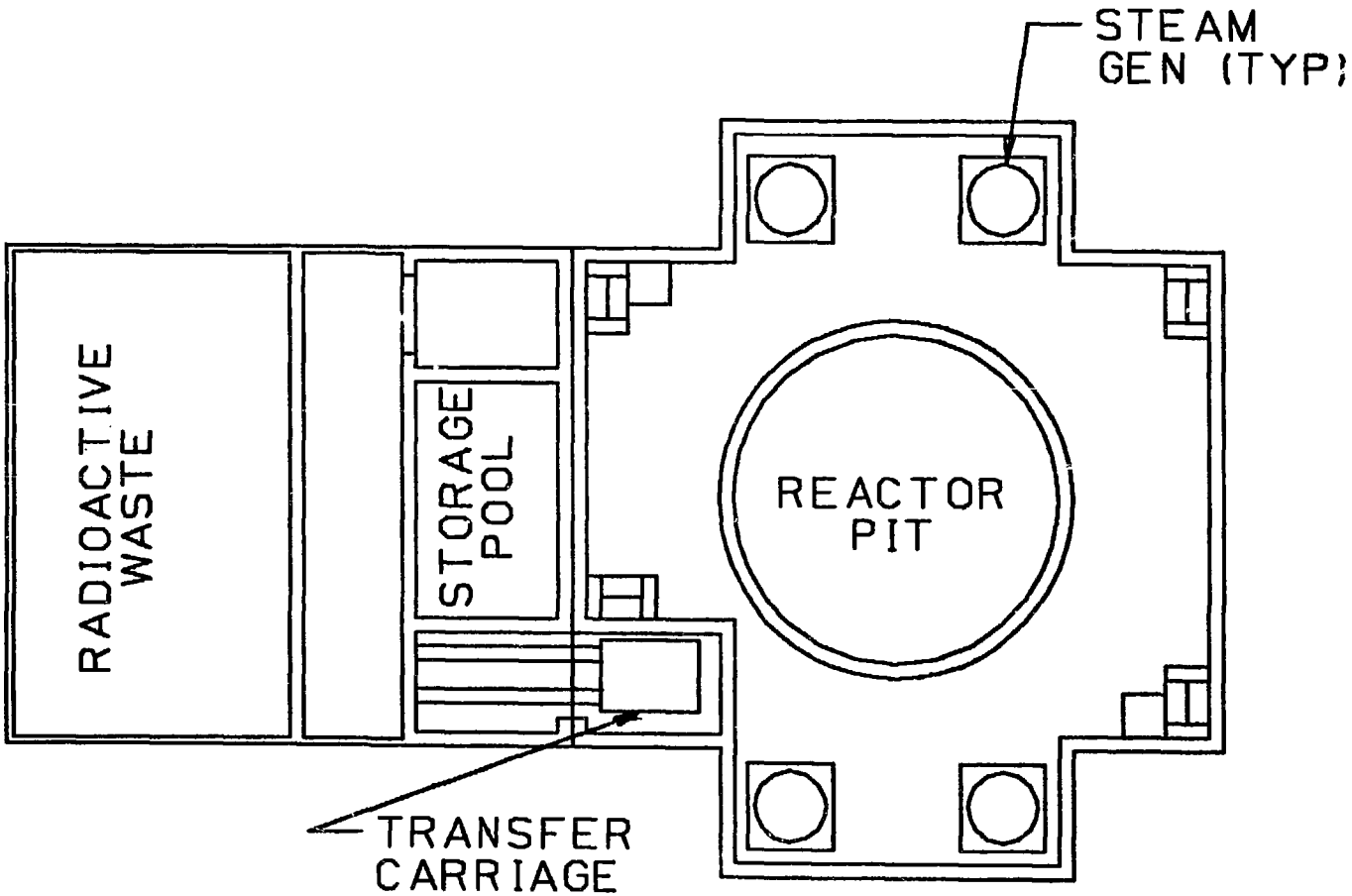
STEAM
GEN (TYP)
RADIOACTIVE
WASTE
STORAGE
POOL
REACTOR
PIT
TRANSFER
CARRIAGE

MEZZANINE

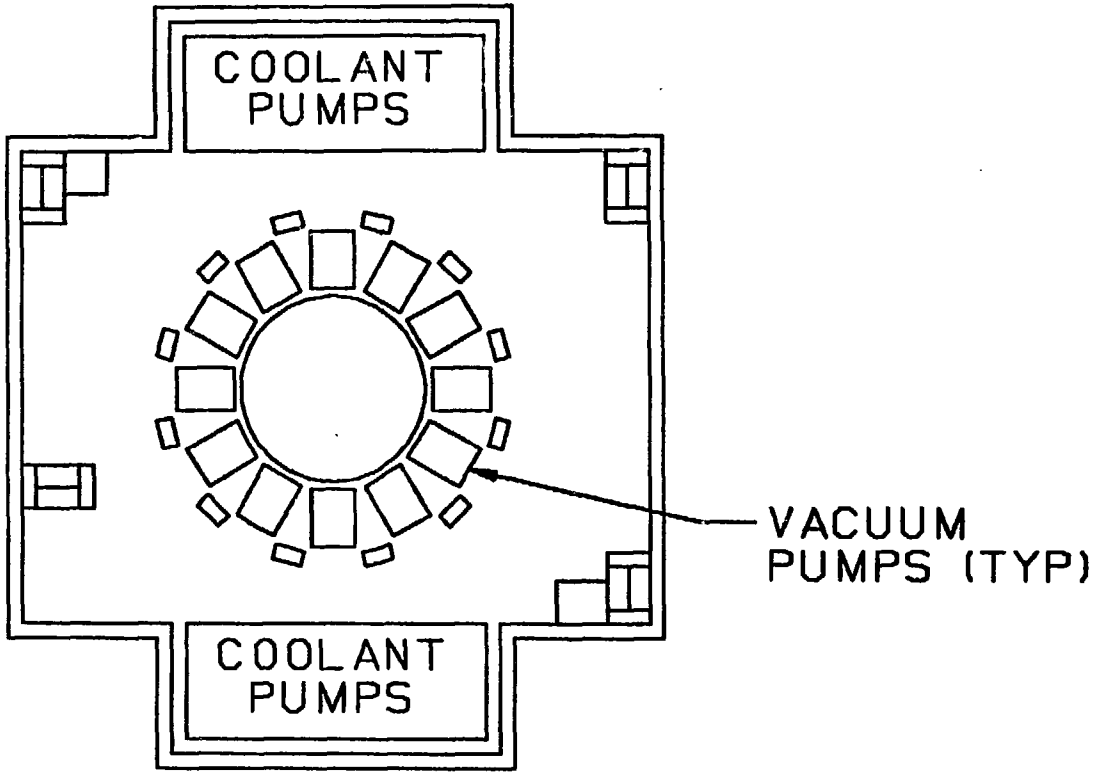

BASEMENT

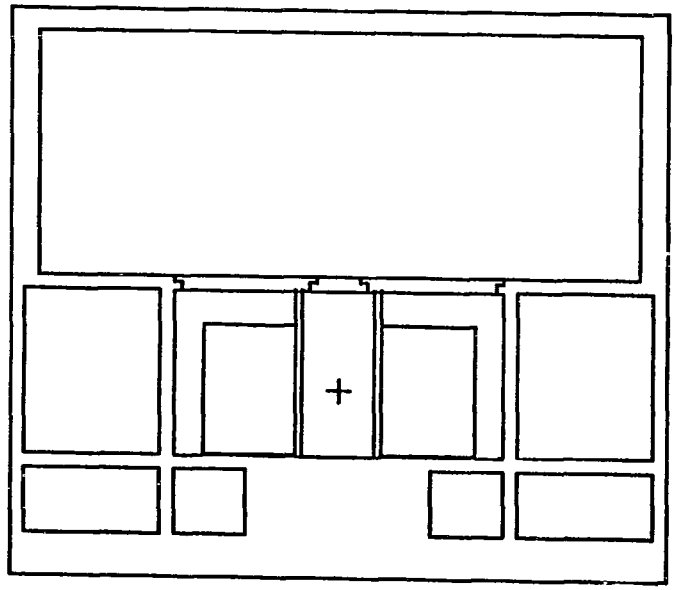

LATERAL
SECTION

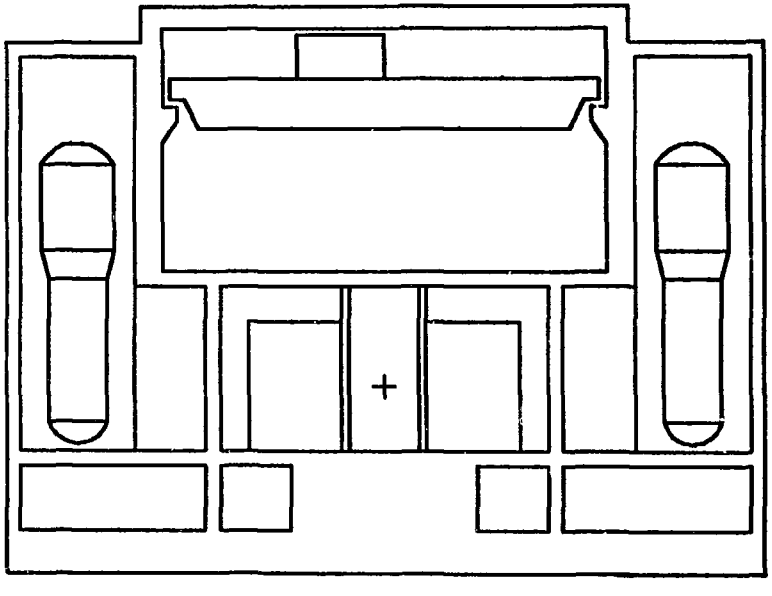

LONGITUDINAL
SECTION

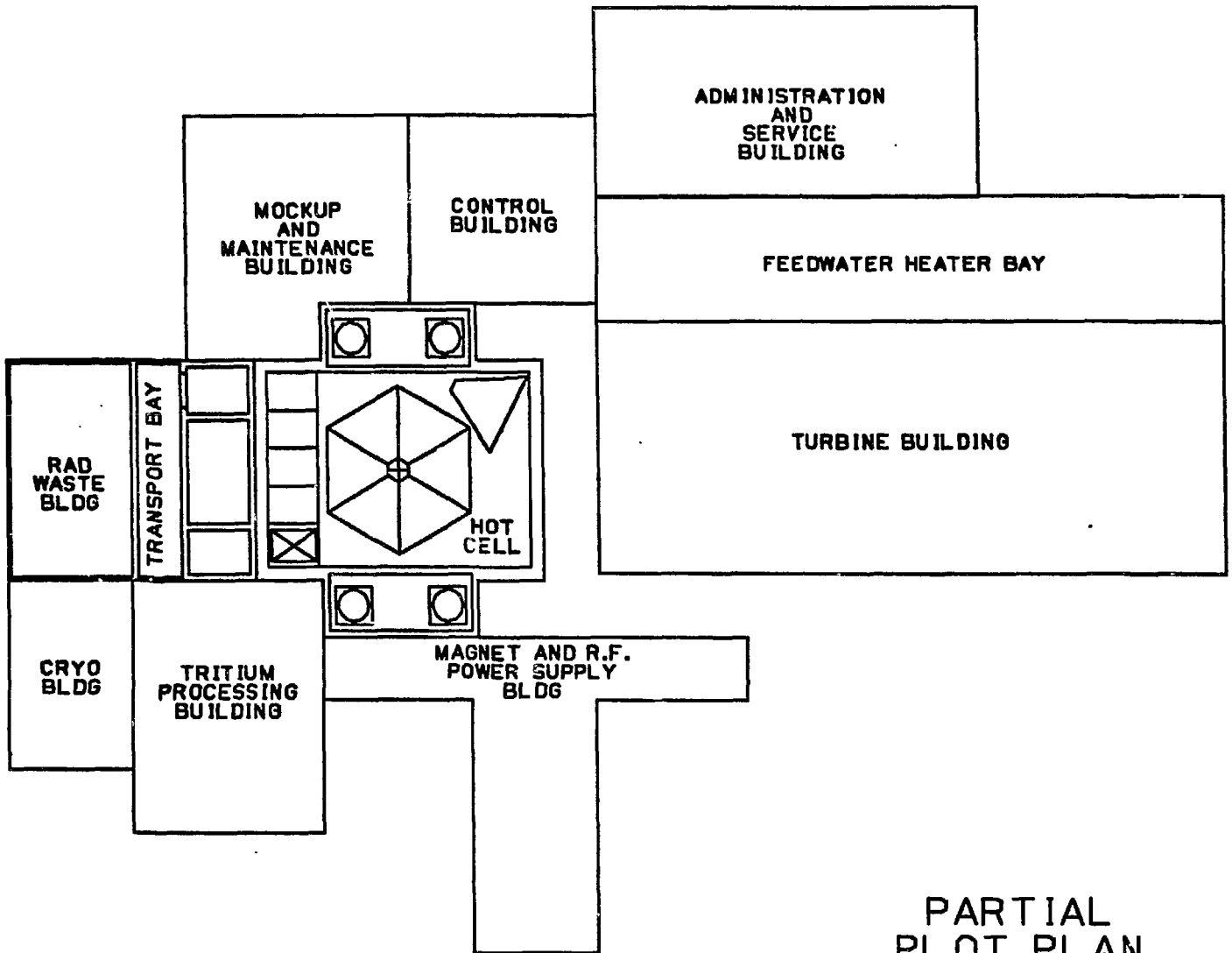

PARTIAL PLOT PLAN

MODULAR TOKAMAK FEATURES

REDUCED FUSION FACILITY SIZE

- LOWER COST
- SHORTER TRANSPORT PATHS

SIMPLER MAINTENANCE APPROACH

- STRAIGHT VERTICAL MOTION
- PRIMARY VACUUM BOUNDARY OUTSIDE DEVICE
- TOTAL DEVICE DISASSEMBLY POSSIBLE

COMPATIBLE WITH GENERIC DESIGN

- MINIMUM COMPONENT RADIAL BUILD

MODULAR DESIGN

- FACTORY FABRICATION AND TESTING
- REMOVE AND REPLACE MAINTENANCE

MODULAR TOKAMAK ISSUES

STRUCTURAL ANALYSIS REQUIRED

- SUPPORT OF MAGNETS IN MODULE
- SUPPORT BETWEEN MODULES

VACUUM SYSTEM REQUIREMENTS

- TORUS PUMPDOWN
- VACUUM SEALS BETWEEN MODULES
- LIMITER PUMPING

PRIMARY HEAT TRANSPORT SYSTEM/BLANKET DESIGN

- FLOW DISTRIBUTION IN MODULE
- MAIN PIPE RUNS
- INCORPORATE PRIMARY COOLANT CIRCUIT IN MODULE?