By acceptance of this article, the publisher or recipient acknowledges the U.S. Government's right to retain a nonexclusive, royalty-free license in and to any copyright covering the article.

CONF-771029--106

INVESTIGATION OF CURRENT TRANSFER IN BUILT-UP SUPERCONDUCTORS*

J. R. Miller, L. Dresner, J. W. Lue

Oak Ridge National Laboratory, Oak Ridge, TN 37830

NOTICE

This report was prepared as an account of work sponsored by the United States Government. Neither the United States nor the United States Department of Energy, nor any of their employees, nor any of their contractors, subcontractors, or their employees, makes any warranty, express or implied, or assumes any legal liability or responsibility for the accuracy, completeness or usefulness of any information, apparatus, product or process disclosed, or represents that its use would not infringe privately owned rights.

MASTER

Abstract

Superconductors carrying 10 kA or more have been widely suggested for use in fusion research and reactor magnets. Built-up or cable conductors have been proposed in which superconductor is concentrated in part of the conductor or part of the strands while the stabilizer occupies the rest. This scheme leads to substantial saving in manufacturing cost and to reduction of ac losses. Simplified analysis indicates that the current transfer from superconducting wire to normal wire takes place over a characteristic length depending on the restivity of the contact barrier, the resistivity of the stabilizer, and the geometry of the conductor. Furthermore, the cold-end recovery suffers a reduction. Two types of conductors were constructed for the experimental test. Triplex conductors consisting of either three superconducting wires or two superconducting plus one copper wire were used to simulate cables. Laminated superconductor and copper strips with different soldering bonds were used for build-ups. Normal zone propagation and recovery experiments have been performed and results are compared with the theory.

---

*This research sponsored by the Department of Energy under contract with Union Carbide Corporation.

DISTRIBUTION OF THIS DOCUMENT IS UNLIMITED

Introduction

Designs for the large superconducting magnets of future fusion machines are specifying conductors with 10 to 20 kA capacity.[1] For several good reasons these large conductors will be built up of smaller conductors by cabling, laminating, bundling, etc., and then possibly bonding the components with solder for mechanical and electrical integrity. A primary advantage of "built-up" conductors is ease of manufacture. However, smaller units mean larger area reductions are possible which usually means more cold work in the superconductor and higher critical current density. Higher critical current density is achieved also in composite strands with lower copper fractions for the same reason. Since stability is increased by raising the critical current density and hence the current sharing temperature, there is some advantage to forming a conductor from smaller units and providing the copper (or aluminum) needed for stabilization in separate strands. If the individual strands are separated by resistive barriers of some kind, ac or pulsed field losses caused by interstrand coupling can be reduced.

However, the question must be asked whether the presence of resistive barriers in built-up conductors might reduce stability. There are two possible reasons why this might be the case. First, in a recovering normal zone where current transfers from the stabilizer back to the superconductor, extra heat will be generated if the current must pass through a resistive barrier. Therefore, at any current level the normal zone would tend to recover more slowly, if it recovers at all. STability might also be reduced by insufficient heat transfer between superconductor composite strands and the rest of the conductor and the cryogen. Although

the latter problem is not the subject of this paper, we do present some evidence that this effect is not important in most cases.

Theory

In order to see how current transfer through a resistive barrier comes about, let us consider the problem of cold-end recovery, first dealt with by Maddock, James, and Norris.[2] In this problem, we imagine a very long normal zone established in the conductor, but one which nontheless has cold ends. In the center of the normal zone, the temperature reaches a steady-state value which corresponds to film boiling in the helium. Far beyond the cold ends, the superconductor is at the temperature of the helium bath and the current is all in the superconducting strands. Between these two extremes, there is a transition zone in which the temperature of the conductor goes from the bath temperature to the steady-state value.

If the current in the conductor is greater than the cold-end recovery current, the normal zone will grow in size, i.e., the transition zone will propagate outwards. If the current is less than the cold-end recovery current, the normal zone will shrink in size, i.e., the transition zone will propagate inwards. In the first case the conductor will not recover the superconducting state, in the second case it will. The limiting current which separates these two regimes, the cold-end recovery current, corresponds to a transition zone that neither propagates outwards nor inwards, but is exactly stationary.

In the neighborhood of the transition zone, the current is transferring from the superconducting strands to the copper. In conductors in which the copper is a continuous phase, the current in the copper is uniformly spread over the copper cross section, but in built-up conductors

it is not, owing to the presence of the solder barriers. The non-uniform current distribution in the transition zone causes higher Joule heating than if the current were uniformly distributed in the copper. Furthermore, there is additional Joule heating as the current crosses the solder layers. This excess heating in the transition zone is the cause of the diminished stability of solder-filled, built-up conductors.

Since it is our purpose to estimate the decrease in stability of built-up conductors, a number of simplifying assumptions have been made. In the first place, the thermal conductivities and electrical resistivities of the copper and solder and the heat transfer coefficient have been taken to be independent of temperature. In the second place, current sharing has been neglected, i.e., it has been assumed that the resistivity of the superconducting strands jumps sharply from zero to its full normal value at the critical temperature. This second assumption is particularly important because it decouples the electrical and thermal parts of the problem and allows them to be solved one after the other rather than simultaneously.

Figure 1 shows a series-parallel resistive network which represents a built-up conductor. The branck marked 1 represents the composite elements. It has a resistance $R_1\Delta x$ in a length Δx parallel to the direction of the conductor. Above the critical temperature, $R_1\Delta x$ is the resistance of the copper bonded to the strands in the composite. Below the critical temperature, $R_1 = 0$ since the strands are superconducting. The branch marked 2 represents the pure copper elements and has a resistance $R_2\Delta x$ in a length Δx which is independent of temperature. The branch marked 3 represents the solder layer joining the composite and copper elements; it has a resistance $R_3/\Delta x$ in a length Δx.

The current flowing to the right in branch 1 at point x is $I_1(x)$. The current flowing to the right in branch 2 at point x is $I_o - I_1(x)$, where I_o is the total current flowing in the conductor. In order for the currents entering and leaving a node like A between the loops at x and $x + \Delta x$ to be equal, the current $\Delta I''$ flowing from branch 1 to branch 2 at that point must be $-\Delta x(\frac{dI}{dx})_{x+\Delta x/2}$. The voltage around this loop must sum to zero. Therefore,

$$R_3 \left(\frac{d^2 I_1}{DX^2}\right) = I_1(R_1+R_2) - I_o R_2 \quad . \tag{1}$$

We choose the origin of the coordinate x as that point in one of the stationary transition zones at which the temperature equals the critical temperature, T_{cr}. We assume the normal zone lies to the right of x=0. Thus $R_1 = 0$ for $x < 0$.

The solution of (1) we seek is

$$I_1 = I_o f^2 + I_o f(1-f)\exp(-\gamma x/f) \qquad x > 0 \tag{2a}$$

$$I_1 = I_o - I_o(1-f)\exp(\gamma x) \qquad x < 0 \tag{2b}$$

where

$$f = (1 + R_1/R_2)^{-1/2} \text{ and } \gamma = (R_2/R_3)^{1/2} \tag{2c}$$

Using this solution we can calculate the Joule heat production per unit length of cnductor Q_J according to the formula

$$Q_J = I_1^2 R_1 + I_2^2 R_2 + (dI_1/dx)^2 R_3 \tag{3}$$

The result is as follows

$$Q_J = I_o^2 \frac{R_1 R_2}{R_1 + R_2} \quad 1 + 2\frac{(1-f)}{(1+f)} \exp(-2\gamma x/f) \qquad x > 0 \tag{4a}$$

$$Q_J = I_o^2 \frac{R_1 R_2}{R_1 + R_2} \quad 2\frac{(1-f)}{(1+f)} \exp(2\gamma x) \qquad x < 0 \tag{4b}$$

The heat balance equation for a length Δx of the conductor can be written

$$A\ \Delta x\ k \left(\frac{d^2T}{dx^2}\right) - h\ (T-T_b)\ P\ \Delta x + Q_J\ \Delta x = 0 \tag{5}$$

where A is the cross-sectional area of the conductor, k is the thermal conductivity, T is the temperature (assumed the same over the entire cross section), h is the heat transfer coefficient, T_b is the temperature of the helium bath, and P is the cooled perimeter. We must solve (5) for $x > 0$ and $x < 0$ and match the two solutions so that T and dT/dx are continuous at $x = 0$. The requirement that $T = T_{cr}$ at $x = 0$ will give an additional condition that must be satisfied if the transition zone is to be stationary. The current which satisfies this condition is the cold-end recovery current.

The remaining algebra is tedious but straightforward and is omitted. The result is simplified by the introduction of the following auxiliary variables:

$$i = I/I_{cr,b} \qquad (I_{cr,b} = \text{critical current at } T = T_b) \tag{6a}$$

$$\alpha = \frac{I^2_{cr,b}\,[R_1R_2/(R_1+R_2)]}{hP\,(T_{cr} - T_b)} \qquad \text{(Stekly's parameter)} \tag{6b}$$

$$\kappa = \gamma\left(\frac{Ak}{hP}\right)^{\frac{1}{2}} = \left(\frac{R_2}{R_3}\right)^{\frac{1}{2}} \left(\frac{Ak}{hP}\right)^{\frac{1}{2}} \tag{6c}$$

Then

$$i = \left(\frac{2}{\alpha}\right)^{\frac{1}{2}} \cdot \quad 1 + 2\,\frac{1-f}{1+f}\left(\frac{1}{1+2\kappa} + \frac{1}{1+2\kappa/f}\right)^{-\frac{1}{2}} \tag{7}$$

The second factor on the right-hand side is the correction factor c to the cold-end recovery current due to the excess Joule heat production, as we can see from the value of i in the limit $R_3 \to 0$, $\kappa \to \infty$. It is shown for several values of R_3/R_2 in Fig. 2.

By way of example, we apply this result to two conductors recently described. The first is the MX conductor of Cornish *et al.*[1] Taking a solder resistivity of 10^{-8} Ω m at 4.2 K and an RRR of 200 for the copper, we find (at 7.5 T) the following correction factor c for the cold-end recovery current as a function of solder thickness: $1 - C = 0.046\ t^{0.43}$ where t is the solder thickness in mils. A similar computation fot the IGC-LCS conductor described by Fietz[1] (at 8T) gives $1 - c = 0.039\ t^{0.43}$, again with t in mils. The corrections amount to only a few percent for reasonable solder thicknesses.

Experimental Approach

A determination of the cold-end recovery current of a length of test conductor is made most accurately by measuring the velocities of

propagation and recovery over a current range surrounding this point and using this data to find the zero crossing. Our apparatus and technique for making such measurements is described elsewhere.[3,4,5] What is of interest here is the configuration of the test conductors we used.

Two basic types of test conductors were used. To represent cabled conductors, we chose triplex units such as that shown in Fig. 3. Several variations of this unit were possible. In one series all the individual wires were superconductor composites, and in another series two of the wires were composites and one pure copper. The overall copper : superconductor ratio of triplex strands in both series was very nearly the same. In each series, coupling between strands was varied by having the individual wires either bare, tinned but not bonded, tinned and bonded, or insulated. Table I summarizes the characteristics of these conductors. Individual wires were all 1.0 mm diameter and the active test length of the conductors was always 2.2 m. Since the only major difference between these two series was the physical separation of stabilizer from superconductor, the comparative stability of these should help evaluate the effect of resistive barriers between cable strands.

A second type of built-up conductor considered experimentally was a laminated, monolithic structure such as that shown in Fig. 4. This type conductor was formed by solder bonding a rectangular copper conductor to a rectangular superconductor composite.

The barrier resistance was varied from sample to sample by adding different thicknesses of nickel-chromium alloy ribbon in between the copper and composite part of the conductor. Table II lists pertinent conductor characteristics. The lack of direct linear variation of $R_{\perp}$ with separator thickness is due to "bridging" of the separator by

high conductivity solder. All test conductors were bonded with (95 wt.%) Sn-(5 wt.%) Ag solder, and the active test length was again 2.2 m.

Results and Discussions

It is easier to put quantitative limits on stability degradation for the laminated, monolithic test conductors because of the saimpler geometry. We found both surface exposure to helium and barrier resistance to be better determined for this type conductor. Therefore, we present data for these conductors first.

A compilation of data for velocities of propagation or recovery at a normal region versus current at one value of transverse applied field is shown in Fig. 5. It is typical of data taken at other fields. Two things should be apparent from these data. First, within experimental error there is very little difference in stability of the different conductor samples although barrier resistance between stabilizer and composite has been varied over a fairly wide range. Second, although it appears the conductor formed with a direct solder bond is slightly more stable than the others, the decrease in cold-end recovery current is not as large as predicted by the theoretical model. For convenience correction factor for each of the cases in Fig. 4 is tabulated in Table III, and it is apparent that the predicted variation is larger than experimental errors in the data. The reason for this discrepancy is not completely understood. However, the theory does not take into account current sharing in the superconductor. In any case, it would appear that the theory is conservative.

Relatively more variation was observed in the stability of the triplex conductors as can be seen from the data of Figs. 6 and 7. Error bars are not shown here but they correspond closely to those in Fig. 5. The fitted curves were not calculated but are merely to aid in distinguishing the data.

Several points should be made about these data. Most obvious is the closeness of data for triplex strands with bare or tinned wires, whether made up of three composite strands or two composite plus one copper. Next it should be noted that the strands of both types with soldered wires are more stable than those with tinned or bare wires. However, not all of the difference should be attributed to differences in transverse resistance. In the three-composite strand where stabilizer is uniformly distributed, transverse resistance should have no effect. It is also apparent that the full recovery current is quite different for both types of conductor, which should not be the case if extra heating in a resistive barrier were the only effect.

We feel that the large difference in data for the soldered conductors is predominantly caused by differences in effective heat transfer. The higher stability for the insulated triplex is almost entirely due to the larger copper function in that conductor (Fig. 5).

The issue of whether there is degradation of cold and stability by resistive barriers may still be addressed using the data of Figs. 6 and 7, however. If we look at the ratio of maximum recovery current I_{MR} to full recovery current I_{FR} the differences among data due to differences in effective heat transfer and small differences in stabilizer resistivity are normalized out. Table IV lists the values of I_{FR} and I_{MR} taken from the data of Figs. 6 and 7. The ratios listed are all very similar except for the last case which differs from the others by

11 to 14%. Since the accuracy of these ratios is basically the accuracy of determining the transport current during measurements on one particular sample (about 3%), this difference should be interpreted as being due to relatively larger transverse resistance in the soldered two-composite strands as compared to the strands with tinned or bare wires. This presumably would be due to a bronze layer formation during the second heat used to bond individual tinned strands together.

It is useful to examine another aspect of all the data presented here. The recovery heat flux is obtained directly from data for the full recovery current, normal state resistance, and helium exposure. These data are presented in Table V. Accuracy for $\dot{g}$ is about 10%. Therefore, we have further evidence of a difference in effective heat transfer between the soldered triplexes and the bare and tinned ones. The values of $\dot{g}$ for the laminated conductors may be somewhat higher because they include some heat transfer to adjacent potting material.

Summary and Conclusions

We have constructed a simple theory that predicts a reduction in cold-end stability by extra heating in resistive layers joining stabilizer and composite strands. However, the predicted decrease appears to be small in the cases considered. Experimental evidence suggests that the effect is even smaller than predicted, i.e., the theory is conservative. In fact other parameters that are difficult to control, such as effective heat transfer, appear predominant. This is an important result because it gives the conductor designer more freedom to reduce manufacturaing difficulties, improve conductor performance, and reduce ac losses by

segregation of composite and stabilizer. It also indicates that stringent quality control of soldering in built-up conductors is probably not necessary from an electrical standpoint.

Table III

Conductor description	I_{MR} (A)	I_{FR} (A)	I_{MR}/I_{FR}
3 sc bare	310	226	1.37
3 sc tinned	310	226	1.37
3 sc soldered	386	290	1.33
2 sc + 1 Cu bare	319	240	1.33
2 sc + 1 Cu tinned	319	240	1.33
2 sc + 1 Cu soldered	385	320	1.20

Settings for Table V. 18 42 49 56 74

Table IV. Triplex conductors

Conductor description	$H_{\perp}$ (T)	I_{FR} (A(	R_N ($\times 10^{-4}\ \Omega\ m^{-1}$)	$\dot{g}$ ($\times 10^{3}$ W m^{-2})
3 sc bare	7	200	2.34	1.2
	5	226	1.91	1.2
	3	260	1.46	1.3
3 sc tinned	7	200	2.22	1.1
	5	226	1.81	1.2
	3	260	1.39	1.2
3 sc soldered	5	290	1.91	2.0
3 sc insul.	5	350	1.24	1.9
2 sc + 1 Cu bare	7	210	1.92	1.1
	5	240	1.51	1.1
	3	290	1.10	1.2
2 sc + 1 Cu tinned	7	310	1.98	1.1
	5	240	1.54	1.1
	3	290	1.09	1.2
2 sc + 1 Cu soldered	5	320	1.52	2.0
Laminated conductors				
Overall average	7	400	0.465	2.4
	5	480	0.358	2.6

ORNL/DWG/FED-7732

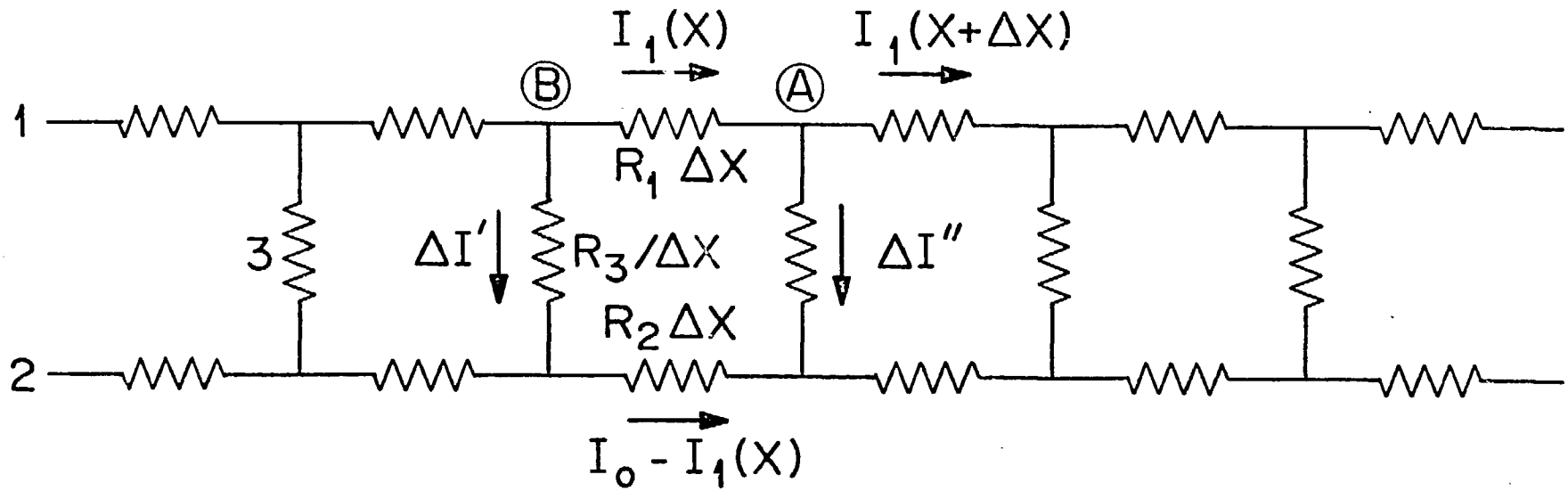

Figure 1. Equivalent Circuit of a Built-up Conductor

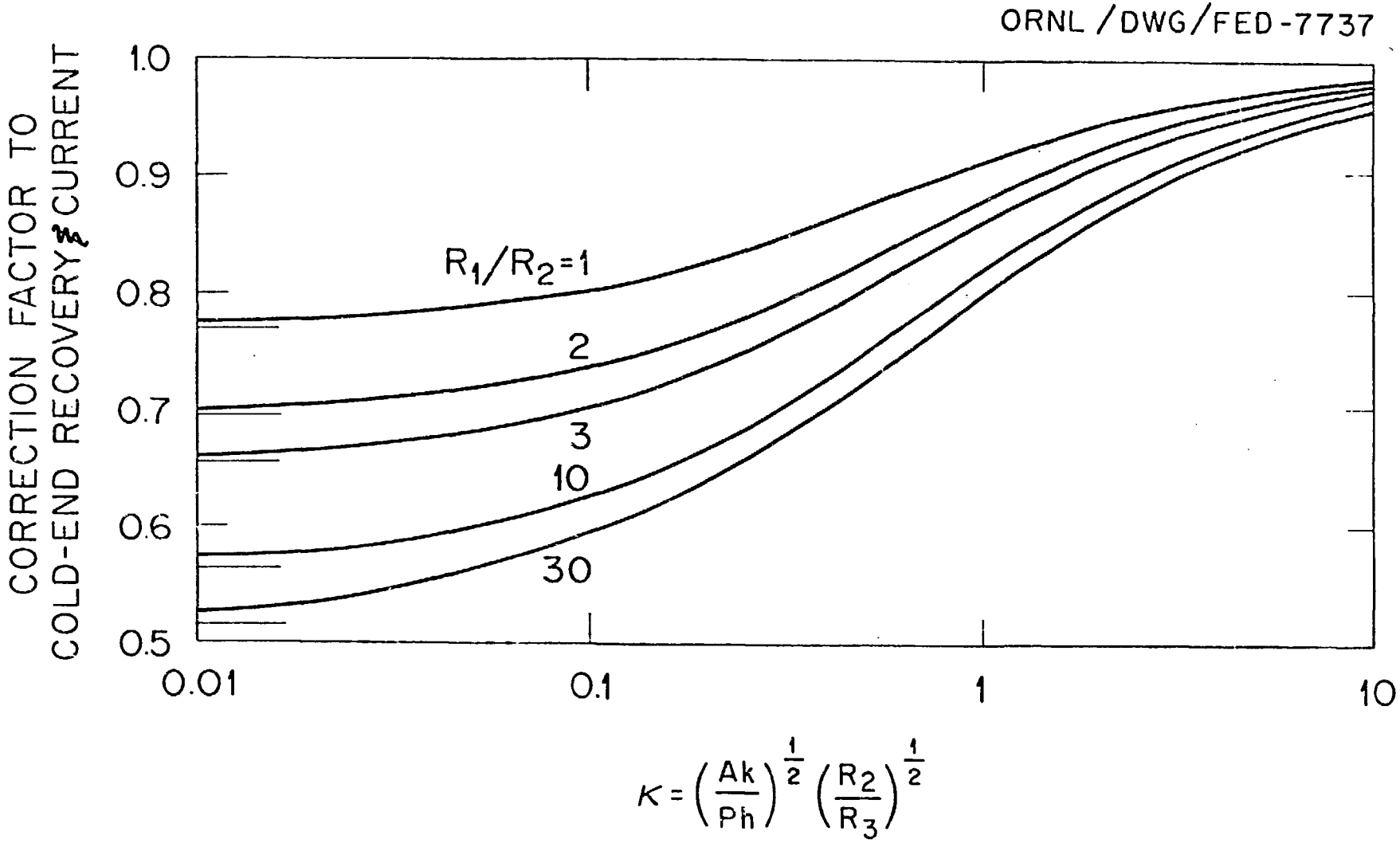

Figure 2. Correction Factor to the cold end recovery current due to a resistive barrier between superconductor and solution

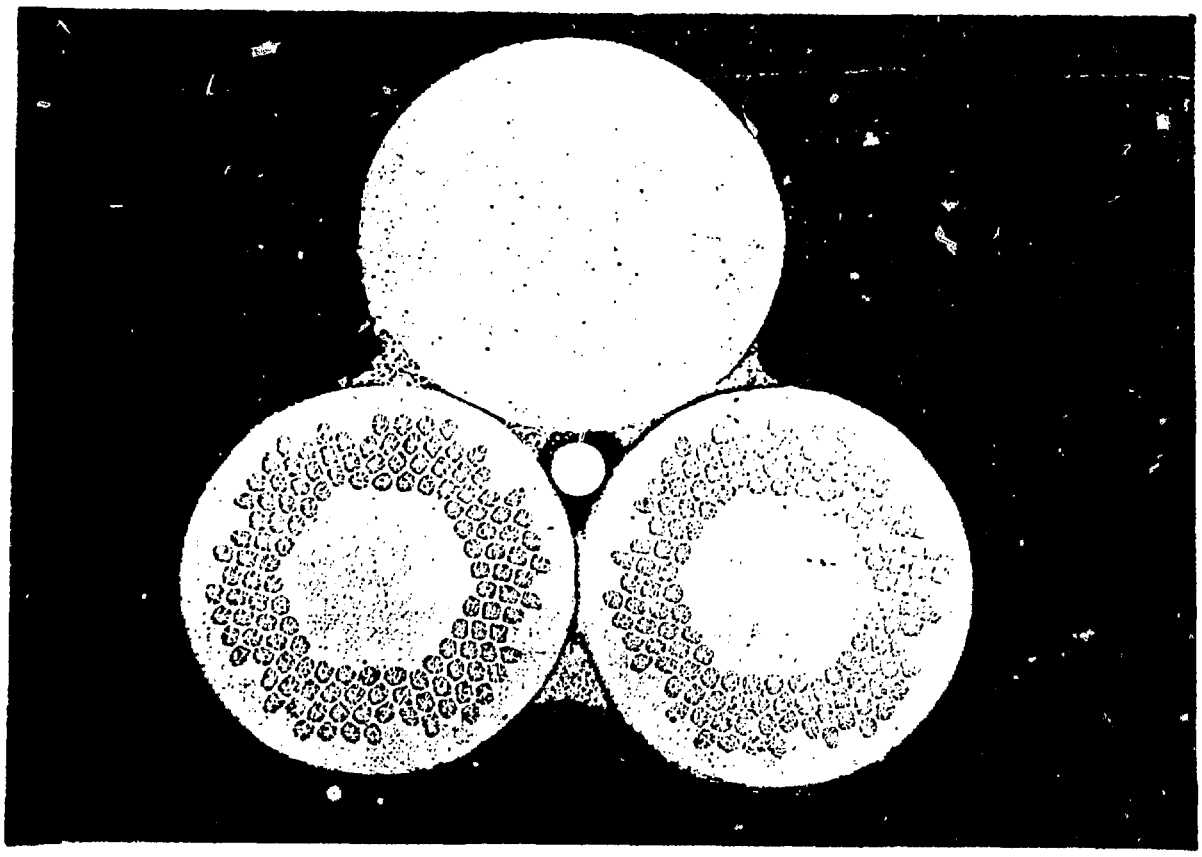

Figure 3. A triplex unit test conductor showing imbedded heater at the center.

ORNL/DWG/FED-77774

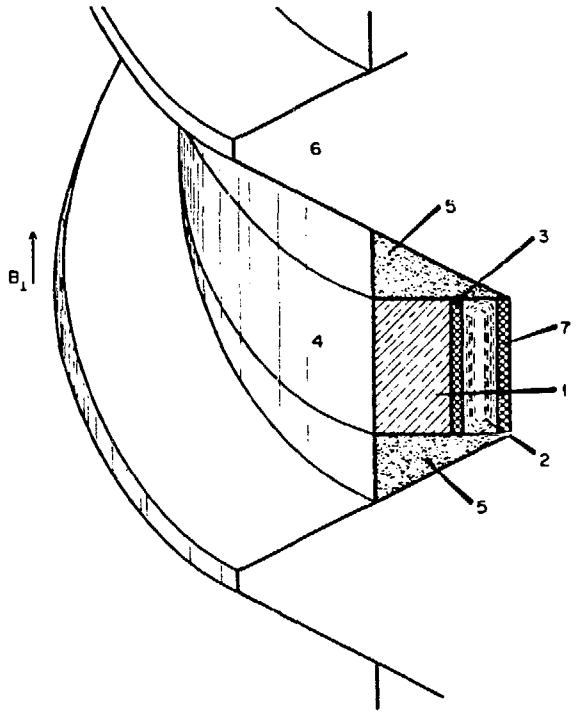

1. COPPER STABILIZER STRIP
2. SUPERCONDUCTOR COMPOSITE STRIP
3. RESISTIVE BARRIER
4. STABILIZER SURFACE EXPOSED TO L.He
5. POTTING MATERIAL
6. "THREAD" OF SAMPLE HOLDER
7. INSULATED STRIP HEATER

Figure 4. Laminated, monolithic conductor in test configuration with stabilizer and composite separated by a resistive barrier

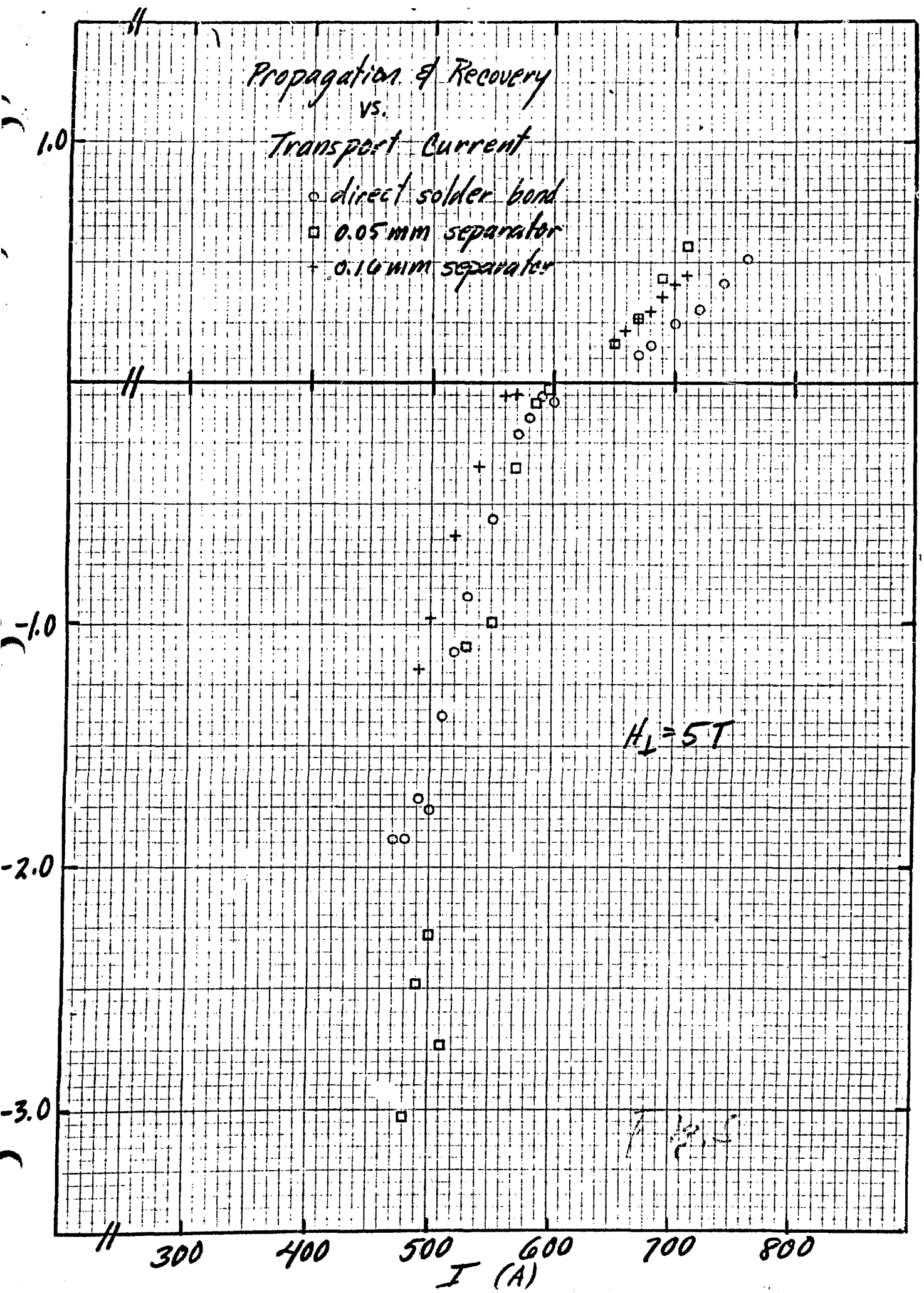
Propagation & Recovery
vs.
Transport Current
○ direct solder bond
□ 0.05 mm separator
+ 0.16 mm separator
$H_\perp = 5T$
1.0
-1.0
-2.0
-3.0
300
400
500
600
700
800
I (A)

Figure ~~5~~ 6

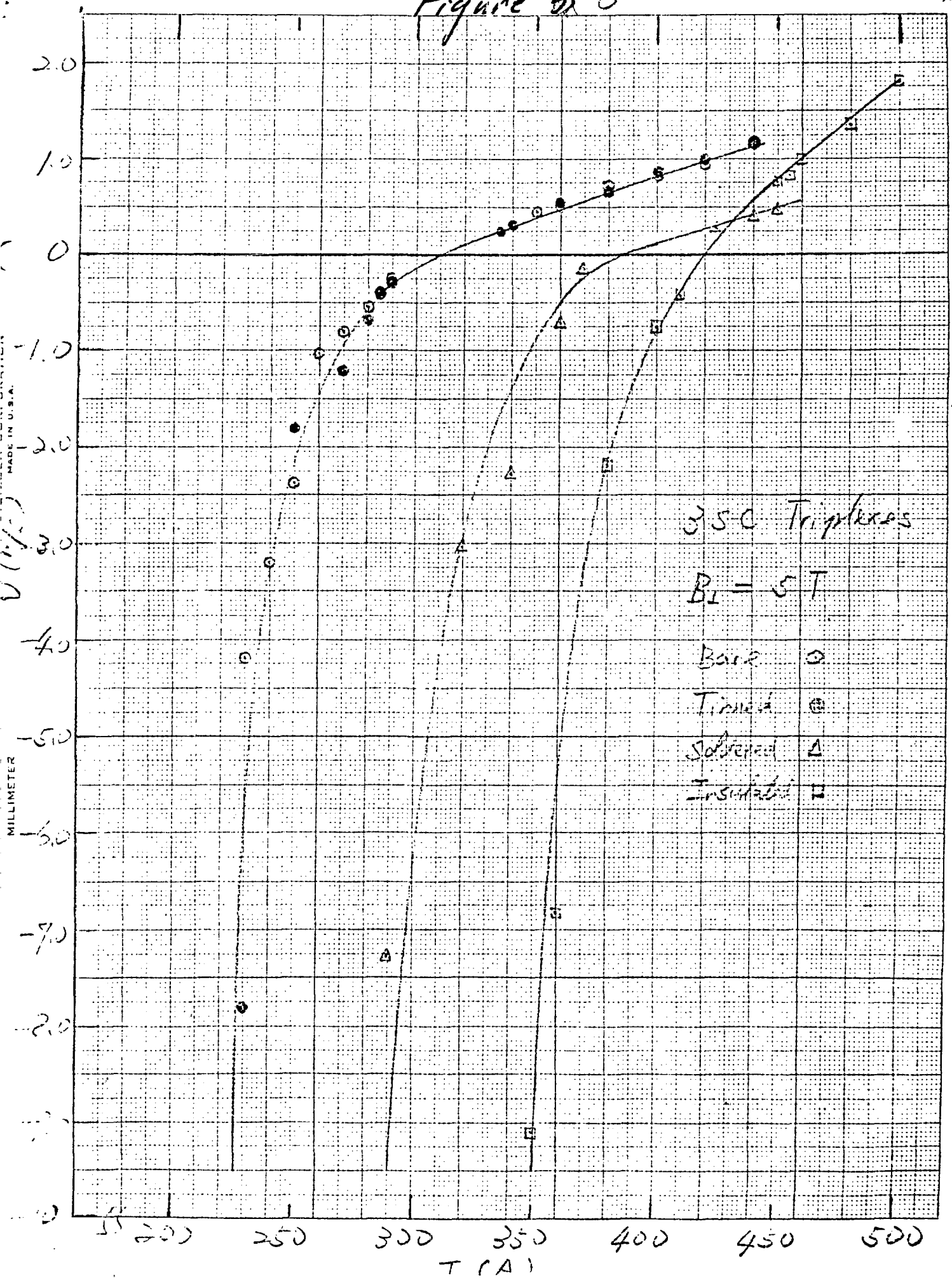

2.0
1.0
0
-1.0
-2.0
-3.0
-4.0
-5.0
-6.0
-7.0
-8.0
200
250
300
350
400
450
500
T (A)
MILLIMETER
MADE IN U.S.A.
3SC Triplexes
$B_\perp = 5T$
Bare
Tinned
Soldered
Insulated

10/4/7
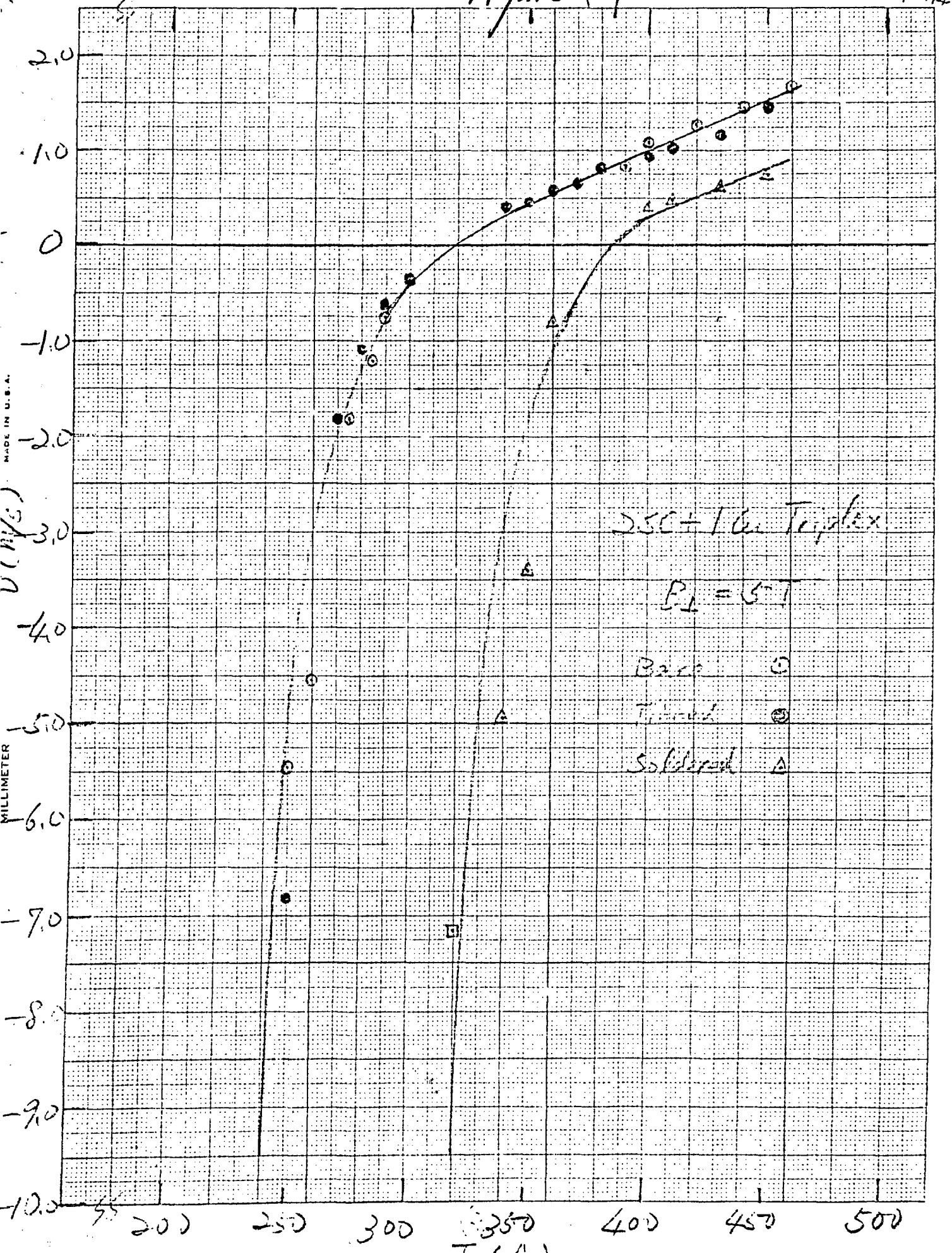
Figure 4 7