CONF-860652--12

CONF-860652--12

DE86 013258

MASTER

OVERVIEW OF THE COMPACT IGNITION TOKAMAK

C. A. Flanagan

DISCLAIMER

This report was prepared as an account of work sponsored by an agency of the United States Government. Neither the United States Government nor any agency thereof, nor any of their employees, makes any warranty, express or implied, or assumes any legal liability or responsibility for the accuracy, completeness, or usefulness of any information, apparatus, product, or process disclosed, or represents that its use would not infringe privately owned rights. Reference herein to any specific commercial product, process, or service by trade name, trademark, manufacturer, or otherwise does not necessarily constitute or imply its endorsement, recommendation, or favoring by the United States Government or any agency thereof. The views and opinions of authors expressed herein do not necessarily state or reflect those of the United States Government or any agency thereof.

*Research sponsored by the Office of Fusion Energy, U.S. Department of Energy, under Cotnract DE-AC05-840R21400 with Martin Marietta Energy Systems, Incorporated

DISTRIBUTION OF THIS DOCUMENT IS UNLIMITED

C.A. Flanagan
Fusion Engineering Design Center
for
CIT National Design Team

OVERVIEW OF THE COMPACT IGNITION TOKAMAK

presented at
7th Topical Meeting
on the
Technology of Fusion Energy
Reno, Nevada, June 16, 1986

BACKGROUND

- o During Last Several Years, Ignition and Plasma Burn Have Been Key Objectives Of US Conceptual Tokamak Designs (FED, INTOR, TFCX)
  - Early Designs Were More Ambitious, Larger (4 to 5 m), More Expensive (> 1B$)
  - Objectives Included: Ignition, Long Pulse (100 to 500 s), and Engineering Technology Development

- o In 1985, Studies Of Very Compact Tokamaks (1.1 to 1.5 m) Were Begun;
  - Objectives Included: Ignition, Short Burn Pulse (3 to 5 s)
  - Capital Cost Reduced (< 500 M$)
  - Studies Included:
    - Ignitor – European Design Team
    - LITE – MIT Design Team
    - ISP – PPPL Design Team
    - FEDC Ignitor – FEDC Design Team

- o In mid–1985, An International Panel Concluded Compact Devices Of This Class Appeared Feasible And Further Study Was Warranted

- o In Early 1986, A National Design Team Was Formed; A Baseline Design Point Was Established; A Conceptual Design Is In Process

MISSION AND PHYSICS OF CIT

- The Mission Of CIT Is To Realize, Study, And Optimize Fully Ignited Plasma Discharges.

- The Physics Requirements Have Been Established To Provide Reasonable Assurance That The Mission Will Be Achieved
  - Plasma Confinement Guidelines Consider All Present Scaling Laws; Ohmic, Auxiliary Heated L–Mode, Auxiliary Heated H–Mode
  - Figure–of–Merit Established: $X = aB \quad /q$; This Is Proportional To Ignition Margin; X Must Be > 25
  - Burn Pulse Duration Set At Ten Times Tau–E; An Additional Two Times Tau–E Specified To Heat To Ignition
  - Capability To Operate Both In Limiter And Divertor Mode

PHYSICS GUIDELINES AND OPERATIONAL LIMITS

Item	Guideline/Limit
Confinement	Adequate Margin For Ignition Confinement Degradation Assumed For Auxiliary Heating And Alphas
Figure of Merit	X = aB2/q >25
Density Limit	Murakami Limit
Beta	Tryon Limit, <0.031/aB, %
Elongation	b/a < 1.8
Aspect Ratio	R/a > 2.7
Plasma Current	Limiter > 10 MA Divertor > 9 MA q-edge > 2.6
Burn Pulse	> 10 Tau-E
TF Flat-top	> 12 Tau-E
Auxiliary Heating	12 MW, ICRF
Impurity Control	Limiter Double Null Divertor Zeff < 1.5
Fueling	Gas and Pellet

KEY PARAMETERS OF CIT

Parameter	Value
Major Radius, m	1.22
Minor Plasma Radius, m	0.45
Elongation	1.8
Plasma Current	
Limiter, MA	10
Divertor, MA	9
Field on axis, T	10.4
Neutron Wall Loading	
at 300 MW Fusion Power, MW/m2	6.8
ICRH Power, MW	12
TF Flat Top Time, s	3.7
Plasma Burn Time, s	3.1
Plasma Current Ramp-up Time, s	3.3
Number of Pulses	
Full Field	3000
70 % Field	50000

CIT DISTINGUISHING FEATURES

- o Major PF Coils Located External To TF Coils
  - — Small TrimCoils Located Internal To TF Coils
- o TF Coil Inner Leg Preloaded By Hydraulic Press/External Frame
- o Wedging Of TF Coil Inner Legs; No Bucking TF/OH
- o TF and OH Conductors Use Explosively Bonded Laminated Inconel—Copper
- o An Average Stress Criterion Is Used; Average Stress Is Allowed To Approach 0.85 Of Yield Of Laminate
- o TF Outer Legs Use Coil Cases; Provide Support For Out—of—plane Loads

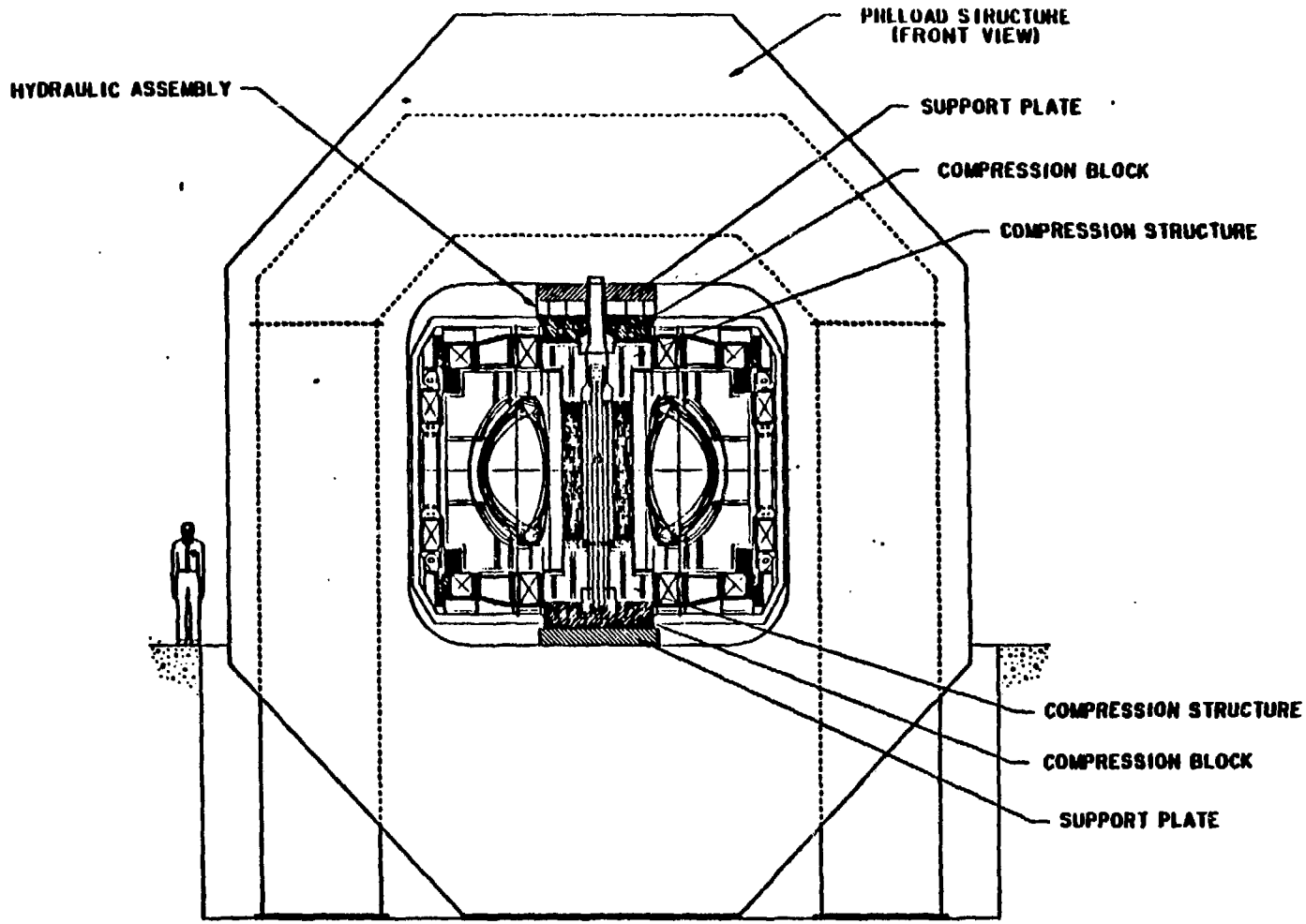

Figure 1.6-2
ELEVATION VIEW OF CIT

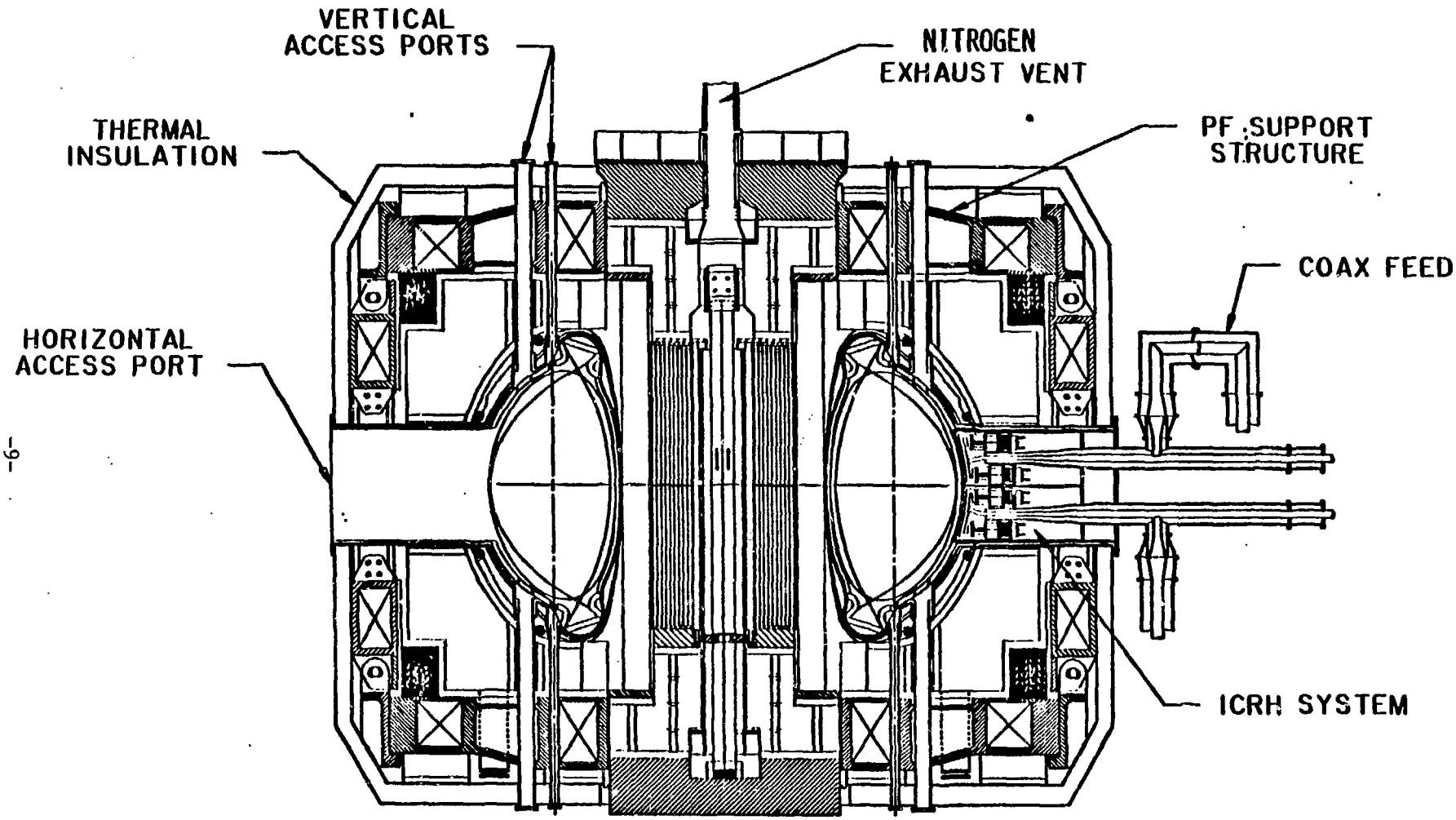

Figure 4.1-4
DEVICE CORE ELEVATION VIEW

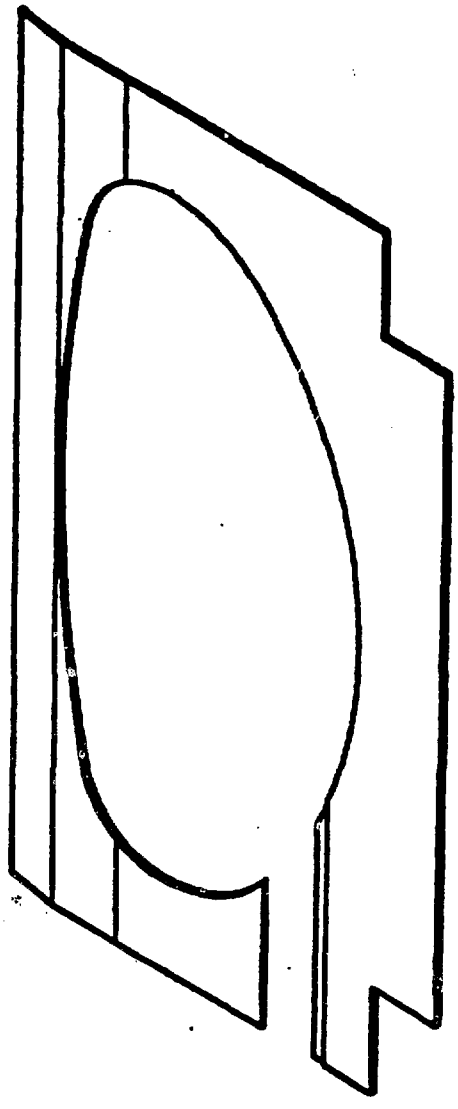

Figure 4.7-1
TF COIL SINGLE TURN OF CONDUCTOR

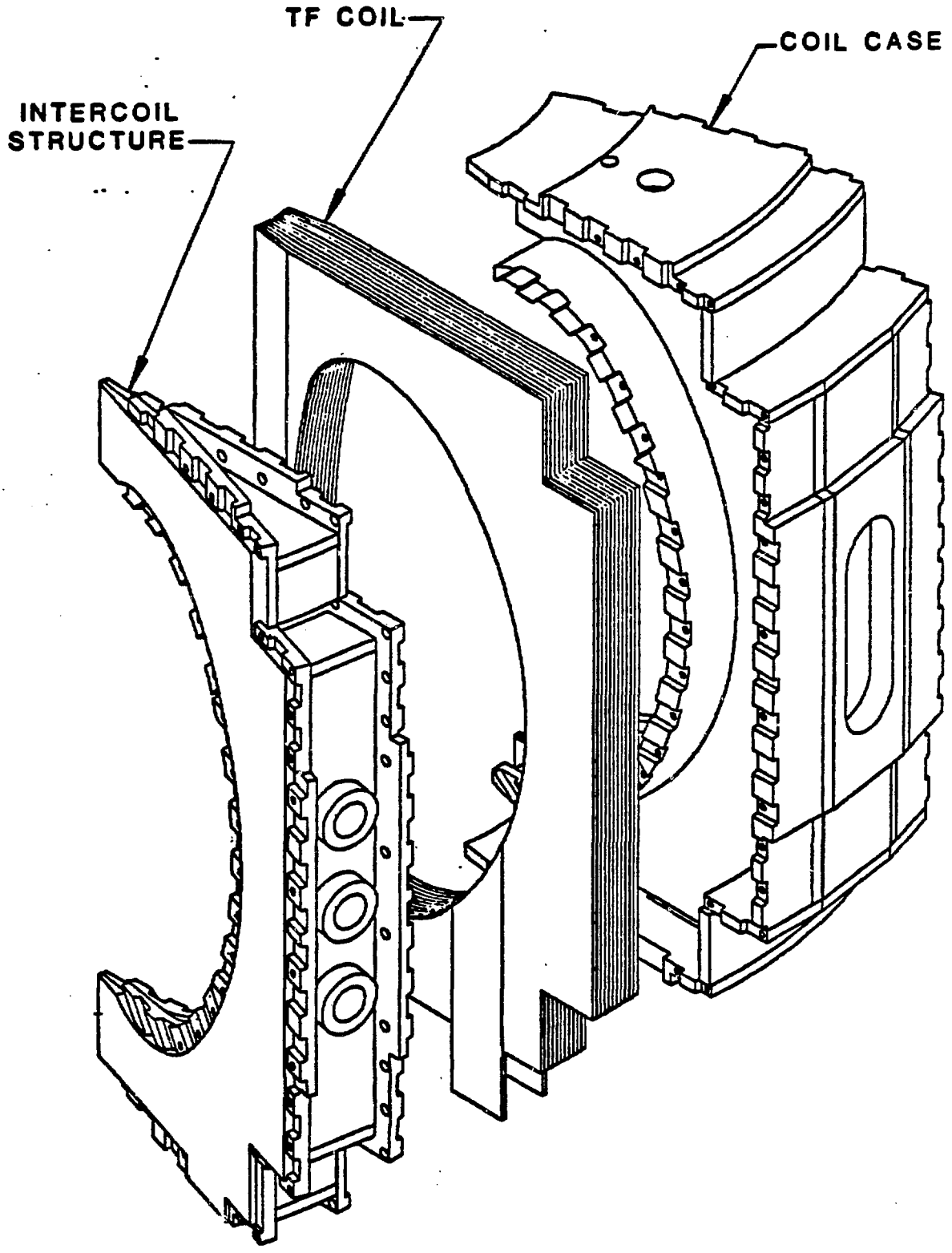

Figure 4.7-5

TF COIL AND CASE ASSEMBLY

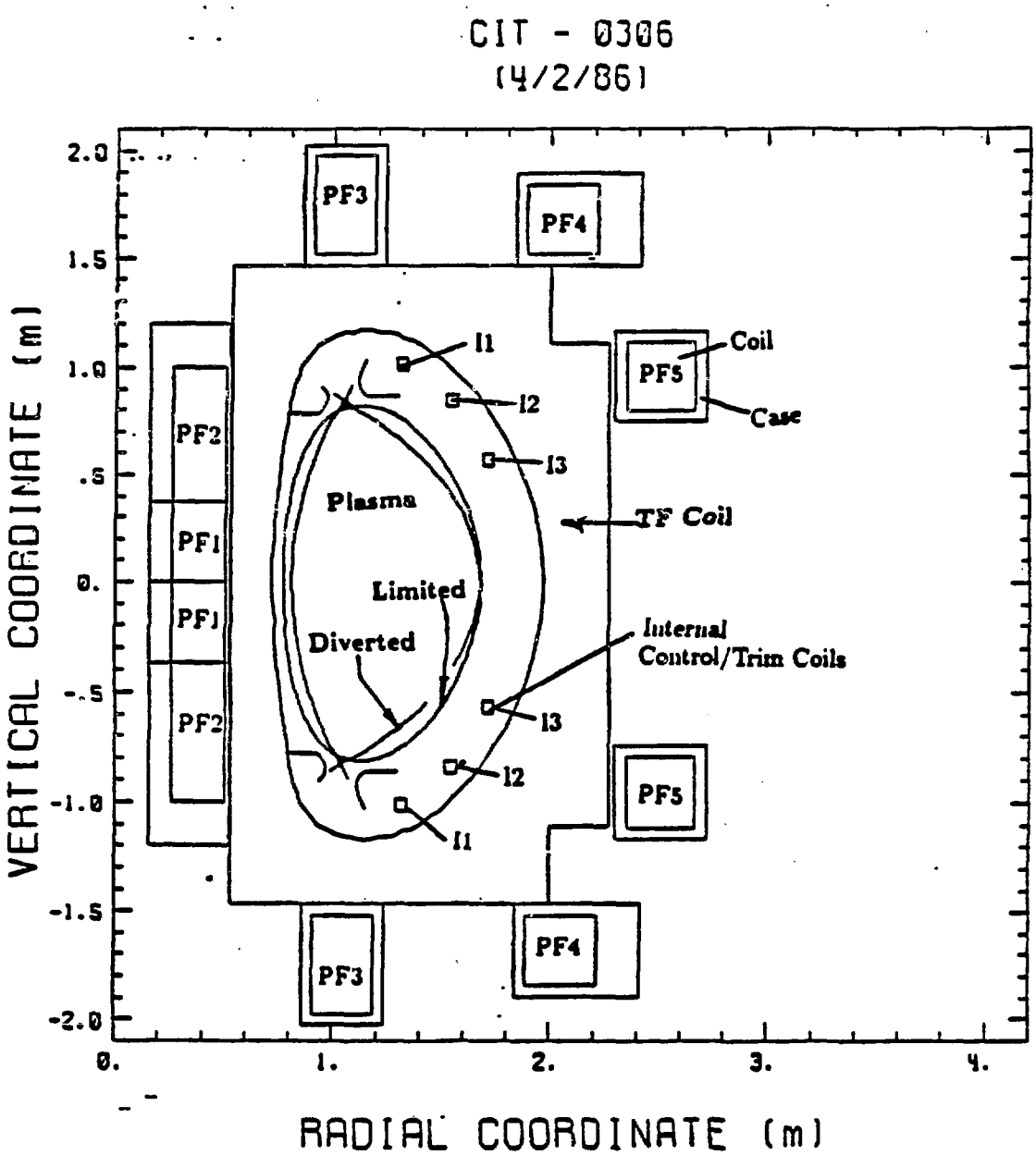

Figure 4.8-1

ELEVATION SHOWING RELATION OF PF COILS

TO TF COIL, DIVERTOR PLATES AND STABILIZATION COILS

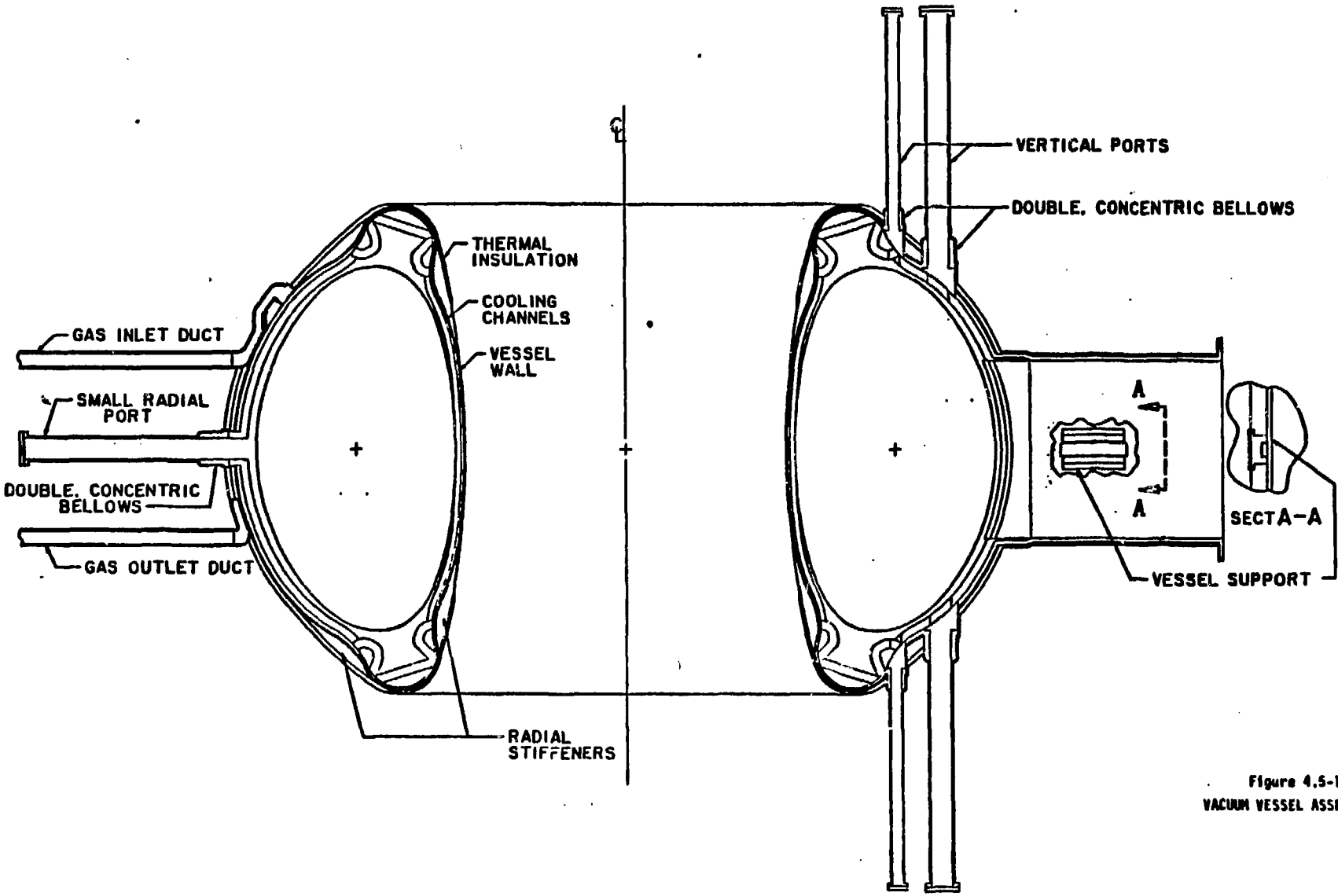

Figure 4.5-1
VACUUM VESSEL ASSEMBLY

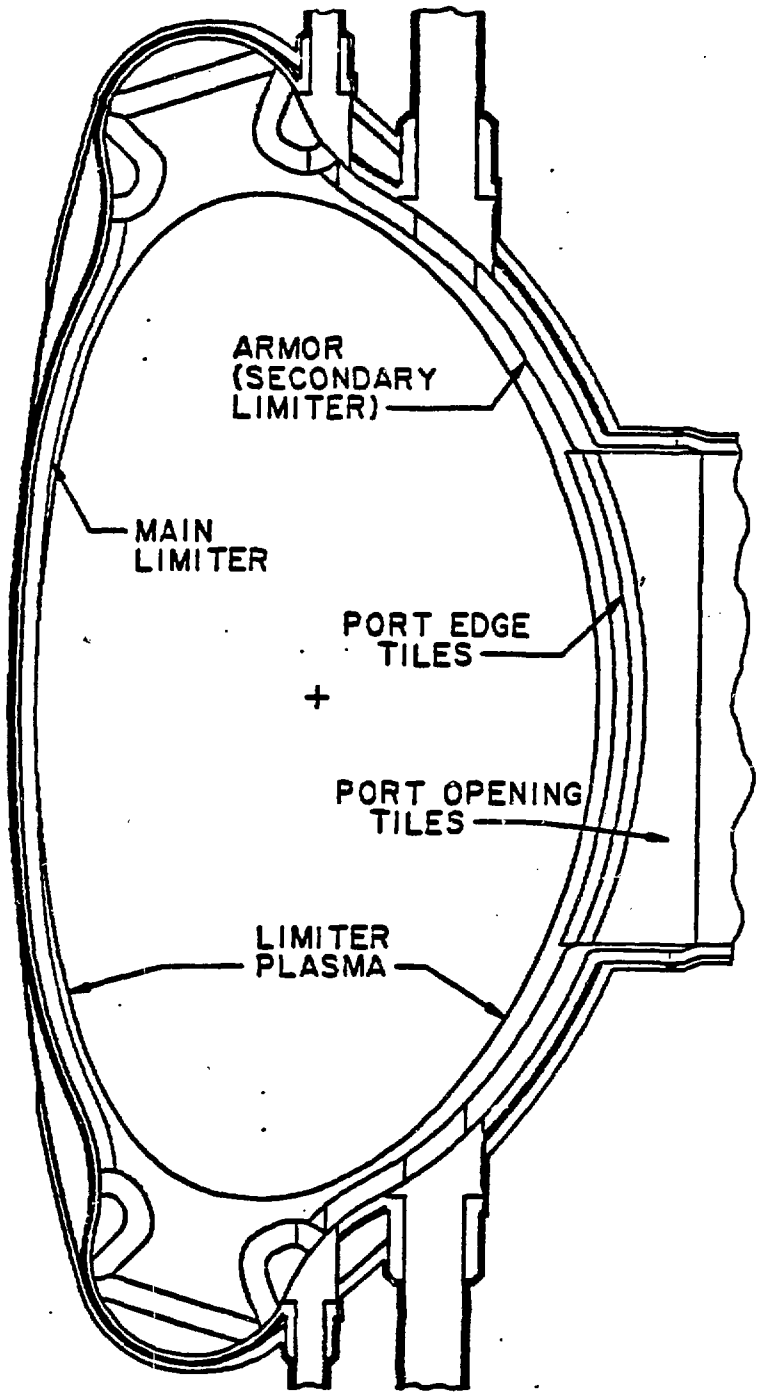

Figure 4.4-1

FIRST WALL CONFIGURATION

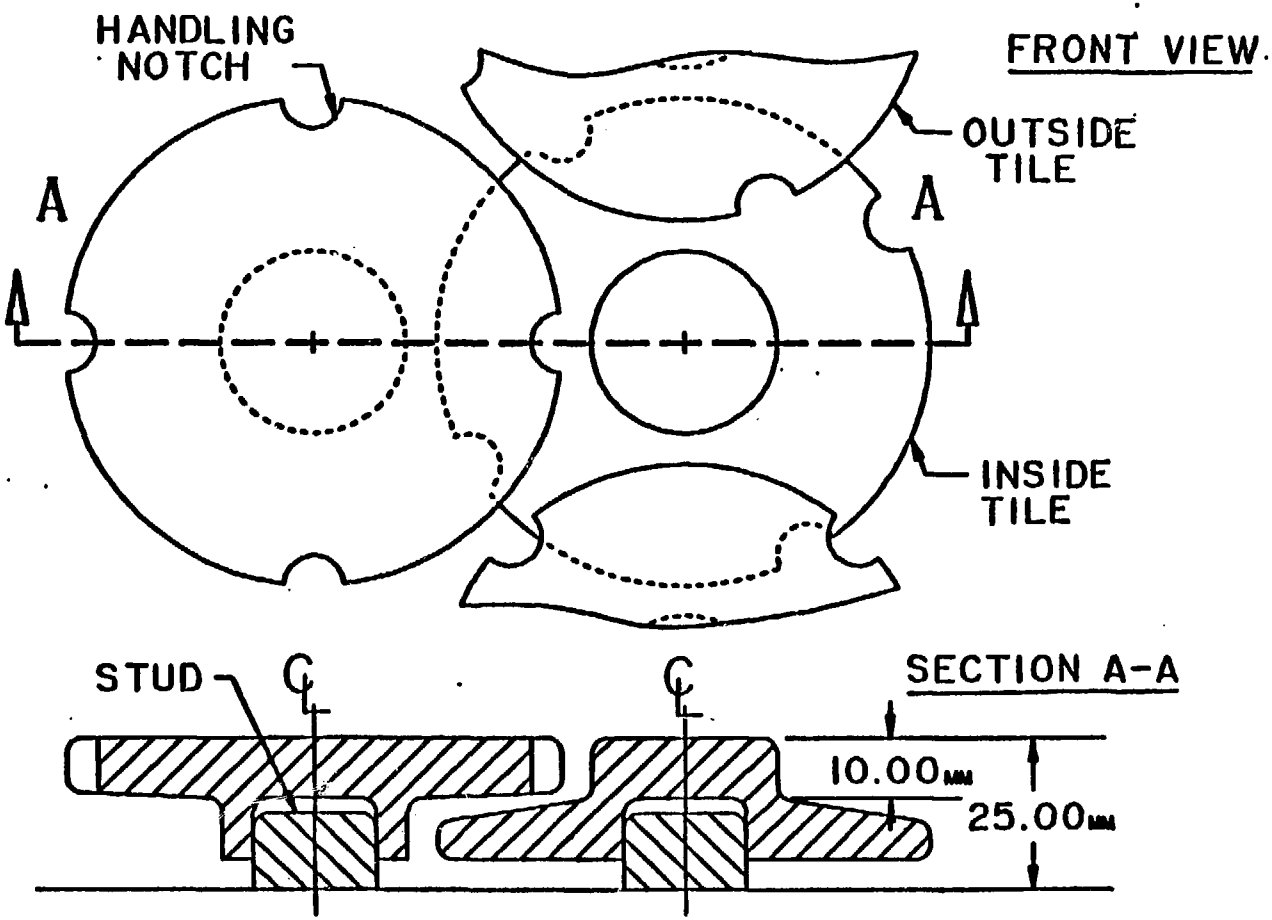

Figure 4.4-2
FIRST WALL TILE ARRANGEMENT

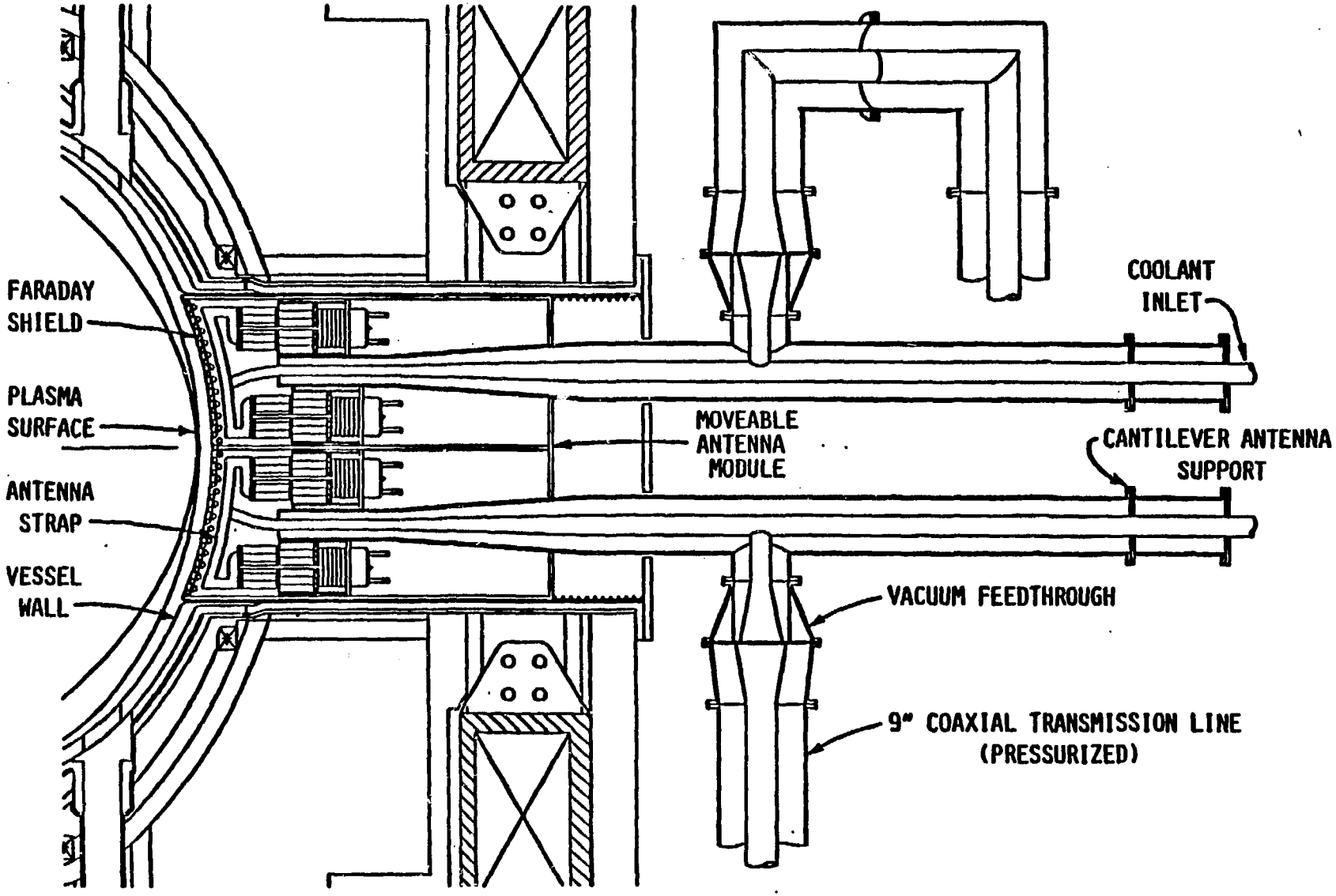

Figure 4.13-4
CIT ICRH ANTENNA MECHANICAL DESIGN

MAINTENANCE PHILOSOPHY

- o Provide As Much "Hands-on" Access and Maintenance Capability As Possible Within The Test Cell.

- o Prior To D-T Operation - All "Hands-on" Capability Exists Outside Vessel. In-vessel Operations May Require Remote Capability Because Of Port Size Limitations

- o After D-T Operations Commence - All In-vessel Operations Require Remote Capability;
  Within Test Cell, External To Device, Close-in Shielding Will Permit Personnel Access One Day After Shutdown

- o Planned Maintenance Includes Components Inside Vessel And External To Device (Auxiliary Equipment); No Planned Maintenance For Lifetime Designed Components (Vessel, Coils)

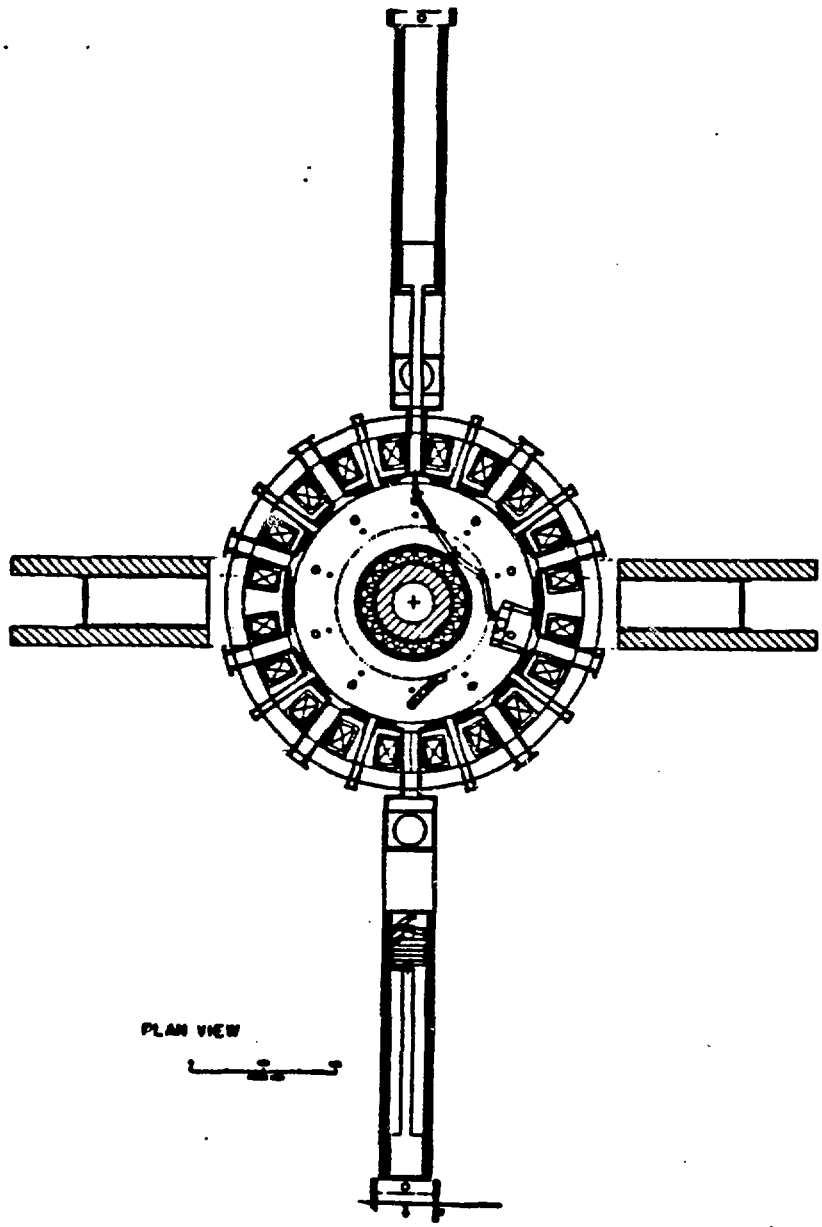

Figure 1.6-4
CIT IN-VESSEL ARTICULATED ARM

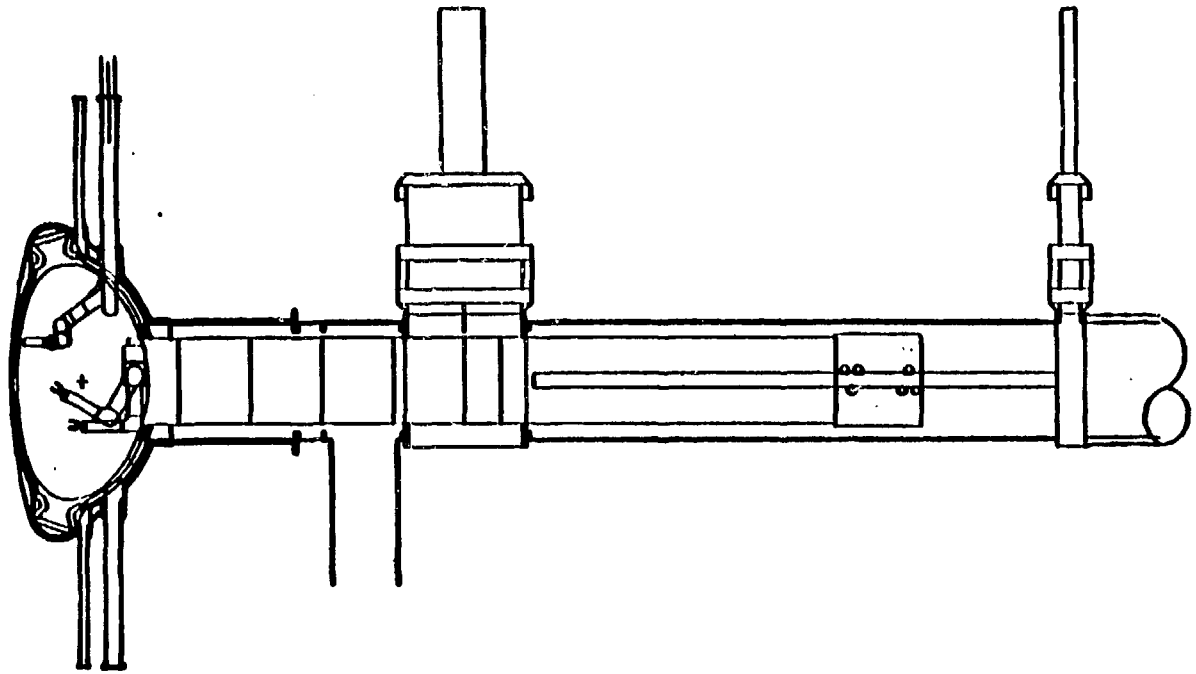

Figure 1.6-5

CIT AIR-LOCK STORAGE FOR IN-VESSEL ARTICULATED ARM

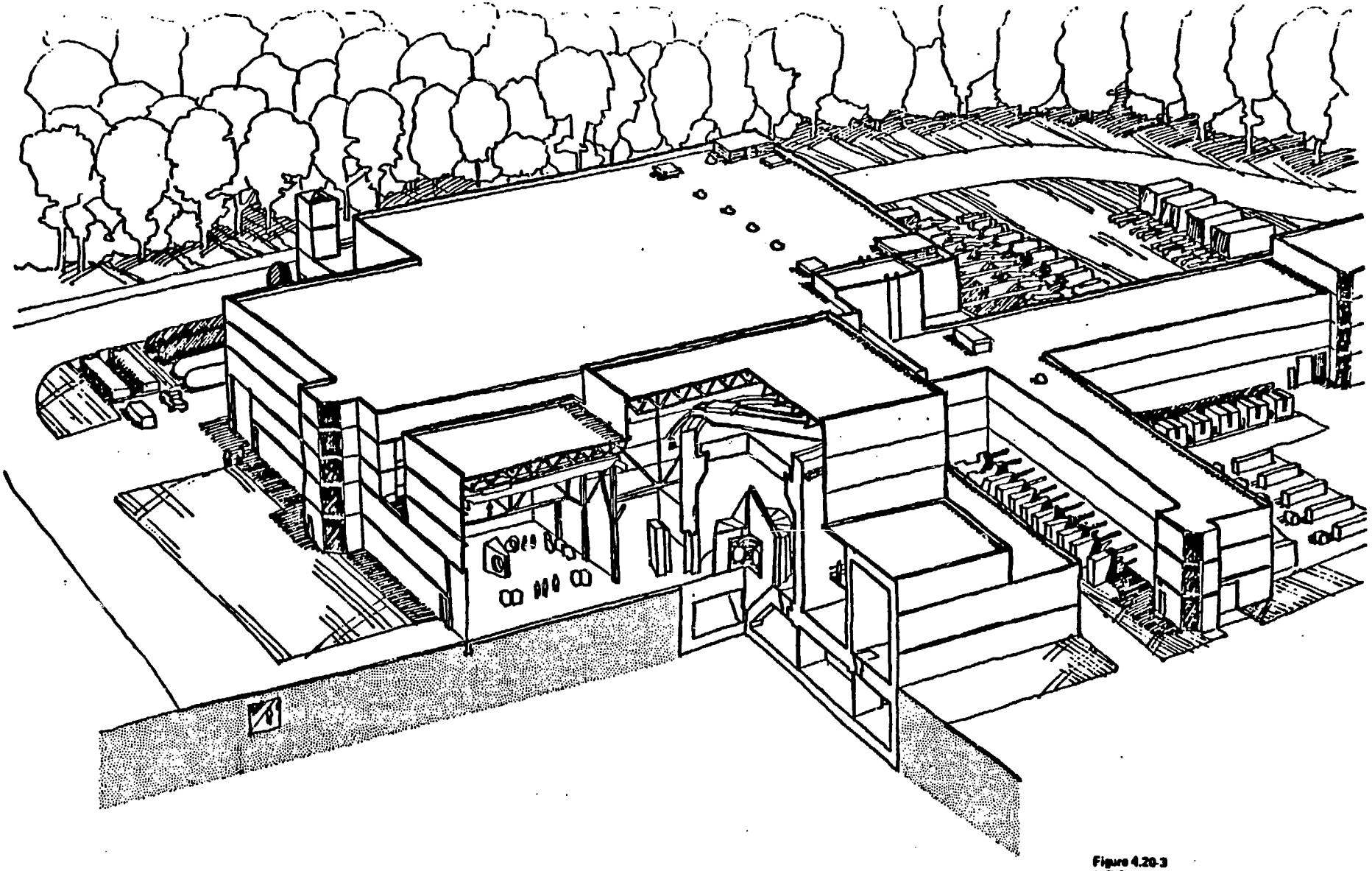

Figure 4.20-3
CIT Support Building Cutaway View

SCHEDULE

- FY 1987 — Cc ıplete Conceptual Design
- FY 1988 — Initiate Detailed Design And Component Fabrication
- FY 1992 — Complete Device Installation
- FY 1993 — First Plasma Early In Year