THE DEVELOPMENT AND USE OF 60 kV, 80 kV, AND 150 kV FLOATING DECK MODULATORS FOR HIGH VOLTAGE PROTECTION OF MULTIMEGAWATT ION BEAM ACCELERATORS*

By acceptance of this article, the publisher recipient acknowledges the U.S. Government's right to retain a non-exclusive, royalty-free license in and to any copyright covering the article.

G. C. Barber, N. S. Ponte,† and G. Schilling††
Oak Ridge National Laboratory
Oak Ridge, Tennessee 37830

CONF-771029--67

The development of high power ion sources for neutral beam injectors created a demand for modulators capable of switching the high currents and voltages associated with the ion sources. Extraction currents of 60 A at 40 kV have been produced by utilizing a 60 kV floating deck modulator interfaced to a high voltage power supply. The modulator is operated in a series mode to repetitively pulse power to the ion beam accelerator. Current monitoring and other protective circuits provide interrupt commands to the series switch tube when faults occur. The constant current characteristics of the water cooled tetrode and the rapid response of the protective circuits effectively limit the fault energy to the ion source.

Three of the 60 kV decks have been modified and stacked in a series configuration to supply 150 kV, 50 A pulses. This system supplies power for development of higher-energy multi-grid sources. In this system attention has been focused on forced voltage sharing of the three decks and on protective circuits for fault conditions. All control signal processing and conditioning is performed at ground level. Fiber optic links are used to interface with the high potential associated with the floating decks. A shunt modulator incorporated with this system provides regulation of the voltage to the ion source gradient grid.

Future modulator development includes a system to deliver 100 A at 80 kV. This will be accomplished with parallel operation of recently developed 100 kV switch tubes. Many of the techniques employed in the 60 kV system will be applied to this system. By properly combining tubes in series and parallel 100 A, 200 kV may be achievable in the future.

Introduction

The continuing development of neutral beam injector systems of higher energy has required a corresponding development of a series switch capable of switching the high voltage to the accelerating grid of the ion beam accelerator. Neutral beam development at Oak Ridge National Laboratory (ORNL) has progressed from the 30 kV, 15 A ORMAK ion sources to the 40 kV, 60 A sources for the Princeton Large Torus (PLT). Present activity is directed toward 60-80 kV, 100 A sources, and the the development of high energy multistage ion accelerators.[1] Each of the modulator systems associated with these developments utilizes series high power tetrode vacuum tubes.

60 kV/60 A Modulator

The 60 kV, 60 A modulator was built for the development of injectors for PLT and ORMAK Upgrade. The basic circuit shown in Fig. 1 was based on the 40 kV, 15 A ORMAK modulators.[2]

The input pulse originates in a pulse generator syncronized with other commands to the neutral beam electronics system. This pulse drives a light-emitting diode that is optically coupled to a phototransistor on the driver deck of the floating deck modulator. Two solid state amplifier stages drive a high voltage switching transistor into saturation. The switching transistor provides the grid drive for two Eimac 4CX-1500-B tetrodes operating in parallel as the driver stage. A voltage regulator on the driver screen supply controls the grid drive of the final high power switch tube.

The high power switch tube is an Eimac X-2170 vacuum tetrode. Spark gap protection is provided from plate to ground and from screen and control grids to cathode. In addition the tube and ion source is protected by an electronic crowbar which fires if the switch tube fails to block on ion source breakdown.

The ion source current is sampled by a current sensor isolated from the floating deck. The current sample is amplified and compared with a preset current trip level. If a fault occurs, the comparator output triggers a pulse generator that provides a pulse output of approximately 500 μs duration. This pulse interrupts the output switch tube and permits the fault to clear. The switch tube resumes conduction and high voltage is applied again to the ion accelerator. Each time the pulse generator is triggered, indicating a fault, a stair-step generator is triggered and steps downward. A specified number of faults during a pulse can be controlled by the trip count control. When the stair-step output goes negative, the modulator is locked out for the remainder of the pulse. The function of the clock shown in Fig. 1 is to control the time interval before another pulse may be generated.

Several special design requirements unique to high voltage modulator design have been considered. These include anode and filament water column resistance, filament run-up and run-down, energizing the screen supply only when plate voltage is present, and ensuring that adequate bias voltage is present before high voltage is applied. Noninductive resistors are used in critical locations, and bypass capacitors are utilized when required. Low level circuits are protected by resistors, capacitors, and transient absorbing zener diodes.

For PLT source development the modulator has delivered 40 kV, 60 A at pulse lengths up to 300 ms. Independent parameters of 50 kV, 70 A, and 500 ms have been attained.

Several modifications have been considered for the 60 kV, 60 A systems. Two modifications that concern matching the pulse output of the modulator to the ion source plasma density will be tested in the near future. One method will be shaping the input pulse to the modulator so that it will correspond to the ion source plasma density. The second method is to pre-load the series modulator output with a shunt modulator-regulator system to minimize voltage variations when beam current is initiated.

150 kV/50 A Modulator

The 150 kV, 50 A modulator system shown in Fig. 2 is essentially three 60 kV, 60 A modulators stacked for the series switch to the accel grid of the ion source and a shunt modulator to regulate the voltage on the gradient grid of a two-stage ion source.

*Research sponsored by the Department of Energy under contract with Union Carbide Corporation.
†Present address, Lawrence Livermore Laboratory.
††Present address, Princeton Plasma Physics Laboratory.

MASTER

DISTRIBUTION OF THIS DOCUMENT IS UNLIMITED

Minor modifications of the 60 kV, 60 A modulator consist of removing most of the low level protective circuits from the floating deck and locating them at ground potential. Fault current is sensed on the floating deck and optically coupled to ground. The pulse command for the three decks originates in three series driven light-emitting diodes. Delay time and rise time are carefully controlled up to the control grids of the final switch tubes. Static and transient voltage division across the separate decks is forced with resistive and capacitive dividers. A differential voltage is sampled across each switch tube and if this voltage exceeds a preset level, all tubes are forced to the blocking state.

The gradient grid voltage is controlled by an Eimac Y-647 tetrode vacuum tube. As shown in Fig. 2 current flow is assumed to be away from the gradient grid of a two-stage ion source. The function of the gradient modulator is to regulate the voltage at the gradient grid.

This system has not been tested to full rating. The tests indicate a rise time of 35 μs and a fall time completely dependent on the load impedance at the ion source. Adequate tests to conclude the effects of high output capacitance and the feasibility of this system for multistage ion accelerator work have not been made at this time.

80 kV/100 A Modulator

Design has been started on a modulator to deliver 100 A at 60-80 kV. Two Eimac X-2062J tetrodes will be connected in parallel for this modulator. The problems do not appear to be as severe as those of series operation. Preliminary plans are to switch both screen and control grids. All modulator development probably will be impacted by new tube development currently in progress.

References

1. O. B. Morgan et al., "The Development of Neutral Injection Heating for Large Tokamaks and Reactors at ORNL," presented at the International School of Plasma Physics Symposium on Plasma Heating and Toroidal Devices, September 6-17, Varenna, Italy.

2. N. S. Ponte and G. Schilling, "Modulators for High Power Neutral Beam Systems," Proc. Sixth Symp. on Engineering Problems of Fusion Research, November 18-21, 1975, San Diego, California.

NOTICE

This report was prepared as an account of work sponsored by the United States Government. Neither the United States nor the United States Department of Energy, nor any of their employees, nor any of their contractors, subcontractors, or their employees, makes any warranty, express or implied, or assumes any legal liability or responsibility for the accuracy, completeness or usefulness of any information, apparatus, product or process disclosed, or represents that its use would not infringe privately owned rights.

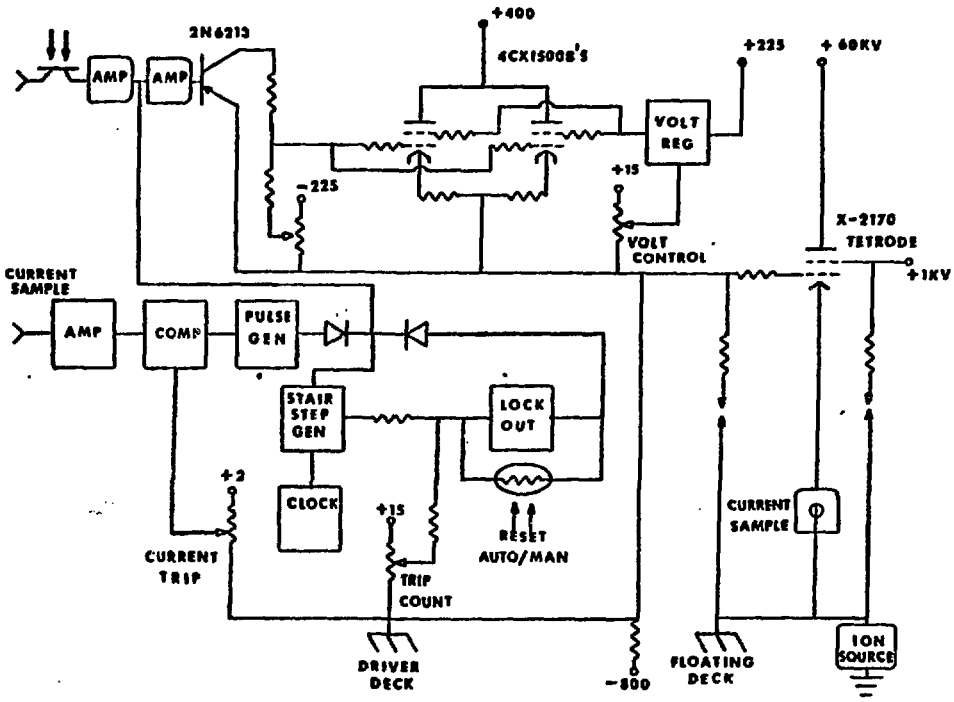

Figure 1. 60 kV – 60 A Modulator

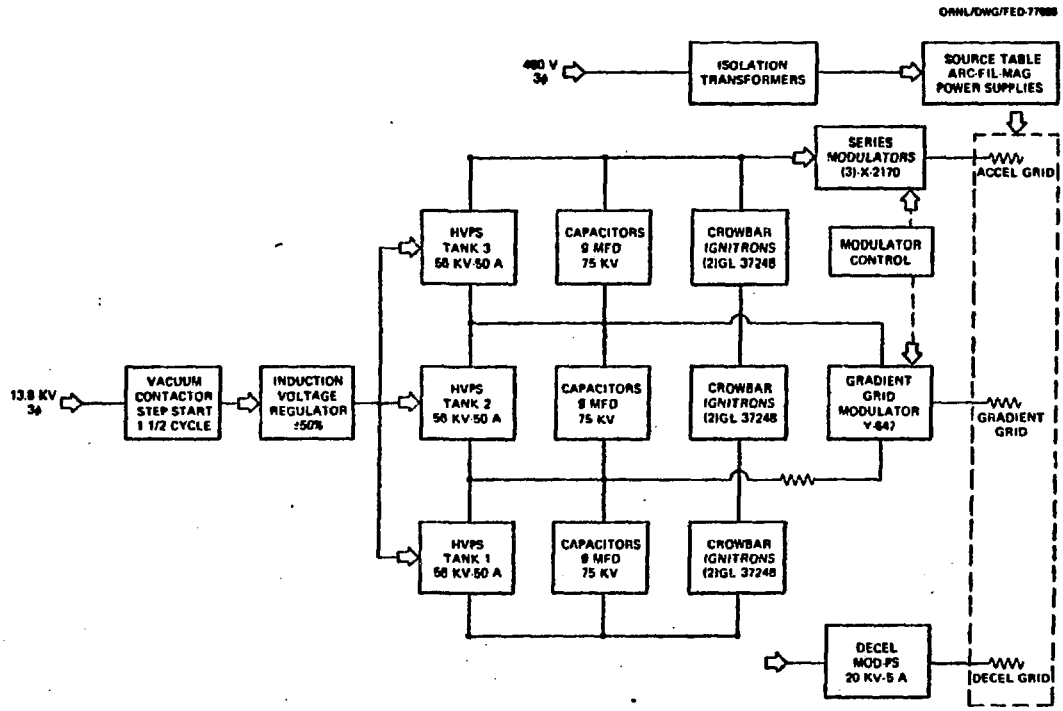

Figure 2. 150 kV – 50 A Modulator