BNL--31072

BNL 31072

DE82 013851

CONF-820605--18

MASTER

DISCLAIMER

This report was prepared as an account of work sponsored by an agency of the United States Government. Neither the United States Government nor any agency thereof, nor any of their employees, makes any warranty, express or implied, or assumes any legal liability or responsibility for the accuracy, completeness, or usefulness of any information, apparatus, product, or process disclosed, or represents that its use would not infringe privately owned rights. Reference herein to any specific commercial product, process, or service by trade name, trademark, manufacturer, or otherwise, does not necessarily constitute or imply its endorsement, recommendation, or favoring by the United States Government or any agency thereof. The views and opinions of authors expressed herein do not necessarily state or reflect those of the United States Government or any agency thereof.

HYFIRE: A TOKAMAK/HIGH-TEMPERATURE ELECTROLYSIS SYSTEM†

J.A. Fillo*, J.R. Powell*, R. Benenati*, T.C. Varljen**, J.W.H. Chi**, and J.S. Karbowski**

*Dept. of Nuclear Energy, Brookhaven National Laboratory, Upton, NY
**Fusion Power Systems Dept., Westinghouse Electric Corporation, Pittsburgh, PA

ABSTRACT

The HYFIRE studies to date have investigated a number of technical approaches for using the thermal energy produced in a high-temperature Tokamak blanket to provide the electrical and thermal energy required to drive a high-temperature (>1000°C) water electrolysis process. Current emphasis is on two design points, one consistent with electrolyzer peak inlet temperatures of ~1300°C, which is an extrapolation of present experience, and one consistent with a peak electrolyzer temperature of 1100°C. This latter condition is based on current laboratory experience with high-temperature solid electrolyte fuel cells. Our major conclusion to date is that the technical integration of fusion and high-temperature electrolysis appears to be feasible and that overall hydrogen production efficiencies of 50 to 55% seem possible.

KEYWORDS

High-temperature water electrolysis; hydrogen; electrolyzer; fusion; Tokamak; high-temperature blanket.

INTRODUCTION

The ability of high energy neutrons produced by fusion reactions to deeply penetrate and deposit energy in surrounding structures offers the prospect of developing high temperatures in suitable blanket materials, which would enhance the efficiency of thermal-to-electrical power conversion as well as the utilization of high temperature processes (>1000°C) for the production of hydrogen (Fillo, 1981). The objective of the work described in this paper is to investigate the potential merits of coupling a Tokamak fusion reactor with a high temperature blanket to a high-temperature electrolysis process.

In prior work (Lazareth, 1981), the STARFIRE commercial Tokamak fusion reactor (Baker, 1980) was directly used as the fusion driver. This paper describes a new design obtained by scaling the basic STARFIRE design to permit the achievment of a blanket power of 6000 MW(th). The guidelines for the current HYFIRE study are essentially similar to those used in the development of the STARFIRE, reference

†Work performed under the auspices of the U.S. Department of Energy.

NOTICE

PORTIONS OF THIS REPORT ARE ILLEGIBLE. It has been reproduced from the best available copy to permit the broadest possible availability.

DISTRIBUTION OF THIS DOCUMENT IS UNLIMITED

Tokamak reactor design. The final HYFIRE plant embodiment will represent the tenth of a kind first generation plant. STARFIRE technology assumptions and design features are used to the extent possible to permit concentration on high-temperature blanket and balance-of-plant design issues. This approach will permit a direct comparison with the economics of a fusion electric plant.

In addition to the requirement for tritium self-sufficiency, an important ground rule for this initial series of studies was that hydrogen would be the only product produced for sale. Thus, the electrical generation equipment and the overall power conversion process are sized to exactly provide the electrical energy required to operate the Tokamak, electrolysis plant, and balance-of-plant systems. The possible operational and economic advantages of trading off electrical production against hydrogen production is a subject for future optimization studies.

THE FUSION DRIVER

Previous HYFIRE fusion high-temperature electrolysis plant studies (Lazareth, 1981) used the STARFIRE reactor design directly. These studies indicated significant advantages would be gained by going to a somewhat larger device design. The specific scale-up criterion used was the attainment of a blanket thermal power of 6000 MW(th), while maintaining the reference STARFIRE neutron wall loading of 3.6 MW/m.

TABLE 1 Summary of HYFIRE and STARFIRE Plasma Parameters

Parameter (units)	STARFIRE	HYFIRE
Major radius (m)	7.0	8.5
Minor radius (m)	1.94	2.36
Electron density (m^{-3})	1.17×10^{20}	1.12×10^{20}
D^+ or T^+ density (m^{-3})	0.40×10^{20}	0.36×10^{20}
Z_{eff}	3	3
Burn fraction	0.40	0.53
T_2 fueling rate (g/h)	56	64
Electron kT (keV)	16.8	16.8
Ion kT (keV)	23.5	25.0
Confinement, $\tau_{E,e}$(s)	3.6	5.1
Confinement, $\tau_{E,i}$(s)	10.0	16.0
Confinement, τ_p(s)	1.8	2.5
r.f. power (MW)	90.4	120
r.f. frequency (10^9 s^{-1})	10.0	9.7
Plasma current (mA)	10.4	12.3
Plasma beta (%)	6.7	6.7
Field-on-axis (T)	5.85	5.74
Fusion power (MW)	3500	5300

Key STARFIRE physics assumptions were retained in the scale-up process. These assumptions were: a) hot ion-mode plasma operation with the preferential cooling of electrons; b) r.f. power for plasma heating and current drive; c) steady-state operation; d) enhanced radiation mode (high Z_{eff}) through the injection of iodine; and e) fueling by recycling and gas puffing.

The COAST (Sink, 1979) Tokamak system code was used to perform the scale-up computations in a self-consistent fashion, using the above constraints and assumptions.

This code will subsequently be used to develop capital cost estimates for the Tokamak system, again using component cost models based on STARFIRE.

Table 1 summarizes the baseline HYFIRE plasma parameters obtained through the scale-up process and compares them with equivalent STARFIRE parameters. An important consequence of the scale-up is the relative improvement in blanket surface area coverage. The overall increase in torus surface area obtained in going from a major radius of 7 to 8.5 m is proportionately larger than the associated increase in surface area devoted to r.f. waveguide, vacuum pumping, and limiter interfaces.

THE HIGH-TEMPERATURE REACTOR BLANKET

The key technological development required for the consideration of fusion as a heat source for hydrogen production is a high-temperature blanket. The two-temperature approach, first proposed by Powell and co-workers (1974) for minimum activity blankets, provides for the deposition of the bulk of the neutron energy in a hot interior region which is thermally insulated from a cooler structural shell. Heat is extracted at two different temperature levels by two different coolant streams. This blanket design approach is the key difference between the STARFIRE and HYFIRE concepts, with the exception of relative size.

The HYFIRE blanket is required to provide high-temperature steam for the electrolysis process, thermal energy for efficient generation of electricity to operate the plant, and to breed sufficient tritium to compensate for burnup and process losses. Two types of blanket modules have been designed to meet these requirements, a steam-cooled "HTE" module with a tritium breeding zone and a He-cooled tritium breeding "power" module. The relative numbers of each type of module is an important design variable which can be adjusted to trade tritium production off against high-temperature steam and electrical power production. In each case, the first wall and blanket structural material is PCA (Prime Candidate Alloy) stainless steel as in STARFIRE; however, in HYFIRE, the steel shell is cooled by pressurized water. The modules are arranged along toroidal field lines since this minimizes differences in overall blanket configuration and associated maintenance procedures between STARFIRE and HYFIRE.

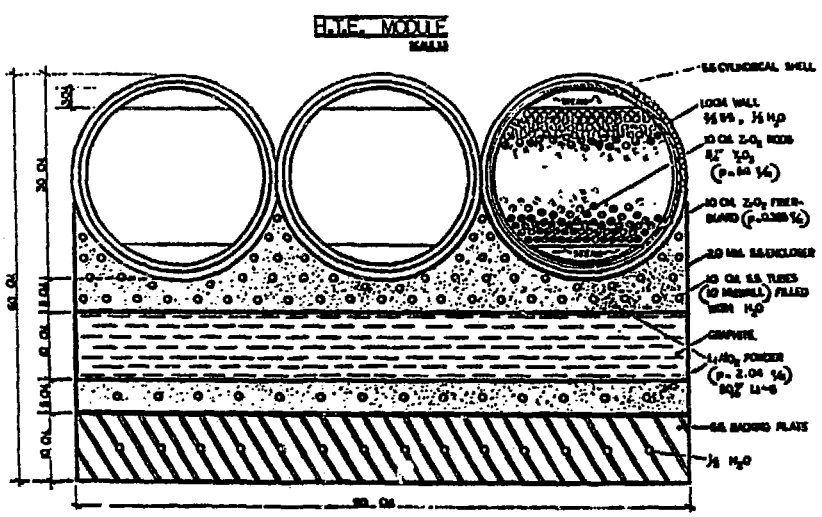

Fig. 1. Steam-cooled blanket module.

The interior of the HTE steam modules, shown in Fig. 1, consists of rods of ZrO_2 which are thermally insulated from the steel shell. Materials compatibility tests carried out by Horn and colleagues (1979) in steam and steam/hydrogen indicate that ZrO_2 is suitable for long-term service, up to at least 1500°C. As with all blanket materials at this time, the integrity of this material with respect to long-term irradiation by high energy neutrons is uncertain.

The HTE module utilizes a relatively thin tritium breeding layer outboard of the steam-cooled HTE zone. Consistent with the STARFIRE design, the tritium breeding medium is $LiAlO_2$. The design employs at least two structural steel boundaries to minimize the potential of tritium leakage into the HTE steam circuit.

The tritium breeding/power production module, shown in Fig. 2, also employs a low-temperature water-cooled shell. The interior region is He-cooled and contains two distinct zones. The inboard zone contains a beryllium multiplier as well as $LiAlO_2$; the outboard zone consists of SiC and $LiAlO_2$. Since interior structural materials are minimized, the blanket may operate at relatively high temperatures, which promotes tritium removal as well as efficient power conversion. The primary He steam (at ∿30 atm) exchanges heat with a secondary He power conversion steam (at ∿70 atm) in small heat exchangers outboard of the blanket.

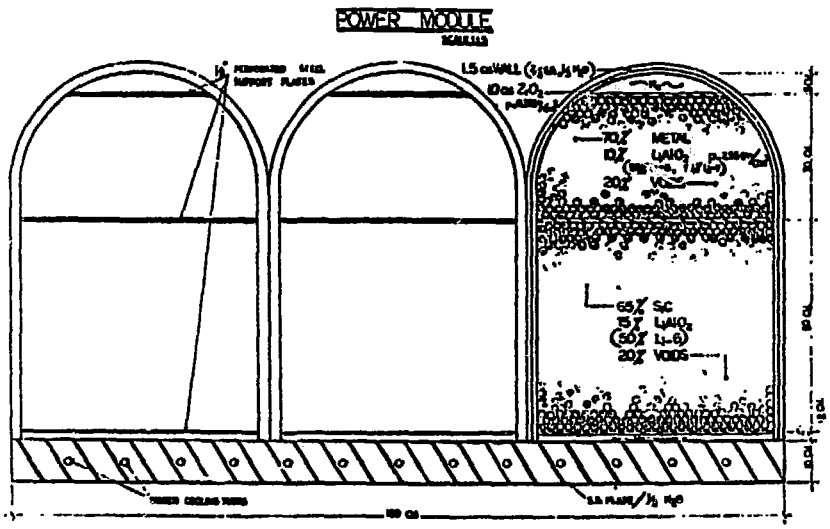

Fig. 2. Helium-cooled blanket module.

THE HIGH-TEMPERATURE ELECTROLYSIS PROCESS

In view of thermodynamic efficiency limits on thermal-to-electrical power conversion cycles, it is clearly desirable to operate water decomposition processes such that the ratio of thermal energy input to electrical energy input is maximized, consistent with practical technological constraints. The ratio of thermal-to-electrical energy increases linearly with electrolysis temperature. The successful development, on a laboratory scale, of high-temperature fuel cells (Feduska, 1978) offers the opportunity to consider the use of this technology for efficient high-temperature electrolysis.

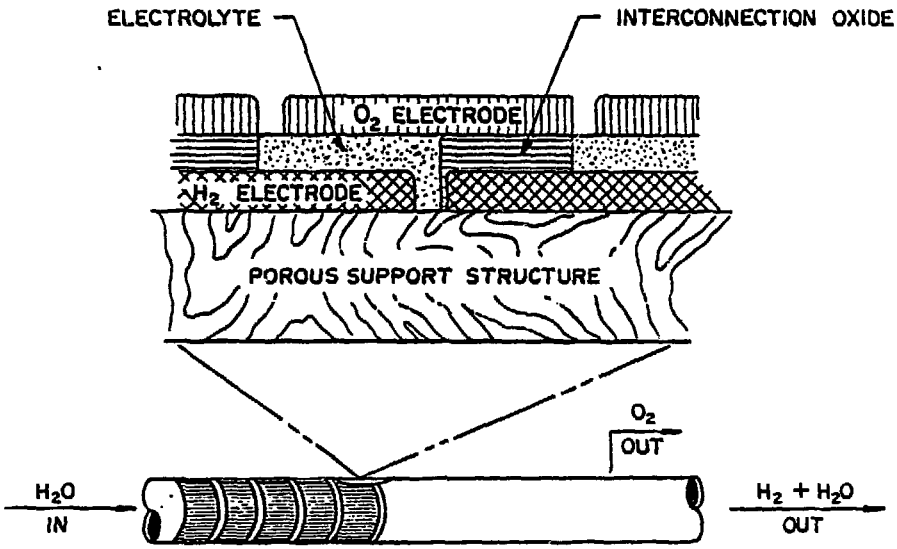

Fig. 3. Sectional view of the high-temperature electrolyzer cell stack based on the Westinghouse solid electrolyte fuel cell.

The solid oxide electrolyte fuel cell technology, developed by Westinghouse, has been tested satisfactorily for thousands of hours at operating temperatures of 1000°C. By operating in reverse, with dc power applied, these cells have the potential for very high fusion to hydrogen energy conversion efficiencies.

The basic electrolyzer cell stack configuration is shown in Fig. 3. A succession of this electrode layers of suitably doped ceramics are deposited on a thick-walled porous ceramic tube of yttria-stabilized zirconia. These thin layers comprise the hydrogen electrode, the electrolyte (yttria-stabilized zirconia) that permits ion transport (but not free electron transport), the oxygen electrode, and the interconnection layer between cells. The electrodes are electrically connected in series along each tube to minimize I^2R losses.

Arrays of electrolyzer tubes connected in parallel within a large pressure vessel comprise an HTE process module (Sverdrup, 1973), Fig. 4. The diameter of the vessel is 4.5 m and the length is about 11 m. The central plenum recieves the high-temperature steam generated in the HTE blanket modules. The steam flows through the center of each electrolyzer tube and the exit steam consists of a lower temperature steam and hydrogen mixture which is collected in adjacent plenums. In this way, the thermal energy required for the electrolysis of steam is transported into the electrolyzer as enthalpy of the process blanket steam rather than requiring that it be brought in via some other heat transfer fluid. This generally simplifies the process design and connections to the electrolyzer tubes, plumbing requirements and so on while at the same time limiting the conversion of steam to H_2/O_2 during its transit through the electrolyzer so as to keep the electrolyzer temperature at a high average value. For example, at the HYFIRE design point, the termal energy requirements amount to about 22 kcal/g-mol, and to provide this much energy from the enthalpy of the process steam would require an excessive temperature drop in the steam passing through the cell and also an excessively high inlet steam temperature. Limiting the conversion to about 10% restricts the temperature drop needed to provide the thermal energy to about 100°C and has the very beneficial effect of restricting the required steam temperature to more realizible values, i.e., ~1300°C.

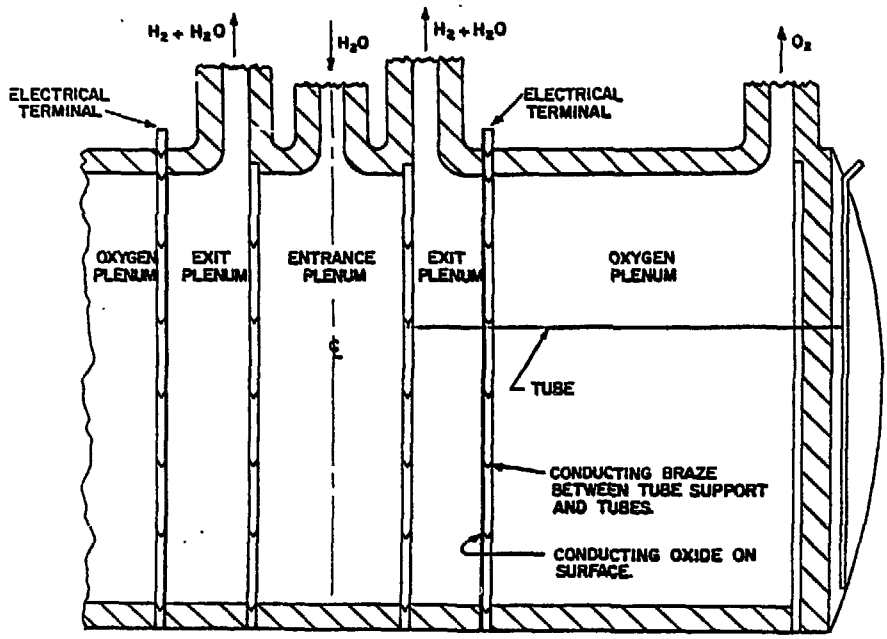

Fig. 4. High-temperature electrolysis vessel.

An additional advantage of limiting the conversion per pass can be seen by examining the Nernst equation, Eq. (1):

$$E^o = \frac{RT}{4F} \ln\left(\frac{P_{H_2}}{P_{H_2O}}\right) , \tag{1}$$

which describes the local value of the open-circuit voltage as a function of gas composition. In Fig. 5, derived from this equation, the area under the curve is

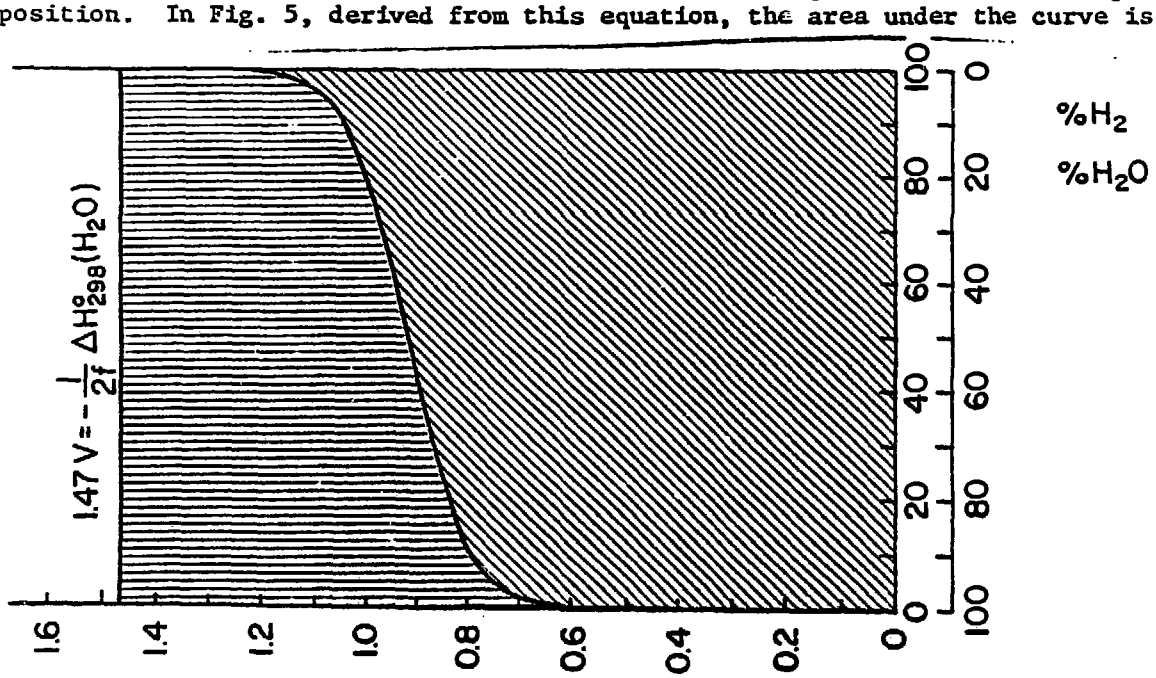

Fig. 5. Cell voltage/hydrogen concentration.

directly proportional to the work which must be done electrically to split one mol of water at 1000°C. The increase in the electrical energy required at high conversion per pass is clearly indicated.

There are, of course, certain disadvantages associated with low conversion per pass stemming from the fact that some of the energy required to raise the steam is dissipated in the condenser and also from the fact that some effort is required to separate (and recycle) the undecomposed steam from the product hydrogen. Both of these effects result in a lowering of the overall cycle efficiency and are included in the detailed cycle analysis.

An important issue in the application of the solid oxide electrolyte technology is suitability of electrolyzer operation at peak inlet temperatures of 1000° to 1100°C, which is consistent with present experience (Feduska, 1978), versus operation at ~1300°C which will yield improved cycle efficiency at the expense of development risk. As a consequence, two point designs are being pursued.

FUSION-HIGH TEMPERATURE ELECTROLYSIS SYSTEM

A complete process flow sheet, shown in Fig. 6, has been developed for the system coupling the high-temperature blanket to the high-temperature electrolysis and electrical power generation subsystems, and material flow and energy balances accomplished through the development of a digital computer code to represent the overall cycle.

The overall plant can be thought of as having four principle process circuits; a) the low-temperature water loop which extracts heat from the front wall of the blanket elements; b) the helium loop; c) the steam-hydrogen loop which provides the dual function of electricity generation and hydrogen production; and d) the waste oxygen circuit. The steam-hydrogen loop is by far the most involved.

Low-temperature water which extracts heat from the first wall and high-temperature helium are used to raise steam for the high pressure turbine which is then used to

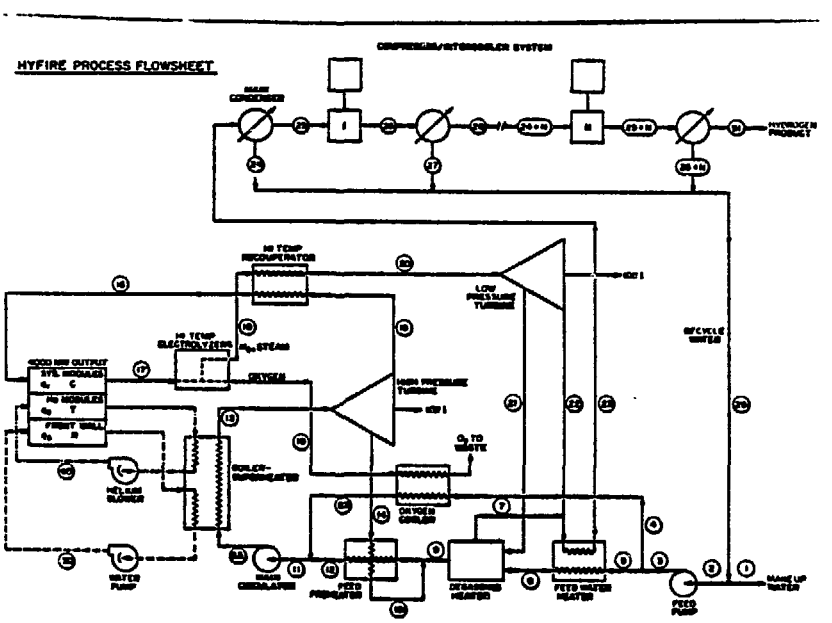

Fig. 6. HYFIRE process flow sheet

make electricity to operate the electrolyzers, fusion reactor and balance-of-plant.

After exiting the electrolyzer, the oxygen and steam/hydrogen mixture are sent to a recouperator where steam from the high pressure turbine is raised in temperature and sent to the blanket. Oxygen flows through an oxygen turbine. It is there either wasted or stored.

Since only about 11% of the steam is converted to hydrogen per pass, some effort is required to separate and recycle the steam so that the product hydrogen can meet purity specifications. The steam is condensible at normal ambient conditions and the hydrogen is not. Thus a simple recovery scheme would involve cooling of the mixture followed by condensation of the steam and subsequent phase separation. The hydrogen purity achievable from such a process would depend on the residual partial pressure of water vapor remaining in the gas phase which would, in turn, depend on the degree to which the condensate could be cooled. The equilibrium vapor pressure of water as a function of temperature clearly indicates that temperatures significantly lower than those achievable with conventional cooling water would be required if cooling and condensation were the sole means of product separation.

The product hydrogen emerging from the condenser following the low pressure turbine (stream 25 in Fig. 6) is only about 13% hydrogen, the balance being uncondensed water vapor. The total pressure of this stream is just under 3 psia. The partial pressure of the product hydrogen in this stream is only about 1/3 psia and must be increased to about 10 atm. A series of compressors is used to bring about this pressure increase and after each stage of compression, additional water can be removed by condensation. Thus, as the hydrogen partial pressure is increased, so is its purity (dryness) and when it leaves the process, it contains less than 1% residual water vapor, or in other words, a product hydrogen stream in excess of 99% purity can be achieved in this way.

Table 2 summarizes key cycle parameters associated with the high-temperature design point. These parameters are not final, and are subject to minor iteration. The thermal power to the electrolyzers is ~40% of the total power required to operate the electrolyzers for electrolysis of steam.

TABLE 2 Summary of HYFIRE Plant Parameters

Gross blanket thermal power, MW(th)	6000	blanket
Steam exit temperature, °C	1307	blanket
Helium exit temperature, °C	732	
Pressure turbine inlet temperature, °C	538	high
Pressure turbine inlet pressure, MPa	8.50	high
Pressure turbine inlet temperature, °C	474	low
Pressure turbine inlet pressure, MPa	3.38	low
Electrical power to electrolyzers, MW(e)	1564	
Thermal power to electrolyzers, MW(th)	920	
Production: metric ton/day	1721	
kg/hr	71692	
Fusion power to hydrogen conversion efficiency, %	50	

SUMMARY AND CONCLUSIONS

The HYFIRE studies to date have investigated a number of technical approaches for using the thermal energy produced in a high-temperature Tokamak blanket to provide

the electrical and thermal energy required to drive a high-temperature water electrolysis process. Current emphasis is on two design points, one consistent with electrolyzer peak inlet temperatures of ∿1300°C, which is an extrapolation of present experience, and one consistent with a peak electrolyzer temperature of 1100°C. This latter condition is based on current laboratory experience with high-temperature solid electrolyte fuel cells.

The Tokamak driver for HYFIRE is based on the STARFIRE reference commercial fusion power plant design. A reference blanket design has been selected, incorporating modules designed to produce high-temperature steam and modules designed to breed tritium and provide process heat. An initial process design and plant layout has been completed; component cost and plant economics studies are now under way to develop estimates of hydrogen production costs and to determine the sensitivity of this cost to changes in major design parameters. Our major conclusion to date is that the technical integration of fusion and high-temperature electrolysis appears to be feasible and that overall hydrogen production efficiencies of 50 to 55% seem possible.

REFERENCES

Baker, C.C. (1980). STARFIRE--A commercial Tokamak fusion power plant study. Argonne National Laboratory, ANL/FPP-80-1.

Feduska, W. (1978). Thin film cell/battery power generating system. Westinghouse Electric Co., CO-1197-9.

Fillo, J.A. (1981). Review of fusion synfuels. Proc. 4th Top. Mtg. Tech. Controlled Fusion Res., Vol. 2, DOE, Washington, D.C., pp. 1601-13.

Horn, F.L., J. Fillo, and J.R. Powell (1979). Performance of ceramic materials in high-temperature steam and hydrogen. Proc. 1st Top. Mtg. on Fusion Reactor Mtls., Part A, North-Holland Publishing Co., Amsterdam, pp. 439-443.

Lazareth, O. J.Fillo, J.R. Powell, M. Steinberg, R. Benenati, V-D. Dang, F. Horn, D. Hsieh, H. Issacs, H. Makowitz, and J. Usher (1981). HYFIRE: A Tokamak high-temperature electrolysis system. Proc. 4th Top. Mtg. Tech. Controlled Fusion Res., Vol. 2, DOE, Washington, D.C., pp. 1639-42.

Powell, J.R. (1974). Preliminary reference design of a fusion reactor blanket exhibiting very low residual radioactivity. Brookhaven National Laboratory, BNL-19565.

Sink, D.A. (1979). User's manual for COAST-4, a code for costing and sizing Tokamaks. Westinghouse Electric Co., WFPS-TME 79-023.

Sverdrup, E.F. (1973). Design of high temperature solid electrolyte fuel cell batteries of maximum power output per unit volume. Energy Conversion, Vol. 13, Pergamon Press, New York, pp. 129-41.