PNNL-12159

Pacific Northwest National Laboratory

Operated by Battelle for the U.S. Department of Energy

Facility Effluent Monitoring Plan for the 3720 Building

RECEIVED
APR 19 1999
OSTI

March 1999

Prepared for the U.S. Department of Energy
under Contract DE-AC06-76RLO 1830

PNNL-12159

PNNL-12159

Facility Effluent Monitoring Plan for the 3720 Building

March 1999

Prepared for the U.S. Department of Energy
under Contract DE-AC06-76RLO 1830

Pacific Northwest National Laboratory
Richland, Washington 99352

DISCLAIMER

This report was prepared as an account of work sponsored by an agency of the United States Government. Neither the United States Government nor any agency thereof, nor Battelle Memorial Institute, nor any of their employees, makes **any warranty, express or implied, or assumes any legal liability or responsibility for the accuracy, completeness, or usefulness of any information, apparatus, product, or process disclosed, or represents that its use would not infringe privately owned rights**. Reference herein to any specific commercial product, process, or service by trade name, trademark, manufacturer, or otherwise does not necessarily constitute or imply its endorsement, recommendation, or favoring by the United States Government or any agency thereof, or Battelle Memorial Institute. The views and opinions of authors expressed herein do not necessarily state or reflect those of the United States Government or any agency thereof.

PACIFIC NORTHWEST NATIONAL LABORATORY
operated by
BATTELLE
for the
UNITED STATES DEPARTMENT OF ENERGY
under Contract DE-AC06-76RLO 1830

Printed in the United States of America

Available to DOE and DOE contractors from the Office of Scientific and Technical Information, P.O. Box 62, Oak Ridge, TN 37831; prices available from (615) 576-8401.

Available to the public from the National Technical Information Service, U.S. Department of Commerce, 5285 Port Royal Rd., Springfield, VA 22161

This document was printed on recycled paper.
(9/97)

DISCLAIMER

Portions of this document may be illegible in electronic image products. Images are produced from the best available original document.

Environmental Management Services

FACILITY EFFLUENT MONITORING PLAN FOR THE 3720 BUILDING

Prepared by:

K.D. Shields
Effluent Management

M.Y. Ballinger
Effluent Management

Approved for Use and Application by:

G.A. Simiele, Manager
Effluent Management

A.K. Ikenberry, Manager
Environmental Management Services Department

for H.L. Debban, Manager
Facilities Operations Department

Pacific Northwest National Laboratory
Operated by Battelle for the
U. S. Department of Energy

Summary

This Facility Effluent Monitoring Plan (FEMP) has been prepared for the Environmental Science Laboratory (3720 Facility) at the Pacific Northwest National Laboratory (PNNL) to meet the requirements in DOE Order 5400.1, "General Environmental Protection Programs" This FEMP has been prepared for the 3720 Facility primarily because it has a "major" (potential to emit > 0.1 mrem/yr) emission point for radionuclide air emissions according to the annual National Emission Standards for Hazardous Air Pollutants (NESHAP) assessment performed. This section summarizes the airborne and liquid effluents and the inventory based NESHAP assessment for the facility. The complete monitoring plan includes characterization of effluent streams, monitoring/sampling design criteria, a description of the monitoring systems and sample analysis, and quality assurance requirements.

The 3720 Facility provides office and laboratory space for PNNL scientific and engineering staff conducting multidisciplinary research in the areas of materials characterization and testing and waste management. The facility is designed to accommodate the use of radioactive and hazardous materials to conduct these activities. Radioactive material storage and usage occur throughout the facility and include a large number of isotopes. This material is in several forms, including solid, liquid, and dispersible particulate. The facility is in the process of being vacated for shutdown, but is considered a Major Emission Point as of the date of this document approval.

Airborne Effluents

Potential radioactive airborne emissions in the 3720 Facility have been assessed and all potential airborne release pathways identified. One of the three release points on the 3720 Facility, the Main Stack (EP-3720-01-S) is characterized as a Major Emission Point. The other stacks are characterized as Minor Emission Points. The Main Stack sampling system was designed in accordance with 40 CFR 61. All three facility stacks are currently registered with the Washington State Department of Health as required by WAC 246-247 *Radiation Protection – Air Emissions*. Chemical inventories were reviewed and determined to be well below the threshold requiring emissions monitoring or development of a risk management plan in accordance with 40 CFR 68.

Liquid Effluents

Liquid effluent release pathways in the 3720 Facility are either administratively or physically controlled. Floor drain connections to the process sewer that have the potential for inadvertent release of chemicals or radioactive material have been plugged. The remaining drains have been posted with labels stating the type of drain and liquid effluent disposal controls. These are primarily laboratory sink and hood drains.

The 3720 Facility has two sewer systems: the process sewer (PS) and the sanitary sewer (SNS). All process drains are connected to the PS with the exception of four previously identified lab sinks and drains which are connected to the SNS. PS effluent lines from the facility enter into the 300 Area liquid effluent system operated by Waste Management Hanford Company (WMHC). The PS is monitored by WMHC prior to discharge to the Columbia River via the 300 Area Treated Effluent Disposal Facility (TEDF). DynCorp monitors the SNS, as required, prior to discharge to the City of Richland Publicly Owned Treatment Works (POTW).

NESHAP Determination

An inventory-based method was used to estimate the maximum offsite dose from potential airborne releases in accordance with 40 CFR 61, Subpart H. The potential unmitigated dose exceeded 0.1 mrem/yr. A number of chemicals in the building in greater than Reportable Quantity were identified. This meets both DOE-RL criteria for preparing a FEMP

This page intentionally left blank.

Contents

Summary i

List of Figures v

List of Tables v

Acronyms vii

1.0 Introduction **1.1**
- 1.1 Purpose 1.1
- 1.2 Scope 1.1
- 1.3 Basis for Preparing FEMP 1.1
- 1.4 References 1.2

2.0 Facility Description **2.1**
- 2.1 Physical Description 2.1
- 2.2 Process Description 2.4
- 2.3 Source Term Definition and Description 2.4
  - 2.3.1 Chemical 2.5
  - 2.3.2 Radionuclide 2.6
- 2.4 Identification of Effluent Pathways 2.7
  - 2.4.1 Gaseous and Aerosol Emission Pathways 2.7
  - 2.4.2 Liquid-Effluent Pathways 2.11
- 2.5 References 2.12

3.0 Rationale and Design Criteria for Monitoring **3.1**
- 3.1 Basis for Design Criteria 3.1
- 3.2 Criteria for Radionuclide Emission Sampling 3.2
  - 3.2.1 Sampling System Performance 3.2
  - 3.2.2 Sampling System Design Criteria 3.3
  - 3.2.3 Sampling System Operation 3.3
- 3.3 Historical Monitoring/Sampling Data for Effluent Streams 3.4
  - 3.3.1 Normal Conditions 3.4
  - 3.3.2 Upset Conditions 3.8
- 3.4 Radionuclide Air Sampling/Monitoring System Description 3.10
- 3.5 Radionuclide Air Sampling and Monitoring System Performance 3.15
  - 3.5.1 Stack Radionuclide Sampling System Performance 3.15
- 3.6 Handling of Radionuclide Air Sampling and Monitoring Data 3.16
- 3.7 Calibration and Maintenance of Radionuclide Air Sampling & Monitoring Equipment 3.16
- 3.8 Alternative Sampling Methods for Radionuclide Air Emissions 3.16
- 3.9 Liquid Effluent Sampling and Monitoring 3.17
- 3.10 References. 3.18

4.0 Laboratory Analyses **4.1**
- 4.1 Analytical Procedures 4.1
  - 4.1.1 Determination of Alpha and Beta Activity on Particulate Air Filter 4.1
  - 4.1.2 Isotopic Analysis 4.1
- 4.2 Procedures 4.2
- 4.3 References 4.3

5.0 Quality Assurance Requirements **5.1**
- 5.1 Quality Assurance Plan 5.1
- 5.2 Internal and External Plan Review 5.1

5.3 References 5.1

6.0 Program Implementation Procedures 6.1
6.1 Interface with the Near-facility Environmental Monitoring Program 6.1
6.2 Interface with the Operational Environmental Surveillance Program 6.1
6.3 References 6.1

7.0 Reporting 7.1
7.1 Routine Effluent Monitoring Reports 7.1
7.2 Non-Routine Notifications and Reports 7.1
7.3 Event Notification and Reporting 7.2
7.4 References 7.2

Appendix A - Projection of Offsite Emission Dose

Appendix B - Nonradioactive Hazardous Materials Characterization

Appendix C – Supporting Calculations

Appendix D - Ventilation System Flow Pathways

Figures

2.1 Photo of the 3720 Facility 2.2
2.2 Geographical Location of the 3720 Facility 2.3
2.3 3720 Basic Floor Plan and Systems 2.4
2.4 Schematic of the Ventilation System for the Main 3720 Facility 2.9
2.5 Schematic of the Ventilation System for the Northern Annex to the 3720 Facility 2.9
2.6 Diagram of the 300 Area Process Sewer 2.12
3.1 Schematic Diagram of Typical Stack Sampling System 3.11
3.2 ESP-3720-01-S - 3720 Facility Main Stack 3.12
3.3 3720 Facility Main Stack Sampling Probe 3.12
3.4 ESP-3720-02-S - Annex Stack 3.13
3.5 ESP-3720-03-S - Southeast Stack 3.14
3.6 Schematic of Liquid Effluent Sampling and Monitoring System for 3720 ..... 3.18

Tables

2.1 3720 Facility Ventilation Exhaust Points 2.8
3.1 3720 Facility Stack Sampling Data 1988-1993 (Ci) 3.5
3.2 3720 Main Stack Annual Release Quantities 3.6
3.3 Annual Releases from Other 3720 Emission Points (Ci) 3.6
3.4 Average Results from PS Characterization for 3720 1994-1995 ..... 3.8
3.5 Unusual Occurrences in the 3720 Facility 1980-1997 ..... 3.9
3.6 Sampling System Efficiencies for 1-μm Aerosol 3.11
3.7 Detection of Significant Radionuclides in 3720 Stack Emissions 3.16
4.1 Detectable Concentrations for Emissions from 3720 Facility Stacks (μCi/cm3) 4.1
4.2 Isotopic Separation and Analysis Methods 4.2

This page intentionally left blank.

ACRONYMS

ACV – Administrative Control Values
AHU – Air Handling Unit
AMAD - Activity Median Aerodynamic Diameter
ANSI – American National Standards Institute

BCAA – Benton Clean Air Authority
CAM – Continuous Air Monitor
CFR – Code of Federal Regulations
CMS – Chemical Management System

DOE – Department of Energy
DOE-RL – Department of Energy Richland Operations Office
EM – Effluent Management
EMP – Environmental Monitoring Plan
EPA – Environmental Protection Agency

FEMP – Facility Effluent Monitoring Plan
HEPA – High Efficiency Particulate Air

MDA – Minimum Detectable Activity
NESHAP – National Emission Standards for Hazardous Air Pollutants
NOC – Notice of Construction

OED - Offsite Emission Dose
ONE – Off-Normal Event
ONO – Off-Normal Occurrence

PNNL – Pacific Northwest National Laboratory
POTW – Publicly Owned Treatment Works
PS – Process Sewer
PTE – Potential-to-emit

QA – Quality Assurance
QC – Quality Control

RAT – Radioanalytical Application Team
RCRA – Resource Conservation and Recovery Act
RE – Reportable Event
RPL – Radiochemical Processing Laboratory
RQ – Reportable Quantity

SBMS – Standards Based Management System
SF – Supply Fan
SNS – Sanitary Sewer
SOP – Standard Operating Procedure
SOW – Statement of Work

TEDF – Treated Effluent Disposal Facility
UO – Unusual Occurrence
WAC – Washington Administrative Code
WDOE – Washington State Department of Ecology
WDOH – Washington State Department of Health
WMHC – Waste Management Hanford Company

This page intentionally left blank.

1.0 Introduction

It is the policy of the U.S. Department of Energy (DOE) and the Pacific Northwest National Laboratory (PNNL) to monitor effluents to determine if the public and the environment are adequately protected during DOE operations, and whether operations are in compliance with DOE and other applicable federal, state, and local standards and requirements. It is also DOE and DOE-contractor policy that effluent monitoring programs meet high standards of quality and credibility.

1.1 Purpose

DOE Order 5400.1, "General Environmental Protection Programs" (DOE 5400.1) states the following objective for environmental monitoring programs:

> demonstrate compliance with legal and regulatory requirements imposed by applicable Federal, State, and local agencies; confirm adherence to DOE environmental protection policies; and support environmental management decisions (Section IV-1).

Plans must be prepared for each site, facility, or process that uses "significant pollutants or hazardous materials" (DOE 1988, Section, IV-2). These requirements are being met through the environmental monitoring program conducted for the Hanford Site and described by the DOE Richland Operations Office (DOE-RL) in the Hanford Site Environmental Monitoring Plan (EMP) (DOE 1997).

The EMP identifies and discusses two major activities as specified by DOE 5400.1: a) effluent monitoring, and b) environmental surveillance. Because the Hanford Site contains a number of facilities with effluent monitoring needs, individual facility effluent monitoring plans, (Facility Effluent Monitoring Plans [FEMPs]), are prepared for those facilities to implement the effluent monitoring requirements. This report supplies information on effluent monitoring in the Environmental Science Laboratory (3720 Facility). The information provided in this FEMP is current as of the time of FEMP issuance. DOE Order 5400.1 requires the EMP to be reviewed annually and updated every 3 years. Update of this FEMP will also occur on a 3 year schedule.

1.2 Scope

Characterizing the radioactive and nonradioactive constituents in inventory and in waste streams provides the underlying rationale for sampling and monitoring programs. Currently, routine sampling and monitoring compliance efforts at the 3720 Facility are confined to radioactive air emissions. Compliance assessments of the existing radioactive air sampling equipment are included in this FEMP. Compliance sampling for liquid streams from the 3720 Facility is incorporated into 300 Area compliance sampling activities conducted by Waste Management Hanford Company (WMHC) for process waste streams and DynCorp for sanitary discharges for the 300 Area, as required.

A major activity of the FEMP effort is to identify all the liquid and air release pathways (e.g., identify all access points to the various sewers and all radioactive emission release pathways) under normal operations and during process upset conditions. These are verified on as-built drawings that are maintained in PNNL's Essential Drawings System.

The method of characterization discussed in this plan identifies potential pollutants at the point of generation and potential upset conditions that are likely to occur, and evaluates the potential for those materials to enter an effluent stream.

1.3 Basis for Preparing FEMP

A FEMP was determined to be needed for the 3720 Facility because of the quantity of radionuclides and chemicals in the building. As of the development of this document, the 3720 Facility had a potential to emit (PTE) of >0.1 mrem/yr for radionuclides and had some chemicals in excess of their Reportable Quantity (RQ) value as defined in 40 CFR 302. This meets both DOE-RL criteria for the preparation of a FEMP. A list of radioactive material in the facility can be found in Appendix A and a list of chemicals in greater than the RQ is provided in Appendix B.

1.4 References

DOE 1988. *General Environmental Protection Program*, DOE 5400.1. U.S. Department of Energy Order. U.S. Department of Energy, Washington, D.C., DOE 1997. *Environmental Monitoring Plan,* DOE/RL-91-50, Rev 2, United States Department of Energy, Richland Operations Office, Richland, Washington.

2.0 Facility Description

The Environmental Science Laboratory (3720 Facility) provides office and laboratory space for PNNL scientific and engineering staff conducting multidisciplinary research in the areas of materials characterization and testing and waste management. The facility is designed to accommodate the use of radioactive and hazardous materials to conduct these activities. As of the preparation of this document, the facility is being vacated and facility shutdown is progressing. However, the facility still has a major emission point as of document approval and thus the update of this FEMP is required.

2.1 Physical Description

The 3720 Facility (Figure 2.1) was built in 1959 and is located in the northernmost region of the 300 Area, bounded on the north by the 300 Area fence. The facility is adjacent to the 333 Building on the east, the 3712 Building on the south, and the 313 Building on the west. The geographical location of the 3720 Building in the 300 Area is shown in Figure 2.2.

The facility (29,000 ft^2) is an all-metal frame construction erected on concrete foundations, footings, and floor slab. The building includes 34 offices (4,300 ft^2), 30 laboratories (13,000 ft^2), 1,000 ft^2 of storage space, and 11,000 ft^2 of common space. The facility also contains a 24-ft x 109-ft basement area at the southwest corner. The area above the basement (approximately 3,000 ft^2) has a limited capacity for heavy floor loading. The roof is of the medium-sloped gable type with insulated, built-up roofing, tar, and gravel placed on a corrugated sheet metal base.

A one-story concrete block annex (48 ft 2 in. x 40 ft 2 in.) was added to the north end of the building in 1980, with provisions made within the structural design to allow a second floor to be added at some future time. This addition is, essentially, independent of the rest of the building, except for electrical service and air conditioning supply. The annex has its own ventilation exhaust system. The basic floor plan of the facility, along with relevant functional systems and regions, is depicted in Figure 2.3.

The facility is completely air conditioned and fully protected from fire by a wet-pipe sprinkler system. Air conditioning units are located on the southeast side and the north end of the facility. Air conditioning chillers are located in the facility basement (Room 20). Building emergencies are covered by systems that consist of fire, evacuation, and crash alarms. The facility is conveniently divided into three ventilation regions. The main laboratory building is divided into a north and a south region, each served by an exhaust stack. The third region, the annex labs, also has an exhaust stack. The main electrical service to the facility is supplied by a 750-kVA transformer located exterior to the building. Emergency power is provided for lights and alarms (battery power) and two of the exhaust stacks. Emergency power to the exhaust fans is provided from a diesel generator located in the 300 Area. Other standard safety features incorporated into the facility include fire extinguishers, safety showers, eye wash units, spill control kits, and gloveboxes.

Radiation is monitored by using hand and foot counters, radiation area monitors, continuous air monitors (CAMs), and portable instrumentation. Approximately 10% of the building is estimated to be controlled as a radiological area. Stack effluent sampling consists of collecting a biweekly filter from the main stack and quarterly confirmatory filters from the other stacks[1] and analyzing for alpha and beta radioactivity. Liquid-waste systems consist of sanitary and process sewers.

(1) The Annex stack exhaust system has been out of service since mid 1996 and no samples have been collected since that time.

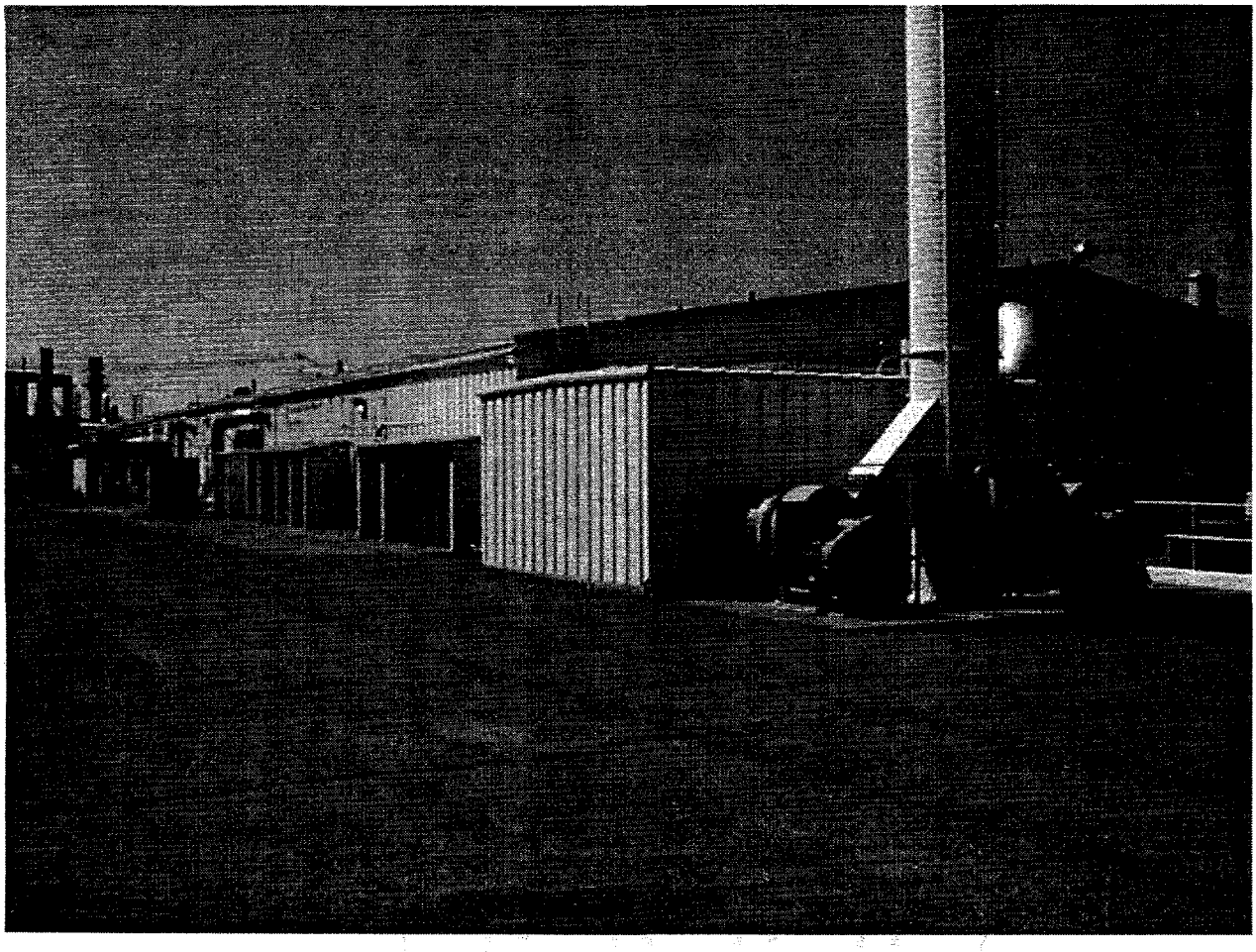

Figure 2.1 Photo of the 3720 Facility

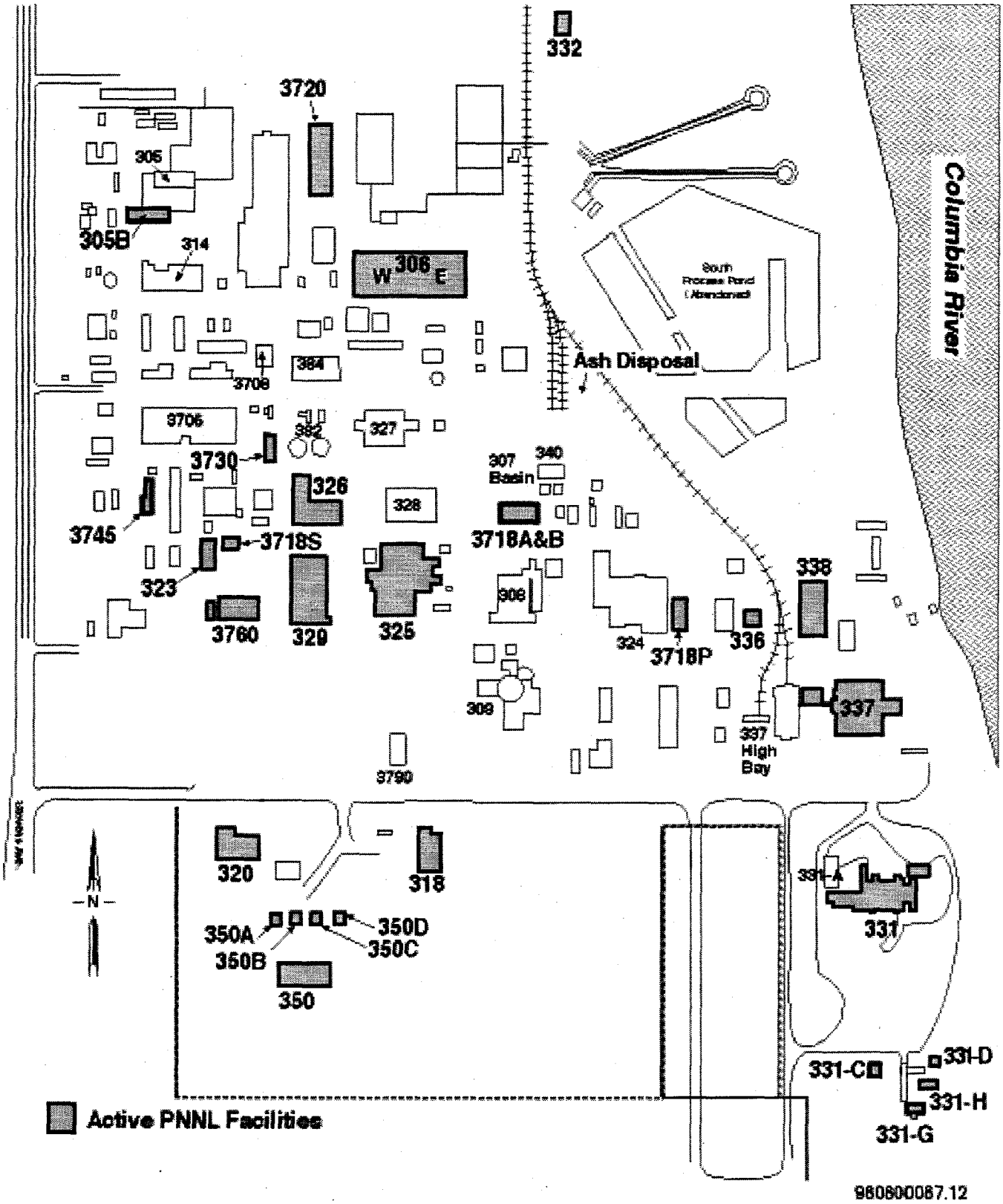

Figure 2.2 Geographical Location of the 3720 Facility

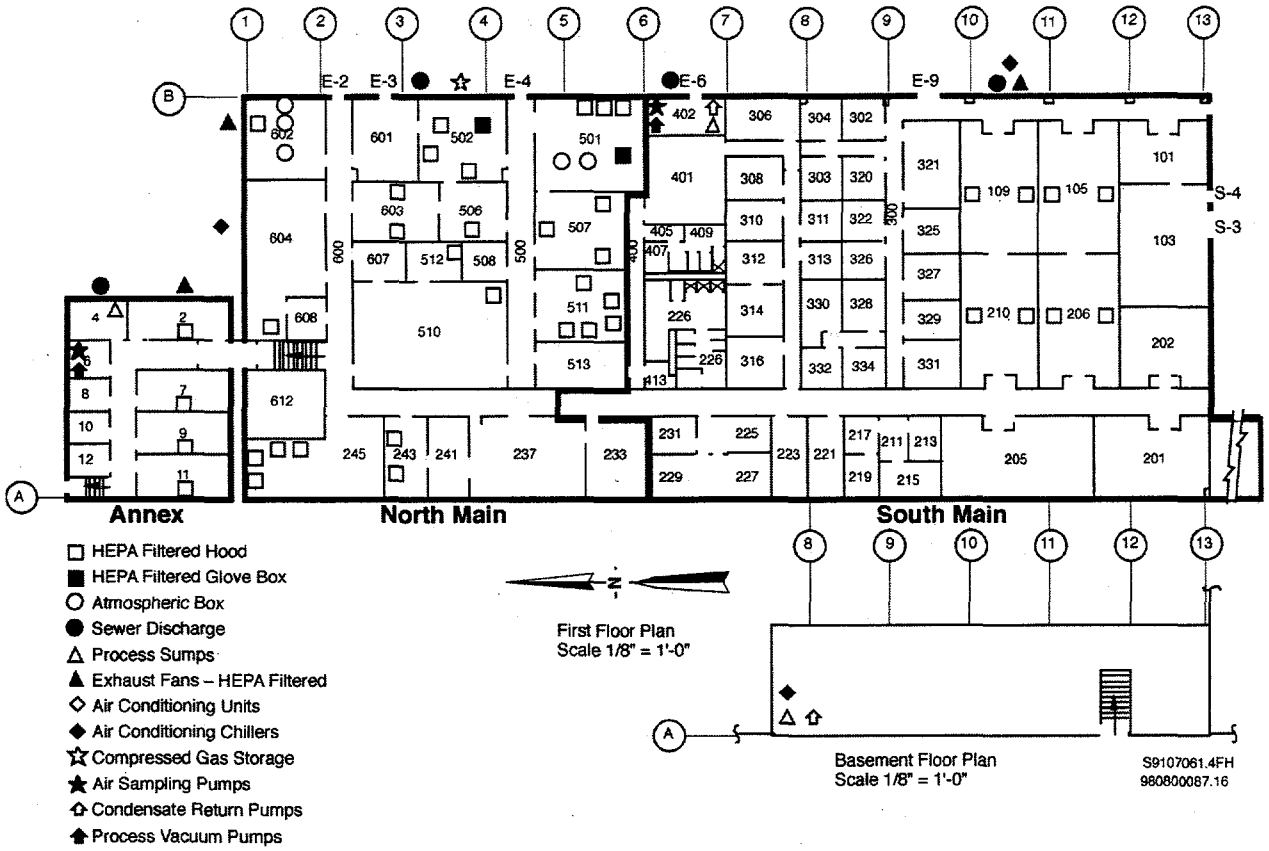

Figure 2.3 3720 Facility Basic Floor Plan and Systems

2.2 Process Description

The primary facility processes that generate solid, liquid, and gaseous effluents are associated with conducting basic and applied research for supporting sponsors. Research performed by staff located in this facility includes

- delineating the fundamental processes and mechanisms that influence the behavior of metals and radionuclides of environmental concern in the subsurface environment
- evaluating waste form stability and the ability of various materials (e.g., grout, glasses, cements) to immobilize contaminants of concern
- preparing and testing/analyzing materials/samples.

Processes associated with facility operation were also examined as potential contaminant releases. Processes within the 3720 Facility that could potentially result in such discharges include 1) stored chemicals or radionuclides and their usage, 2) experimental material usage, 3) waste accumulation and storage, 4) programmatic sample storage, 5) research implementation (e.g., use of glove and atmospheric boxes), and 6) facility operation. In the facility operation area, process evaluation was targeted at the air conditioning system, HEPA filter system, compressed gas storage, and pump systems for condensate return, vacuum, and air sampling.

2.3 Source Term Definition and Description

For the purposes of this section, a source term is a description of the nature and location of potential releases of radioactive and/or chemical materials within a building to the atmosphere or the process sewers due to process activities.

2.3.1 Chemical

Chemical storage and usage are well dispersed throughout the facility and consist of bulk materials (solvents, acids/bases), specimen materials used in materials characterization (e.g., beryllium alloys), substrate materials used to conduct laboratory experiments (e.g., chelating agents, nitrate, chromium and arsenic salts, inorganic oxides), and standards used for instrument calibration. Chemicals are tracked using the Chemical Management System (CMS) (SBMS, *Chemical Management System*). The amount of chemicals in the facility are used to determine the level of chemical hazard in the building. The needs for monitoring airborne emissions of hazardous chemicals are established in the Hanford Site Air Operating Permit (to be issued in 1999; WDOE and WDOH 1999). Based on the current potential to emit, the permit does not require monitoring. Needs for future monitoring will be established by future permits issued pursuant to the applicable state and federal regulations (e.g. WAC 173-400 General Regulations for Air Pollution Sources and WAC 173-460 Controls for New Sources of Toxic Air Pollutants. There are two primary classifications for chemical inventory in the facility, those chemicals used for research and those supporting facility operations.

Research Chemicals

A number of environmental or fabricated materials (e.g., grouts, coal, asphalts) are used to conduct leaching experiments or materials-testing activities. Lab 101 is currently used for temporarily storing groundwater samples collected from the approximately 700 active wells located on the Hanford Site that support the site's Resource Conservation and Recovery Act (RCRA) program. Radiation protection monitors screen these samples for radioactivity before storage. Many of the labs contain satellite accumulation areas for liquid and solid hazardous wastes. In most cases, liquid wastes are accumulated in carboys, and an active inventory of carboy contents is maintained. Liquid and solid wastes are disposed of according to guidelines described in PNL-MA-8 and in the Standards-Based Management System (SBMS) Subject Areas, *Managing Nonradioactive Chemical Waste*, *Managing Liquid Effluents,* and *Working With Chemicals*.

Operations Chemicals

Figure 2.3 describes the nature and location of facility systems. Processes examined included air conditioning; compressed gas storage; pump systems for condensate return, vacuum and air sampling; and process sumps. Processes associated with facility operations do not appear to be major contributors to contaminant point sources. They are described here for completeness.

Air conditioning units are located on the north end and east side of the facility. Air conditioning chillers (#1 and #3) are located in the basement mechanical room. These systems are checked yearly as part of spring maintenance, which includes the recycling and recharging of refrigerant (freon). Freon is obtained from the 331 Building, when needed, and is not kept in storage at the 3720 Facility.

Compressed gases are stored on the northeast side of the facility and consist of common benign (from a chemical standpoint) laboratory gases. Gases are also plumbed into the facility at this location providing in-house sources.

A number of pumps are located in the facility and are used to sample air, provide house vacuum, and pump fluid (steam condensate return). Air sampling and process vacuum pumps are located in Room 6 and the east equipment room (Room 402). Condensate return pumps are located in Room 402 and the basement equipment room (Room 20). All the pumps are on a maintenance program that includes routine oil changes. Oils used in the maintenance program are nonregulated (oils are analyzed for regulated constituents before disposal).

Additionally, some chemicals in particulate form (e.g., beryllium) may be trapped on HEPA filters. In such cases, the HEPA filtering system may serve as a secondary source term. This inventory is probably very small and is essentially fixed in place and irrelevant for monitoring purposes, so it is not further considered in this document.

40 CFR 68 Accidental Release Prevention Requirements: Risk Management Programs requires facilities to do risk management planning to help prevent, detect, and respond to accidental releases to air of hazardous chemicals. Chemical inventories were reviewed and determined to be well below the quantities requiring a risk management plan.

2.3.2 Radionuclide

A wide selection of radionuclides can be found in the 3720 Facility. The radionuclides in the building are found in liquid or solid form, may or may not be heated, and may be used in gloveboxes, atmospheric boxes, or fume hoods.

Source terms involving radionuclides are, for the most part (Lab 202 is the exception), contained within the north portion of the main region of the facility (Labs 245, 501, 507, 506, 603) and involve using tracer quantities of radionuclides or environmental samples containing low levels of radionuclides in experimental studies. Glove and atmospheric boxes are selectively used to conduct experiments involving radioactive materials, as well as for storing radioactive materials with limited stability. Fume hoods may be used in a similar fashion. The facility contains a Materials Balance Area (MBA) in Lab 501 for storage of Special Nuclear Materials [SNM] (isotopes of americium, neptunium, plutonium, and uranium) and a laboratory for specialized counting of radioactive samples (Lab 202). Radioactive liquid and solid wastes are accumulated in satellite storage areas, and active inventories are maintained. Wastes are disposed of as radioactive or mixed waste according to PNL-MA-8 guidelines.

Aside from nuclides that are in process, or potentially so, the building also contains materials stored for future use and wastes. Finally, an indeterminate but probably very small inventory of assorted radionuclides is believed to be present as "holdup" in HEPA filters and plated deposits in ventilation ducts and liquid pipes. This holdup inventory is believed to be fixed in place and not important for monitoring purposes, so it is not further considered in this document.

Appendix A provides a detailed inventory of radioactive material found in the 3720 Facility. This inventory includes the quantity, form, location, and other information relating to the radionuclides in the building associated with conducting research activities in the facility that could contribute to releasing pollutants to the process sewers or the atmosphere. This inventory list is a combination of three material sources:

- Part 1 - Inventory Estimates provided by 3720 staff, which is any radionuclide material that is not included in the Part 2 or Part 3 inventories
- Part 2 - Composite Radioactive Material Inventory, which is the sealed sources that are assigned to custodians and accounted for by PNNL Health and Safety Department.
- Part 3 - Nuclear Materials Inventory, which is the inventory of Special Nuclear Material that is maintained in an Material Balance Area and assigned to a Material Balance Area custodian.

The listing in Appendix A is for inventory in the building prior to research staff moves. As of the update of this FEMP, the building is being vacated and radioactive and chemical inventories are being moved out.

2.4 Identification of Effluent Pathways

The 3720 Facility produces both liquid and gaseous effluent streams, all of which are generated in the building, rather than being pass-throughs from other facilities. The effluent streams during normal and shutdown operations include two sewers and three ventilation stacks.

2.4.1 Gaseous and Aerosol Emission Pathways

Figures 2.4 and 2.5 provide schematics of the 3720 Facility exhaust system. Greater detail can be found in the drawings in Appendix D. These drawings were prepared and field verified in the summer of 1991 and reverified in 1994 and 1998. They have been identified as "essential drawings." As such they are updated whenever a building modification affects the systems shown on the drawings. Any facility modification that changes building flow paths 1) must receive prior concurrence of the building manager and 2) requires updating of the appropriate drawing(s) before project close-out (SBMS, *Creating or Modifying Engineering Calculations, Drawings, and Specifications.*).

Air balance in the 3720 Building keeps flow moving from less to greater areas of potential contamination and from the atmosphere into the building. Conducting radiological operations in HEPA-filtered hoods, gloveboxes, atmospheric boxes, and canopies also provides some confinement. No process offgas systems exist. All potentially contaminated air flow passes through HEPA filtration before discharging to atmosphere through one of three stacks equipped with sampling systems.

Supply

Most of the air supplied to the laboratories in the main building comes from the main supply fan (SF-1) with no standby. The offices in the north part of the main building receive supply air from fans SF-2 and -3, and some labs have air recirculation units (AHU-1, -2, and -3). The offices, conference rooms, the lunch room, the change room, and restrooms in the "clean," central part of the building use partially or wholly recirculated air supplied by SF-1 and recirculated by AHU-4 and -5. In the south end of the building, SF-1 provides air directly to the offices and laboratories. The rooms in the northern annex have their own air supply fan, which uses 100% outside air.

All of the hoods, gloveboxes, and atmospheric boxes in the north part of the main building are supplied with air by the rooms containing them. By contrast, the hoods in the south part of the main building and those in the northern annex each have their own air supply fan, with no standby fan.

Exhaust

During normal operation, the exhaust systems provide the only effluent path followed by in-building releases. Figures 2.4 and 2.5 show the exhaust systems in the north, central, south, and annex parts of the 3720 Facility. The potentially contaminated areas in the building are exhausted through HEPA filters. Each of these exhaust systems has its own filters and stack. These three exhaust points are sampled for radionuclide emissions: the 3720 Facility "Main Stack" (EP-3720-01-S), the "Southeast Stack" (EP-3720-03-S), and the "Annex Stack" (EP-3720-02-S). Only the Main Stack meets criteria for continuous compliance sampling; the other two stacks are normally sampled on a quarterly confirmatory basis. However, the Annex Stack has been out of service and has not been sampled since mid-1996. Building ventilation air comprises the major portion of the building exhaust flow in each of the three stacks; thus, stack-gas specific gravity, humidity, and temperature are typical for ventilation exhaust from occupied buildings. Processes containing acids, caustics, organics, or other chemicals that could potentially affect sampling systems are limited to relatively small amounts associated with laboratory operations. Some individual rooms also have their own roof-mounted exhaust fans. Table 2.1 provides information on the three registered emission points.

Table 2.1 3720 Facility Ventilation Exhaust Points

Point Number[a]	Placement[b]	Outlet Dim.	Principal Contributing Locations[c]
EP-3720-01-S	Separate (36.1'AGL)	48-in. dia.	All contaminated areas
EP-3720-02-S	Separate (15.4'AGL)	24-in. dia.	Annex labs
EP-3720-03-S	Separate (30.4'AGL)	30-in. dia.	South lab areas

(a) The last character in the number identifies the exhaust point as a stack or vent. A stack is defined as a vertical structure extending at least 2.5-equivalent diameters beyond a flow disturbance. All other exhaust points are classified as vent.

(b) Placement refers to how the exhaust structure is placed on the building. A structure penetrates the roof, a wall, or is separate from the main building. If the outlet is significantly above the building roof, the height above ground level (AGL) is given.

(c) Detailed information on locations exhausted is provided on ventilation flow diagrams in Appendix D.

In the northern part of the main building, the two stages of HEPA filtration are located in a filter addition and are downstream of a final exhaust plenum that goes to the 3720 Facility Main Stack (EP-3720-01-S). The Main Stack is a 11.0-m-high by 1.2-m-diameter stainless steel cylinder located on the north side of the building. Two parallel exhaust lines and fans supply the stack. The air sampling vacuum pump and a few work stations have a third individual stage of HEPA filtration before exhausting to the northern final plenum. The relatively negative pressure in the northern part of the main building prevents flow into the clean center section of the building. The Main Stack exhausts from laboratories containing open-faced hoods and glovebox discharges. Measured stack flow rates have averaged 24,000 cfm over the past several years[1]. The main stack is continuously sampled in accordance with requirements in 40 CFR 61 Subpart H.

The clean central part of the building, the equipment room, and the process vacuum system either exhaust through fans or vent to atmosphere with no HEPA filtration. The restrooms and kitchen have fans that exhaust the rooms to atmosphere.

(1) Average of annual stack flow from 1991 - 1997 annual release reports.

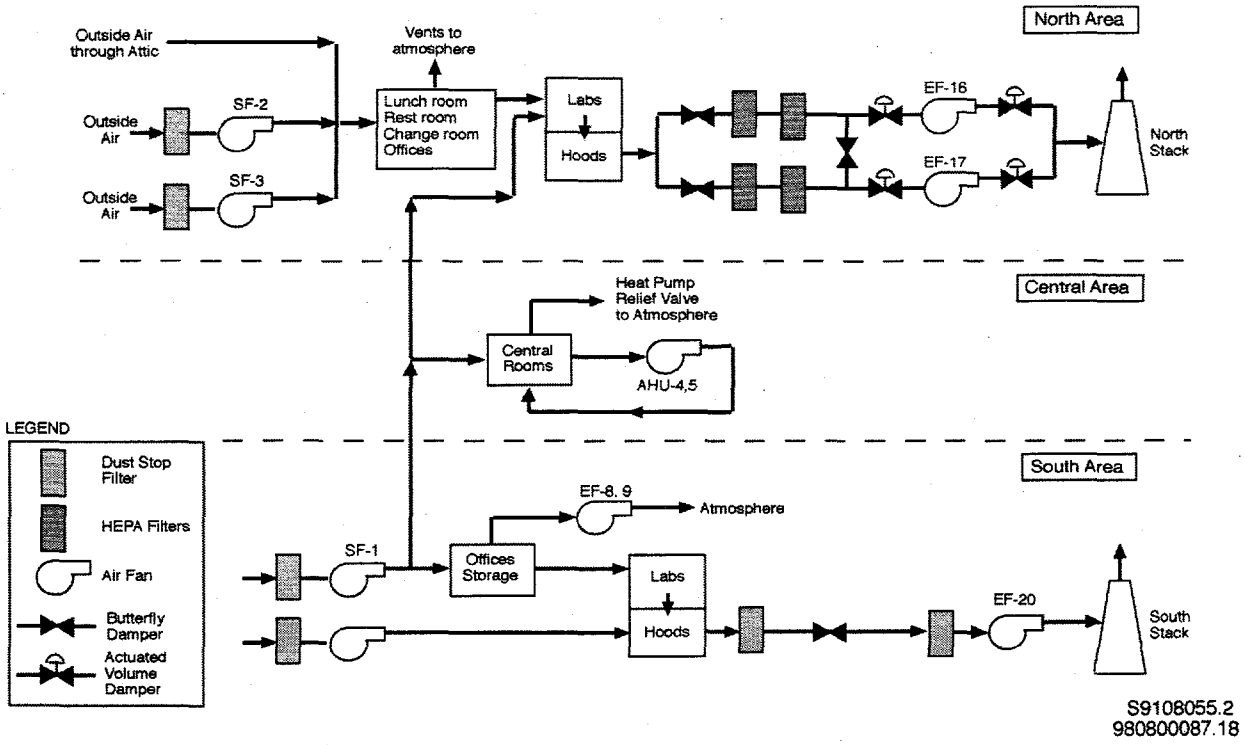

Figure 2.4 Schematic of the Ventilation System for the Main 3720 Facility

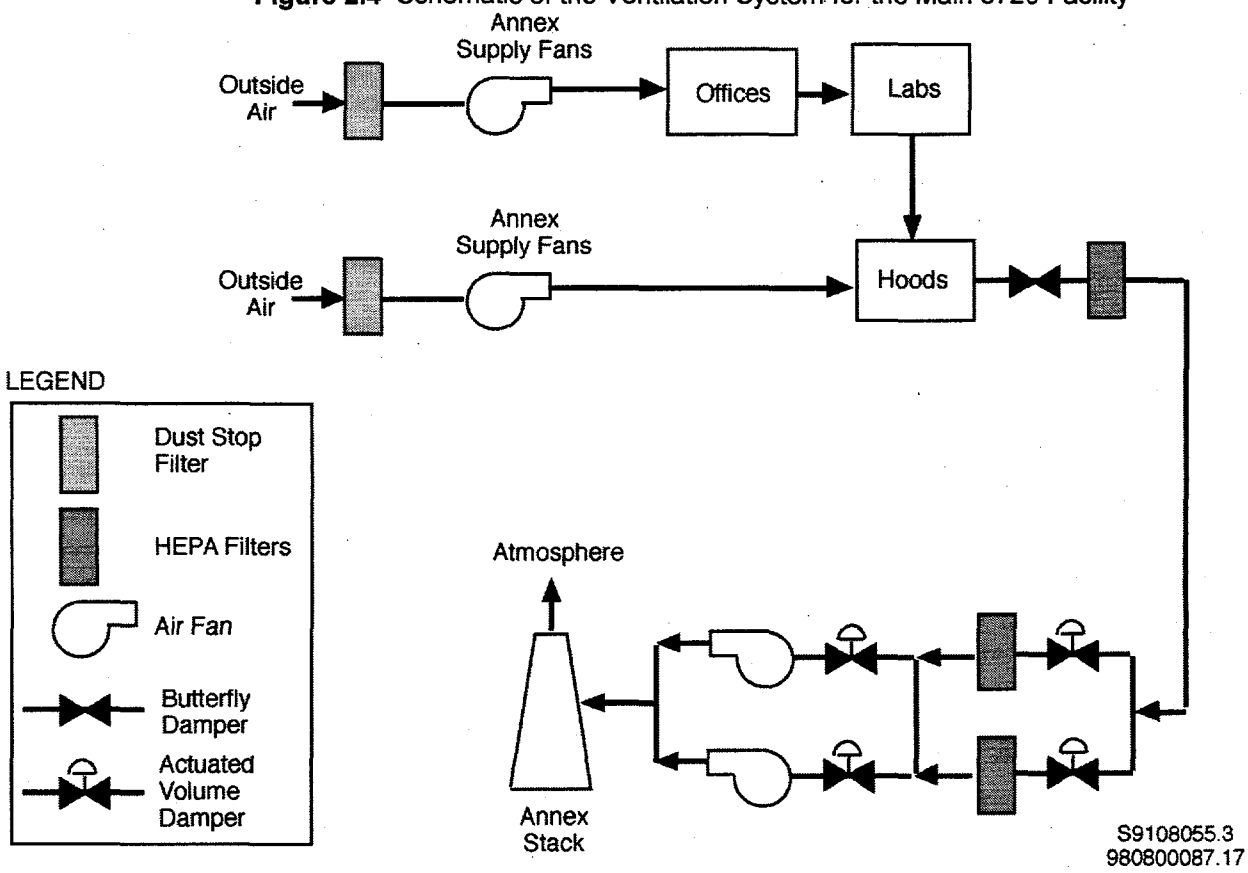

Figure 2.5 Schematic of the Ventilation System for the Northern Annex to the 3720 Facility

In the southern part of the building, rooms exhaust through single stages of HEPA filtration (one filter per room) to the southern final exhaust plenum and through the 3720 Facility Southeast Stack (EP-3720-03-S). The southern final plenum is exhausted by one fan (EF-20) with no standby and contains one more stage of HEPA filters (with no bypass). The Southeast Stack is a 9.3-m-high by 0.76-m-diameter steel cylindrical stack located on the east side of the building. Measured stack flow rates have averaged 6,000 cfm over the past several years[1]. Building ventilation systems effectively isolate the south portion of the building from the main and annex laboratory areas. The stack is sampled for a 2-week period on a quarterly basis to provide "confirmatory" measurements of emissions in accordance with requirements in 40 CFR 61 Subpart H regulations. Two rooms exhaust directly to atmosphere through roof fans, with no HEPA filtration.

The laboratories in the northern annex have one stage of HEPA filtration each. The annex exhaust then goes to a common final exhaust plenum with two lines, each containing a fan and single stage of HEPA filters, for a total of two stages of HEPA filtration before release from the facility via the 3720 Facility Annex Stack (EP-3720-02-S). The Annex Stack is a 15.4-ft-high by 24-in.-diameter steel cylindrical stack located on the north side of the 3720 Facility, adjacent to the annex laboratory addition. Measured stack flow rates have averaged 2,900 cfm over the past several years[2]. Building ventilation systems effectively isolate the annex addition from the remainder of the building. The annex system has been out of service and has not been sampled since 1996. Before that, the stack was sampled for a 2-week period on a quarterly basis to provide "confirmatory" measurements of emissions in accordance with requirements in 40 CFR 61 Subpart H regulations.

Emergency electrical power is supplied to one of the exhaust fans for the north end of the main building (EF-16 or -17) to maintain minimum flow through hoods. The other fans in the main building and annex are on normal power. Failure of either of the north main building exhaust fans (EF-16 and -17) is detected by flow sensors and causes shut down of all the main building (but not annex) supply fans. Exhaust fan EF-20, in the south part of the building, and the recirculation fans in the central part of the building are not shut down. This interlock is intended to prevent pressurization of the north part of the main building. No interlock is believed to exist to shut down the building fans in the event of a failure of the southern exhaust fan, EF-20.

Vents

Most of the air vents in the 3720 Facility can be considered to be part of the ventilation exhaust system, and as such have already been discussed. The remaining vents are not part of ventilation. These include the equipment room vent, the attic air intakes, the sewer system vents, and other pathways that can be produced by potential air balance problems.

The equipment room vents directly to atmosphere and contains the building vacuum pumps and other equipment. The attic air intakes provide part of the airflow into the northern part of the main building and have backdraft dampers.

The process and sanitary sewer systems vent to atmosphere. The sewer vents are unfiltered, but sealed off from building atmosphere by liquid loop seals. An upset might cause a release to room air, a small part of which could then be entrained into the process sewer (PS) by concurrent liquid flow into the drain. In addition, small amounts of aerosol might be resuspended or vapor evaporated from the liquid contents of a PS line contaminated by an upset. However, these hypothetical drain paths are regarded as being implausible pathways for any significant release of regulated material.

Normal building leak paths may also act as vents. At average wind speeds, the normal air balance and pressure gradient ensure that all flow goes out the final exhaust plenum and stack, even if doors or the truck lock or smaller leak paths are open. The pressure of the northern part of the main building is the most negative; it is maintained at about 0.05 in. water negative (or 13 Pa negative) with respect to the atmospheric pressure measured on the roof. This same range of lower-than-roof pressure may be found on the sides of a flat-roofed building at wind speeds of 15 mph or greater. Thus, flow might leave the building through normal leak paths on the sides of the building that are parallel to a high wind. Such hypothetical situations may occur during normal operations, but could only produce

(1) Average of annual stack flow from 1991 - 1997 annual release reports.
(2) Average of annual stack flow from 1991 - 1997 annual release reports.

releases if an upset source term had escaped its local containment (e.g., glove box). Only a small part of the air flow in the building could escape in this manner.

2.4.2 Liquid-Effluent Pathways

Two liquid-waste systems serve the 3720 Facility: the sanitary sewer (SNS) and PS systems. The following sections describe the liquid-effluent paths in the 3720 Facility. All liquid-effluent release pathways in the 3720 Facility are either administratively or physically controlled.

Sanitary Sewer

The SNS primarily serves only the lunchroom, water fountains, toilets, and other water uses in which no radioactive contamination is believed to be possible. There are, however, four process connections tied to the SNS. These connections were identified in DOE/RL-95-28. These connections result from the conversion of space originally used as equipment/machine shops into laboratory space and are now laboratory sink drains in Rooms 101, 201, and 205, as well as a funnel drain in Room 201. Currently, the 3720 Facility is being prepared for transition to the site facility stabilization contractor Babcox and Wilcox. Because of the extremely short anticipated life of the facility, no plans are currently in place to reroute those connections. They are currently vacant and remain under strict administrative control. Under normal operating conditions, no regulated materials are present in the SNS effluent. No cross connections exist between the SNS and the PS.

Process Sewer

Most process streams from the 3720 Building discharge to the PS, Figure 2.6, operated by WMHC. PS discharge points have been identified and dye tests performed to verify some access points. Floor drain connections to the process sewer in laboratory areas have been plugged. The remaining drains have been posted with labels stating the type of drain and liquid-effluent disposal controls. These are primarily laboratory sink and hood drains. Selective floor drains in facility service tunnels that must remain open in case of main service line leaks or ruptures are also posted.

The PS drains the laboratory sinks; heating, ventilation, and air conditioning (HVAC) cooling water; vacuum pump cooling water; and the equipment rooms. Under normal conditions, the PS lines do not contain regulated materials.

Effluents from most facility sinks empty into process sumps located in Rooms 6, 402, and 20 and are released from the facility at three discharge sewer locations into the main PS line located parallel to the east side of the building. Process Sewer effluent characterization sampling was performed in 1994 and 1995. The results are summarized in Riley et al. (1994).

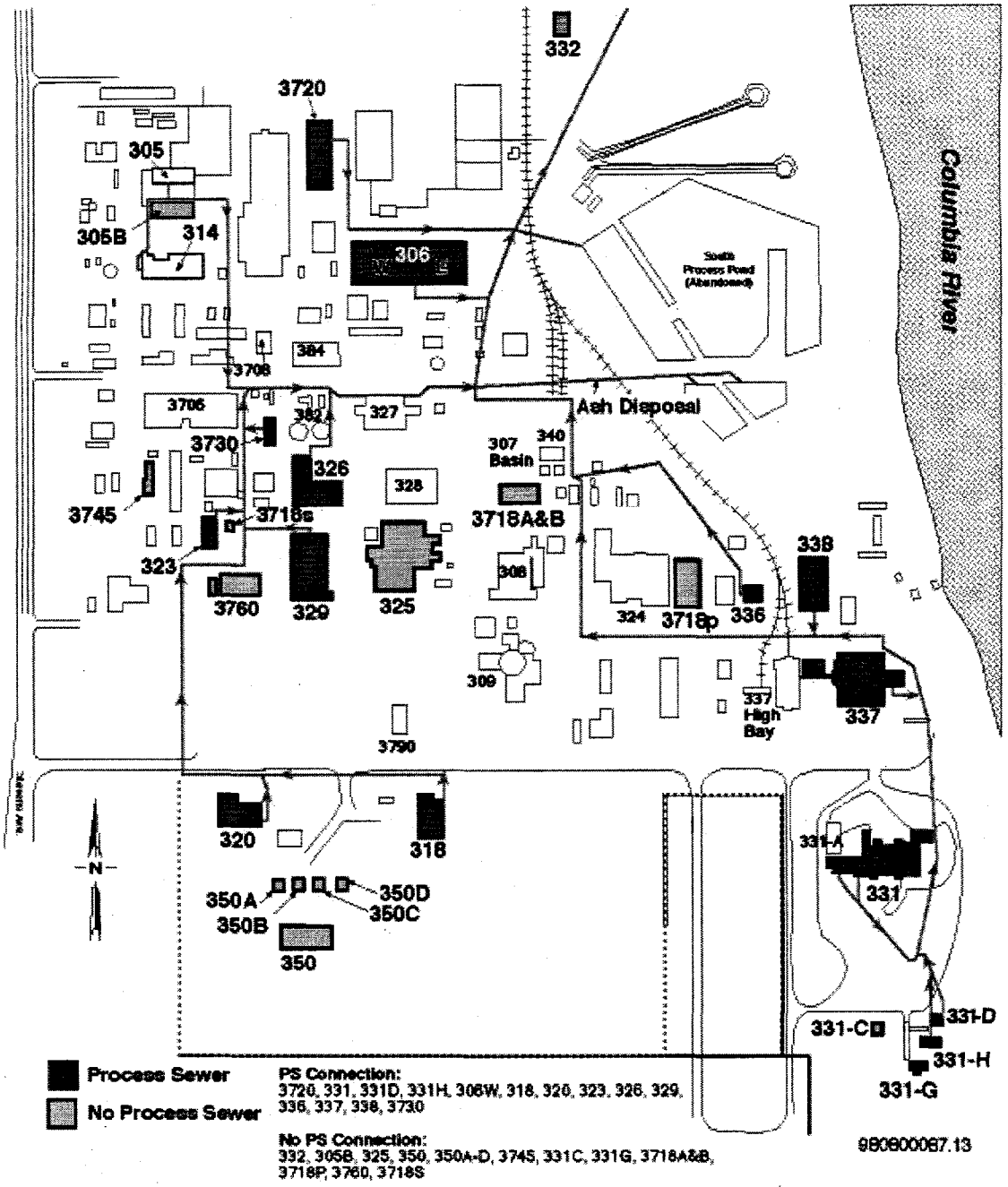

Figure 2.6 Diagram of the 300 Area Process Sewer

2.5 References

40 CFR 61. 1990. Subpart H--National Emission Standards for Emissions of Radionuclides Other Than Radon from Department of Energy Facilities. 7-1-90 Edition. U.S. Environmental Protection Agency, Washington, D.C.

Riley, R. G., M. Y. Ballinger, E. G. Damberg, S. C. Evans, A. S. Ikenberry, K. B. Olsen, R. M. Ozanich, C. J. Thompson, and K. L. Manke. 1994. *Characterization and Monitoring of 300 Area Facility Liquid Waste Streams Status Report*. PNL-10147, Pacific Northwest Laboratory, Richland, Washington.

SBMS 1997. *Working With Chemicals*. Standards-Based Management System Subject Area. Pacific Northwest National Laboratory, Richland, Washington.

SBMS 1997. *Creating or Modifying Engineering Calculations, Drawings, and Specifications.* Standards-Based Management System Subject Area. Pacific Northwest National Laboratory, Richland, Washington.

SBMS 1998. *Chemical Management System.* SBMS Subject Area. Pacific Northwest National Laboratory, Richland, Washington.

SBMS 1998. *Managing Liquid Effluents.* SBMS Subject Area. Pacific Northwest National Laboratory, Richland, Washington.

SBMS 1998. *Managing Nonradioactive Chemical Waste.* SBMS Subject Area. Pacific Northwest National Laboratory, Richland, Washington.

U.S. Department of Energy/Richland Operations Office (DOE/RL)-95-28. 1995. City of Richland 300 Area Industrial Wastewater Permit Application, Richland, Washington.

WDOE and WDOH 1999. *Hanford Site Air Operating Permit,* HNF-AOP-97-1. Washington State Department of Ecology and Washington State Department of Health.

This page intentionally left blank.

3.0 Rationale and Design Criteria for Monitoring

This section discusses design criteria for the measurement program for 3720 Facility airborne emissions and liquid effluents. Liquid effluent streams from the 3720 facility are sent to one of the 300 Area liquid effluent systems (operated by WMHC and DynCorp for DOE-RL). Thus, the 3720 Facility does not have any direct liquid discharge to the environment and this section will focus primarily on airborne emissions.

In this section, the terms "sampling" and "monitoring" are used to distinguish between two types of airborne-emissions measurement processes:

- "Sampling" refers to collecting a representative portion of the emission over a period of time, with subsequent analysis for constituents of interest. "Sampling" is an "after-the-fact" measurement.
- "Monitoring," on the other hand, is measuring radionuclide emission rates by means of a detector located in the sample stream. "Monitoring" is a "real-time" measurement.

Airborne emissions are sampled to demonstrate compliance with emission standards, to identify emission trends, and to provide evidence regarding the effectiveness of emission control systems (procedures and equipment). Emissions are monitored as a means to provide timely indication of a significant change in emission rate. Criteria are established to ensure that emissions are measured according to applicable regulations and guidance and are appropriate for existing facility operations.

Based on the current potential to emit for hazardous chemicals from the 3720 Facility no monitoring is required under the AOP (to be issued in 1999; WDOE and WDOH 1998). Therefore the discussion in this section will focus on radiological air emissions.

3.1 Basis for Design Criteria

The following regulations, DOE Orders, and guidance were considered in effluent sampling and monitoring design and operation:

Regulations on Standards of Performance for New Stationary Sources, Appendix A: Reference Methods. Environmental Protection Agency, U.S. Code of Federal Regulations, 40 CFR 60. (EPA 1971)

National Emission Standards for Hazardous Air Pollutants. Environmental Protection Agency, U.S. Code of Federal Regulations, 40 CFR 61 (EPA 1990).

Hanford Site Air Operating Permit. Washington State Department of Ecology and Washington State Department of Health. HNF-AOP-97-1 (WDOE and WDOH to be issued in 1999).

Radiation Protection - Air Emissions. Washington Department of Health. Washington Administrative Code, WAC 246-247 (WAC 1994).

General Environmental Protection Program. U.S. Department of Energy. DOE 5400.1 (DOE 1988).

Radiation Protection of the Public and the Environment. U.S. Department of Energy. DOE 5400.5 (DOE 1990).

General Design Criteria. U.S. Department of Energy. DOE 6430.1A (DOE 1987).

Environmental Regulatory Guide for Radiological Effluent Monitoring and Environmental Surveillance. U.S. Department of Energy. DOE/EH-0173T (DOE 1991).

Guide to Sampling Airborne Radioactive Materials in Nuclear Facilities. American National Standards Institute ANSI N13.1-1969 (ANSI 1969).

Specifications and Performance of Onsite Instrumentation for Continuously Monitoring Radioactivity in Effluents. American National Standards Institute ANSI N42.18 1980b (ANSI 1980).

The following additional requirements for sampling/monitoring at the 3720 Facility are prescribed in PNNL operational and programmatic documents:

Standards-Based Management System A-Manual, PNL-MA-8, Waste Management and Environmental Compliance. Pacific Northwest National Laboratory, Richland, Washington. (SBMS, PNNL MA-8)

Standards-Based Management System Subject Area, Airborne Emissions. Pacific Northwest National Laboratory, Richland, Washington. (SBMS, Airborne Emissions)

Standards-Based Management System Subject Area, Creating or Modifying Engineering Calculations, Drawings, and Specifications. Pacific Northwest National Laboratory, Richland, Washington. (SBMS, Creating or Modifying Engineering Calculations, Drawings, and Specifications)

Standards-Based Management System Subject Area, Managing Liquid Effluents. Pacific Northwest National Laboratory, Richland, Washington. (SBMS, Managing Liquid Effluents)

Standards-Based Management System Subject Area, Managing Nonradioactive Chemical Waste. Pacific Northwest National Laboratory, Richland, Washington. (SBMS, Managing Nonradioactive Chemical Waste)

Standards-Based Management System Subject Area, Working With Chemicals. Pacific Northwest National Laboratory, Richland, Washington. (SBMS, Working With Chemicals)

3.2 Criteria for Radionuclide Emission Sampling

Airborne radionuclide emission points at PNNL are classified as either "major" or "minor." These two categories are defined as follows:

- Major emission points are those where radionuclide emissions could cause an offsite emission dose (OED)[1] of 0.1 mrem/yr or greater, if emission controls were not applied. Major emission points are sampled according to requirements in Subpart H of EPA (1990). Sampling of major emission points is performed according to requirements in 40 CFR 61 Subpart H.
- Minor emission points are those that potentially could release radionuclides, but not at the levels of a "major" point.

The 3720 Facility Main Stack is considered a "major" emission point according to the criteria above and continuous sampling for radiological air emissions is required. The Southeast Stack and Annex Stack are considered "minor".

3.2.1 Sampling System Performance

Sampling at each major emission point shall be capable of detecting an annual radionuclide release quantity resulting in a total OED of 0.01 mrem/yr (DOE 1991).

All radionuclides anticipated to contribute greater than 10% of the potential to emit (PTE) emission dose from the sampled emission point shall be accounted for, either by direct analysis or by inference from an indicator measurement (EPA 1990).

---

(1) The annual OED is the maximum committed effective dose equivalent that could be expected to be received by an offsite individual from facility airborne radionuclide emissions if the facility were operated without any HEPA filtration or other emission controls. The method for calculating the OED consists of identifying the radionuclide inventory potentially available for release, multiplying this by a fractional release value, and multiplying this product times an emission dose factor calculated by the EPA Clean Air Act compliance code CAP-88 (Ballinger et al. 1995).

Biases in emission measurements, arising from the sample collection and analysis process, shall be minimized through the judicious application of design and operation practices according to American National Standards Institute (ANSI) (1969) and DOE (1991).

3.2.2 Sampling System Design Criteria

Samplers shall be located according to criteria in EPA (1971) Method 1 in Appendix A. Method 1 states that

> Sampling or velocity measurements are to be performed at a site located at least eight stack or duct diameters downstream and two diameters upstream from any flow disturbance such as a bend, expansion, or contraction in the stack, or from a visible flame.
>
> However, the method also states that,
>
> if necessary, an alternative location may be selected, at a position at least two stack or duct diameters downstream and 0.5 diameters upstream from any flow disturbance.

Representative samples shall be withdrawn on a continuous basis at the sampling site following the guidance in ANSI (1969), Appendix A, Section A3.2, which recommends a minimum of six extraction points for the 3720 Facility main stack (ESP-3720-01-S). Furthermore, ANSI (1969) recommends that each withdrawal point within a cylindrical stack be centered in an annular area of size equal to the cross-sectional area divided by the number of probes. Withdrawal points may be on a single traverse or spaced to obtain samples from the total cross section. Additional design criteria for particulate and gaseous radionuclides are specified by ANSI (1969) and DOE (1991).

3.2.3 Sampling System Operation

Sampling-system operating criteria are based on regulations and guidance documents listed in Section 3.1.

Sampling shall be performed to quantify emissions over a calendar year. Sample-collection frequency shall be based on the need for unbiased samples while maximizing sensitivity and minimizing analytical costs. The period of sample collection, thus, should be as long as possible, considering the half-life of the radionuclide, the capacity of the collection media, and the need for timely return of sampling data.

Laboratory analysis of samples shall be according to procedures required by Appendix B, Method 114 "Test Methods for Measuring Radionuclide Emissions from Stationary Sources" in EPA (1990). Analyses should be conducted by radioanalytical laboratories according to prescribed statements of work. Work statements specify analytical performance requirements, including minimum detectable activity (MDA), turnaround time, reporting requirements, quality control (QC) requirements, and sample handling.

Sampling performance criteria in Section 3.2.1 specify an emission detection level of 0.01-mrem/yr OED. The analytical MDA required to meet this criterion depends on a combination of factors, including sample size, stack flow rate, collection period, radionuclide half-life, and radionuclide-emission-dose factor. These factors shall be considered in sampling operations to ensure the required detection level is achieved.

When gross-activity measurements are used for assessing offsite dose, dose factors for the most restrictive radionuclide potentially contributing 10% or more to the annual emission dose are applied[1].

Specific analyses include those radionuclides potentially contributing 10% of the PTE for offsite dose from the building.

---

(1) Before 1993, laboratory analysis of particulate emission samples consisted of total activity (total alpha, total beta) measurements. Total activity measurements were performed because: 1) emissions were historically very low, 2) potentially significant constituents of the emission stream were known, and 3) the gross activity measurement was nondestructive; specific radionuclides in the sample could be measured if gross-activity measurements showed a potentially significant release quantity. Since 1993, airborne particulate samples from major stacks have been analyzed for several specific radionuclides in addition to the gross-activity measurements.

Exhaust-stream flow rates at sampling locations shall be measured using EPA Method 2 (EPA 1971). Flow-rate measurements should be performed on a periodic basis, as well as following modifications to the exhaust system that could be expected to cause the average exhaust rate to differ by ±10% from the previously measured rate.

Air-emission samplers should be designed to maximize the sensitivity of the sample, considering the capacity of the collection media, radioactive decay, and sample analysis costs.

Isokinetic sampling is required for major emission points where particulate emissions are expected.[1]

Under most operating conditions, isokinetic sampling can be adequately accomplished by operating the sampler so that 1) sample probes are aligned axially with the stack and point into the direction of stack flow and 2) sample nozzle inlet velocity is maintained within a factor of two of the mean-stack-exhaust velocity at the sample location.[2]

At the "major" emission points, the sampler is operated continuously, except during planned sampler maintenance or testing outages. When continuous sampling is required, the loss of sampling capability is limited to 24 h/month. If this limit is exceeded, special interim sampling is provided, or pertinent facility operations are shut down.

3.3 Historical Monitoring/Sampling Data for Effluent Streams

The 3720 Facility was built in the early 1960s for laboratory-scale research and development activities and chemical analyses. Some of the effluent streams from the facility have been sampled over the history of operations. Information from historical sampling is provided in this section to aid in providing a basis for future monitoring needs. A description of historic sampling data under normal operating conditions for air and liquid effluent streams is given in Section 3.3.1. Estimates of the types of releases and release pathways experienced during plant operations under upset conditions are given in Section 3.3.2.

3.3.1 Normal Conditions

Some of the air and liquid-effluent streams have been sampled since the 3720 Facility started operations. The types and location of sampling and methods of analysis are described in this section for normal operations. Discussion is generally limited to the past 10 years (1988 to 1997) because this period is the most relevant to future operations and monitoring needs. The discussion in this section is divided into two parts: air-effluent monitoring/sampling and liquid-effluent monitoring/sampling.

3.3.1.1 Air-Effluent Monitoring/Sampling

Over the last decade, effluent air from the 3720 Facility has been sampled for radioactive particles at several locations: the main stack (EP-3720-01-S), the annex stack (EP-3720-02-S), the southeast stack (EP-3720-03-S), and EF-12. The last location (EF-12) was a stack that served the exhaust from some gloveboxes and hoods. In 1984, this stack was removed and the exhaust routed to the main stack. The southeast stack was built around this time and started operation in 1985. None of the air-effluent release points have been monitored with stack continuous air monitors (CAMs). Except for the elimination of the EF-12 sampling system in 1984 and the addition of the southeast stack in 1985, the sampling systems currently in place (see Section 3.5) were not significantly changed until 1993 when the systems were upgraded. The upgraded systems are described in Section 3.4.

Effluent air from the 3720 Facility main exhaust has been sampled downstream of the final HEPA filters for radioactive particles. Sampling for particulate gross alpha and beta has been provided by a record sampler for the past decade. The other two stacks were also sampled continuously from 1988 to 1996. In 1996, a reduced sampling frequency was initiated for minor stacks and the sampling frequency was reduced to quarterly for 3720-02 and 3720-03. In 1996, water leak damaged a HEPA filter associated with emission point 3720-02-S (see Table 3.5).

---

(1) Emissions from the 3720 stack are filtered using HEPA filters before discharge. Unless failure of a HEPA filter system occurs (an unlikely event), particle emissions are expected to be relatively small. Based on criteria in ANSI (1969), isokinetic sampling for systems emitting particles less than 5-μm aerodynamic diameter is not necessary. DOE (1991) recommends isokinetic sampling when particles are greater than 0.5-μm aerodynamic median diameter.

(2) From Table C1 in ANSI (1969), a sampler operating at an inlet velocity of within a factor of two of the stack velocity will have a particle interception bias of 14% for a 4-μm aerodynamic equivalent diameter (AED) particulate emission.

The exhaust system was shut down and has not been restarted since. Thus, no sampling has been performed on this emission point since mid-1996.

The sampling system was upgraded in 1992 to meet the National Emission Standards for Hazardous Air Pollutants (NESHAP) (EPA 1990) requirements for continuous sampling. There was a multiple nozzle sampling array in the 3720 main stack that was used for sampling before the upgrade, but there was little information available on the actual configuration or design of the system. The new system is well documented and is described in Section 3.4. The sample collection system before the upgrades did not provide for an isokinetic sample, but the new samplers do.

In 1993, PNNL began compositing the record of particulate samples on a quarterly basis and analyzing them for a number of radionuclides, including: ^{90}Sr, ^{137}Cs, ^{241}Am, ^{243}Am, ^{238}Pu, $^{239/240}Pu$, and ^{241}Pu.

Estimated emissions calculated from the sampling data from 1988 to 1993 are shown in Table 3.1. This table lists estimates of total alpha and total beta emitted from each stack for each year. Samples are collected by passing stack air through a particulate filter for gross alpha and beta particulate analysis.

Table 3.1 3720 Facility Stack Sampling Data 1988-1993 (Ci)

	Main Stack EP-3720-01-S		**Annex Stack EP-3720-02-S**		**Southeast Stack EP-3720-03-S**	
Year	**Tot Alpha**	**Tot Beta**	**Tot Alpha**	**Tot Beta**	**Tot Alpha**	**Tot Beta**
1988	1.3E-6	4.2E-5	1.1E-7	3.8E-6	5.7E-7	1.9E-5
1989	1.8E-7	2.6E-5	3.6E-8	3.3E-6	7.3E-8	8.9E-6
1990	2.8E-7	4.3E-6	2.6E-8	8.0E-7	7.4E-8	8.3E-6
1991	3.2E-7	1.5E-5	1.8E-8	1.1E-6	3.6E-8	3.5E-6
1992	5.0E-8	3.8E-8	4.8E-8	4.3E-7	ND[1]	5.7E-7
1993	3.3E-8	1.2E-7	6.0E-8	2.7E-7	4.7E-8	1.3E-7

[1] ND = Not Detectable

Current analyses are done as described in Section 4.0. The Minimum Detection Level under the present analysis methods varies from sample to sample because it is sensitive to changes in background (which is highly variable) and counting time. Estimated emissions calculated from the sampling data for the 3720 main stack from 1994 to 1997 are shown in Table 3.2, and the estimated emission from the other stacks is shown in Table 3.3.

The sampling system is described in Section 3.4. Using this system, the values given in Tables 3.1 – 3.3 have some degree of uncertainty. However, these data show that releases of contaminant from the stack can be measured. A longer collection period (2-week samples) was instated in 1991 to provide samples with higher contaminant concentrations, allowing better resolution of the data.

Table 3.2 3720 Main Stack Annual Release Quantities

Nuclide	1994	1995	1996	1997
^{60}Co	4.2E-8	ND[a]	NA[b]	NA
^{65}Zn	ND	NA	NA	NA
^{90}Sr	7.8E-10	ND	7.0E-9	1.1E-8
^{95}Zr	ND	NA	NA	NA
^{106}Ru	ND	NA	NA	NA
^{125}Sb	ND	NA	NA	NA
^{134}Cs	ND	2.6E-8	NA	NA
^{137}Cs	ND	4.4E-8	NA	ND
$^{144}CePr$	ND	NA	NA	NA
^{154}Eu	ND	ND	NA	NA
^{155}Eu	ND	4.2E-8	NA	NA
^{241}Am	NA	ND	4.2E-9	ND
^{238}Pu	ND	ND	1.2E-9	ND
$^{239/240}Pu$	ND	6.4E-10	1.8E-9	ND
^{241}Pu	NA	NA	NA	ND
Unspec. Alpha	3.5E-8	2.9E-8	1.3E-8	1.9E-8
Unspec. Beta	3.9E-8	NA	8.0E-8	4.5E-8

(a) ND = Not Detected
(b) NA = Not Analyzed

Table 3.3 Annual Releases from Other 3720 Emission Points (Ci)

	EP-3720-02-S		EP-3720-03-S	
Year	Total Alpha	Total Beta	Total Alpha	Total Beta
1994	1.7E-8	6.8E-8	1.2E-8	3.7E-8
1995	3.6E-9	7.3E-8	ND	2.6E-8
1996	ND[a]	5.2E-8	9.3E-9	ND
1997	NE[b]	NE	2.7E-9	ND

(a) ND = Not Detectable
(b) NE = No Emissions

3.3.1.2 Liquid-Effluent Monitoring

Liquid-waste streams in the 3720 Facility have been served by two systems, as described in Section 2.4.2. Historically, no monitoring of the sanitary waste took place at the 3720 Facility. However, 300 Area sanitary liquid waste was sampled at the SNS system just before the waste entered the SNS septic tanks. Before 1997, sanitary wastes were discharged to a 300 Area septic tank/trench system. In 1997 the 300 Area SNS was connected to the City of Richland POTW. A brief description of the sampling and analysis program before connection to the City of Richland POTW is given in the *Westinghouse Hanford Company Effluent Report for 300, 400, and 1100 Area Operations* (McCarthy 1990). Because this sampling program is not specific to the 3720 Facility, the historical data from it are not given in this report.

The PS drained waste water from the laboratories and process areas with a low probability of contamination. Process waste water from nonradioactive work areas in the 3720 Facility was discharged to the 300 Area PS system without being monitored at the 3720 Facility. However, time-proportional samples of the 300 Area PS line just downstream of the 3720 and 333 Facilities were taken on a routine basis. Sampling from this system was discontinued in 1991, to be replaced with a new monitoring system using EPA-approved procedures. Data from the historic sampling system are not included in this report because the values do not add useful information and cannot be validated.

A pH monitor located in the 334 Building has been used in the past to detect high and low pH levels in the PS from the 333 and 3720 Facilities. This system has alarmed at low pH levels, indicating releases of acids to the PS stream. Sources of the releases were investigated when the alarm sounded. The monitor has not been active for many (> 5) years.

Radioactive waste water was put into barrels or bottles and shipped to locations able to handle the level of radioactivity. Because this effluent was never released to the environment, and future effluent of this type also will not be released, a discussion of sampling and monitoring of this waste is not pertinent to the FEMP.

A sampling project was undertaken in 1989 to provide some data to characterize liquid-waste streams contributing to the 300 Area Process Trench. The 300 Area PS line was sampled at a point downstream of the 3720 Facility. Four samples were taken from this point in May and July of 1989 with a special baseline sample taken over the Labor Day weekend of the same year. The samples were scheduled, collected, preserved, shipped, and analyzed according to the procedures of EPA protocol SW-846 (EPA 1986).

Several buildings (333, 334, 334-A, 303-M, and 313) other than the 3720 Facility contributed to the effluent that was sampled. In one sample, the concentration of alpha and beta activity in the effluent exceeded the administrative control values (ACVs) used by WHC to ensure that releases meet regulatory requirements. The baseline and the other three samples showed concentrations of less than the ACVs. Because the PS, at the point sampled, was a composite of several buildings, the contribution from the 3720 Facility alone is unknown. The data from this sampling effort can be found in the *Waste Stream Characterization Report* (WHC 1989). Since no data specific to the 3720 Facility alone were measured, none are supplied in this document.

As part of support efforts for the start-up of TEDF, a study was performed on the physical, chemical, and radiological makeup of the waste streams in the PS and RPS. The study of PNNL facilities (Thompson et al. 1997) was performed from March 1994 until September 1995. This study covered the 306, 320, 324, 325, 326, 327, 331, and 3720 buildings as well as covering some background and influent locations. The average results of the constituents analyzed from the 3720 PS are provided in Table 3.4. Details regarding number of samples, range, standard deviation, and other data quality discussions can be found in Thompson et al. (1997). The 3720 liquid effluent sampling and monitoring system is currently maintained by PNNL and used as needed to characterize effluents or investigate discharges of concern.

Table 3.4 Average Results from PS Characterization for 3720 1994-1995
From Thompson et al. (1997)

General Chemical Parameter (μg/L)				
Alkalinity	55,744		Total Carbon	17,800
Chemical Oxygen Demand	11,552		Total Dissolved Solids	106,341
Conductivity	197 (μmhos/cm)		Total Organic Carbon	2,876
pH	7.75 (unitless)			
Ammonia and Anions (μg/L)				
Ammonia	63		Nitrate	3,513
Chloride	5,911		Phosphate	699
Cyanide	4.4		Sulfate	15,733
Fluoride	506		Sulfides	231
Metals (μg/L)				
Aluminum	70		Manganese	3.90
Antimony	33		Mercury	0.19
Arsenic	2.0		Nickel	17
Barium	29		Potassium	1,325
Beryllium	0.18		Selenium	1.18
Cadmium	4.0		Silicon	2,650
Calcium	21,674		Sodium	5,216
Chromium	11.4		Strontium	96
Cobalt	6.9		Thallium	1.03
Copper	19.7		Tin	47
Iron	96		Vanadium	3.1
Lead	3.4		Zinc	65
Magnesium	4,728			
Volatile Organic Compounds (μg/L)				
1,1,2-Trichloroethane	0.75		Ethanol	14.1
1,2-Dichloroethylene	0.68		Ethylbenzene	0.63
Acetone	72.9		Hexone	13.3
Acetonitrile	1,075		Isopropyl Alcohol	15.8
Benzene	0.51		Methylene Chloride	1.36
Bromodichloromethane	1.2		Tetrahydrofuran	53.4
Carbon Disulfide	2.5		Toluene	69.39
Chloroform	12.9		Trichloroethene	1.28
Dibromochloromethane	1.7		Xylenes (total)	2.3
Semi-volatile Organic Compounds (μg/L)				
Bis(2-ethylhexyl)phthalate	3.18		Phenol	3.8
Di-n-butylphthalate	2.5		Tributyl Phosphate	4.66
Diethylphthalate	81			
Radiological Parameters (pCi/L)				
Gross Alpha	12.07		Uranium-235	0.346
Gross Beta	5.31		Uranium-238	6.5
Uranium-234	7.96			

3.3.2 Upset Conditions

The nature of upset conditions categorized as having potential environmental impact (SBMS, *Event Reporting*) that have occurred since 1980 at the 3720 Facility are shown in Table 3.5. The table summarizes the off-normal events.

Table 3.5 Unusual Occurrences in the 3720 Facility 1980-1997

Date	Class[a]	Description
1/29/80	UO	Unexpected loss of building water supply. PNL was not notified of a planned outage by HEDL.
7/11/81	UO	Water flooding of the 3720 annex basement caused by sump overflowing during scheduled power outage. Anoxic chamber imploded due to excess negative water pressure.
3/8/85	UO	Implosion of anoxic chamber window. Rubber stoppers improperly placed in vacuum relief line.
3/13/87	UO	Chemical spill. Mixture of methyl alcohol and bromine reacted during moving the solution between labs. Three staff members splashed with solution, but no adverse effects.
7/14/88	RE	Fire in drying oven.
11/13/90	ONO	Radioactive contamination found under sink.
12/5/90	ONO	Radioactive contamination found outside of normal confinement.
12/19/90	ONO	Limited operations in the building due to failure of a ventilation fan motor.
02/19/91	ONO	Loss of stack emissions sample due to wind blowing the sample paper out of the RPT's hand.
03/5/91	ONO	Radioactive contamination found under cabinet.
8/14/91	ONO	Loss of air pressure to ventilation damper actuator resulting in loss of air to laboratory fume hoods.
10/18/91	ONO	Mercury spill absorbed with spill kit, then disposed of as hazardous waste.
1/3/92	ONO	Replaced fan bearings and shaft.
11/10/93	ONO	R&D technician found a speck of beta-gamma, 8,000 dpm, on shoe sole. Shoe covering had not been required for work performed.
12/28/93	ONO	Craftsman severed thumb when he became distracted during exhaust fan maintenance.
11/22/94	ONO	Fire alarm triggered by maintenance on sprinkler head.
5/22/95	ONO	Sprinkler head in fume hood activated by operational furnace. Ventilation was off-line.
5/30/95	ONO	Fire alarm triggered by fire water supply maintenance testing.
8/30/95	ONO	Shipment of radioactive material from 3720 to 325 did not follow applicable procedures.
3/13/96	ONO	Two 55-gallon drums identified in building without inventory sheets.
4/29/96	ONO	Work control procedure violation during 3720 Building maintenance.
8/25/96	ONO	Water leak from HEPA filter exhaust housings caused by seal problem in lab vacuum pump.
9/11/96	ONO	Radiological contamination found in area not established for contamination control.
4/25/97	ONO	Researcher staff member shoe contaminated.
2/5/98	ONO	Staff member observed working in lab without proper dosimetry.

[a] UO = Unusual occurrence, RE = Reportable event, ONO = Off-normal occurrence.

Airborne materials released from these events were transported out the normal ventilation pathways to the stack. Stack sampling is described in Section 3.4. Upsets involving liquid effluents were discharged to the appropriate liquid-effluent system.

The types of events shown in Table 3.5 could be expected to occur during future operations. However, none of these events resulted in a significant release to the environment. The consequences of some of these events (e.g., chemical spills) happening during future operations are not expected to be significant as chemicals and other such

material are generally handled in small quantities and the building is in the process of being shut down. No additional release pathways or release of contaminants not already monitored are indicated with the data for historical upset conditions.

3.4 Radionuclide Air Sampling/Monitoring System Description

A new particulate radionuclide emission sampling system was installed at the 3720 Facility Main Stack (ESP-3720-01-S) in 1992. This stack, for which continuous sampling is required by 40 CFR Part 61 Subpart H (NESHAP) (EPA 1990), complies with continuous sampling requirements in the NESHAP. Figure 3.1 is a schematic representation applicable to all three of the stack sampling systems at the 3720 Facility. Detailed descriptions of each of the systems are provided below.

ESP-3720-01-S (3720 Facility Main Stack)

The airborne particulate sampling system on the 3720 Facility main stack, shown in Figure 3.2, incorporates a five-nozzle, isokinetic sampling probe assembly with probe nozzle inlet diameter = 0.264 in. (Figure 3.3). The probe assembly is positioned in the 36.1-ft-high stack, 25.1 ft (6.2 equivalent diameters) downstream of the exhaust duct entrance to the stack, and 3.7 ft (0.93 equivalent diameters) upstream of the stack exit.

ESP-3720-02-S (Annex Stack)

The airborne particulate sampling system on the "annex stack", shown in Figure 3.4, incorporates an eight-nozzle, isokinetic sampling probe assembly with probe nozzle inlet diameter = 0.25 in. The probe assembly is positioned in the 15.4-ft-high stack, 11.9 ft (5.6 equivalent diameters) downstream of the exhaust duct entrance to the stack, and 1.3 ft (0.65 equivalent diameters) upstream of the stack exit.

ESP-3720-03-S (Southeast Stack)

The airborne particulate sampling system on the "southeast stack", shown in Figure 3.5, incorporates a single-nozzle, isokinetic sampling probe assembly with probe nozzle inlet diameter = 0.56 in. The probe assembly is positioned in the 30.4-ft-high stack, 13.0 ft (5.2 equivalent diameters) downstream of the exhaust duct entrance to the stack, and 10.3 ft (4.1 equivalent diameters) upstream of the stack exit.

At each of the stacks, a sample transport line extends from the probe assembly to the stack base, where a sample collection filter is located. The transport line is of stainless steel tubing and is thermally insulated and electrically grounded. The Main Stack transport line is also heat traced.

The sampling rate is manually controlled using a valve located downstream of the particulate sampling filter. The control valve is adjusted so that the velocity of air entering the sample system through the sample probe assembly equals the average velocity of the stack gas at the sampling location, based on the most recent stack-velocity measurement. Sample flow is measured by a rotameter upstream of the control valve (Figure 3.1). Rotameter readings are corrected for pressure on the Main Stack sampling and monitoring system and expressed in standard units. Stack velocities are measured annually using EPA Method 2 (EPA 1971) or when significant modifications are made to the exhaust system. Minimum transport efficiency of the sample through the stack particulate sampling system has been calculated to be as shown in Table 3.6 for an assumed 1-micron AMAD aerosol at nominal sampler and stack flow rates: [1]

[1] Line loss calculations were performed using DEPO Version 4.0 (Riehl et al. 1996). A 1-micron AMAD polydisperse aerosol was assumed for the calculations based on the assumption that building operations and controls (HEPA filters) are "normal." A range of sampler and stack flow rate combinations were used as input and the resulting minimum efficiency is reported in the table.

Table 3.6 Sampling System Efficiencies for 1-µm Aerosol

System	System Efficiency
ESP-3720-01-S	95 %
ESP-3720-02-S	51 %
ESP-3720-03-S	88 %

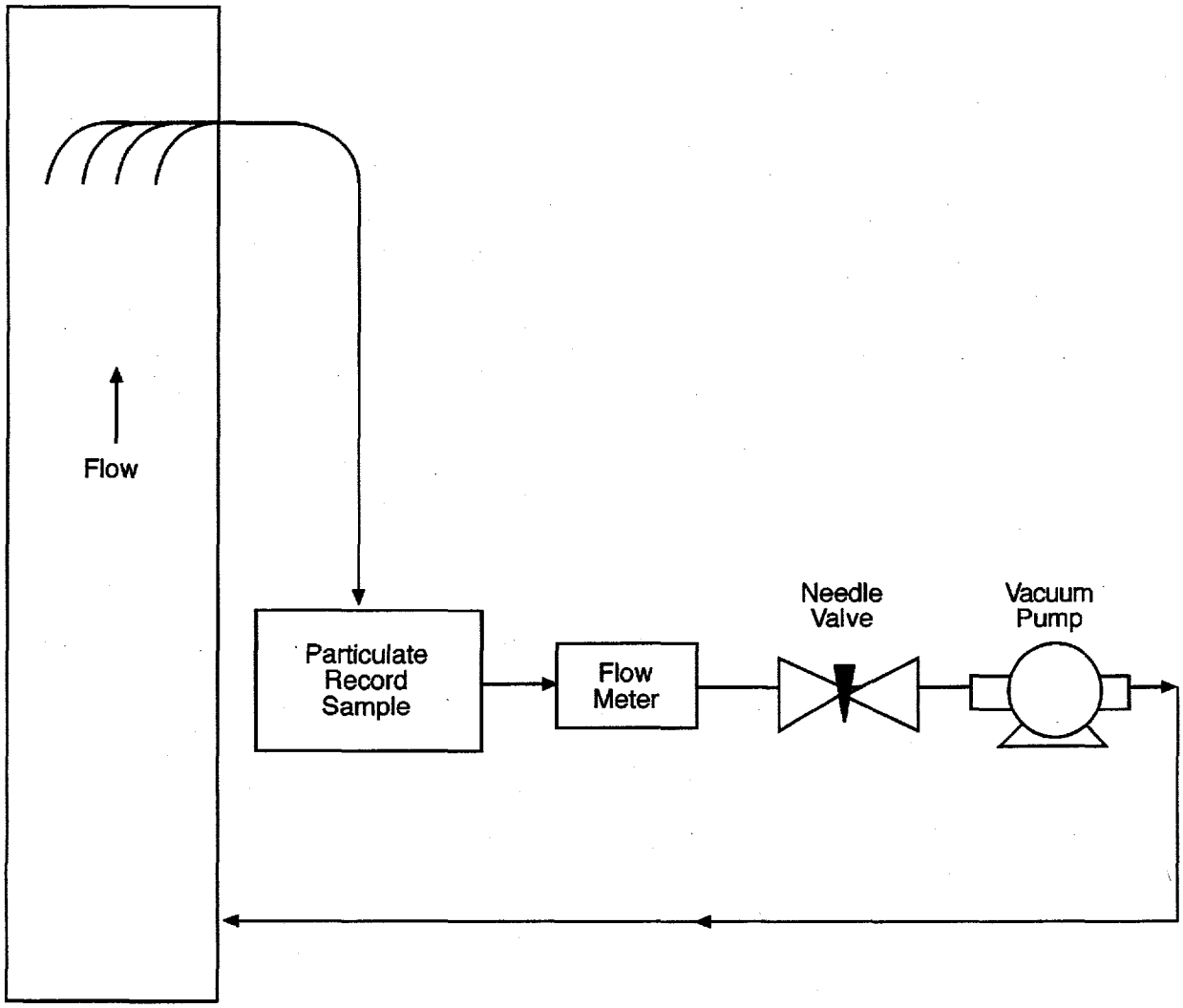

980800087.15

Figure 3.1 Schematic Diagram of Typical Stack Sampling System

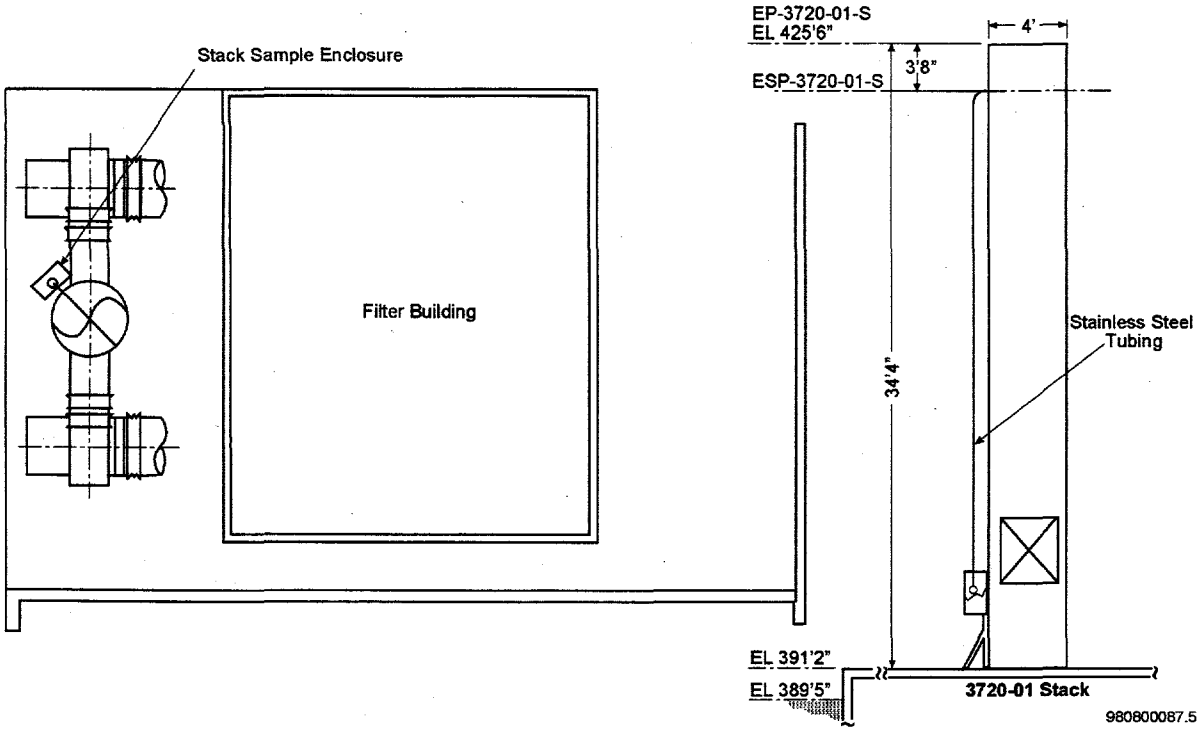

Figure 3.2 ESP-3720-01-S - 3720 Facility Main Stack

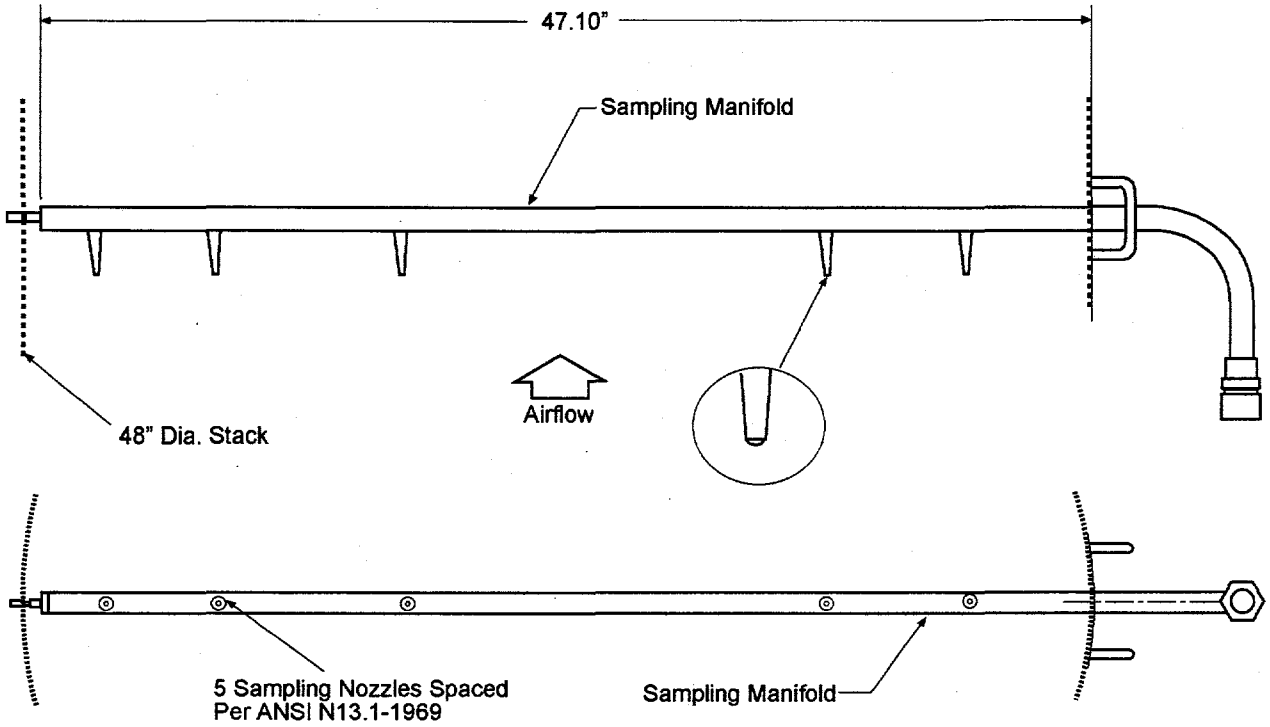

Figure 3.3 3720 Facility Main Stack Sampling Probe

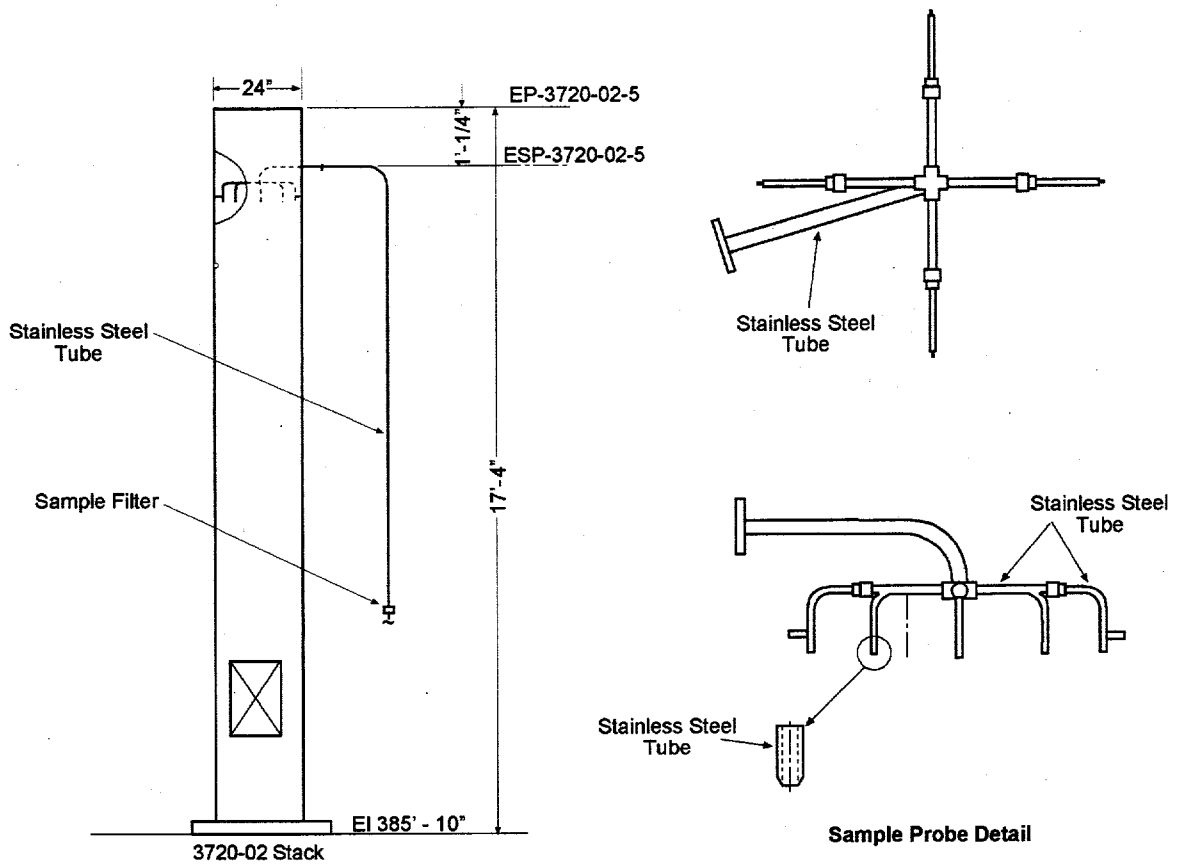

Figure 3.4 ESP-3720-02-S - Annex Stack

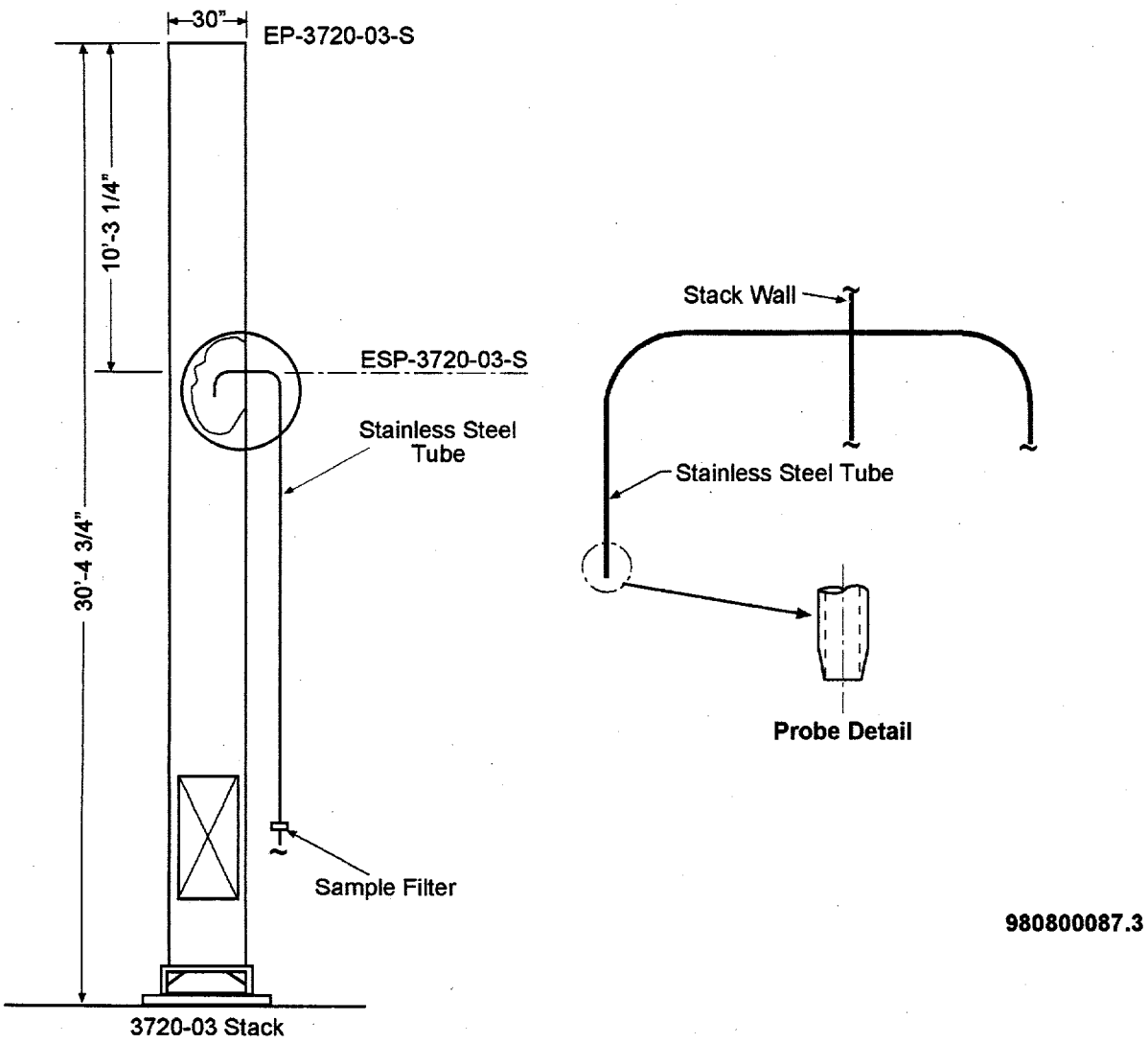

Figure 3.5 ESP-3720-03-S - Southeast Stack

Airborne particles are collected on a 47-mm-diameter membrane filter (Gellman Versapor 3000TN). The V-3000TN has an estimated retention efficiency for 0.3-micron particles of greater than 91% at face velocities of 180 fpm.

The sample collection filter is replaced biweekly for the Main Stack. For the other stacks, samples are collected over a two-week period on a quarterly basis, when operational. The sample filter is stored for a minimum of 5 days after removal from the sampler to permit decay of radon and thoron daughter radionuclides. The filter is then analyzed for radioactivity.

Each sample is screened individually for gross-alpha and gross-beta activity. The samples from ESP-3720-01-S are then composited over a 6-month period (semi-annual) and analyzed for specific radionuclides. A subcontracted analytical laboratory analyzes the samples using methods described in Section 4. Sample-analysis results are evaluated as described in Section 3.6.

To support development of a stack-emission measurement program for the 3720 Facility, knowledge of the types and quantities of radionuclides potentially present in the ventilation exhaust is necessary. An index of emission potential is used by PNNL so that the relative significance of different radionuclides and different emission points can be compared. The index, expressed in terms of a projected potential dose equivalent to a maximum offsite receptor, is based on emission-assessment methods in EPA (1971), Appendix D. It is assumed that no engineered

emission controls (e.g., HEPA filters) are provided in the ventilation system, and that without such controls, the potential for radionuclide emissions is related to the quantity and physical form of radioactive material in the facility. This assessment method is described in Ballinger et al. (1995).

Radionuclides of primary importance in the 3720 Facility from an emission-sampling standpoint are determined on an annual basis, using the above methods. For example, based on the 1998 assessment of radionuclide inventory, radionuclides potentially contributing ≥10% of the PTE are ^{238}Pu and ^{243}Am. The radionuclide inventory varies from year to year; therefore, the nuclides of interest, those contributing ≥10% of the PTE are updated annually to account for these variations.

3.5 Radionuclide Air Sampling and Monitoring System Performance

This section describes the performance capability of the stack sampling systems in terms of the offsite dose potentially resulting from a release. The determination of minimum sampler capability is based on a series of assumptions of worst-case-exposure scenarios, resulting in calculations of upper bound doses. Thus, the methods used here to evaluate system capability are not appropriate for assessing actual releases. A realistic assessment of the significance of a sample measurement can be made only by considering the actual operational and environmental conditions at the time of the release.

3.5.1 Stack Radionuclide Sampling System Performance

Performance criteria for sampling are provided in Section 3.2. Two of the criteria concern measurement sensitivity, and the third concerns measurement bias. The criteria for bias is based on conformance of the system to design and operational guidance in ANSI (1969) and DOE (1991)T. System-description information in Section 3.4, for the compliance sampling system (ESP-3720-01-S), is consistent with the design and operational guidance; thus, the bias criterion is met.

Sensitivity criteria (Section 3.2) for sampling are stated in terms of detectable offsite dose. According to the criteria, compliance sampling shall include measurementing radionuclides that could contribute greater than 10% of the PTE for the release point. Per performance criteria in Section 3.2.1, these radionuclides should be detectable at emission levels resulting in an annual committed effective dose equivalent of 0.01 mrem/yr. For the 3720 Facility, radionuclides measured at the compliance stack (ESP-3720-01-S) are $^{1\,238}$Pu, and ^{243}Am per the 1998 assessment. Total alpha activity and total beta activity are also measured at all stacks to screen for the presence of particulate radionuclides.

Annual release quantities associated with an effective dose equivalent of 0.01 mrem/yr were calculated from dose factors calculated using the EPA compliance code CAP-88 (Ballinger et al. 1995). These values are shown in Table 3.7.

The sensitivity of particulate radionuclide sampling is proportional to the collection efficiency of the sampler, the fraction of the emission quantity that is collected by the sampler (i.e., sampler efficiency), and the level at which the radionuclide can be detected in the collected sample. Under isokinetic sampling conditions, the 3720 Facility main stack particulate sampler will intercept approximately 1/6,500 of the activity emitted via the stack (i.e., ratio of sampling rate to stack flow rate); the annex stack and the southeast stack will intercept approximately 1/1,700 and 1/4,000 respectively. Loss of particulates in the sampling system are due to deposition, plateout, and filtering efficiency. The transport efficiencies of the sampling systems are shown in Table 3.6 for a 1-micron AMAD particulate aerosol.[1] Using the contractual minimum detection level specified in the analytical laboratory statement of work (Table 3.7), the annual minimum detectable release for specific radionuclides is as shown in Table 3.7. Supporting calculations are provided in Appendix C.

[1] Calculated using DEPO 4.0 (Riehl et al. 1996), assuming a particulate aerosol with an AMAD of 1.0 micron.

Table 3.7 Detection of Significant Radionuclides in 3720 Stack Emissions

Radionuclide	Analytical Limit (pCi/sample)[a]	Detectable Annual Release (Ci)			Emission Resulting in 0.01 mrem/yr (Ci)[e]
		Main Stack (01)	Annex Stack (02)	Southeast Stack (03)	
Beta Activity	38[b]	8.86E-6	4.2E-6	5.6E-6	2.0E-3 (as ^{137}Cs)
Alpha Activity	1.0[b]	2.3E-7	1.1E-7	1.5E-7	5.6E-5 (as ^{238}Pu)
^{90}Sr	38[c]	5.8E-7	NA[d]	NA	2.0E-3
^{137}Cs	38[c]	5.8E-7	NA	NA	2.0E-3
$^{241/243}$Am	0.7[c]	1.06E-8	NA	NA	3.4E-5
^{238}Pu	1[c]	1.5E-8	NA	NA	5.6E-5
$^{239/240}$Pu	1[c]	1.5E-8	NA	NA	5.0E-5
^{241}Pu	1[c]	1.5E-8	NA	NA	5.0E-5

(a) From RAT Statement of Work
(b) Includes correction for 15% reduction of the alpha and beta emissions originating from the sample that are absorbed by the sample media and surface dirt on the filter (Higby 1984).
(c) Value for a 6-month composited group.
(d) NA - Not Applicable
(e) Based on dose per release factors to maximally exposed individual (MEI) calculated using CAP-88 (Ballinger et al. 1995).

From Table 3.7, it is apparent that the capability of the 3720 Facility stack sampling system exceeds the minimum criteria for detection of radionuclides in emissions.

3.6 Handling of Radionuclide Air Sampling and Monitoring Data

Results obtained from the record sampling program are used to evaluate existing facility emission levels and to calculate annual emission quantities for compliance determination and reporting purposes.

Particulate samples are collected as described in Section 3.4. Analysis of samples by a laboratory is described in Chapter 4. Data are evaluated using documented and approved procedures. Data evaluation procedures are based on guidance in DOE (1991), *Environmental Regulatory Guide for Radiological Effluent Monitoring and Environmental Surveillance* and EPA (1980), *Upgrading Environmental Radiation Data.*

Airborne emission sampling data are reviewed for anomalies and trends. Provisional release estimates are updated throughout the sampling year (calendar year) as data are received. At the completion of the calendar year, data are reviewed, and the provisional release estimate is refined, as necessary, to account for anomalies or missing data as well as a significantly skewed data set. Anomalous data are investigated, and conclusions of the investigation are documented.

Final release quantities include corrections for isokinetic sampling efficiency, sample transport losses, sample self-absorption, decay, counting efficiency, background, and collection media efficiency.

3.7 Calibration and Maintenance of Radionuclide Air Sampling & Monitoring Equipment

Sampling and monitoring equipment, including rotameters, are maintained and calibrated according to predetermined schedules. Stack flow rates are measured using a standard-type pitot tube that is recognized by EPA as a primary calibration standard.

Continuous, "major", sampling systems are inspected each workday by the PNNL Radiation Protection Section for proper flow-rate setting and system operation. "Minor" sampling systems are inspected each workday during sampling periods.

3.8 Alternative Sampling Methods for Radionuclide Air Emissions

All sampling and monitoring system components have replacement units available, so down time is usually limited to a few hours, at most.

Alternative methods exist for assessing impacts of facility emissions. Workplace air-monitoring systems provide evidence of the presence or absence of radionuclides in room air. Contamination surveys, routinely performed throughout the facility, provide additional evidence of contamination spreads. Air-emission control systems are routinely checked for leaks.

An extensive environmental surveillance program is operated for the Hanford Site by PNNL. This program is described in detail in the Hanford Site Environmental Monitoring Plan (DOE-RL 1997, DOE/RL-91-50). The program performs ambient air sampling around the 300 Area perimeter as well as along the Hanford Site boundary and in adjacent communities. In addition to ambient air sampling, the environmental surveillance program samples groundwater, river water, drinking water, foodstuffs, soil, native vegetation, and aquatic and terrestrial animals. Annual reports issued by the Hanford Environmental Surveillance Program document the results of these samples.

3.9 Liquid Effluent Sampling and Monitoring

The liquid effluent sampling and monitoring system for the 3720 Building is used to characterize facility effluents and to investigate potential discharges of concern. Administrative controls developed by the TEDF operating contractor specify the following criteria for liquid effluent sampling:

- Sampling is required to characterize waste streams discharged to TEDF if process knowledge is inadequate; process knowledge may be used if the facility has only repetitive, well-characterized operations that are consistent over time.
- Characterization sampling must ensure that a valid sample is obtained.
- The number of characterization samples collected must be sufficient to clearly demonstrate the stream has been adequately characterized.
- Characterization samples shall be analyzed for all classes of constituents not known to be absent from the waste stream.
- Characterization samples shall be collected and handled as specified in a table provided by the TEDF operating contractor. This table lists hold times, minimum sample sizes, sample types (grab/composite), preservatives, and sample containers for various analyses based on regulatory requirements.

The liquid effluent sampling and monitoring system installed for the 3720 Building is located next to a manhole just south of the building. At this point, all PS liquid effluents from the building are combined (the 3720 Building has no RPS) and can be sampled and monitored as needed to meet the applicable requirement. The refrigerated sampling system has the ability to take grab or flow-composite samples and controls the temperature of the samples to ensure preservation requirements are met. In addition, PNNL's Effluent Management Group has sampling procedures in place and a contract with an accredited analytical laboratory to ensure that sampling requirements are met.

A schematic of the system is provided in Figure 3.6. As shown, pH and conductivity probes are located in the discharge pipe. A variable gate flow meter is upstream of the probes to monitor flow and a sample tube is located in conjunction with the flow meter. The tube can draw grab or flow-composite samples from the stream into a sample bottle located in nearby. As noted in Section 3.3.1.2, characterization sampling has been performed using this system and the system is maintained to perform sampling as needed

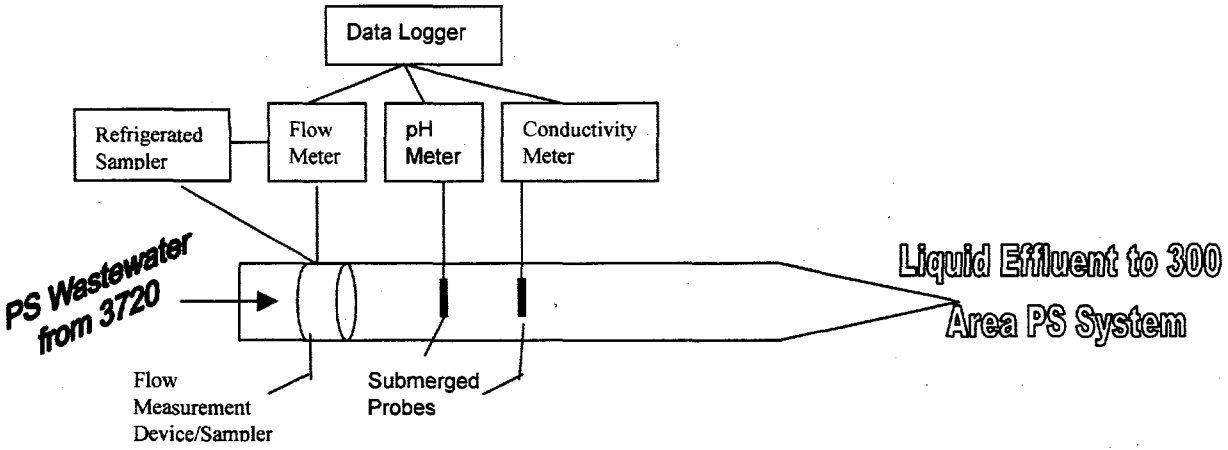

Figure 3.6 Schematic of Liquid Effluent Sampling and Monitoring System for 3720

3.10 References.

ANSI 1969. *Guide to Sampling Airborne Radioactive Materials in Nuclear Facilities*, ANSI N13.1-1969. American National Standards Institute

ANSI 1980. *Specifications and Performance of Onsite Instrumentation for Continuously Monitoring Radioactivity in Effluents,* ANSI N42.18 1980b. American National Standards Institute

Ballinger, M. Y., S. J. Jette, and M. J. Sula. 1995. *Assessment of Unabated Facility Emission Potentials for Evaluating Airborne Radionuclide Monitoring Requirements at Pacific Northwest National Laboratory – 1995*, PNL-10855, Pacific Northwest Laboratory, Richland, Washington.

DOE 1987. *General Design Criteria*, DOE 6430.1A, U.S. Department of Energy Order. U.S. Department of Energy. Washington D.C.

DOE 1988. *General Environmental Protection Program*, DOE 5400.1, U.S. Department of Energy Order. U.S. Department of Energy. Washington D.C.

DOE 1990. *Radiation Protection of the Public and the Environment*, DOE 5400.5, U.S. Department of Energy Order. U.S. Department of Energy. Washington D.C.

DOE 1991. *Environmental Regulatory Guide for Radiological Effluent Monitoring and Environmental Surveillance*, DOE/EH-0173T. U.S. Department of Energy. Washington D.C.

DOE 1997. *Environmental Monitoring Plan,* DOE/RL-91-50, Rev 2, United States Department of Energy, Richland Operations Office, Richland, Washington.

EPA 1971. *Regulations on Standards of Performance for New Stationary Sources, Appendix A: Reference Methods.* 40 CFR 60. Environmental Protection Agency, U.S. Code of Federal Regulations.

EPA 1980. *Upgrading Environmental Radiation Data*.. EPA 520/1-80-012. U.S. Environmental Protection Agency. Washington D.C.

EPA 1986. *Test Methods for Evaluating Solid Waste, Physical/Chemical Methods*, SW-846, Third Edition. U.S. Environmental Protection Agency. Washington, D.C.

EPA 1990. *National Emission Standards for Hazardous Air Pollutants.* 40 CFR 61. Environmental Protection Agency, U.S. Code of Federal Regulations. 1990.

Higby, D. P. 1984. *Effects of Particle Size and Velocity on Burial Depth of Airborne Particles in Glass Fiber Filters.* PNL-5278, Pacific Northwest Laboratory, Richland, Washington.

McCarthy, M. J. 1990. *Westinghouse Hanford Company Effluent Report for 300, 400, and 1100 Area Operations for Calendar Year 1989.* WHC-EP-0267-1, Westinghouse Hanford Company, Richland, Washington.

Riehl, J., V. R. Dileep, N. K. Anand, A. R. McFarland. 1996. *Depostion 4.0, An Illustrated Users Guide.* Texas A&M University, College Station, Texas.

SBMS, MA-8. 1998. *Waste Management and Environmental Compliance.* Pacific Northwest National Laboratory, Richland, Washington.

SBMS, Airborne Emissions. 1998. *Airborne Emissions.* Standards-Based Management System Subject Area (http://sbms.pnl.gov:2080/standard/0g/0g00t010.htm), Pacific Northwest National Laboratory, Richland, Washington.

SBMS, Creating or Modifying Engineering Calculations, Drawings, and Specifications. 1997. *Creating or Modifying Engineering Calculations, Drawings, and Specifications.* Standards-Based Management System Subject Area (http://sbms.pnl.gov:2080/standard/91/9100t010.htm), Pacific Northwest National Laboratory, Richland, Washington.

SBMS, Managing Liquid Effluents. 1998. *Managing Liquid Effluents.* Standards-Based Management System Subject Area (http://sbms.pnl.gov:2080/standard/0q/0q00t010.htm), Pacific Northwest National Laboratory, Richland, Washington.

SBMS, Managing Nonradioactive Chemical Waste. 1998. *Managing Nonradioactive Chemical Waste.* Standards-Based Management System Subject Area (http://sbms.pnl.gov:2080/standard/0f/0f00t010.htm), Pacific Northwest National Laboratory, Richland, Washington.

SBMS, Event Reporting. 1997. *Event Reporting.* Standards-Based Management System Subject Area (http:// sbms.pnl.gov:2080/standard/27/2700t010.htm). Pacific Northwest National Laboratory, Richland, Washington.

SBMS, Working with Chemicals. 1997. *Working With Chemicals.* Standards-Based Management System Subject Area (http://pnl.gov:2080/standard/03/0300t010.htm), Pacific Northwest National Laboratory, Richland, Washington.

Thompson, C. J., M. Y. Ballinger, E. G. Damberg, and R. G. Riley. 1997. *Characterization and Monitoring of 300 Area Facility Liquid Waste Streams During 1994 and 1995.* Pacific Northwest National Laboratory, Richland, Washington.

WAC 1994. *Radiation Protection - Air Emissions*, WAC 246-247, Washington Administrative Code. Washington Department of Health.

WDOE and WDOH 1998. *Hanford Site Air Operating Permit*, HNF-AOP-97-1. Washington State Department of Ecology and Washington State Department of Health.

WHC 1989. *Waste Stream Characterization Report*, WHC-EP-0287. Westinghouse Hanford Company. Richland, Washington.

This page intentionally left blank.

4.0 Laboratory Analyses

This section provides information on the analytical laboratories and procedures used to analyze samples collected in support of the PNNL effluent monitoring program. As stated in previous sections, these samples may contain radioactivity associated with emissions from the 3720 Facility stacks. Because liquid discharges from the 3720 Facility are sampled by WMHC at the point of collection for final disposal and at the TEDF, and because sampling for chemical constituents is currently not performed, analysis of PNNL-collected effluent samples at the 3720 facility is limited to determination of radioactivity in samples collected from the building stacks.

Section 3.4 describes the types of samples collected by the building stack sampling systems. These samples are for particulate radionuclides on filter paper. The laboratories and procedures used to perform these analyses are described in Section 4.1. Section 4.2 provides a description of procedures employed by PNNL and its supporting analytical laboratories.

4.1 Analytical Procedures

Analytical procedures for alpha and beta particulate radioactivity and isotopic analysis are provided in this section. The principal radionuclides in 3720 Facility emissions are described in Section 3.0. These radionuclides are detectable using procedures described in this section. Analyses are performed by the Radioanalytical Application Team (RAT) of the PNNL Radiochemical Processing Group located in the Radiochemical Processing Laboratory (RPL). All analytical work associated with radionuclide sampling is performed according to required methods per PNNL contract and statement of work (SOW) with the analytical laboratory. The SOW is prepared to meet the QA requirements from 40 CFR 61 (EPA 1990).

4.1.1 Determination of Alpha and Beta Activity on Particulate Air Filter

Particulate air filter samples from the 3720 Main Stack are collected every two weeks and from the Southeast Stack and Annex Stack (when operational) on a quarterly basis, as described in Section 3.4. The samples are initially delivered to a laboratory at the 3745 Building operated by PNNL's Radiation Protection Section. The samples are held at the 3745 Building or the RPL to allow for adequate decay of radon daughter radionuclides.

Following the hold time for radon daughter decay, each particulate filter is delivered to the RPL RAT. Analytical services are performed according to documented requirements in a statement of work (SOW).

Samples are received, logged in, classified, and analyzed according to procedures documented as Standard Operating Procedures (SOPs).

The RPL RAT particulate alpha and beta analysis method are documented in RAT SOPs. Samples are counted on an alpha and beta proportional counter. The counters are operated with a full open energy window and are calibrated using ^{239}Pu and ^{90}Sr sources corrected for self-absorption. As specified in the SOW, required detection levels are 1-pCi/sample alpha and 38-pCi/sample beta activity on a single (2-week sample) filter for Type I and Type II errors of 0.05. The detectable concentrations for each stack are shown in Table 4.1 (supporting calculations are provided in Appendix C). Section 3.5 addresses the performance capability of the particulate emission sampling program in terms of detectable offsite dose.

Table 4.1 Detectable Concentrations for Emissions from 3720 Facility Stacks (μCi/cm^3)

	Main	Annex	Southeast
Alpha	7.0E-16	3.0E-15	1.3E-15
Beta	2.7E-14	1.1E-13	4.9E-14

4.1.2 Isotopic Analysis

The record particulate filters for the Main Stack are analyzed by RAT for alpha and beta, as discussed in Section 4.1.1, and are further analyzed for ^{90}Sr, ^{137}Cs, ^{241}Am, ^{243}Am, ^{238}Pu, $^{239/240}$Pu, and ^{241}Pu. These analyses are performed by RAT on particulate samples composited on a semi-annual basis. The RAT composite preparation and analysis methods used for the above isotopes are listed in Table 4.2.

Before digesting the particulate filters for isotopic analysis, the filters are grouped on a semi-annual basis in preparation for gamma scan analysis. The semi-annual groups of samples are transferred to a standard geometry container for counting on the gamma detectors. Intrinsic Germanium (high-purity germanium [HPGE]) detectors are used to detect isotopes with gamma ray energies between 60 and 2000 KeV.

Table 4.2 Isotopic Separation and Analysis Methods

Method
Air Filter Preparation and Compositing
Gamma Analysis Sample Preparation, All Matrices
Electrodeposition Procedure for the Actinides
Strontium Determination for 6-month Filter Composites
Isotopic Plutonium Determination for 6-month Filter Composites
Isotopic Americium/Curium Determination for 6-month Filter Composites

Following the gamma scan, the semi-annual groups are digested and the elements of interest are separated from other elements and the sample matrix by chemistry. The ^{90}Sr content is determined by the chemical separation and counting of a daughter element, ^{90}Y. The strontium is separated from other elements chemically, then ^{90}Y is permitted to grow into equilibrium with the ^{90}Sr. The ^{90}Y is then separated and processed to determine the chemical recovery and counted on a low background beta proportional counter. The quantity of ^{90}Sr is then determined based on the quantity of the daughter ^{90}Y produced.

Plutonium is separated from other elements and the sample matrix by adsorption on an anion exchange column. The plutonium is then processed chemically and electroplated or coprecipitated on rare earth fluorides. Isotopic concentrations of the deposited material is determined by alpha spectrometry. Following the removal of the plutonium, the sample matrix is further processed chemically and the americium and curium removed by passing the sample through a cation exchange column. The americium and curium are eluted from the column and either electroplated or coprecipitated. As with the plutonium, isotopic concentrations of the deposited material is determined by alpha spectrometry.

4.2 Procedures

PNNL's Effluent Management Group (EM) maintains documented technical and operation procedures for all aspects of environmental monitoring. SBMS (Technical and Operations Procedures) contains the requirements for preparation, review, and approval of these procedures. EM procedures incorporate all required elements of the SBMS (Technical and Operations Procedures).

Sampling procedures include identification of applicable staff, identification of possible hazards encountered while collecting samples, emergency contacts, any applicable prerequisites to performing the work, and work instructions. The work instructions address areas such as: equipment operation; sample collection media to be used; amount of sample to be collected; and sample preservatives (as needed).

Effluent Management maintains documented chain-of-custody procedures for all samples. Procedures include provisions for transfer of samples between operational staff, to and from regulated storage areas, and to the analytical laboratory. Both PNNL and any offsite analytical services contractor implement chain-of-custody within the Laboratory.

The analytical laboratory maintains documented and approved chain-of-custody procedures for the preliminary analyses of particulate emission samples, and for record analysis of particulate air filters.

Samples are stored for eighteen months before being discarded.

4.3 References

EPA 1990. *National Emission Standards for Hazardous Air Pollutants.* 40 CFR 61. Environmental Protection Agency, U.S. Code of Federal Regulations. 1990.

SBMS, Technical and Operations Procedures. 1997. *Technical and Operations Procedures.* Standards-Based Management System Subject Area (http://sbms.pnl.gov:2080/standard/74/7400t010.htm). Pacific Northwest National Laboratory, Richland, Washington.

This page intentionally left blank.

5.0 Quality Assurance Requirements

5.1 Quality Assurance Plan

A number of Quality Assurance (QA) Plans were developed to address QA for the different type of effluent monitoring activities performed by PNNL, including: radiological air, chemical air and water release sampling and monitoring. These plans were integrated into one Effluent Management QA Plan in 1997. This plan addresses QA for all PNNL effluent management activities. The QA program described by the plan is based on the following general requirements and guidance:

- DOE Order 5700.6C, *Quality Assurance* (DOE 1991a)
- 10 CFR 830.120 *Quality Assurance* (DOE 1994)
- PNNL Standards-Based Management System Subject Area, *Quality Assurance Planning* (SBMS, QA Planning)
- DOE Order 5400.1, *General Environmental Protection Program* (DOE 1988)
- U.S. Environmental Protection Agency (EPA) QAMS-005/80, *Interim Guidelines and Specifications for Preparing Quality Assurance Project Plans* (USEPA 1980)
- American National Standards Institute/American Society for Quality Control (ANSI/ASQC) E4-1994, *American National Standard Specifications and Guidelines for Quality Systems for Environmental Data Collection and Environmental Technology Programs* (ANSI/ASQC 1994)
- DOE/EH-0173T, *Environmental Regulatory Guide for Radiological Effluent Monitoring and Environmental Surveillance* (DOE 1991b)

In addition, QA requirements specified in permits and regulations, including 40 CFR 61 (EPA 1990), for PNNL effluent sampling or monitoring activities are incorporated into the QA Plan.

5.2 Internal and External Plan Review

DOE 5400.1 (DOE 1988) states that the Environmental Monitoring Plan (EMP) will be reviewed annually and updated every 3 years. As a support document to the EMP, the FEMP will also be updated every 3 years. At a minimum, the FEMP assessment will be performed annually.

5.3 References

ANSI/ASQC 1994, *American National Standard Specifications and Guidelines for Quality Systems for Environmental Data Collection and Environmental Technology Programs.* E4-1994. American National Standards Institute/American Society for Quality Control.

DOE 1988. *General Environmental Protection Program.* DOE Order 5400.1. U.S. Department of Energy Order. U.S. Department of Energy. Washington D.C..

DOE 1991a. *Quality Assurance.* DOE 5700.6C. U.S. Department of Energy Order. U.S. Department of Energy. Washington D.C..

DOE 1991b. DOE/EH-0173T, *Environmental Regulatory Guide for Radiological Effluent Monitoring and Environmental Surveillance.* U.S. Department of Energy. Washington D.C..

DOE 1994. *Quality Assurance.* 10 CFR 830.120. Department of Energy, U.S. Code of Federal Regulations.

EPA 1980. *Interim Guidelines and Specifications for Preparing Quality Assurance Project Plans.* QAMS-005/80. U.S. Environmental Protection Agency. Washington D.C..

EPA 1990. *National Emission Standards for Hazardous Air Pollutants.* 40 CFR 61. Environmental Protection Agency, U.S. Code of Federal Regulations. 1990.

SBMS, QA Planning 1997. *Quality Assurance Planning*. Standards-Based Management System Subject Area (http:// sbms.pnl.gov:2080/standard/87/8700T010.htm). Pacific Northwest National Laboratory, Richland, Washington.

6.0 Program Implementation Procedures

The Hanford Site Environmental Monitoring Plan (EMP) (DOE 1997) documents the effluent-monitoring and environmental surveillance programs for the Hanford Site.

6.1 Interface with the Near-facility Environmental Monitoring Program

The EMP divides the effluent-monitoring coverage into two areas, the FEMPs and the Near-Facility Environmental Monitoring Program. The FEMPs cover the monitoring of effluents from facilities at the facility. PNNL's Effluent Management Project maintains implementation procedures for all PNNL facility-monitoring activities. These procedures meet the PNNL requirements for technical and operating procedures (SBMS, Technical and Operations Procedures) and ensure that facility effluent sampling and monitoring is conducted compliantly. The Near-Facility program monitors air, surface water, groundwater, soil, sediment, vegetation, and biota around site facilities to evaluate the adequacy of effluent control at various facilities at the Hanford Site. The program is conducted by Waste Management Federal Services, Inc. Northwest Operations (WMHC).

6.2 Interface with the Operational Environmental Surveillance Program

Environmental surveillance of the 300 Area and the surrounding onsite and offsite areas is performed by the PNNL Hanford Site Surface Environmental Surveillance Project and the PNNL Site-Wide Groundwater Monitoring Project. These projects are notified in the event of actual or apparent new or off-normal discharges to the soil, surface waters, or air so they can assist in assessing their environmental and compliance significance. The data from these programs are also useful to verify the occurrence or nonoccurrence of facility releases. These surveillance projects are described in detail in DOE (1997).

6.3 References

DOE 1997. *Environmental Monitoring Plan, United States Department of Energy, Richland Operations Office.* DOE/RL-91-50, Rev. 2, U. S. Department of Energy, Richland Washington.

SBMS, Technical and Operations Procedures. 1997. *Technical and Operations Procedures.* Standards-Based Management System Subject Area (http://sbms.pnl.gov:2080/standard/74/7400t010.htm). Pacific Northwest National Laboratory, Richland, Washington.DOE 1997. *Environmental Monitoring Plan,* DOE/RL-91-50, Rev 2, United States Department of Energy, Richland Operations Office, Richland, Washington.

This page intentionally left blank.

7.0 Reporting

This section discusses describes the compliance reporting and notification requirements related to facility effluent monitoring activities for the 3720 Facility. It also identifies the requirements and provides an overview of the procedural steps for the notification, investigation, and reporting of all environmental off-normal events (ONE) for PNNL operations.

7.1 Routine Effluent Monitoring Reports

On a periodic basis, effluent monitoring data are gathered by PNNL on specific DOE Richland Operations Office (DOE-RL) facilities for compilation and reporting to DOE and various regulatory agencies.

The following effluent monitoring reports are submitted to regulatory agencies:

Airborne Effluent

- An Annual NESHAP Air Emissions Report for the Hanford Site providing the required annual emissions measurements and climatological data is submitted to the U.S. Environmental Protection Agency (EPA) and the Washington State Department of Health (WDOH) for the Hanford Site radiological radioactive airborne emissions;
- The Annual Radioactive Effluent and Onsite Discharge Data Report is submitted to DOE-Headquarters, the EPA, and WDOH through DOE-RL after compilation by EG&G Idaho;
- Semiannual Reports providing updates of compliance related activities under the Hanford Site Air Operating Permit (AOP) (WDOE and WDOH to be issued in 1999) are submitted to WDOE.
- The Annual Compliance Certification is provided to WDOE as to the continuous or intermittent compliance of activities under the AOP.

Liquid Effluent

- WDOE is provided an annual report on significant discharges of hydrotest, maintenance, or construction wastewater discharged to ground as required by permit ST-4508 (WDOE 1997).
- WDOE is provided an annual inventory of miscellaneous liquid effluent discharges to ground as required by WDOE Consent Order DE 91NM-177 (WDOE 1991).

Other

- WDOE is provided with a monthly status report of all reportable spills from the previous month through DOE-RL;

7.2 Non-Routine Notifications and Reports

There are a number of reports, including notification reports that are required with respect to effluent monitoring activities.

- A Notice of Construction (NOC) must be provided to WDOH and/or WDOE and/or the Benton Clean Air Authority (BCAA), depending on radiological or chemical emissions type, whenever a new emission unit is to be created or if there is to be significant modification to an existing emission unit.
- A Notice of Transient or Abnormal Conditions must be provided to WDOH as soon as practicable in accordance with AOP requirements (AOP to be issued in 1999). A Notification Follow-up Report may also be requested in addition to the initial notification.
- Report of Closure shall be submitted to WDOH whenever an emission unit covered under WAC 246-247 (WAC 1994) ceases emission.
- Notification of Renovation/Demolition Activities Involving Asbestos must be provide to the BCAA anytime work involving renovation or demolition activities in a facility with asbestos is planned.

7.3 Event Notification and Reporting

"Events" or conditions may adversely affect DOE or contractor personnel, the public, property, the environment, or the DOE mission. Staff who discover an event that requires mitigation must notify the Battelle single-point-contact to begin the response and mitigation process. Managers who are notified of events within their domain participate in the recovery, evaluation, analysis, and corrective action of the event. These two processes, staff notification and management participation, are described in a PNNL Standards-Based Management System (SBMS) Subject Area (SBMS, Event Reporting). The Subject Area incorporates requirements from DOE 232.1A, "Occurrence Reporting and Processing of Operations Information" (DOE 1997) and associated DOE-RL Directives (RLIDS).

7.4 References

SBMS, Event Reporting. 1997. *Event Reporting*. Standards-Based Management System Subject Area (http:// sbms.pnl.gov:2080/standard/27/2700t010.htm). Pacific Northwest National Laboratory, Richland, Washington.

DOE 1997. *Occurrence Reporting and Processing of Operations Information*, DOE 232.1A. U.S. Department of Energy Order. U.S. Department of Energy. Washington, D.C.

WAC 1994. *Radiation Protection - Air Emissions*, WAC 246-247, Washington Administrative Code. Washington Department of Health.

WDOE 1991. *Consent Order in the Matter of the Compliance by United States Department of Energy with Chapter 70.105 and 90.48 RCW and the Rules and Regulations of the Department of Ecology*, DE 91NM-177. Washington State Department of Ecology.

WDOE 1997. *State Waste Discharge Permit for the Discharge of Hydrotest, Maintenance, and Construction Discharges*, ST-4508. Washington State Department of Ecology.

WDOE and WDOH 1999. *Hanford Site Air Operating Permit*, HNF-AOP-97-1. Washington State Department of Ecology and Washington State Department of Health.

Appendix A

Projection of Offsite Emission Dose

DOE Order 5400.1 states that Environmental Monitoring Plans (EMP) "shall be prepared for each site, facility, or process that uses, generates, releases, or manages significant pollutants or hazardous materials" (DOE Order 5400.1, IV-2). To support the EMP, Facility Effluent Monitoring Plans (FEMPs) are being prepared for those facilities that have the potential to release significant pollutants or hazardous materials. A methodology has been developed to determine whether potential releases of radioactive material are significant. This method is the same as that used to determine whether monitoring is required for the National Emission Standards for Hazardous Air Pollutants (NESHAPs - U.S. Code of Federal Regulations, Title 40 Part 161, Subparts H and I) and is described in *Radionuclide Monitoring Requirements at Pacific Northwest National Laboratory - 1995.* (Ballinger et al. 1995, PNL-10855).

The first step in the method (called the FEMP Determination when used to determine whether or not a FEMP is needed for a facility) is to obtain a listing of the facility inventory. The inventory includes the radionuclide, isotope, quantity, and form. Form can be gas, liquid or powder, solid (nondispersible), contained (in sealed sourced or DOT containers), or exempt (sealed sources meeting certain criteria). At PNNL, radioactive source and material information is maintained using three separate inventory systems: (1) facilities management radioactive materials inventory, (2) composite radioactive materials inventory, and (3) nuclear materials inventory. An identifier on the inventory listing indicates the inventory system that the information was obtained from. Additional detail on the FEMP Determination method is provided in PNL-10855. A table is provided showing a listing by nuclide if the radioactive material inventory in 3720. The table shows the total activity and the percent contribution to the total unabated Potential-to-Emit for the facility.

Table A.1.

FEMP Dose Contribution by Nuclide for: 3720 Building

Total PTE Dose: 6.79E-01 mrem

Nuclide	Inventory (Ci)	Dose (mrem)	% Total
Ac-227	1.00E-03	3.30E-04	0.05%
Ag-110	1.30E-04	8.32E-18	0.00%
Am-241	3.01E-02	8.72E-03	1.28%
Am-243	2.36E-01	6.85E-02	10.09%
Ba-133	7.42E-03	9.63E-06	0.00%
Bi-207	5.20E-06	5.20E-10	0.00%
C-14	2.51E-02	1.24E-06	0.00%
Ce-144	1.00E-03	3.70E-07	0.00%
Cf-252	1.97E-06	1.56E-07	0.00%
Cm-244	5.95E-03	8.93E-04	0.13%
Co-57	6.34E-02	6.10E-08	0.00%
Co-60	3.85E-02	1.93E-04	0.03%
Cr-51	1.87E-06	4.30E-12	0.00%
Cs-137	9.99E-02	4.87E-04	0.07%
Eu-152	1.22E-02	1.08E-06	0.00%
Eu-154	2.02E-05	8.08E-08	0.00%
Eu-155	2.07E-04	3.52E-08	0.00%
Fe-55	3.45E-08	2.38E-13	0.00%
H-3	2.05E-03	8.41E-10	0.00%
I-125	3.00E-03	8.40E-06	0.00%
I-129	1.01E-03	4.82E-05	0.01%
Na-22	2.02E-02	4.84E-05	0.01%
Ni-59	4.21E-07	3.41E-12	0.00%
Ni-63	1.12E-03	1.12E-08	0.00%
Np-235	1.00E-03	4.90E-06	0.00%
Np-237	1.50E-02	3.89E-03	0.57%
Pb-210	7.34E-05	4.62E-06	0.00%
Pu-236	9.17E-09	4.03E-10	0.00%
Pu-238	3.10E+00	5.58E-01	82.20%
Pu-239	4.35E-01	3.73E-02	5.50%
Pu-242	6.09E-09	1.10E-09	0.00%
Ra-226	6.50E-03	3.40E-05	0.01%
Ra-228	1.00E-03	7.90E-06	0.00%
Sb-125	5.27E-06	2.85E-09	0.00%
Sr-85	2.00E-03	9.80E-06	0.00%
Sr-90	1.00E-03	5.50E-09	0.00%
Tc-97	4.25E-02	5.53E-09	0.00%
Tc-99	8.50E-03	4.10E-06	0.00%
Th-228	6.60E-04	7.92E-05	0.01%
Th-232	2.32E-05	4.20E-06	0.00%
U(Nat)	4.75E-03	1.71E-04	0.03%
U-232	1.55E-08	3.72E-09	0.00%
U-233	1.00E-03	7.10E-05	0.01%
U-234	2.23E-07	1.56E-08	0.00%
U-235	7.41E-06	4.28E-07	0.00%
U-238	2.47E-04	5.56E-08	0.00%

Appendix B

Nonradioactive Hazardous Materials Characterization

DOE Order 5400.1 states that Environmental Monitoring Plans (EMP) "shall be prepared for each site, facility, or process that uses, generates, releases, or manages significant pollutants or hazardous materials" (DOE Order 5400.1, IV-2). The Facility Effluent Monitoring Plans (FEMPs) being prepared to support the EMP include the consideration of nonradioactive hazardous materials.

A listing of the chemicals used in the building is obtained using the PNNL Chemical Management System (CMS). The inventory information includes the location, chemical name, and quantity. In some cases the manufacturer and individual container quantities are also tracked. In addition, the CMS data includes the reportable quantity (RQ) of the chemical. RQs are obtained from 40 CFR 302 and are the amounts which, if released to the environment from a facility, require notification to the National Response Center. To characterize the relative hazard of the building, a summary table, Table B.1, is prepared showing those chemicals that are reported to be present in greater than RQ amounts. Table B.2 provides a list of all chemicals found in the 3720 Building which have an RQ amount.

Table B.1

CMS Reportable Quantity Inventory Listing
For: 3720-ENVIRONMENTAL SCIENCE LABORATORY
Above 100 % of Reportable Quantity

RQ Grp	Chemical Name	CAS No.	Quantity	RQ Value
QX	ACRYLYL CHLORIDE	814-68-6	1.07 LBS	1 LB
QB	SODIUM HYPOCHLORITE	7681-52-9	149.29 LBS	100 LBS

Last updated 11/30/98.
Send questions or comments to the CMS Support Team.

Table B.2
CMS Reportable Quantity Inventory Listing
For: 3720-ENVIRONMENTAL SCIENCE LABORATORY
Above 0% of Reportable Quantity

RQ Grp	Chemical Name	CAS No.	Quantity	RQ Value
QX	ACRYLYL CHLORIDE	814-68-6	1.07 LBS	1 LB
QX	ARSENIC	7440-38-2	0.22 LBS	1 LB
QX	SILVER NITRATE	7761-88-8	0.22 LBS	1 LB
QA	1,3-BUTADIENE	106-99-0	0.47 LBS	10 LBS
QA	1,4-BENZOQUINONE	106-51-4	0.22 LBS	10 LBS
QA	BENZENE	71-43-2	0.10 LBS	10 LBS
QA	CADMIUM	7440-43-9	0.22 LBS	10 LBS
QA	CALCIUM HYPOCHLORITE, DRY, INCLUDING MIX 7778-54-3 0.55 LBS	10 LBS		
QA	CHROMIUM (VI) OXIDE	1333-82-0	0.66 LBS	10 LBS
QA	CUPRIC SULFATE	7758-98-7	0.22 LBS	10 LBS
QA	LEAD	7439-92-1	0.77 LBS	10 LBS
QA	SODIUM	7440-23-5	0.47 LBS	10 LBS
QB	1,4-DIETHYLENE DIOXIDE	123-91-1	9.01 LBS	100 LBS
QB	AMMONIA	7664-41-7	3.00 LBS	100 LBS
QB	DIMETHYLFORMAMIDE	68-12-2	5.82 LBS	100 LBS
QB	ETHYL ETHER	60-29-7	16.70 LBS	100 LBS
QB	ETHYLENE DICHLORIDE	107-06-2	1.38 LBS	100 LBS
QB	HYDROFLUORIC ACID		2.58 LBS	100 LBS
QB	NICKEL	7440-02-0	0.22 LBS	100 LBS
QB	POTASSIUM PERMANGANTE	7722-64-7	0.25 LBS	100 LBS
QB	SELENIUM	7782-49-2	0.22 LBS	100 LBS
QB	SODIUM HYPOCHLORITE	7681-52-9 L	149.29 LBS	100 LBS
QB	SODIUM NITRITE	7632-00-0 S	26.43 LBS	100 LBS
QB	TRICHLOROETHYLENE	79-01-6	2.20 LBS	100 LBS
QB	URANYL NITRATE HEXAHYDRATE	13520-83-7	0.13 LBS	100 LBS
QB	XYLENE	1330-20-7	0.90 LBS	100 LBS
QC	AMMONIUM HYDROXIDE	1336-21-6	3.29 LBS	1000 LBS
QC	CYCLOHEXANE	110-82-7	31.68 LBS	1000 LBS
QC	FERRIC NITRATE CRYSTALLINE AR GRADE 10421-48-4	0.00 LBS	1000 LBS	
QC	FERRIC SULFATE	10028-22-5	1.10 LBS	1000 LBS
QC	GLYCOL ETHER	110-80-5	1.32 LBS	1000 LBS
QC	HYDROGEN PEROXIDE	7722-84-1	1.92 LBS	1000 LBS
QC	IRON(II) SULFATE	7720-78-7	2.20 LBS	1000 LBS
QC	IRON(III) CHLORIDE	7705-08-0	1.00 LBS	1000 LBS
QC	METHYLENE CHLORIDE	75-09-2	43.77 LBS	1000 LBS
QC	NITRIC ACID	7697-37-2	20.10 LBS	1000 LBS
QC	PARAFORMALDEHYDE	30525-89-4	1.10 LBS	1000 LBS
QC	PHENOL	108-95-2	0.48 LBS	1000 LBS
QC	SODIUM HYDROXIDE	1310-73-2 S	47.59 LBS	1000 LBS
QC	STYRENE	100-42-5	2.00 LBS	1000 LBS
QC	TETRAHYDROFURAN	109-99-9	9.75 LBS	1000 LBS
QC	TOLUENE	108-88-3	7.91 LBS	1000 LBS

Table B.2
CMS Reportable Quantity Inventory Listing
For: 3720-ENVIRONMENTAL SCIENCE LABORATORY
Above 0% of Reportable Quantity

QD	ACETIC ACID	64-19-7	6.94 LBS	5000 LBS
QD	ACETONE	67-64-1	50.26 LBS	5000 LBS
QD	ACETONITRILE	75-05-8	3.81 LBS	5000 LBS
QD	ACRYLAMIDE	79-06-1	0.96 LBS	5000 LBS
QD	ACRYLIC ACID	79-10-7	2.20 LBS	5000 LBS
QD	ALUMINUM SULPHATE	10043-01-3	1.32 LBS	5000 LBS
QD	AMMONIUM ACETATE	631-61-8	1.10 LBS	5000 LBS
QD	AMMONIUM CHLORIDE	12125-02-9	1.18 LBS	5000 LBS
QD	AMMONIUM CITRATE, DIBASIC	3012-65-5	1.00 LBS	5000 LBS
QD	CHROMIUM	7440-47-3	0.22 LBS	5000 LBS
QD	COPPER	7440-50-8	1.44 LBS	5000 LBS
QD	DIMETHYL PHTHALATE	131-11-3	2.18 LBS	5000 LBS
QD	ETHYL ACETATE	141-78-6	0.94 LBS	5000 LBS
QD	ETHYLENE GLYCOL	107-21-1	0.03 LBS	5000 LBS
QD	HEXANE	110-54-3	13.09 LBS	5000 LBS
QD	HYDROCHLORIC ACID		41.65 LBS	5000 LBS
QD	MALEIC ANHYDRIDE	108-31-6	2.20 LBS	5000 LBS
QD	METHYL ALCOHOL	67-56-1	29.55 LBS	5000 LBS
QD	METHYL ETHYL KETONE	78-93-3	6.71 LBS	5000 LBS

Last updated 11/30/98.
Send questions or comments to the CMS Support Team.

Appendix C

Supporting Calculations

Facility	Emission Point	Sampler Flow, CFM	Stack Flow CFM	Detectable Release Alpha, Ci	Detectable Release Beta, Ci	Penetration Efficiency	Transp. Factor
3720	EP-3720-01-S	3.4	22,400	2.33E-07	8.86E-06	95 - 117	0.95
3720	EP-3720-02-S	1.5	2496	1.10E-07	4.17E-06	51 - 101	0.51
3720	EP-3720-03-S	2	7700	1.47E-07	5.59E-06	88 - 100	0.88

MDA alpha	1	pCi/sample
MDA beta	38	pCi/sample
Yr Fraction	0.04	2 wk sample
Lab Corr Factor	0.85	
Op Factor	1	
Transp. Factor	as given	
Media Factor	0.91	

Detectable Release = (MDA / Yr fraction) x (stack flow/sample flow) x 1E-12
Lab Corr. factor x Op. Factor x Transport Factor x Media Factor

3720-01-S (Main Stack)

	Particles	Composite Samples
Lab Corr Factor	0.85	1
Op Factor	1	1
Media Factor	0.91	0.91
Sampler Flow	3.40 cfm	3.40 cfm
Stack Flow	22,400 cfm	22,400 cfm
Transp. Factor	0.95	0.95

Detectable Release = (MDA / Yr fraction) x (stack flow/sample flow) x 1E-12
Lab Corr. factor x Op. Factor x Transport Factor x Media Factor

Radionuclide	MDA (pCi/sample)	Detectable Annual Release (Ci)	Unit Dose mrem/yr/Ci	Emission for 0.01 mrem/yr (Ci)	Yr Fraction	
Beta Activity	38	8.9E-06	4.9	2.0E-03	3.85E-02	2 wk sample
Alpha Activity	1	2.3E-07	180	5.6E-05	3.85E-02	2 wk sample
Sr-90	38	5.8E-07	4.9	2.0E-03	5.00E-01	6 mo. Sample
Cs-137	38	5.8E-07	4.9	2.0E-03	5.00E-01	6 mo. Sample
Am-241	0.7	1.1E-08	290	3.4E-05	5.00E-01	6 mo. Sample
Am-243	0.7	1.1E-08	290	3.4E-05	5.00E-01	6 mo. Sample
Pu-238	1	1.5E-08	180	5.6E-05	5.00E-01	6 mo. Sample
Pu-239/240	1	1.5E-08	200	5.0E-05	5.00E-01	6 mo. Sample
Pu-241	1	1.5E-08	3.2	3.1E-03	5.00E-01	6 mo. Sample

Minimum Dectectable Concentrations

MDC = MDA * 1E-12
Lab Corr. factor x Transport Factor x Media Factor x sampler flow x time

Emission Point	Sampler Flow, CFM	Sampler Flow, cm3/min	MDC alpha Ci/cm3	MDC alpha uCi/cm3	MDC beta Ci/cm3	MDC beta uCi/cm3
EP-3720-01-S	3.4	96277.8	7.01E-22	7.01E-16	2.66E-20	2.66E-14
EP-3720-02-S	1.5	42475.5	2.96E-21	2.96E-15	1.12E-19	1.12E-13
EP-3720-03-S	2	56634	1.29E-21	1.29E-15	4.89E-20	4.89E-14

2 weeks = 20160 minutes

This page intentionally left blank.

Appendix D

Ventilation System Flow Pathways

This page intentionally left blank.

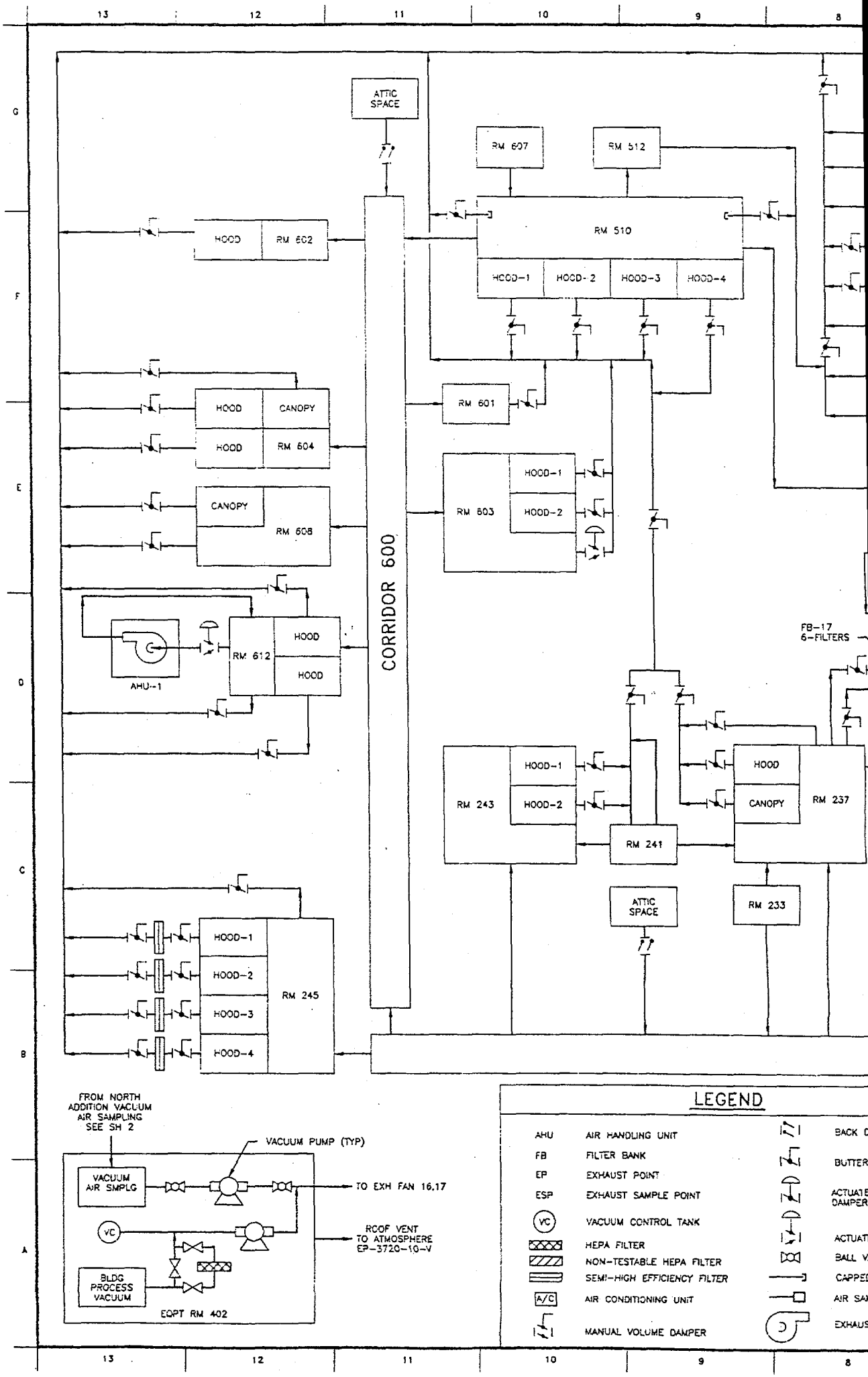
ATTIC SPACE
RM 607
RM 512
RM 510
HOOD-1
HOOD-2
HOOD-3
HOOD-4
HOOD
RM 602
HOOD
CANOPY
HOOD
RM 604
CANOPY
RM 608
RM 601
RM 603
HOOD-1
HOOD-2
CORRIDOR 600
AHU-1
RM 612
HOOD
HOOD
FB-17
6-FILTERS
RM 243
HOOD-1
HOOD-2
RM 241
HOOD
CANOPY
RM 237
ATTIC SPACE
RM 233
HOOD-1
HOOD-2
HOOD-3
HOOD-4
RM 245
FROM NORTH ADDITION VACUUM AIR SAMPLING SEE SH 2
VACUUM PUMP (TYP)
VACUUM AIR SMPLG
TO EXH FAN 16.17
VC
ROOF VENT TO ATMOSPHERE EP-3720-10-V
BLDG PROCESS VACUUM
EQPT RM 402
LEGEND
AHU AIR HANDLING UNIT
FB FILTER BANK
EP EXHAUST POINT
ESP EXHAUST SAMPLE POINT
VC VACUUM CONTROL TANK
HEPA FILTER
NON-TESTABLE HEPA FILTER
SEMI-HIGH EFFICIENCY FILTER
A/C AIR CONDITIONING UNIT
MANUAL VOLUME DAMPER
BACK D
BUTTER
ACTUATE DAMPER
ACTUAT
BALL V
CAPPED
AIR SA
EXHAUS

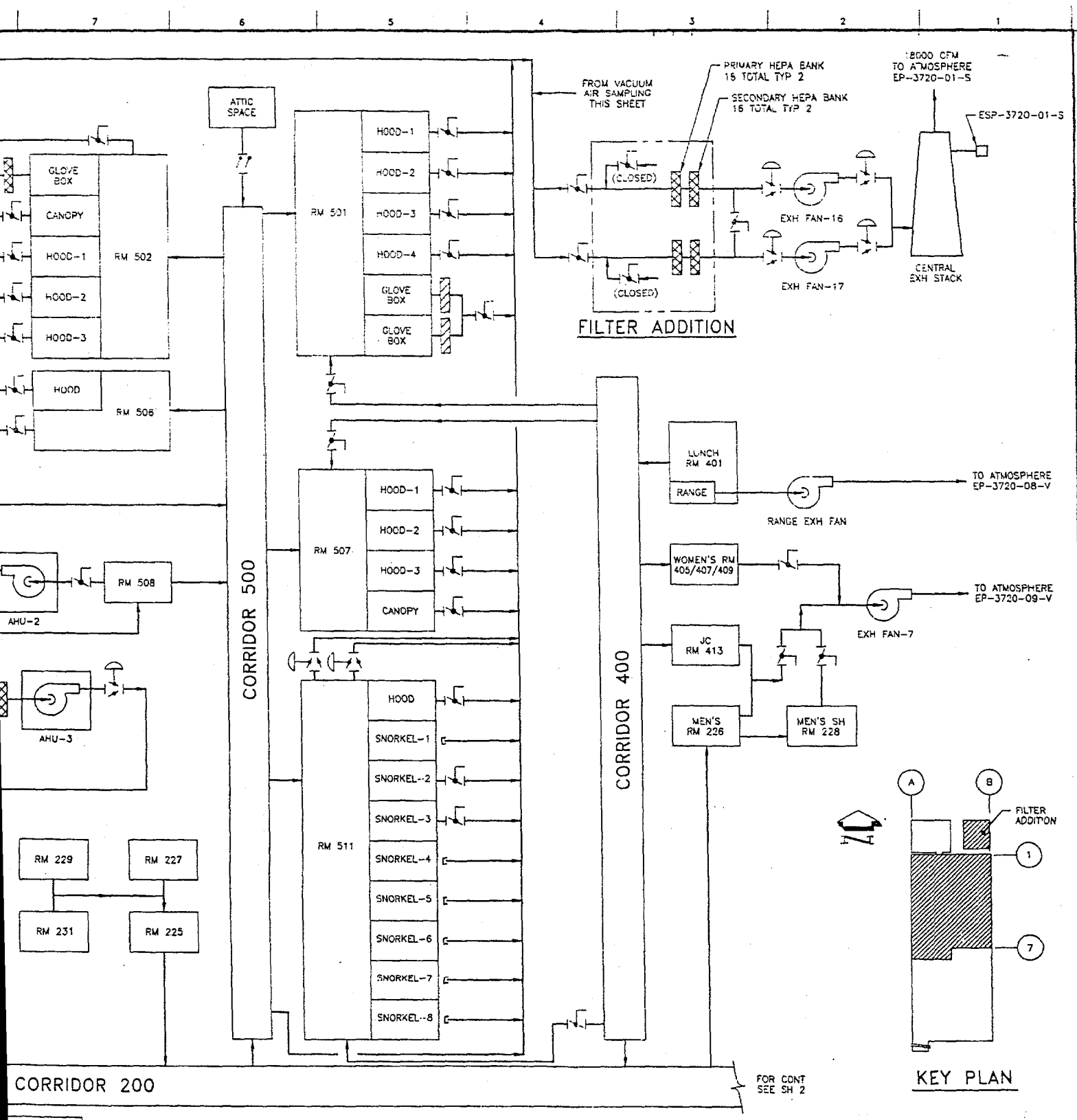

H-3-57948	0	PIPING PLAN SECT & DET	
H-3-54536	2	REV TO EXH SYS	
H-3-54535	2	HVAC SYS FL PLAN	
H-3-54534	2	HVAC & PLMB REV & SCHED	
H-3-34308	2	HVAC EXH SECT & DET	
H-3-34307	3	EXH SYS PLAN SECT & DET	
H-3-34306	1	CENTRAL EXH ATTIC PLAN	
H-3-34304	2	HVAC FLOW & CONT DWG	
H-3-34175	5	PROCESS PIPE PLAN & SECT	
H-3-34173	4	HVAC PLAN AND SECTIONS	
H-3-34172	2	HVAC FLOW & CONT DIAGS	
H-3-21375	1	EQPT SCHEDULE	
H-3-21368	2	ROOF PLAN MECH	
H-3-21367	6	HVAC FL PLAN SW	
H-3-21366	5	HVAC FL PLAN SE	
H-3-21365	7	HVAC FL PLAN NW	
H-3-21364	8	HVAC FL PLAN NE	
DRAWING NO	REV NO	DRAWING TITLE	

REFERENCE DRAWINGS

NEXT USED ON

REV		DA	APVD BY	CHK BY	REV BY	DESCRIPTION	REV NO
RR		VN 7/22/94	JWL 7/20/94	SDB 7/21/94	JES 8/17/94	FMP02 AND AS FOUND CONDITION REVISED PER D00374-EDP01-	6
RR	M	VN 7/22/94	JWL 7/20/94	SDB 7/21/94	JES 8/17/94	ECN03 PER D00163-EDP01R1-FMP00- a)RMV PREVIOUS REVS b)GEN REV	5
RR	MF	DA DATE	APVD BY DATE	CHK BY DATE	REV BY DATE	DESCRIPTION	REV NO

REVISIONS

CADCODE 3D:IBM:ACD2:13:SS CADFILE C070231A

EDP # 90-164

DRAWN JE SANDBERG DATE 2/25/91
CHECKED DJ YEAGER 5/28/91
DFTG APVD KJ GAITHER 5/28/91
ENGR JW LEEPER JWL
JW LEEPER 5/28/91
APVD ER GERK 5/28/91
OTHER
QA CW CABLE 5/28/91
APPROVED FOR IMPLEMENTATION BY JW LEEPER FOR PNL DATE 5/28/91

U. S. DEPARTMENT OF ENERGY
RICHLAND OPERATIONS OFFICE
PACIFIC NORTHWEST LABORATORY
OPERATED BY BATTELLE MEMORIAL INSTITUTE

EXHAUST FLOW DIAGRAM FIRST FLOOR NORTH

EFFLUENT SYSTEM DIAGRAMS

SIZE F | INDEX NO 7001 8900 | BLDG NO 3720 | DWG NO H-3-70231 | REV NO 6

SCALE NONE | SHEET 1 OF 3

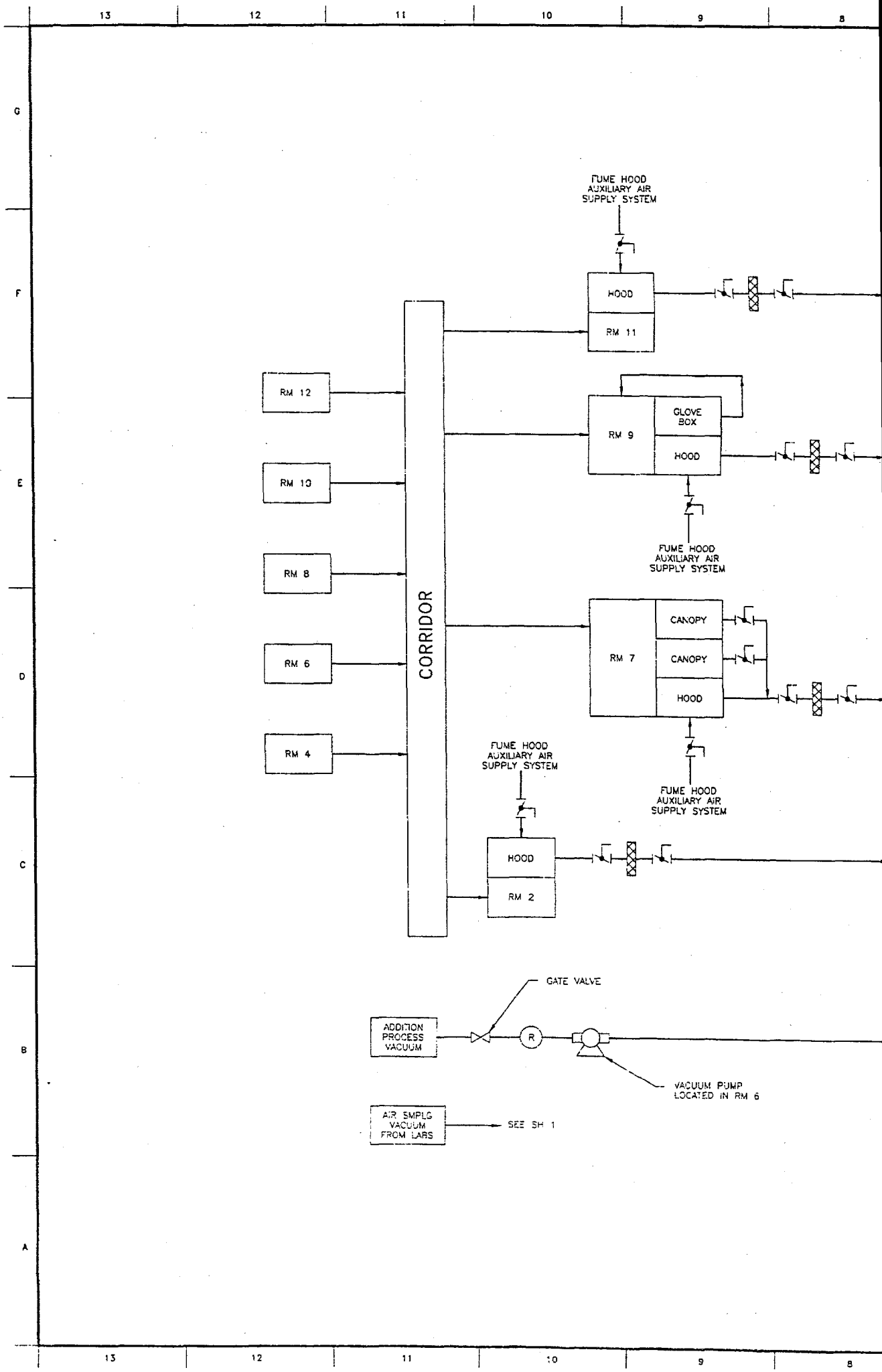
FUME HOOD AUXILIARY AIR SUPPLY SYSTEM
HOOD
RM 11
RM 12
RM 9
GLOVE BOX
HOOD
RM 10
FUME HOOD AUXILIARY AIR SUPPLY SYSTEM
RM 8
CORRIDOR
RM 7
CANOPY
CANOPY
HOOD
RM 6
RM 4
FUME HOOD AUXILIARY AIR SUPPLY SYSTEM
FUME HOOD AUXILIARY AIR SUPPLY SYSTEM
HOOD
RM 2
GATE VALVE
ADDITION PROCESS VACUUM
R
VACUUM PUMP LOCATED IN RM 6
AIR SMPLG VACUUM FROM LABS
SEE SH 1

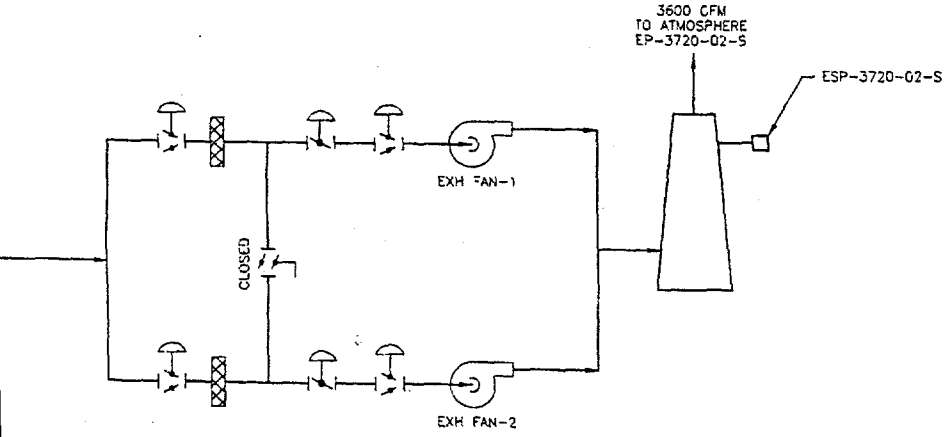

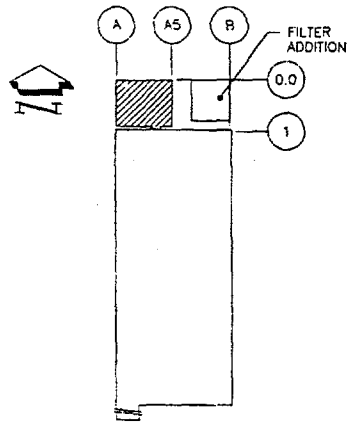

KEY PLAN

REV	BY	DATE	CHK BY	DATE	RSV BY	DATE	DESCRIPTION	REV NO
RR							PLAN ADDED FILTER ADDITION TO KEY	2
RR	AGC	11/5/92	JWL	11/5/92	SDB	11/4/92	PER ECN 90-164-002 RMVD REVISION CONTROL BLOCK	1
RR	MF							

REVISIONS

DRAWING NO	REV	DRAWING TITLE

REFERENCE DRAWINGS

NEXT USED ON

CADCODE 3D:IBM:ACD2:13:SS | CADFILE CC70231B

DRAWN JE SANDBERG DATE 10/27/91
CHECKED JJ YEAGER 5/28/91
DFTG APVD KJ GAITHER 5/28/91
ENGR JW LEEPER JWL
JW LEEPER 5/28/91
APVD ER GERK 5/28/91
OTHER
QA CW CABLE 5/28/91
APPROVED FOR IMPLEMENTATION BY JW LEEPER FOR PNL DATE 5/28/91

EDP # 90-164

U. S. DEPARTMENT OF ENERGY
RICHLAND OPERATIONS OFFICE

PACIFIC NORTHWEST LABORATORY
OPERATED BY BATTELLE MEMORIAL INSTITUTE

EXHAUST FLOW DIAGRAM NORTH ADDITION

EFFLUENT SYSTEM DIAGRAMS

SIZE	INDEX NO	BLDG NO	DWG NO	REV NO
F	7001 8900	3720	H-3-70231	2

SCALE NONE | SHEET 2 OF 3

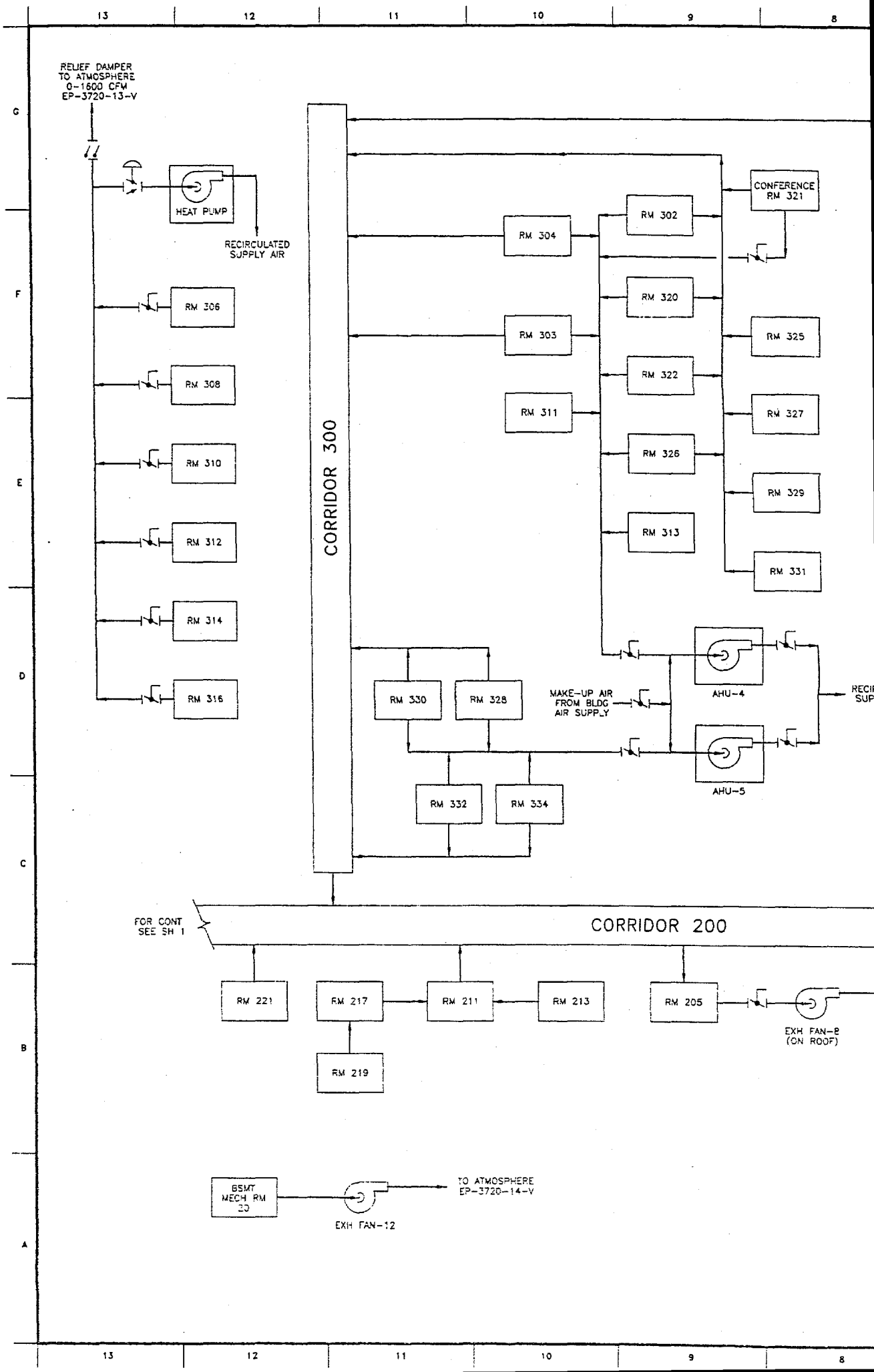
RELIEF DAMPER
TO ATMOSPHERE
0-1600 CFM
EP-3720-13-V
HEAT PUMP
RECIRCULATED
SUPPLY AIR
RM 306
RM 308
RM 310
RM 312
RM 314
RM 316
CORRIDOR 300
RM 304
RM 303
RM 311
RM 302
RM 320
RM 322
RM 326
RM 313
CONFERENCE
RM 321
RM 325
RM 327
RM 329
RM 331
RM 330
RM 328
RM 332
RM 334
MAKE-UP AIR
FROM BLDG
AIR SUPPLY
AHU-4
AHU-5
FOR CONT
SEE SH 1
CORRIDOR 200
RM 221
RM 217
RM 211
RM 213
RM 205
RM 219
EXH FAN-8
(ON ROOF)
BSMT
MECH RM
20
EXH FAN-12
TO ATMOSPHERE
EP-3720-14-V

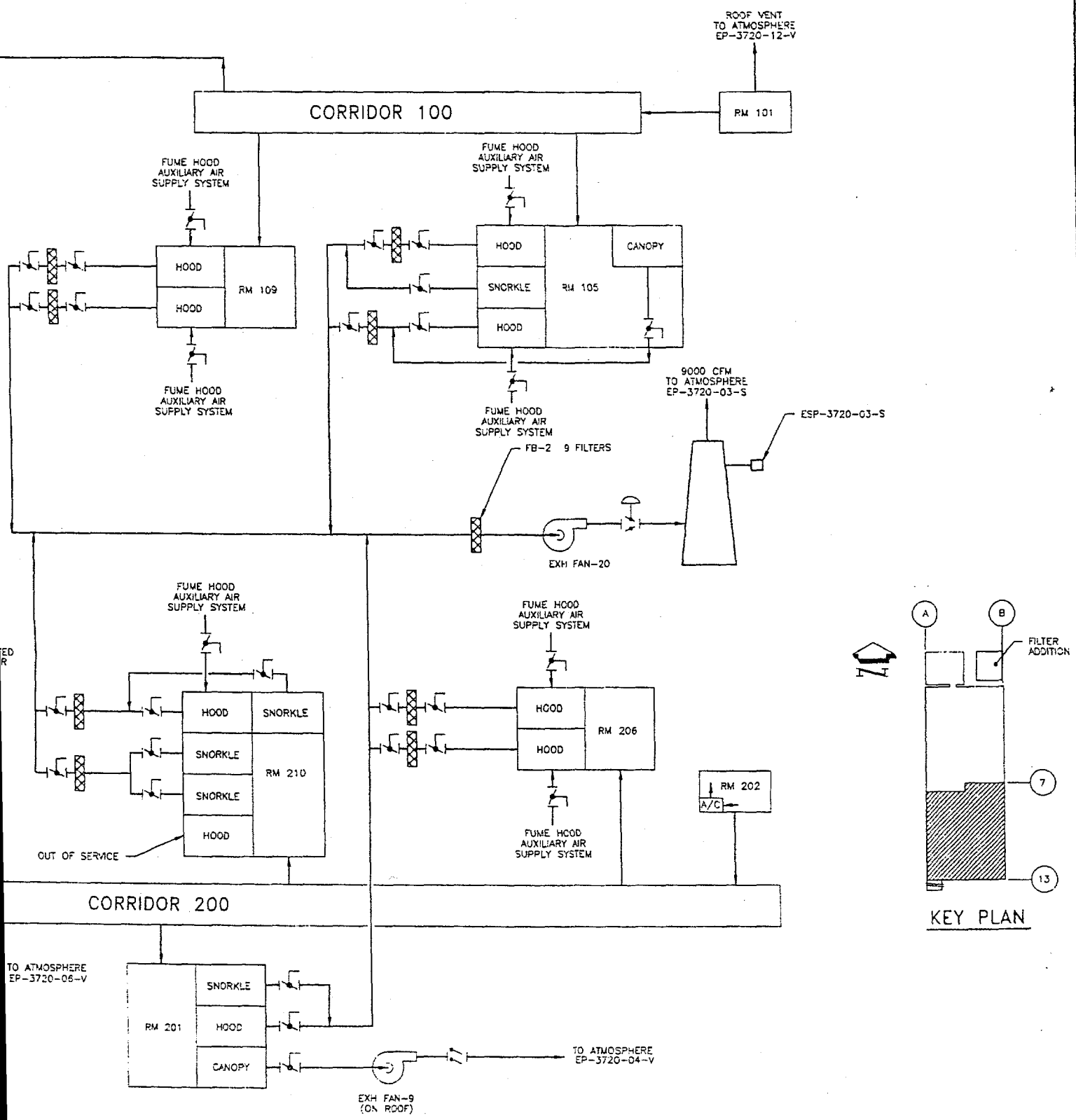

RR						FMP01 AND AS FOUND CONDITION REVISED PER DC0832-EDP01-	3
RR	M	VN 7/22/94	JWL 7/20/94	SDB 7/21/94	JES 5/17/94	ECN03 PER DC0163-EDP01R1-FMP00- REROUTE TO HOOD EXH RM 105 CANOPY EXH FAN AND DMPR AND a)RMVD DMPR RM 210 b)RMVD	2
RR		ACC 11/5/92	JWL 11/5/92	SDB 11/4/92	SVS 10/29/92	PER ECN 90-164-002 RMVD REVISION CONTROL BLOCK	1
RR	MF	CA / DATE	APVD BY / DATE	CHK BY / DATE	REV BY / DATE	DESCRIPTION	REV NO

REVISIONS

CADCODE 3D:IBM:ACD2:13:SS CADFILE C070231C

DRAWING NO	REV NO	DRAWING TITLE
REFERENCE DRAWINGS		
NEXT USED ON		

DRAWN JE SANDBERG	DATE 12/20/91	
CHECKED DJ YEAGER	5/28/94	
APTG APVD KJ GAITHER	5/28/94	
ENGR JW LEEPER	JWL 5/25/94	
JW LEEPER	5/25/94	
APVD ER GERK	5/28/94	
OTHER		
CW CABLE	5/28/94	
APPROVED FOR IMPLEMENTATION BY JW LEEPER FOR PNL	DATE 5/28/94	

EDP # 90-164

U. S. DEPARTMENT OF ENERGY
RICHLAND OPERATIONS OFFICE

PACIFIC NORTHWEST LABORATORY
OPERATED BY BATTELLE MEMORIAL INSTITUTE

EXHAUST FLOW DIAGRAM FIRST FLOOR SOUTH

EFFLUENT SYSTEM DIAGRAMS

SIZE	INDEX NO	BLDG NO	DWG NO	REV NO
F	7001 8900	3720	H-3-70231	3

SCALE NONE SHEET 3 OF 3

Distribution

No. of Copies		
OFFSITE		
1	DOE/Office of Scientific and Technical Information	
ONSITE		
3	DOE Richland Operations Office	
	MA Barnard	K8-50
	ME Burandt (2)	K8-50

No. of Copies		
20	**Pacific Northwest National Laboratory**	
	BP Atencio	P7-68
	MY Ballinger (3)	BSRC
	HL Debban	P7-73
	AK Ikenberry	P7-79
	SL Jones	P7-08
	KE McMullin	P8-50
	KD Shields (5)	P7-68
	Information Release (7)	K1-06