CONF-9510119--42

Development of a Monochromator System for the APS X-ray BESSRC Beamlines

RECEIVED
JUL 07 1997
OSTI

Mark A. Beno, Gordon S. Knapp
Materials Science Division, Argonne National Laboratory, 9700 S. Cass Avenue, Argonne, IL 60439

Mohan Ramanathan
Experimental Facilities Division, Advanced Photon Source, Argonne National Laboratory, 9700 S. Cass Avenue, Argonne, IL 60439

Materials Science Division
Argonne National Laboratory
Argonne, IL 60439

The submitted manuscript has been created by the University of Chicago as Operator of Argonne National Laboratory ("Argonne") under Contract No. W-31-109-ENG-38 with the U.S. Department of Energy. The U.S. Government retains for itself, and others acting on its behalf, a paid-up, non exclusive, irrevocable worldwide license in said article to reproduce, prepare derivative works, distribute copies to the public, and perform publicly and display publicly, by or on behalf of the Government.

MASTER

DISTRIBUTION OF THIS DOCUMENT IS UNLIMITED

March 1997

/jc

Distribution:

1-2. M. J. Masek
3. B. D. Dunlap
4. P. A. Montano
5. F. Y. Fradin
6. R. Gottschall
7. Editorial Office
8. Authors

DISCLAIMER

This report was prepared as an account of work sponsored by an agency of the United States Government. Neither the United States Government nor any agency thereof, nor any of their employees, makes any warranty, express or implied, or assumes any legal liability or responsibility for the accuracy, completeness, or usefulness of any information, apparatus, product, or process disclosed, or represents that its use would not infringe privately owned rights. Reference herein to any specific commercial product, process, or service by trade name, trademark, manufacturer, or otherwise does not necessarily constitute or imply its endorsement, recommendation, or favoring by the United States Government or any agency thereof. The views and opinions of authors expressed herein do not necessarily state or reflect those of the United States Government or any agency thereof.

Poster presented at SRI 95/APS Users Meeting, October 1995.

This work is supported by the Division of Materials Sciences, Office of Basic Energy Sciences of DOE, under contract No. W-31-109-ENG-38.

DEVELOPMENT OF A MONOCHROMATOR SYSTEM FOR THE APS X-RAY BESSRC BEAMLINES

Mark. A. Beno, Gordon. S. Knapp
Materials Science Division, Argonne National Laboratory, 9700 S. Cass Avenue, Argonne, IL 60439

Mohan Ramanathan
Experimental Facilities Division, Advanced Photon Source, Argonne National Laboratory, 9700 S. Cass Avenue, Argonne, IL 60439

ABSTRACT

We have designed a double crystal, fixed exit monochromator which allows windowless operation of the APS beamlines. The crystals are mounted on a turntable with the first crystal at the center of rotation. A mechanical linkage is used to correctly position the second crystal and maintain a constant offset. The monochromator is designed with two adjacent vacuum chambers, one containing the drive mechanism, a vacuum compatible Huber goniometer, and another chamber containing a turntable on which the monochromator linkage and crystals are mounted. The small annular opening around a hollow stainless steel shaft which connects the Huber goniometer to the turntable is the only passage between the two adjacent chambers. The design of the monochromator is such that it can accommodate water, liquid nitrogen or galium cooling for the crystal optics. The basic design for the monochromator linkage mechanism is presented along with details of the monochromator chamber. The results of initial optical tests of the monochromator system using tilt sensors and a precision autocollimator will also be given.

I. INTRODUCTION

We have designed a double crystal, fixed exit monochromator with a constant offset for UHV operation[1], thereby allowing windowless operation of the beamlines. A mechanical linkage is used to correctly position the second crystal and maintain a constant offset. The crystals are mounted on a turntable with the first crystal at the center of rotation. The main drive for the rotary motion is provided by a vacuum compatible Huber goniometer isolated from the main vacuum chamber. Rotary motion of the primary monochromator stage is accomplished by using two adjacent vacuum chambers linked only by the small annular opening around a hollow stainless steel shaft which connects the Huber goniometer to the turntable on which the crystals are mounted. This design allows high vacuum operation of the monochromator since it is possible to maintain 10^{-9} Torr on the monochromator side while maintaining only 10^{-6} Torr in the goniometer vacuum chamber. The central shaft also allows for passage of crystal cooling and electrical lines from UHV chamber to the low vacuum side and then into the atmosphere. The design of the monochromator is such that it can accommodate both water and liquid nitrogen cooling for the crystal optics.

II. REQUIREMENTS

The monochromator is required to cover the range of energies from 2.4 to 50 keV. This can be accomplishedwith Si **111** and **220** crystals by allowing an angular rotation range of 5 to 55 degrees in theta. Due to the low energy limit, the monochromator must be UHV compatible, allowing windowless operation. The exit height of the beam (35 mm) has to be fixed for the whole range of energy, i.e. the monochromator has to be a fixed offset type. The monochromator should be capable of scanning operation over a range of at least 1000 eV without a external feedback system to maintain the parallelism of the two crystals. The monochromator should be able to handle the high heat loads present at the APS beam lines. Lastly the monochromator design should allow the installation of saggital focusing for the second crystal.

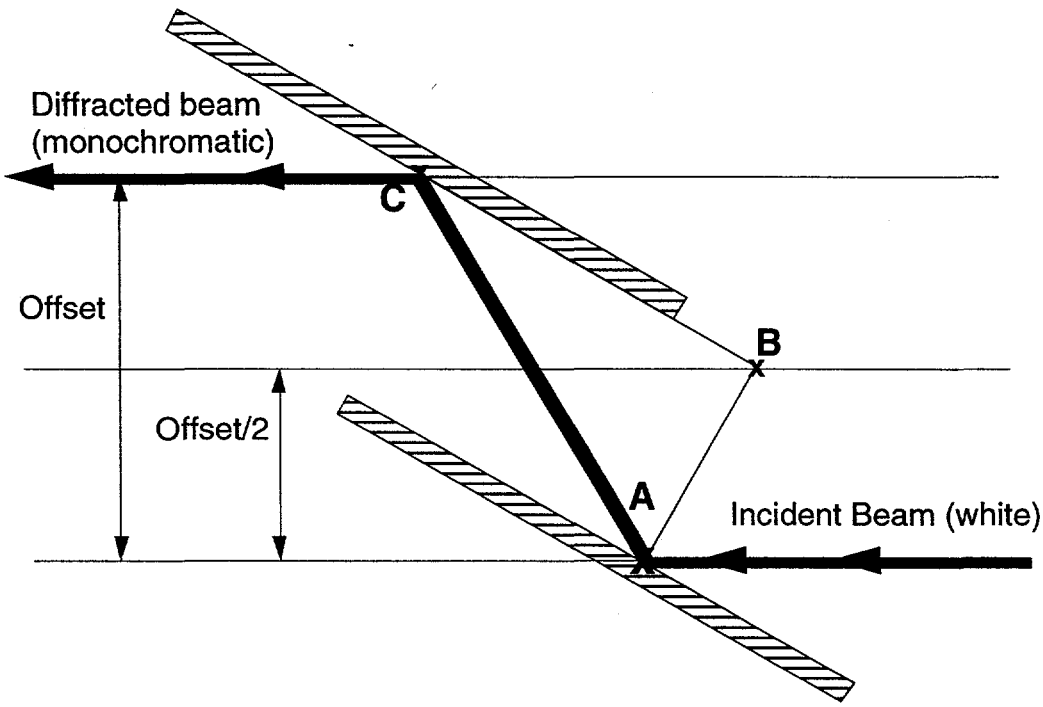

Figure 1 Geometrical representation of the BESSRC double-crystal fixed exit monochromator. The right triangle ABC is built of two precision slides. This linkage not only keeps the crystals parallel but produces a constant offset of the incident and diffracted beams.

III. DESIGN

Based on these specifications we have designed a Bragg-Bragg geometry double crystal monochromator system . Figure 1 shows a geometrical representation of the two crystal monochromator scheme. The design consists of two matching perfect crystals mechanically linked by way of two slides mounted orthogonal to each other (a Cowan-Golovchenko linkage[2,3]). Energy tuning is achieved by a single rotary drive mechanism with the center of rotation at the first crystal (point A in fig. 1).

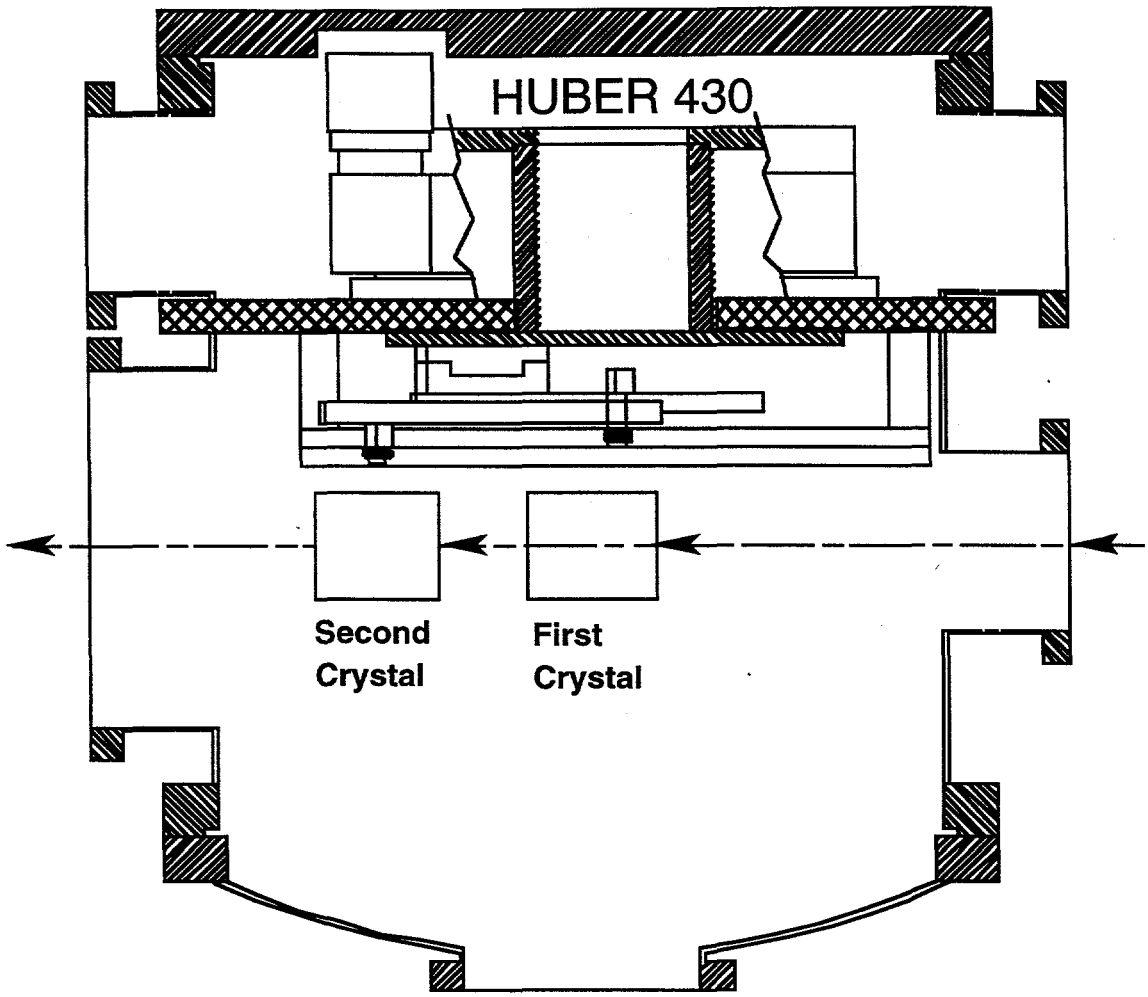

Figure 2. Top view of the BESSRC monochromator chamber. The chamber closest to the wall (at the top of the figure) contains the rotary table which drives the first crystal rotation. The larger chamber (bottom of the figure) contains the monochromator linkage mechanism, crystal mounts and crystals. This arrangement allows easy access to the crystals without disturbing the monochromator alignment.

Figures 2 shows a top front view of the monochromator system. The whole vacuum chamber is only 24 inches in diameter and has 27 inch OD wire sealed UHV flanges. The chamber will be mounted on a kinematic mount table shown in figure 3. A 220 l/s Ion pump will be used to pump the monochromator side and a 170 l/s ion pump for the Huber goniometer side. During initial pumping both the chambers will be pumped simultaneously by a single turbo pump. Once the ion pumps are started the two sides will be vacuum isolated.

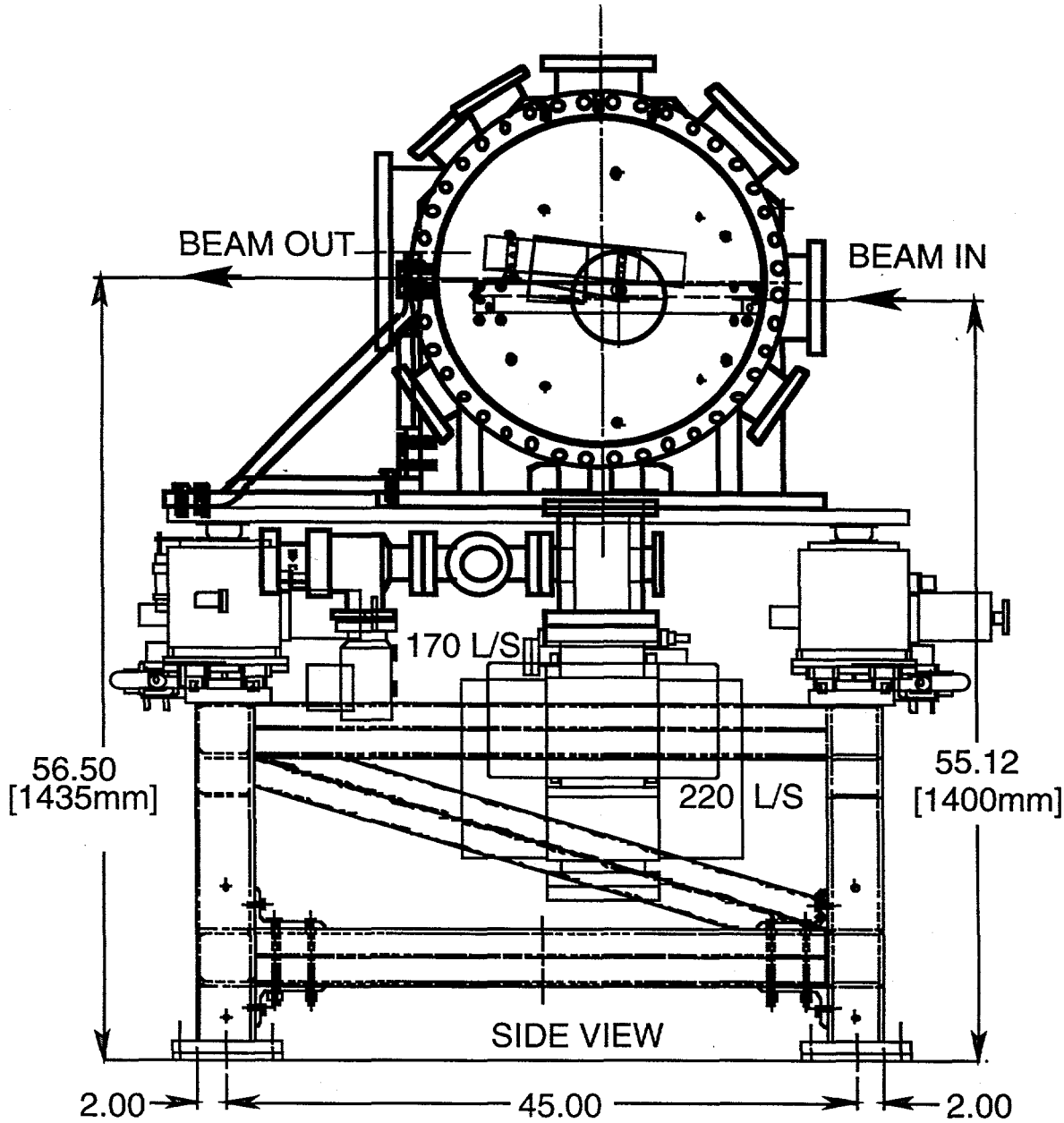

Figure 3 A front view of the BESSRC monochromator mounted on a kinematics table. The 170 and 220 l/sec. ion pumps are used on the rotary drive and monochromator chambers respectively. The monochromator chamber ion pump also has a NEG insert for additional pumping.

IV. RESULTS

Initial tests of the monochromator linkage mechanism are presently underway. The parallel alignment of two mirrors mounted at the first and second crystal positions was examined using both tilt sensors and a highly accurate autocollimator. Figure 4 shows a representative result for the monochromator equipped with the initial set of crossed roller bearing slides. The deviation from parallel alignment of the two crystals is approximately 200 μrad for the slides used for these initial experiments .

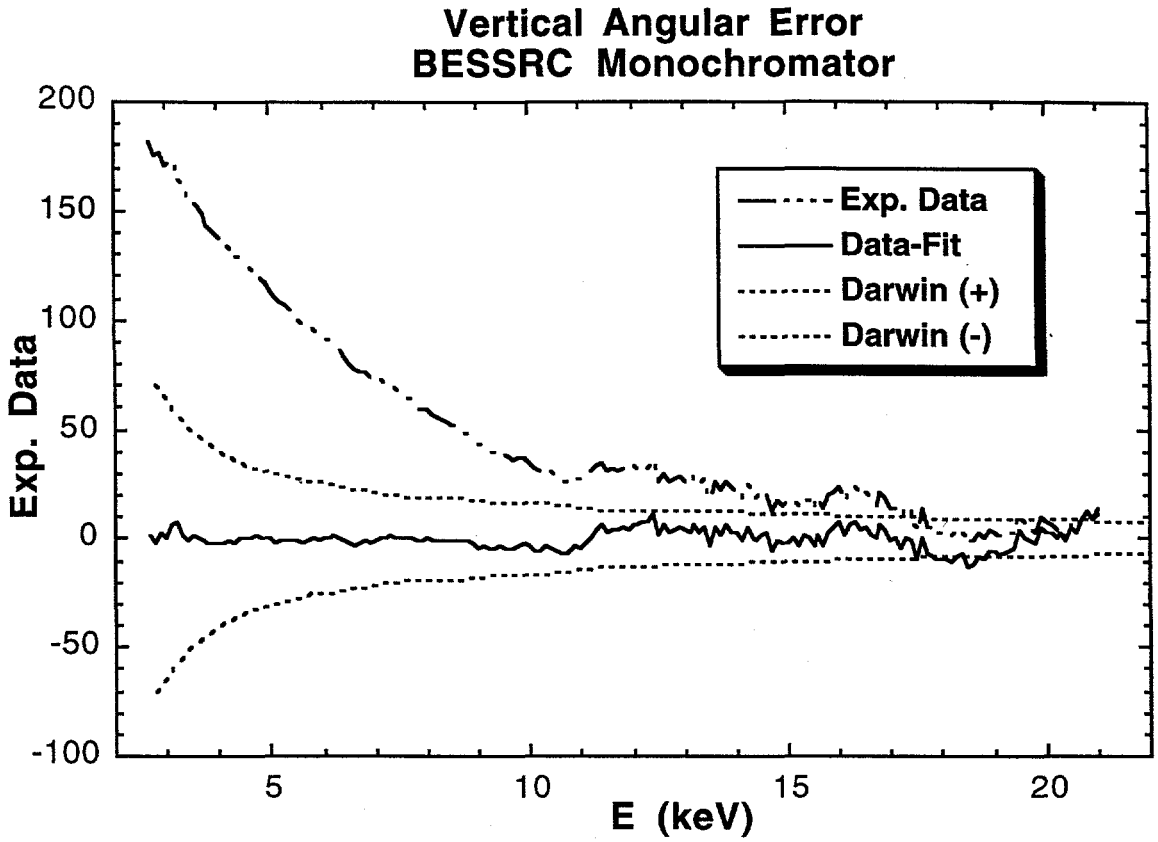

Figure 4 The vertical angular deviation for a representative test of the parallel alignment of two mirrors located at the first and second crystal positions. The raw experimental data is shown along with the difference between the raw data and a polynomial fit. The later stays within the Darwin width up to ~17 keV.

It should be possible to correct for much of this deviation since it is extremely reproducible, as can be seen from the repeated scans shown in Figure 5. The results at high energies (above 17 keV) and response of the system to weighting both indicate that there are problems at the low angle end of the mechanism . Other optical techniques used to test the fixed exit mechanism indicate that the fixed exit operation of the monochromator mechanism is also problematic at high energies. Both problems may be related to bending of the light weight second slide originally used. An autocollimator test of this slide alone indicates that much of the error shown in the figures is the result of deviations present in the dismounted slide and not a result of the linkage mechanism.

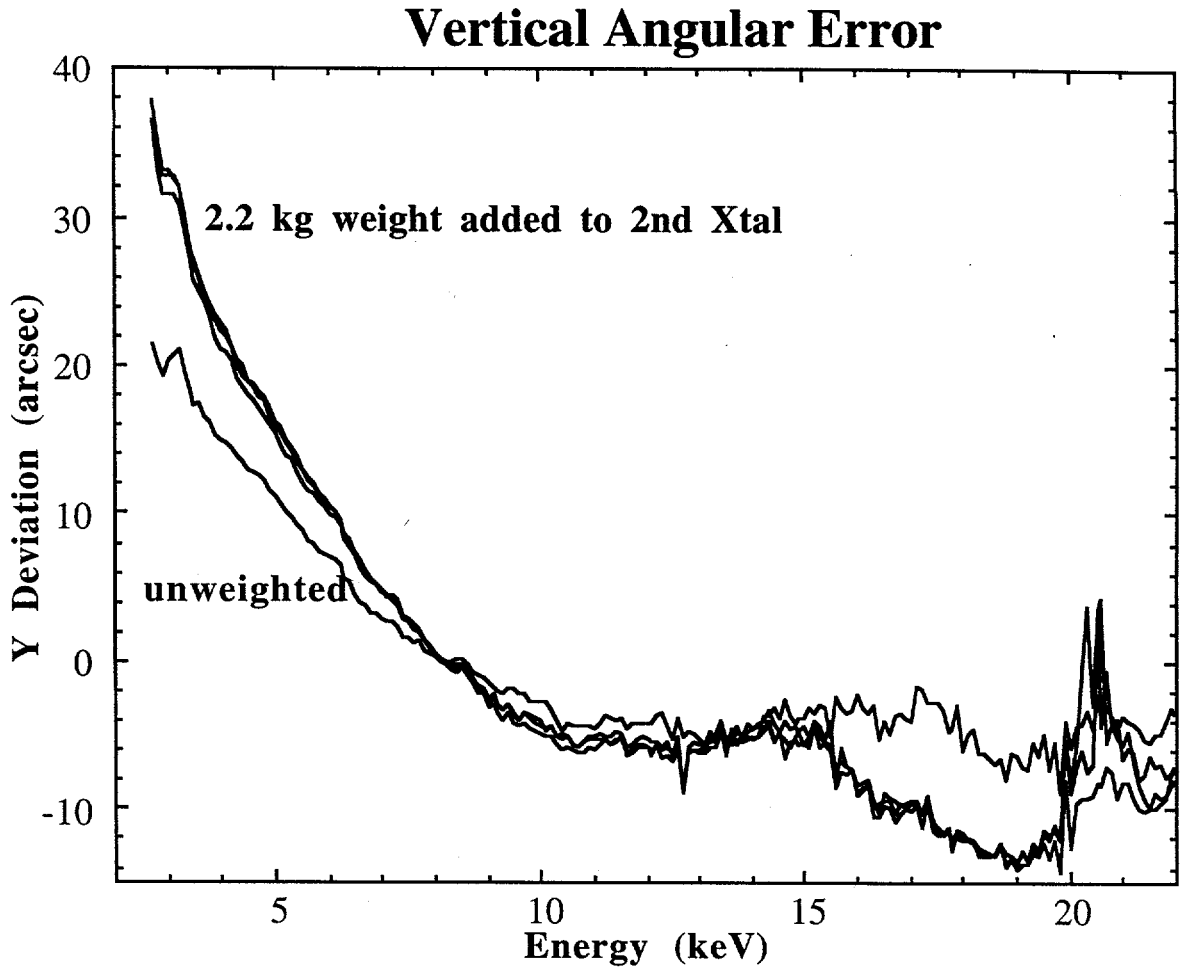

Figure 4 The vertical angular deviation for the parallel alignment of two mirrors located at the first and second crystal positions and the results for repeated runs with a 2.2 kg weight added to the 2nd crystal mount. The deviations increase when the 2nd crystal mount is loaded. The multiple runs show that the monochromator system is very reproducible. Either data set could be corrected (with a feedback system) to stays within the Darwin width up to ~20 keV.

ACKNOWLEDGMENTS

Work at Argonne National Laboratory is supported by the US Department of Energy (DOE), Office of Basic Energy Sciences, Division of Material Sciences, under contract W-31-109-ENG-38.

REFERENCES

1. M. Ramanathan, M. A. Beno, G. S. Knapp, G. Jennings, P. L. Cowan, and P. A. Montano, Rev. Sci. Instr., , **66**(1995) 2191.
2. J. A. Golovchenko, R. A. Levesque, and P. L. Cowan, Rev. Sci. Instr. **51** (1981) 509.
3. P. L. Cowan, J. B. Hastings, T. Jach and J. P. Kirkland, Nucl. Instr. and Meth. **208** (1983) 349.

DISCLAIMER

Portions of this document may be illegible in electronic image products. Images are produced from the best available original document.