LA-UR-74-1434

Conf-740957--4

TITLE: 10 kA, 300 kJ MAGNETIC ENERGY TRANSFER AND STORAGE (METS) TEST FACILITY

MASTER

AUTHOR(S): C. E. Swannack, D. J. Blevins, C. R. Harder, J. D. G. Lindsay, J. D. Rogers, and D. M. Weldon

SUBMITTED TO: Applied Superconductivity Conference, Oakbrook, Illinois, September 30-October 2, 1974.

By acceptance of this article for publication, the publisher recognizes the Government's (license) rights in any copyright and the Government and its authorized representatives have unrestricted right to reproduce in whole or in part said article under any copyright secured by the publisher.

The Los Alamos Scientific Laboratory requests that the publisher identify this article as work performed under the auspices of the U. S. Atomic Energy Commission.

los alamos
scientific laboratory
of the University of California
LOS ALAMOS, NEW MEXICO 87544

NOTICE

This report was prepared as an account of work sponsored by the United States Government. Neither the United States nor the United States Atomic Energy Commission, nor any of their employees, nor any of their contractors, subcontractors, or their employees, makes any warranty, express or implied, or assumes any legal liability or responsibility for the accuracy, completeness or usefulness of any information, apparatus, product or process disclosed, or represents that its use would not infringe privately owned rights.

DISTRIBUTION OF THIS DOCUMENT IS UNLIMITED

Form No. 836
St. No. 2629
1/73

UNITED STATES
ATOMIC ENERGY COMMISSION
CONTRACT W-7405-ENG. 36

10 kA, 300 kJ MAGNETIC ENERGY TRANSFER AND STORAGE (METS) TEST FACILITY*

C. E. Swannack, D. J. Blevins, C. R. Harder, J. D. G. Lindsay, J. D. Rogers, and D. M. Weldon+

ABSTRACT

The theta-pinch fusion test reactor proposed within the controlled thermonuclear research program at the Los Alamos Scientific Laboratory will demand that approximately 250 MJ be delivered into the plasma compression coil in one millisecond at a repetition rate of four per hour. Multiple modules of superconducting inductive storage will supply this pulsed energy.

A Magnetic Energy Transfer and Storage (METS) facility has been constructed to test low-loss superconducting inductive energy storage modules, superconducting switches, and developmental high voltage circuit breakers. The storage module has been tested to 12.5 kA with 386 kJ stored energy.

I. INTRODUCTION

The pulsed θ-pinch fusion test reactor (FTR) proposed within the controlled thermonuclear research program at the Los Alamos Scientific Laboratory requires an energy of approximately 250 MJ for plasma compression. The present Scyllac θ-pinch experiment uses high voltage capacitors to provide both the shock heating in the first 0.25 μs and adiabatic compression in the following 4 μs. The shock heating energy is only a few percent of that required for the plasma compression. The FTR will have the low energy, fast shock heating function (which requires expensive, high voltage capacitors) separated from the high energy, slow adiabatic compression system.

Superconducting magnetic energy storage is being developed at Los Alamos as an efficient, high energy density, pulsed power source for the immediate requirements within the CTR program. The future pulsed θ-pinch reactor power station will require compression energy of approximately 50 GJ injected in a time of 10 - 20 ms. Superconducting magnetic energy storage and inertial energy storage appear to be the most promising options at these high energy levels where energy transfer and recovery efficiencies must be high to reduce the plant capital investment.

II. FUSION TEST REACTOR METS SYSTEM

The FTR is intended to demonstrate energy break-even conditions within the plasma, not to produce net power. At least initially no attempt will be made to recover the compression magnetic energy following transfer from the superconducting inductive storage. However, the transfer system must be efficient to minimize the cost of extra energy storage beyond that required by the plasma compression coil load. Capacitive reactance is inserted into the transfer circuit between the storage coil and compression coil modules to permit total energy transfer except for the normal resistive losses in switches and cabling.

The METS electrical circuit is described schematically in Fig. 1. The system is modularized into sections of definite size whose voltage and current parameters fall within acceptable bounds of technology and which are compatible with the characteristic dynamic plasma wavelength. During the transfer cycle the system voltage and component current waveforms within a typical repetition module are:

System voltage	$V =$	$V_o \sin \omega t$
Storage coil current	$I = 0.5$	$I_o (1 + \cos \omega t)$
Compression coil current	$I = 0.5$	$I_o (1 - \cos \omega t)$
Transfer capacitor current	$I =$	$I_o \cos \omega t$

The angular frequency $\omega = \frac{\pi}{1 \text{ ms}} = (2/LC)^{1/2}$,

where the storage coil inductance L is matched to the compression coil. The transfer time is $\tau = \pi/\omega = 1$ ms. A simple relationship,

$$E_{stored} = I_o V_o \tau/\pi,$$

is derived for the storage module which sets the maximum size of the module by the transfer time, an acceptable value of current in the superconducting winding, and a tolerable high voltage level during the transfer pulse. Values of 25 kA and 60 kV which appear achievable within the FTR time schedule set an upper limit of 475 kJ per storage module. The total system will contain approximately 600 of these units.

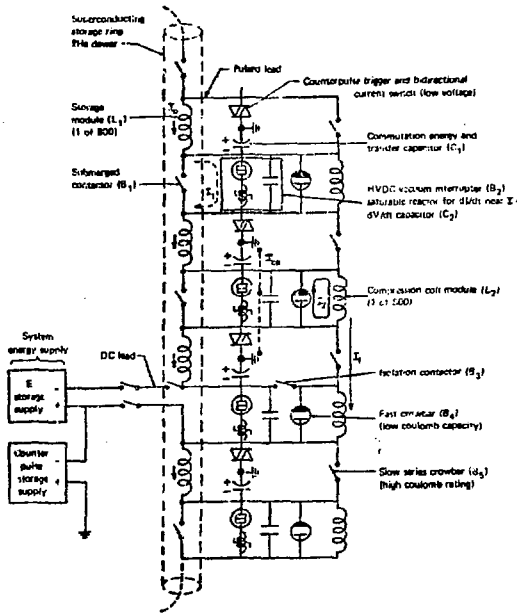

Fig. 1. METS-FTR Circuit. 250 MJ is delivered to the plasma compression coil at a peak power of 1 TW.

A typical operational cycle of the METS-FTR system begins by opening all switches, closing the in-line contactors submerged within the cryogenic system, and connecting the main charging supplies. Current is ramped to 25 kA in the storage coil in 300 s, while the whole system is raised off ground potential to -5 kV to reverse charge the transfer capacitors for commutating the arc currents in the transfer switches. When peak current is reached, the breakers which parallel the submerged contactors are closed and the contactors are opened, transferring the current to the outside breakers through the pulsed current leads. These breakers are mechanically opened and the commutation switches are closed, forcing reverse current through the breakers, extinguishing the arcs and electrically opening the breakers. The storage current then transfers to the

Manuscript received September 30, 1974.

*Work performed under the auspices of the USAEC.

+Los Alamos Scientific Laboratory of the University of California, Los Alamos, New Mexico 87544.

capacitor and compression coil. One millisecond later the storage coil current has dropped to zero, and the current has peaked in the compression coil and reverse peaked in the transfer capacitor. The current is crowbarred in the compression coil at this time be shorting across the capacitors and dissipated by the characteristic L/R decay time of the compression coil circuit.

This system is most efficient in terms of energy transfer, main source charging power and cryogenic system heat load. Our program is keyed to development of the three critical components - a low-loss pulsed superconducting energy storage coil, a high current cryogenic contactor with resistance near 10 $\eta\Omega$, and a reliable high voltage dc current interrupter. Superconducting switches are being developed[1] as an alternative to the cryogenic contactor and current interrupter components to assure an operational system on the time schedule of the FTR program.

III. PROTOTYPE TEST FACILITIES

Tests are proceeding through three levels of development whose parameters are outlined in Table 1. Level 1 tests on storage coil and superconducting switch components have been nearly completed.[2] This level was intended to determine the scientific feasibility of the superconducting inductive power source concept. Some work remains at this level in testing components within a 1 kA METS transfer system.

TABLE I

METS Component Development

Level	E(storage)	I_o	V_o	τ
1	20 kJ	1 kA	2 kV	10 ms
2	300 kJ	10 kA	40 kV	2 ms
3	475 kJ	25 kA	60 kV	1 ms

Level 2 includes our present activities which were begun about one year ago and will continue for the next one and one-half years. This level represents the major step toward engineering feasibility at high current and high voltage. All significant parameters of the METS system prototype components are within a factor of two of those expected in the test reactor METS system. Test facilities for this level are reported here. Level 3 includes the final FTR module components. Design work is already proceeding at this level.

Superconducting Coil and Switch Test Facility

Superconducting inductive energy storage coils and superconducting switches with nominal current ratings to 10 kA are tested in a common facility as shown in Fig. 2, and its electrical circuit is represented schematically in Fig. 3. A 0.61 m (24-in.) i.d. by 1.83 m (72-in.) high fiberglass/epoxy ℓHe dewar contains the storage coil, and a 0.46 m (18-in.) i.d. by 3.05 m (120-in.) high stainless steel ℓHe dewar contains the switch.

The high current leads entering the ℓHe dewars have been designed for minimum heat leak at zero current. At maximum current the boil-off helium vapor exiting through the current leads removes the I^2R power loss heat load from the lead. A part of the I^2R power enters the cryogen to create the proper boil-off rate. High current vapor-cooled leads built by American Magnetics, Inc. have operated successfully to 10 kA. Leads of LASL design with slightly higher standby heat load have been tested successfully to 12.5 kA. Standby heat load for these leads is approximately 20 W per pair.

The 6 volt homopolar generator is capable of 10 kA continuous current, and can be run to 18 kA at low duty factor. Current ramp rates up to 1 kA/s are possible into a 6 mH coil, although 100 A/s is the typical testing ramp. Current ramp rates to 500 A/s have been made when testing superconducting switches without a coil in series.

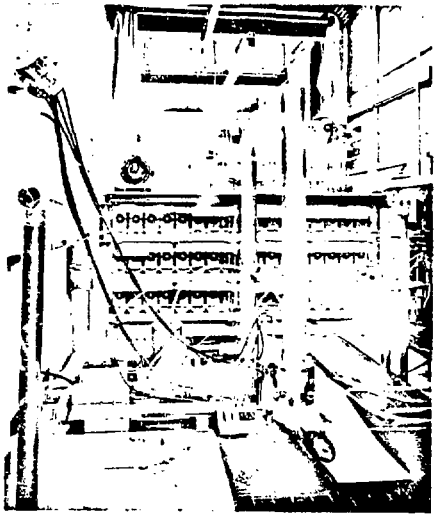

Fig. 2. 300 kJ Superconducting Coil and Superconducting Switch Test Facility. The coil and switch liquid helium dewars are in the pit in foreground. The transfer capacitor bank and part of the interrupter test facility are in the background.

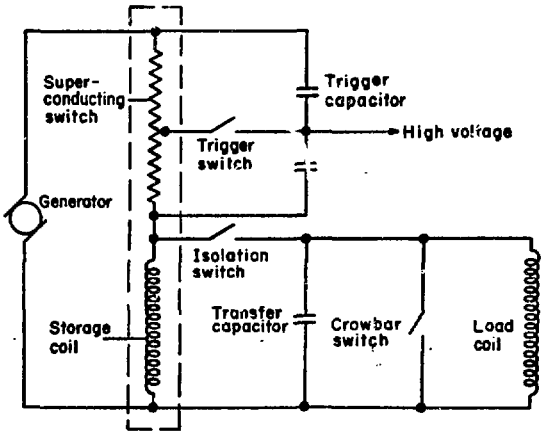

Fig. 3. Magnetic Energy Storage Module. Cryogenic elements are enclosed in dashed lines. The storage and load coil inductances are 6 mH, the 40 kV transfer capacitor is 187.5 μF. The transfer time is 2.35 ms.

The high current bus connecting beyond the wall to the generator can be seen at the lower left in Fig. 2. Low inductance, high power 10 μΩ current viewing resistors (T and M Research Products, Inc.) are used to measure fast and slow current transients, Rogowski loops are used to measure switching transients.

System grounding and signal cable shielding are extremely critical in fast, high current inductive circuit monitoring. The oscilloscope screen room is connected by low inductance copper sheet to the system ground and all signal cables are shielded to the screen room from close to their monitoring points. All common mode rf noise is removed from the signals and all scopes are individually isolated from ground and coupling through the ac power lines.

Protection circuitry monitors the system voltage

to detect any normal-going switch transitions during charging current ramps. The switch capacitor discharge trigger is fired to drive the entire switch normal before localized hot spots can develop within the switch conductor.

A 3.4 Ω superconducting switch[1] with an Ayrton-Perry winding configuration has been tested within the facility. The current level reached 6.15 kA before it self-quenched. A 5-in-parallel set of accordion braid switches has reached 10 kA.

Three, 300 kJ superconducting coils are being produced by industry and will undergo tests within this facility during the next year. Structural integrity will be tested under repeated thermal cycling and magnetic load cycling. Energy loss within a coil during fast discharge will be measured by integrating the local liquid helium boil-off with a shroud and collection chamber. Three liters or less of pulse boil-off gas is expected if the coil energy loss specification of 0.3% (900 J) of the stored energy is met.

Fig. 4. 10 kA, 300 kJ Superconducting Coil. Its inductance is 4.94 mH. The high current vapor-cooled leads are seen at the top. Energy storage has reached 386 kJ at 12.5 kA in this coil without reaching its critical current.

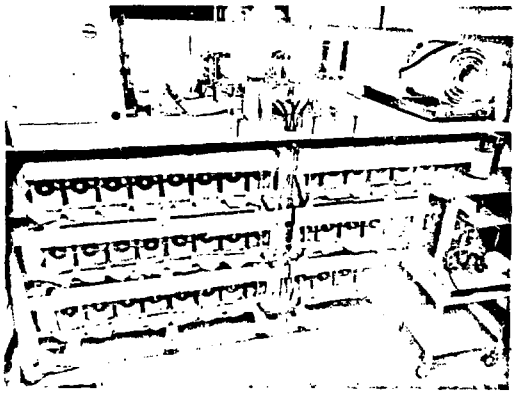

Fig. 5. 10 kA Interrupter Test Facility with an interrupter to be tested in the foreground. The 2 mH dummy storage coil, dump resistor, high voltage headers and shorting balls are located on top of the capacitor bank.

The storage coil presently in use for facility check out and switch tests is shown in Fig. 4. It is a 4.94 mH single layer edge wound coil with 122.5 turns of Kryo 210 conductor. This 0.005 by 0.01 m conductor is epoxy bonded to a fiberglass/epoxy coil form. The winding has an inside diameter of 0.56 m and is 0.73 m long. The conductor has 2640 NbTi filaments in a copper matrix. Copper to superconductor area ratio is 6:1. This low resistance matrix will give relatively high eddy current losses during pulse discharge. These losses have not been measured. Conductor characteristics are elaborated on elsewhere.[3]

The coil has been operated at 12.5 kA maximum current without going normal, with no indications of training, and with no evidence of structural damage. Stored energy at this level was 386 kJ with an internal magnetic field of 2.3 T.

High Voltage DC Current Interrupter Test Facility

Superconducting switches within an FTR power system would force a heavy load on the cryogen refrigeration system. Use of in-line low resistance contactors within the cryostat and a breaker external to the cryostat to perform the current interruption to initiate energy transfer would remove most of the heat load. Ambient temperature dc current interruption techniques are being investigated, and a test facility has just been completed to test various parameters and hardware.

The Interrupter Test Facility is shown in Fig. 5, and is represented schematically in Fig. 6. The facility models the voltage and current waveforms on the current interrupter to those expected within a METS-FTR system. The operational sequence of the test circuit begins by charging the dummy storage coil to 10 kA from the capacitor storage bank. At peak current the crowbar ignitron is fired, and the stored current begins a long L/R decay. The breaker under test is opened and begins to arc. At a specified time later the counterpulse current is started by firing the counterpulse ignitron. The reverse current forces two current zeroes within the breaker on a time scale determined by the saturable reactor and transfer capacitor ringing frequency. At zero current the arc extinguishes; and if held off for an appropriate interval, the voltage rising on the breaker due to the storage coil charging the transfer capacitor will not restrike an arc. At peak voltage the dump spark gap is triggered, removing the voltage from the circuit in several R_dC_t decay times.

Currents to 12 kA and voltages to 40 kV will be tested on the interrupters. Counterpulse current off-times can be varied over wide ranges to cover all expect-

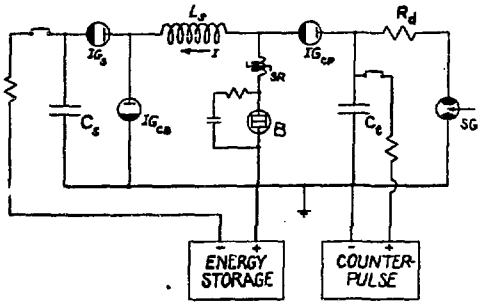

Fig. 6. DC Current Interrupter Test Circuit. C_s is 150 kJ energy storage capacitor for driving L_s, the 100 kJ, 10 kA dummy storage coil. C_t is the 40 kV transfer capacitor, and R_d is the energy dump resistor. IG_s, IG_{CB}, and IG_{CP} are the start, storage crowbar, and counterpulse ignitrons, respectively. SG is the dump spark gap. SR is a saturable reactor, B is a breaker.

ed arc plasma deionization times.

Several commercially available ac vacuum interrupters will be tested for this dc current interruption application. One such example is shown in Fig. 7, a Ross Engineering product. No data exist at present on the reliability of vacuum interrupters used for dc current interruption at these high current levels.

Several other interruption techniques are being developed within LASL and Hughes Research Laboratories.

We expect to reach interruption currents of 25 kA and stand-off voltages of 60 kV within the next one and one-half years.

Prototype METS-FTR Module Test Facility

The circuit as shown schematically in Fig. 8 represents the present module of the conceptual METS - FTR system. It is expected within one year that a reliable 10 kA, 40 kV interrupter will be available for building a prototype 300 kJ METS module.

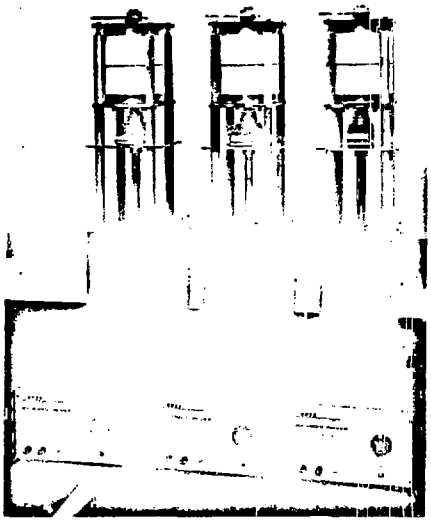

Fig. 7. Three Ross Engineering Vacuum Interrupter Units. Mechanical actuation of the moving electrodes is accomplished with capacitor discharge solenoid drivers. Two units in series may be capable of 10 kA interruption with 40 kV stand-off.

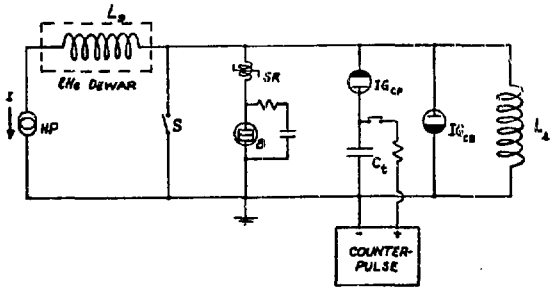

Fig. 8. METS-FTR Prototype Module Circuit. The superconducting coil and interrupter test facilities are combined to run 10 kA prototype module tests. HP is the 6V, 10 kA homopolar generator. S is a low resistance shunt switch, SR is a saturable reactor, B is the dc current interrupter, IG_{CP} and IG_{CB} are the counterpulse and crowbar ignitrons, respectively, and C_t is the transfer capacitor. Inductance of the load coil, L_ℓ, is matched to the superconducting storage coil, L_s.

The interrupter test facility was constructed adjacent to the 300 kJ coil test facility for the purpose of running the two facilities as a unit during prototype module tests. The transfer capacitor bank, interrupter and load coil from the interrupter test facility are coupled to the 300 kJ coil and homopolar generator.

A low resistance shunt switch bypasses the energy transfer circuit until the current has been ramped up in the coil. At peak current the shunt switch is opened, followed by the normal sequence of operations for energy transfer to the dummy load coil. Low resistance cryogenic contactors will be tested in the 300 kJ coil facility and in the combined facility when they have reached the design requirements.

Both the superconducting coil test facility and the interrupter test facility can be readily upgraded to begin component testing at the actual FTR levels of current, voltage, and transfer time.

ACKNOWLEDGMENTS

The authors want to thank A. G. Bailey, R. A. Haarman, E. L. Kemp and J. L. Rand for their significant contributions toward constructing the coil and switch test facility and the high voltage dc current interrupter test facility. We are indebted to H. L. Laquer for critical comments and assistance during preliminary work on the coil and switch test facility.

REFERENCES

1. J. D. G. Lindsay, D. J. Blevins, H. L. Laquer, G. A. Miranda, J. D. Rogers, C. E. Swannack, and D. M. Weldon, Proceedings of IEEE 6th Applied Superconductivity Conference, Oakbrook, Illinois, September 30 - October 2, 1974, to be published.

2. H. L. Laquer, J. D. G. Lindsay, E. M. Little, and D. M. Weldon, Proceedings of IEEE 5th Applied Superconductivity Conference, Annapolis, Maryland, May 1 - 3, 1972, p.98.

3. G. A. Miranda and J. D. Rogers, Proceedings of IEEE 6th Applied Superconductivity Conference, Oakbrook, Illinois, September 30 - October 2, 1974, to be published.