Dr -1111

200
12-19-74

LA-5779-MS
Informal Report

UC-20
Reporting Date: October 1974
Issued: November 1974

Calculation of Magnetic Fields with Given, Nearly Cylindrical, Conducting Walls

by

Guthrie Miller

MASTER

los alamos
scientific laboratory
of the University of California
LOS ALAMOS, NEW MEXICO 87544

UNITED STATES
ATOMIC ENERGY COMMISSION
CONTRACT W-7405-ENG. 36

DISTRIBUTION OF THIS DOCUMENT IS UNLIMITED

In the interest of prompt distribution, this LAMS report was not edited by the Technical Information staff.

Printed in the United States of America. Available from
National Technical Information Service
U.S. Departmment of Commerce
5285 Port Royal Road
Springfield, VA 22151
Price: Printed Copy $4.00 Microfiche $2.25

This report was prepared as an account of work sponsored by the United States Government. Neither the United States nor the United States Atomic Energy Commission, nor any of their employees, nor any of their contractors, subcontractors, or their employees, makes any warranty, express or implied, or assumes any legal liability or responsibility for the accuracy, completeness or usefulness of any information, apparatus, product or process disclosed, or represents that its use would not infringe privately owned rights.

NOTICE

This report was prepared as an account of work sponsored by the United States Government. Neither the United States nor the United States Atomic Energy Commission, nor any of their employees, nor any of their contractors, subcontractors, or their employees, makes any warranty, express or implied, or assumes any legal liability or responsibility for the accuracy, completeness or usefulness of any information, apparatus, product or process disclosed, or represents that its use would not infringe privately owned rights.

CALCULATION OF MAGNETIC FIELDS WITH GIVEN, NEARLY CYLINDRICAL, CONDUCTING WALLS

by

Guthrie Miller

ABSTRACT

It is shown how the magnetic field inside a nearly cylindrical hollow conductor can be calculated using a perturbation method. Numerical results are given for the Scyllac compression coil and a possible larger bore Scyllac coil.

I. INTRODUCTION

The problem of calculating the magnetic field trapped inside a hollow conductor of arbitrary shape is a difficult one, involving solution of Laplace's equation in three dimensions or something of equivalent complexity. However, for nearly cylindrical shapes it is well known that useful results can be obtained analytically by a perturbation expansion. Here this method is taken over for machine calculation and it is shown possible to obtain results to high order in the deviation from a cylindrical shape with relatively little effort. This work was aided by the use of existing programs to calculate flux surfaces, allowing a nice check that a flux surface is indeed produced at the conducting wall.

II. METHOD

We use a standard theoretical approach in sharp boundary MHD problems, analytic perturbation theory.[1] We imagine an initially cylindrical hollow conducting tube containing a uniform axial field B_o to be slightly distorted in shape, perturbing the trapped magnetic field. The change in magnetic field is assumed to be of the form

$$\chi = \sum_{\substack{m,n \\ n>0}} C_{mn} I_m(nhr)\, \sin(m\phi - nhz) + \sum_{m>0} C_{m0}\, (hr)^m \sin(m\phi) \qquad (1)$$

where $2\pi/h$ is the period of the surface distortion as a function of z.

The functions appearing in Eq.(1) are not a complete set in the distorted volume and the series representation given by Eq.(1) is asymptotically correct for small surface perturbations rather than convergent.[2]

The coefficients C_{mn} are determined partly by the requirement that $\vec{B}\cdot\vec{n} = 0$ on the conducting wall, where $\vec{B}$ is the magnetic field, and $\vec{n}$ the normal to the surface. Substituting $\vec{B} = B_o\vec{e}_z + \nabla\chi$ and $\vec{n} = \nabla\left(r-b-\psi(\phi,z)\right)$ in the equation $\vec{B}\cdot\vec{n} = 0$ we obtain

$$\frac{\partial\chi}{\partial r} = B_o \frac{\partial\psi}{\partial z} + \nabla\chi\cdot\nabla\psi \quad . \qquad (2)$$

MASTER

ψ is the radial distortion of the surface and is assumed small. The equation of the conducting wall is $r = b + \psi$.

Equation (2) is rewritten so the left-hand side involves χ evaluated at a fixed radius.

$$\left.\frac{\partial\chi}{\partial r}\right|_{r=b} = B_o \frac{\partial\psi}{\partial z} + \nabla\chi\cdot\nabla\psi + \left.\frac{\partial\chi}{\partial r}\right|_{r=b} - \left.\frac{\partial\chi}{\partial r}\right|_{r=\psi} \quad . \qquad (3)$$

If the terms proportional to χ appearing on the right-hand side of this equation are neglected there remains a simple equation for χ. The other terms are taken into account by iteration, starting with $\chi^{(0)} = 0$.

$$\left.\frac{\partial\chi}{\partial r}\right|_b^{(i)} = B_o \frac{\partial\psi}{\partial z} + \nabla\chi^{(i-1)}\cdot\nabla\psi + \left.\frac{\partial\chi}{\partial r}\right|_b^{(i-1)} - \left.\frac{\partial\chi}{\partial r}\right|_\psi^{(i-1)} \quad . \qquad (4)$$

The coefficients $C_{mn}^{(i)}$ are determined by multiplying the expression on the right-hand side above by $\sin(m\phi-nhz)$ and integrating.

$$C_{mn}^{(i)} = \frac{\int \left.\frac{\partial\chi}{\partial r}\right|_b^{(i)} \sin(m\phi-nhz)\, d\phi dz}{2\pi^2 F} , \qquad (5)$$

where $F = nI_m'(nhb)$ for $n \neq 0$ and $F = m(hb)^{m-1}$ for $n = 0$.

At every iteration the average B_z field must be corrected to insure that the flux ψ remains constant. This is done by evaluating the flux

$$\phi = \int A \cdot d\ell \qquad (6)$$

for several fixed z circuits around the conducting wall cross section, taking the average over z positions, and comparing with the zero-order flux. The average B_z field at the ith iteration is given by

$$\frac{\overline{B}_z^{(i)}}{B_o} = \frac{\pi b^2 B_o}{\phi^{(i)}} . \qquad (7)$$

The average z component of the field is otherwise not changed by the iteration scheme, and the flux would in general differ from the zero-order flux.

To evaluate the flux using Eq.(6), a vector potential is needed. This is easily constructed for a scalar potential of the form given by Eq.(1). Each term in the sum Eq.(1) satisfies the following equations.

$$\frac{\partial^2\chi}{\partial z^2} = -n^2h^2\chi$$

$$\frac{\partial^2\chi}{\partial\phi^2} = -m^2\chi$$

$$\nabla^2\chi = 0 \qquad (8)$$

A vector potential corresponding to the m,n term is as follows if $n \neq 0$.

$$A_r = -\frac{1}{n^2h^2 r}\frac{\partial^2\chi}{\partial z\partial\phi}$$

$$A_\phi = \frac{1}{n^2h^2}\frac{\partial^2\chi}{\partial z\partial r}$$

$$A_z = 0 . \qquad (9)$$

For $m \neq o$, a vector potential is

$$A_r = \frac{r}{m^2}\frac{\partial^2\chi}{\partial\phi\partial z}$$

$$A\phi = 0$$

$$A_z = -\frac{r}{m^2}\frac{\partial^2\chi}{\partial\phi\partial r} . \qquad (10)$$

The zero-order field has a vector potential $A_\phi = B_o r/2$.

The complete solution is of the form $\vec{B} = \overline{B}_z\vec{e}_z + \nabla\chi$. The correction to $\chi^{(i)}$ is of order $i + 1$ in ψ, hence $\chi^{(i)}$ is correct to order i in ψ.

For the calculations described here, the surface perturbation was of the form

$$\psi = b\left(\Delta_o\cos(hz) + \Delta_1\cos(\phi-hz)\right) \qquad (11)$$

appropriate for a toroidal theta pinch with $\ell=0$ and $\ell=1$ fields such as Scyllac. Toroidal curvature was neglected. However, as will be discussed later, for a large radius of curvature such as that of Scyllac (400 cm) this produces only a small change in the flux surfaces.

The numerical integrations were done in a straightforward way, using an efficient one-dimensional integration subroutine, nested for the double integration. Program running time was a function mainly of the number of iterations. For a calculation with three iterations, 4 minutes of CDC 7600 time were required. A fifth-order calculation required 40 minutes. An increase in the integration accuracy greatly increased the time with little change in the results.

III. RESULTS

Two cases were investigated, one a bumpy helical conducting surface of average bore 14 cm, very similar to the Scyllac compression coil, and the

second a possible larger bore Scyllac-type coil. The solutions were checked by following a field line successive periods in the z direction to generate a flux surface. In almost all cases, the flux line after one revolution closed on its initial trajectory with an imperceptible displacement error.

Scyllac

The conducting surface had the parameter values $b = 7$ cm, $\Delta_0 = -.035$, $\Delta_1 = .085$. After three iterations the potential χ was the following,

$$\begin{aligned}\chi = {} & .8235\, I_1(hr)\, \sin(\phi - hz) \\ & -.4067\, I_0(hr)\, \sin(-hz) \\ & -.0291\, I_2(2hr)\, \sin(2\phi - 2hz) \\ & +.0161\, I_1(2hr)\, \sin(\phi - 2hz) \\ & +.0082\, hr\sin\phi \\ & -.0042\, I_2(hr)\, \sin(2\phi - hz) \\ & -.00424\, I_0(2hr)\, \sin(-2hz) \\ & -.00106\, I_2(3hr)\, \sin(2\phi - 3hz) \\ & +.00182\, I_3(3hr)\, \sin(3\phi - 3hz)\end{aligned} \qquad \text{(III-1)}$$

This neglects other terms smaller than 10^{-4}. $\overline{B}_z$ was 1.0048 for $B_0 = 1$.

Flux surfaces corresponding to this potential along with the conducting tube cross section at various z values are shown in Fig. 1. The field given by Eq. (III-1) is evidently an entirely satisfactory solution.

The only case of a noticeable lack of closure of a flux line occurred for the small-diameter flux surface shown in Fig. 1. The rotation per period in this case was very small, and whether the effect resulted merely from numerical inaccuracy in following the field line a longer distance was not investigated.

Toroidal curvature was introduced in the usual way by letting $\overline{B}_z \to \overline{B}_z(1 - r/R \cos\phi)$ and flux surfaces were recalculated. They differed very little from those shown in Fig. 1 for the Scyllac radius of curvature $R = 400$ cm. Thus the field given by Eq. (III-1) is a valid solution for a large radius toroidal conducting wall as well.

The coordinate system used is not centered on the magnetic axis, the point in Fig. 1 where small radius flux surfaces appear to enter as a group. The following transformation can be used to obtain the coefficients in a displaced coordinate system.

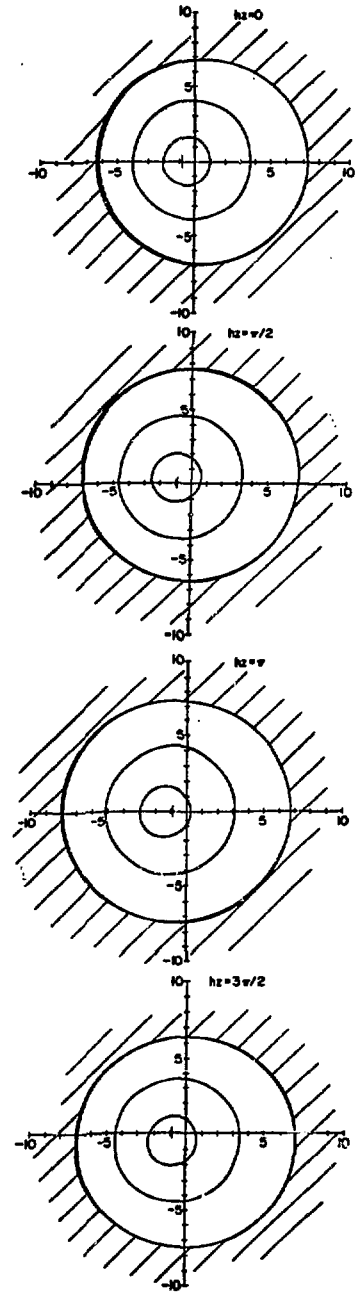

Fig. 1. Flux surfaces for the third-order solution given by Eq. (III-1) showing agreement with the conductor cross section.

$$\tilde{C}_{mn} = C_{mn} + \frac{nh\xi}{2} C_{m-1n} + \frac{nh\xi}{2} C_{m+1n} + \ldots (m \neq 1)$$

$$\tilde{C}_{1n} = C_{1n} + nh\xi\, C_{0n} + \frac{nh\xi}{2} C_{2n} + \ldots (m=1) \;, \qquad \text{(III-2)}$$

where ξ is the displacement in the x direction (ϕ=0) and the formula is valid for small ξ. Thus displacement of the coordinate system to the magnetic axis will develop $\tilde{C}_{-11}$ and $\tilde{C}_{21}$ terms from the large C_{01} and C_{11} coefficients.

Of main interest for a toroidal theta pinch like Scyllac are the field components $B_{\ell=1}/B_o$ and $B_{\ell=0}/B_o$. These are defined as

$$\left(\frac{B_{\ell=1}}{B_o}\right) = hC_{11}/(2\bar{B}_z) = .061$$

$$\left(\frac{B_{\ell=0}}{B_o}\right) = -hC_{01}/\bar{B}_z = .061 \;, \qquad \text{(III-3)}$$

where the values on the right-hand side are those obtained from the third-order solution given in Eq. (III-1).

These field components are calculated quite accurately by the first-order formulas obtained after one iteration of Eq. (4).

$$\left(\frac{B_{\ell=1}}{B_o}\right) = \frac{hb\Delta_1}{2I_1'(hb)} = .062$$

$$\left(\frac{B_{\ell=0}}{B_o}\right) = -\frac{hb\Delta_o}{I_o'(hb)} = .059 \;. \qquad \text{(III-4)}$$

Larger Bore "Scyllac"

For the parameter values b=12 cm, Δ_o = -.09 and Δ_1 = .1, somewhat less satisfactory results were obtained. Figure 2 shows flux surfaces calculated using the fifth-order solution. The "improvement" of the solution with iteration is slow and indeed may be nonexistent at fifth order. This is probably a demonstration of the asymtotic nature of the series.

In Fig. 3 are shown the outer flux surfaces corresponding to the first-through fifth-order solutions. The flux surfaces have a tendency to oscillate about the conducting wall with iteration.

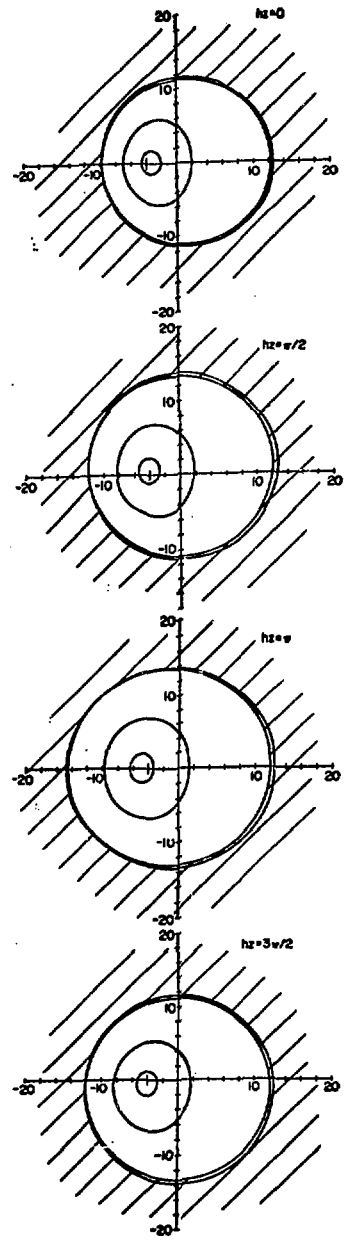

Fig. 2. Flux surfaces corresponding to the fifth-order solution for a larger diameter conducting wall cross section.

In Table I we show how the largest components of the potential vary with each iteration. The C_{01} and C_{11} coefficients (or equivalently $B_{\ell=0}/B_o$ and $B_{\ell=1}/B_o$) vary little from iteration to iteration and are very close to the first-order values.

In the larger bore case the effect of toroidal curvature is more pronounced. The effect for R = 400 cm was such that the fourth-order flux surface in Fig. 3 was made almost coincident with the conducting wall. The smaller diameter flux surfaces showed a similar bulge to the right with the addition of toroidal curvature.

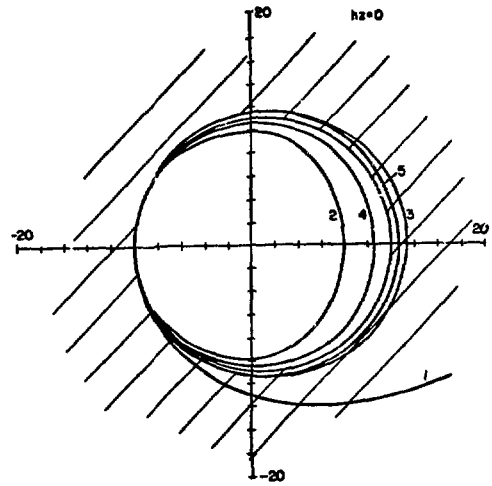

Fig. 3. Outer flux surfaces for first-through fifth-order solutions. The flux line that develops the surface is started off in each case on the left side of the conducting wall.

IV. CONCLUSIONS

It is possible to approximately calculate the magnetic field trapped by conducting walls that are nearly cylindrical. The simple first-order expressions for the field components are found to be quite accurate, and thus the task of designing a shaped cylindrical conducting tube to produce desired field components is simplified. In particular, the desired $B_{\ell=0}$ and $B_{\ell=1}$ fields for a toroidal ℓ=0,1 theta pinch can easily be obtained using a cylinder with bumpiness Δ_o and helical distortion Δ_1 given by Eq.(III-4).

TABLE I

m n	(1) C_{mn}	(2) C_{mn}	(3) C_{mn}	(4) C_{mn}	(5) C_{mn}
0 1	-.820	-.794	-.822	-.816	-.822
0 2		-.016	-.014	-.017	-.015
1 0		.032	.030	.032	.031
1 1	.954	.926	.961	.952	.960
1 2		.035	.031	.036	.033
2 1		.016	.015	-.005	-.015
2 2		-.027	-.023	-.029	-.026
$\overline{B}_z$	1.034	1.030	1.032	1.031	1.032

REFERENCES

1. A. A. Blank, H. Grad, and H. Weitzner, "Plasma Physics and Controlled Nuclear Fusion Research," Novosibirsk Conference Proceedings, 1968, Vol. II, p. 607, IAEA, Vienna (1969).

2. H. Weitzner, private communication.