200
1-15-75

02-1124

LA-5788-MS
Informal Report

UC-20
Reporting Date: October 1974
Issued: November 1974

Preliminary $\ell_{1,0}$ Feedback Force Experiments on Scylla IV-3

by

W. R. Ellis
R. F. Gribble
C. R. Harder*

*L 551, General Atomics, P. O. Box 81608, San Diego, CA 92138

los alamos
scientific laboratory
of the University of California
LOS ALAMOS, NEW MEXICO 87544

NOTICE

This report was prepared as an account of work sponsored by the United States Government. Neither the United States nor the United States Atomic Energy Commission, nor any of their employees, nor any of their contractors, subcontractors, or their employees, makes any warranty, express or implied, or assumes any legal liability or responsibility for the accuracy, completeness or usefulness of any information, apparatus, product or process disclosed, or represents that its use would not infringe privately owned rights.

UNITED STATES
ATOMIC ENERGY COMMISSION
CONTRACT W-7405-ENG. 36

In the interest of prompt distribution, this LAMS report was not edited by the Technical Information staff.

Printed in the United States of America. Available from
National Technical Information Service
U.S. Department of Commerce
5285 Port Royal Road
Springfield, VA 22151
Price: Printed Copy $4.00 Microfiche $2.25

This report was prepared as an account of work sponsored by the United States Government. Neither the United States nor the United States Atomic Energy Commission, nor any of their employees, nor any of their contractors, subcontractors, or their employees, makes any warranty, express or implied, or assumes any legal liability or responsibility for the accuracy, completeness or usefulness of any information, apparatus, product or process disclosed, or represents that its use would not infringe privately owned rights.

PRELIMINARY $\ell_{1,0}$ FEEDBACK FORCE EXPERIMENTS ON SCYLLA IV-3

by

W. R. Ellis, R. F. Gribble, and C. R. Harder

ABSTRACT

We report some initial experimental results with the $\ell_{1,0}$ feedback system developed for Scyllac. An $\ell = 1$ field component when added to the normal Scylla IV-3 straight theta pinch induced an $m = 1$ plasma instability whose motion could be either reversed or enhanced by an appropriate choice of polarity of the $\ell = 0$ feedback fields. The feedback field was generated by ten power-amplifier modules. A position detector was not used in these experiments, and the feedback loop was not "closed".

The $\ell = 0$ MHD feedback stabilization system (minus position detectors) developed for Scyllac to control long-wavelength ($k \gtrsim 0$), $m = 1$ plasma instability motion was installed on the three-meter linear theta pinch Scylla IV-3[1,2] for checkout and preliminary evaluation. The feedback force[3] was produced by the addition of an $\ell = 0$ field from the feedback coils to the $\ell = 1$ field generated by appropriately shaping[4] the inside surface of the main theta-pinch compression coil. This $\ell = 1$ field also produced the initial $m = 1$ plasma instability, whose direction could be preselected by displacing the quartz discharge tube away from the $\ell = 1$ magnetic axis in the chosen direction. The $\ell = 1$ magnetic axis (which was found to be slightly displaced away from the geometric axis of the theta pinch, in a direction opposite to the single feed-slot) was located empirically by moving the discharge tube between shots until no instability motion could be detected on the time scale of the experiment (~ 5 μsec), as determined by the onset of end effects. When the feedback modules were switched on at sufficiently early times ($\lesssim 0.5$ μsec after main bank firing time), the feedback force developed was sufficiently strong to stop and reverse the plasma column motion to the wall. The turn-on time of the feedback current was ~ 1.2 μsec (to 90% peak value) and the rise time of the (crowbarred) theta-pinch field was 3.6 μsec.

The Scyllac prototype feedback system,[5,6] shown schematically in Fig. 1, consisted of the following four basic components: (1) a plasma position detector (not shown), which images the plasma onto a solid-state, quad-cell sensor; (2) a signal processing unit, which differentiates and amplifies sum and difference signals received from the position detector, determines the plasma equilibrium position about which feedback control is maintained, and selectively energizes the power modules; (3) the power modules, one per wavelength of $\ell = 1$ field ($\lambda = 30$ cm, therefore ten modules), each consisting of three vacuum-tube and two transistor amplifier stages ending in push-pull operation of two Machlett ML-8618 power triodes which together are capable of driving 5.5 kA at 5.5 kV through a pair of feedback coils; (4) the $\ell = 0$ feedback coils[7] themselves (four per wavelength, for a total of forty), each consisting of a single-turn, epoxy-insulated metal strap, 6 cm wide, which encircles the discharge tube inside the compression coil.

The feedback control is provided by adding a small but controllable $\ell = 0$ field[8] to the fixed $\ell = 1$ field to produce a unidirectional sideways force $F_{1,0}$ on the plasma column which is independent of z. According to sharp-boundary theory[3] this

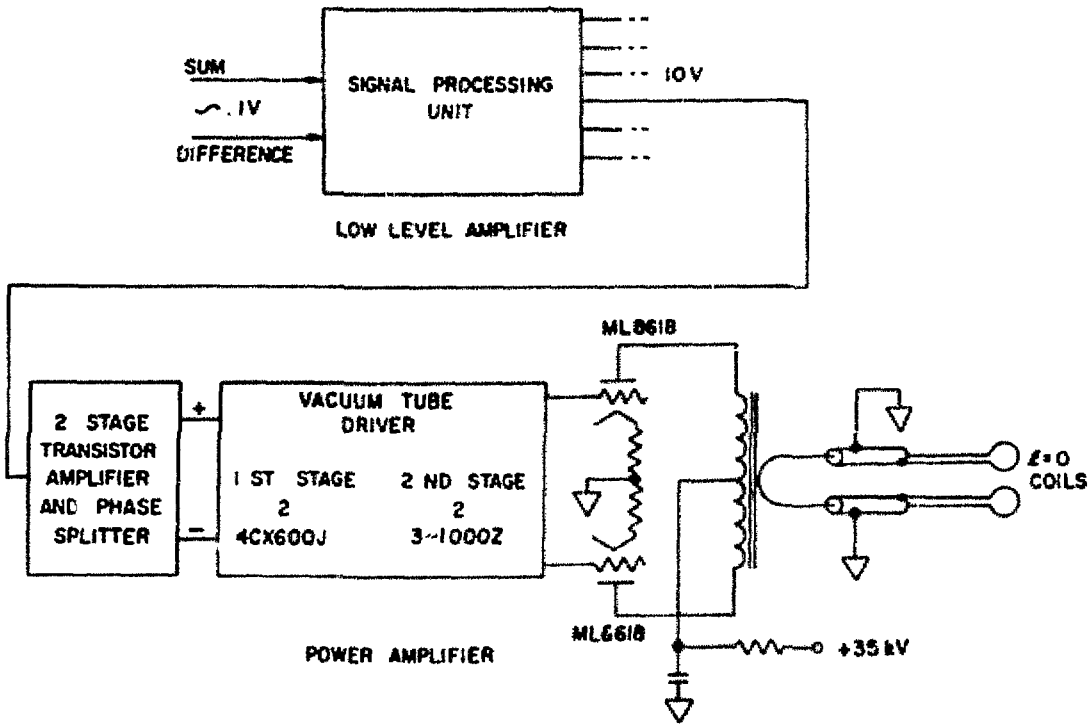

Fig. 1. Block diagram of feedback stabilization system.

force is given by

$$F_{1,0} = [\beta(3-2\beta)/8]\, B_o^2\, h^2\, a^3\, \delta_1\, \delta_0^{FB} \qquad (1)$$

($\epsilon = ha \ll 1$) in terms of the $\ell=1$ (helical) and $\ell = 0$ (bump) distortions of the plasma boundary,

$$\delta_1 = \frac{B_{\ell=1}}{B_o} \quad \frac{1}{\epsilon(1-\beta/2)} \quad (\epsilon \ll 1) \qquad (2)$$

and

$$\delta_o^{FB} = \frac{B_{\ell=0}}{B_o} \quad \frac{1}{2(1-\beta)} \quad (\epsilon \ll 1)\ . \qquad (3)$$

normalized to the unperturbed plasma radius a. Here $B_{\ell=1}$ is the (transverse) $\ell = 1$ field, and $B_{\ell=0}^{FB}$ is the applied (bumpy) feedback field. The other symbols, β, h, and B_o, are the ratio of plasma pressure to magnetic field pressure, $\lambda = 1.0$ wavenumber ($h = 2\pi/\lambda = 0.2093\ cm^{-1}$), and theta-pinch magnetic field, respectively.

The m = 1 instability growth rate due to the presence of an $\ell = 1$ field is given by sharp-boundary theory (old ordering) as [8]

$$\gamma_1^2 = h^2\, v_A^2 \left[\frac{\beta(4-3\beta)(2-\beta)}{8(1-\beta)}\right] \epsilon^2\, \delta_1^2 \qquad (4)$$

where $V_A = B_o/(4\pi\rho)^{1/2}$ is the Alfvén speed. If we assume that the particle number density n is given by the filling density multiplied by the compression ratio (an assumption which was verified by numerous end-on holographic measurements on Scylla IV-1 during these experiments), then, in convenient units,[9]

$$V_A = 1.87 \times 10^7\ \frac{B_o}{P^{1/2}}\ \frac{a}{R_t}\ \frac{cm}{sec} \qquad (5)$$

and

$$\gamma_1 = \frac{5.18\times10^5}{P^{1/2}}\ \frac{B_o a}{\lambda R_t} \left[\frac{\beta(4-3\beta)(2-\beta)}{(1-\beta)(1-\beta/2)}\right]^{1/2} \left(\frac{B_{\ell=1}}{B_o}\right) sec^{-1} \qquad (6)$$

[V_A in cm/sec and γ_1 in sec^{-1} for B_o in kG, a, λ, and R_t (the tube inner radius) in cm and P (the deuterium filling pressure) in mtorr].

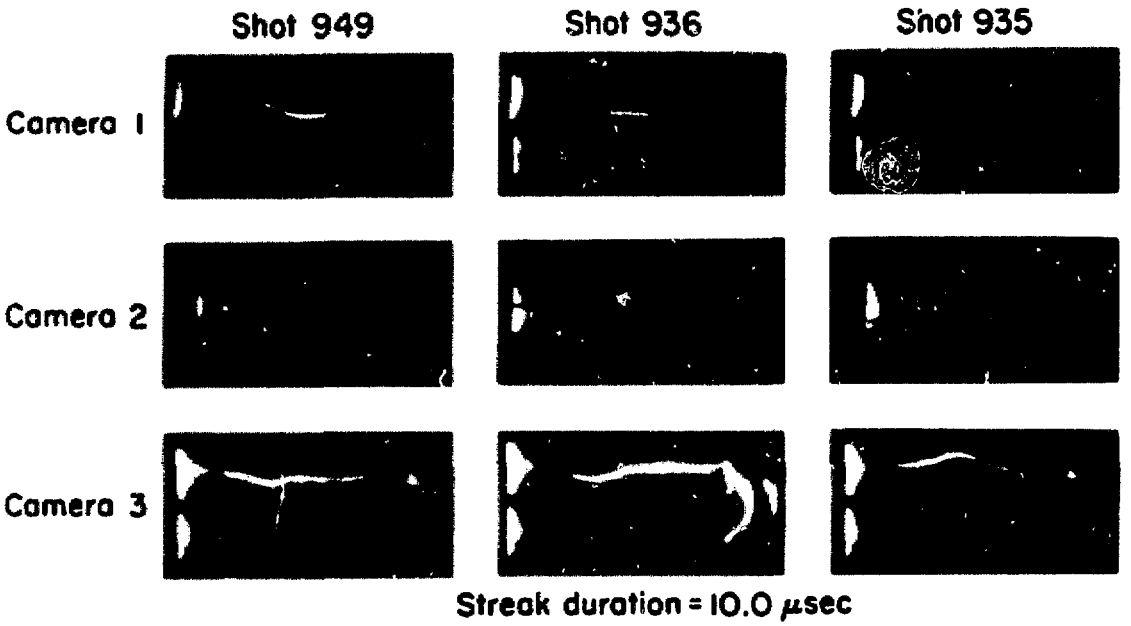

Fig. 2. Demonstration of feedback force on Scylla IV-3. Shot 949 is a control shot showing $k \gtrsim 0$ motion toward the feed slot. Shots 936 and 935 show the effects of applying $\ell = 0$ fields from the feedback modules with polarities to aid and oppose the instability respectively. Streak camera orientation: Cameras 1 and 3 show stereoscopic views of the plasma at locations 90 cm from the east and west ends of the machine, respectively. The top picture of the pair shows motion in the horizontal plane with motion away from the feed slot appearing as an upward motion in the photograph. The bottom picture of the pair shows motion in the vertical plane (downward for a down-going image). Camera 2, located 135 cm from the east end of the machine, shows horizontal motion only.

In the Scylla IV-3 experiments reported here (carried out in Jan.-Feb., 1973), typical experimental values were $B_o \sim 40$ kG, $a \sim 1$ cm, $\ell = 30$ cm, $R_t \sim 4.4$ cm, $P = 10$-15 mtorr, $\beta \sim 0.6$, $B_{\ell=1}/B_o \sim 0.04$, and $B^{FB}_{\ell=0}/B_o \sim 0.004$. The experimentally measured growth rate γ_1 (without feedback) was $\gamma_1 \sim 0.9 \times 10^6$ sec^{-1}, or ~ 2.5 times the value predicted by Eq. (6) (0.36×10^6 sec^{-1}).

The streak photographs in Fig. 2 summarize the results of our experiments. The shot labeled 949 in Fig. 2 was a control shot with no $F_{1,0}$ force applied: it exhibits instability motion in a preselected direction (toward the feed slot, in the horizontal plane). This basic instability motion was operative in all shots shown here. Shots 935 and 936 show the effect of applying feedback in both polarities. With one polarity (Shot 936), the $\ell = 0$ phasing relative to the $\ell = 1$ field was such that the resulting $F_{1,0}$ force was in the same direction as the instability motion and enhanced it, as indicated by the earlier wall-hit time. With the opposite polarity (Shot 935), the $F_{1,0}$ force opposed the instability motion (the normal method of operation), and successfully reversed it.

In both of these shots, the $\ell = 0$ circuit was actually switched on by a timer 0.1 μsec after the main bank fired, thereby constituting a test of the $F_{1,0}$ force[8] but not of the entire feedback system, since the loop was not "closed". No position detector was used (or needed), since the direction of the plasma instability motion could be predicted prior to the shot. For this same reason, the $\ell = 0$ coils were energized for only one force coordinate (i.e., alternate coils were disconnected).

In a separate series of experiments the effect of longer delay times was investigated. It was established that the maximum tolerable turn-on delay in our system was ~ 0.5 μsec. In the case of Scyllac, newly-designed $\ell = 0$ coils [which double the present feedback field, to 380 gauss] are planned. Together with an anticipated slower $m = 1$ growth rate [λ will

be increased and B_o reduced; see Eq. (6)] these coils should permit an extension of the allowable feedback delay.

ADDENDUM

A series of inadvertant delays have kept this manuscript, originally prepared in Dec. 1973, from being published until the present time. The authors regret the delays.

REFERENCES

1. R. F. Gribble, W. E. Quinn, and R. E. Siemon, Phys. Fluids 14, 2042 (1971).

2. K. S. Thomas, C. R. Harder, W. E. Quinn, and R. E. Siemon, Phys. Fluids 15, 1658 (1972).

3. F. L. Ribe and M. N. Rosenbluth, Phys. Fluids 13, 2572 (1970).

4. W. R. Ellis, W. B. Riesenfeld, and G. A. Sawyer, Los Alamos Report LA-5474-P (1973).

5. R. F. Gribble, Proceedings of the Texas Symposium on the Technology of Controlled Thermonuclear Fusion Experiments and the Engineering Aspects of Fusion Reactors, USAEC Report CONF-721111, 601 (1972).

6. R. F. Gribble, S. C. Burnett, and C. R. Harder, Proceedings of the Second Topical Conference on Pulsed, High-Beta Plasmas, Garching, W. Germany, July 1972, p. 229-30, Garching Report IPP-1/127 (1972).

7. W. H. Borkenhagen, W. R. Ellis, H. W. Harris, and E. L. Zimmermann, Los Alamos Report LA-4815-MS (1971).

8. C. R. Harder, F. L. Ribe, R. E. Siemon, and K. S. Thomas, Phys. Rev. Lett. 27, 386 (16 Aug. 1971).

9. W. R. Ellis, J. P. Freidberg, and W. E. Quinn, Los Alamos Scientific Laboratory Report LA-5474-P, Suppl. (1974).