BNWL-1391
UC-70

WASTE SOLIDIFICATION PROGRAM
VOLUME 6

SPRAY SOLIDIFICATION PERFORMANCE DURING FIRST RADIOACTIVE TESTS IN WASTE SOLIDIFICATION ENGINEERING PROTOTYPES

August 1970

AEC RESEARCH & DEVELOPMENT REPORT

BNWL-1391

BATTELLE NORTHWEST
BATTELLE MEMORIAL INSTITUTE PACIFIC NORTHWEST LABORATORIES
3000 STEVENS DRIVE, P. O. BOX 999, RICHLAND, WASHINGTON 99352

LEGAL NOTICE

This report was prepared as an account of work sponsored by the United States Government. Neither the United States nor the United States Atomic Energy Commission, nor any of their employees, nor any of their contractors, subcontractors, or their employees, makes any warranty, express or implied, or assumes any legal liability or responsibility for the accuracy, completeness or usefulness of any information, apparatus, product or process disclosed, or represents that its use would not infringe privately owned rights.

PACIFIC NORTHWEST LABORATORY
RICHLAND, WASHINGTON
operated by
BATTELLE MEMORIAL INSTITUTE
for the
UNITED STATES ATOMIC ENERGY COMMISSION UNDER CONTRACT AT(45-1)-1830

AEC-RL RICHLAND, WASH.

3 3679 00048 4636

BNWL-1391
UC-70,
Waste Disposal
and Processing

WASTE SOLIDIFICATION PROGRAM
VOLUME 6
SPRAY SOLIDIFICATION PERFORMANCE DURING FIRST RADIOACTIVE TESTS IN WASTE SOLIDIFICATION ENGINEERING PROTOTYPES

By

W. R. Bond, J. N. Hartley, J. E. Mendel,
J. L. McElroy, K. J. Schneider and M. R. Schwab

Chemical Technology Department
Chemistry and Metallurgy Division

August 1970

BATTELLE MEMORIAL INSTITUTE
PACIFIC NORTHWEST LABORATORIES
RICHLAND, WASHINGTON 99352

Printed in the United States of America
Available from
Clearinghouse for Federal Scientific and Technical Information
National Bureau of Standards, U.S. Department of Commerce
Springfield, Virginia 22151
Price: Printed Copy $3.00; Microfiche $0.65

WASTE SOLIDIFICATION PROGRAM
VOLUME 6
SPRAY SOLIDIFICATION PERFORMANCE DURING FIRST RADIOACTIVE TESTS IN WASTE SOLIDIFICATION ENGINEERING PROTOTYPES

W. R. Bond, J. N. Hartley, J. E. Mendel,
J. L. McElroy, K. J. Schneider and M. R. Schwab

ABSTRACT

Battelle-Northwest has successfully demonstrated solidification of high-level radioactive waste by the Spray Solidification process. Approximately 7.8 million curies of radionuclides were processed and collected in 8 and 12-inch diameter containers during six engineering-scale demonstration runs in Waste Solidification Engineering Prototypes (WSEP) at the Pacific Northwest Laboratory. Radioactivity processed was increased from 83,000 curies in the first run to 3,000,000 curies in the sixth run. The self-generating heat rate within each receiver pot full of solidified waste was increased from 0.3 to 11 kilowatts (168 W/liter of solid), respectively. The solidified waste within a full 8-inch diameter pot represented 1.8 tonnes of power reactor fuel (irradiated at 20,000 MWd/tonne at a power level of 15 MW/tonne) for sulfate-free PW-1 waste and 0.95 tonnes for sulfate-containing PW-2 waste. High level aqueous radioactive waste was processed at overall rates of 11 to 18 liters/hr. The equivalent processing rates ranged from 0.46 to 0.9 tonnes/day of original fuel. From 11 to 75% of the total ruthenium fed to the solidifier was volatilized from the solidifier; entrainment of nonvolatiles was generally less than 0.1%. The WSEP auxiliary equipment consisting of an evaporator, an acid fractionator, filters, and a caustic scrubber reduced radionuclides in the stack gas to well below 10CFR20 release limits. The radionuclide content in the final

liquid effluent was decontaminated by a factor of 10^7 for non-volatiles and 10^4 to 10^5 for radioruthenium to concentrations acceptable for recycle to a fuel reprocessing plant or low-level treatment processes. The spray solidifier product caused no significant pressure increases within the containers after they were capped and welded.

This report is one of a series of reports from the Waste Solidification Demonstration Program being performed by Battelle-Northwest. Other current reports in this series are:

K. J. Schneider, Editor, Waste Solidification Program, Volume 1, Process Technology - Pot, Spray and Phosphate Glass Solidification Processes, U.S. AEC Report BNWL-1073, August 1969.

K. J. Schneider and V. P. Kelly, Waste Solidification Program, Volume 2, Design Features of the Waste Solidification Engineering Prototype, U.S. AEC Report BNWL-968, February 1969.

V. P. Kelly, Waste Solidification Program, Volume 3, Design Features of the Facilities and Equipment for the WSEP Product Evaluation Program, U.S. AEC Report BNWL-832, December 1968.

J. L. McElroy, C. R. Cooley, J. E. Mendel, W. V. DeMier, J. C. Suddath (ORNL), and J. O. Blomeke (ORNL), Waste Solidification Program, Volume 4, Pot Solidification Performance During the First Radioactive Tests in WSEP, U.S. AEC Report BNWL-814, December 1968.

J. L. McElroy, J. N. Hartley, K. J. Schneider, and R. F. Drager (BNL), Waste solidification Program, Volume 5, Phosphate Glass Solidification Performance During the First Radioactive Tests in the Waste Solidification Engineering Prototypes, U.S. AEC Report BNWL-1185, November 1969.

CONTENTS

LIST OF FIGURES. xi
LIST OF TABLES xv
1.0 INTRODUCTION 1.1
2.0 SUMMARY 2.1
2.1 Spray Solidifier Performance 2.1
2.2 Auxiliary Process Systems Performance. . . 2.5
2.3 Filled Pot Performance 2.8
2.4 Status of Spray Solidification 2.9
3.0 BACKGROUND, PROCESS DESCRIPTION AND PROCESS TECHNOLOGY. 3.1
3.1 Background 3.1
3.2 Process Description . . . 3.2
3.3 Process Technology . . . 3.7
4.0 SPRAY SOLIDIFICATION PERFORMANCE . . 4.1
4.1 Overall Processing Rates 4.3
4.2 Radionuclide Heating Effects . . 4.5
4.3 Waste Volume Reduction . . 4.9
4.4 Volatilization of Fission Products . . 4.11
4.5 Spray Calciner Performance . . 4.17
4.5.1 Calciner Feed System . . . 4.17
4.5.2 Drying Chamber. . . 4.22
4.5.3 Off-Gas Filtration. . . . 4.26
4.6 Performance of the Melter. . . . 4.32
4.6.1 Solids Addition . . 4.37
4.6.2 Melt Drain Systems. . . 4.39
4.6.3 Effect of Internal Heat Generation. . 4.44
4.7 General Performance and Operating History. . 4.44
4.7.1 Waste Composition Effects . . 4.44
4.7.2 Related Equipment . . 4.46
5.0 AUXILIARY PROCESS EQUIPMENT PERFORMANCE . . 5.1
5.1 Operating Modes 5.3
5.2 Ruthenium Control. 5.9
5.3 Control of Other Radionuclides 5.19

5.4 Nitrogen Balance . . 5.21
5.5 Handling of Purex Waste . . 5.24
5.6 General Performance of Auxiliaries . . 5.25
5.6.1 Pumps . . 5.25
5.6.2 Solidifier Condenser . . 5.27
5.6.3 Feed Control System and Flow Measurement . . 5.28
5.6.4 Evaporator and Acid Fractionator . . 5.28
5.6.5 Filters . . 5.29
5.6.6 Electrical and Instrument Wiring . . 5.30
5.6.7 Sampling 5.30
5.6.8 Material Balances . . 5.31
6.0 FILLED RECEIVER POT PERFORMANCE . . 6.1
6.1 Evaluations . . 6.1
6.1.1 Maximum Temperatures . . . 6.2
6.1.2 Experimental Data . . 6.4
6.1.3 Thermal Maximum 6.7
6.1.4 Thermal Maximum with a Molten Core. . 6.10
6.1.5 Radiation and Temperature Profiles. . 6.15
6.1.6 Calorimetry 6.17
6.1.7 Dimensions. 6.17
6.1.8 Density . . 6.18
6.1.9 Leach Rates . . . 6.18
6.1.10 Leak Test . . 6.21
6.1.11 Pressure . . . 6.24
6.1.12 Pot Corrosion . . 6.24
6.2 Pot Handling, Contamination Control and Welding 6.26
7.0 PROJECTED FLOWSHEETS FOR PW-1 AND PW-2. . . . 7.1
8.0 FUTURE WORK 8.1
8.1 WASTE TYPES 8.1
8.2 Equipment and Process Requirements . . 8.1
8.3 Auxiliary Systems. . 8.2
8.4 Filled Pot Performance . . 8.3

9.0 APPENDIX 9.1
9.1 Run Description 9.1
9.2 Startup Procedure for Spray Solidification Process 9.21
9.2.1 Spray Calciner and Calciner Furnace 9.22
9.2.2 Receiver Furnace 9.23
9.3 Normal Operating Procedure 9.23
9.3.1 Spray Calciner. 9.23
9.3.2 Melter 9.24
9.3.3 Melt Receiver 9.26
9.4 Shutdown Procedures 9.26
9.4.1 Spray Calciner. 9.26
9.4.2 Melter. 9.27
9.4.3 Melt Receiver 9.27
9.5 Post Run Filled Pot Procedures 9.27
10.0 ACKNOWLEDGEMENTS 10.1

FIGURES

3.1	Spray Solidification Equipment	3.4
4.1	Receiver Pot Temperatures (Bottom Four Zones) During Run SS-6	4.8
4.2	Thermocouple Arrangement of Spray Solidifier Receiver Pot	4.10
4.3	Accumulation of Ruthenium in Spray Solidifier Condensate	4.13
4.4	Spray Calciner Temperatures During Run SS-5	4.24
4.5	Spray Calciner Temperatures During Run SS-4	4.25
4.6	Location of Failed Off-Gas Filters	4.27
4.7	Sample of Porous Metal Filter Taken at the Failed Area	4.29
4.8	Sample of Porous Metal Filter Taken 4 to 5 Inches Below the Failed Area	4.30
4.9	Melter Temperatures During Run SS-5	4.35
4.10	Melter Temperatures During Run SS-4	4.36
4.11	Solids Addition System	4.38
4.12	Top View of Freeze-Valve Cooling-Coil Assembly	4.41
4.13	Continuous Melter, Melter Furnace and Freeze-Valve Cooling-Coil Assembly	4.42
5.1	WSEP Auxiliary Process Equipment	5.2
5.2	WSEP Process Mode Options	5.4
5.3	Operating Mode Applications in a Reprocessing Plant	5.6
5.4	Accumulation of Ruthenium in WSEP Auxiliaries	5.11
5.5	Ruthenium Volatilization from the WSEP Auxiliary Evaporator	5.14
5.6	Typical Acid Fractionator Operating Conditions	5.16

5.7	Typical Scrubber Operating Conditions	5.23
6.1	Temperature Drop (Centerline to Outside Wall) in Receiver Pots Containing Spray Solidified Waste	6.5
6.2	Pot Wall Temperatures in Air and in Air-Cooled Receiver Pot Furnace	6.6
6.3	Heat Required in a Cylindrical Pot to Attain a 900 °C Centerline Temperature	6.8
6.4	Product Frozen Wall Thickness for 8-Inch Thermal Maximum Pots (Receiver Pots Filled to Obtain a Hypothetical 900 °C Centerline When Stored in Water)	6.13
6.5	Radiation and Temperature Profiles of Receiver Pots Filled with Spray Solidified Waste Product	6.16
6.6	^{137}Cs Leach Rates for Radioactive PW-1 and PW-2 Spray Solidified Waste	6.20
6.7	^{144}Ce Leach Rates for Radioactive PW-1 and PW-2 Spray Solidified Waste	6.22
6.8	Leach Test Equipment for Solidified Waste Samples	6.23
7.1	Fission Product Heat Generation Rate with Time for One Tonne of Reactor Fuel Irradiated to 20,000 MWd/tonne at 15 MW/tonne	7.3
7.2	Heat-Age Environment Relationships for High-Level Radioactive Spray Solidified Waste Showing Fission Product Heat Rate Density Limits	7.5
7.3	Typical Flowsheet for Processing One Tonne of PW-1 Waste with Mode A Operation	7.6
7.4	Typical Flowsheet for Processing One Tonne of PW-2 Waste with Mode A Operation	7.8
9.1	Equipment Arrangement for Mode A Spray Solidification Runs	9.37
9.2	Equipment Arrangements for Modified Mode B Spray Solidification Runs	9.38
9.3	WSEP Auxiliary Equipment Flow Diagram	9.39

9.4 WSEP Solidification Equipment Flow Diagram 9.40

9.5 Schematic Diagram of Ventilation System for Process Off-Gases 9.41

TABLES

2.1	Spray Solidification Runs in WSEP	2.3
3.1	Chemical Compositions of High-Level Liquid Wastes for WSEP Demonstration	3.10
3.2	Chemical Additives Used in the Spray Solidifier Process	3.12
3.3	Results of Preliminary Radioactive In-Cell Laboratory Tests with Adjusted Spray Solidifier Feeds	3.13
4.1	Major Demonstration Run Variables	4.2
4.2	WSEP Spray Solidifier Processing Rates	4.4
4.3	Receiver Pot Temperatures Caused by Internal Heat Generation	4.6
4.4	Volume Reductions	4.11
4.5	Ruthenium Volatilization from the Spray Solidifier	4.14
4.6	Spray Calciner Operating Parameters	4.18
4.7	Feed Nozzle Operating History	4.20
4.8	Entrainment from the Spray Solidifier	4.26
4.9	Melter Operating Parameters	4.34
4.10	Summary of Waste Composition Ranges	4.45
4.11	Spray Solidification Equipment Operating History Through Run SS-6	4.47
5.1	Typical Effluents During Mode A Operation	5.8
5.2	Decontamination Factors for Radioactive Ruthenium and Cerium	5.12
5.3	Nitrogen Balance for First Six Spray Solidification Runs	5.22
5.4	WSEP Auxiliary Equipment Operating Summary (Through Spray Solidification Run SS-6)	5.26

5.5	Overall Material Balances for Spray Solidification Runs	5.31
6.1	Thermal Maximum Heat Generation Rates for Receiver Pots Containing PW-1 Spray Solidified Waste	6.11
6.2	Thermal Maximum Heat Generation Rates for Receiver Pots Containing PW-2 Spray Solidified Waste	6.11
6.3	Receiver Pot Fill Data	6.19
6.4	Receiver Pot Welding, Leak Test, and Pressure Data	6.25
7.1	Fission Products from a Power Reactor Fuel Exposed to 20,000 MWd/tonne at 15 MW/tonne	7.2
7.2	Projected Radionuclides in Fractionator Acid Per Tonne of Equivalent Fuel Processed	7.14
7.3	Projected Radionuclides in Distillate from the Acid Fractionator Per Tonne of Equivalent Fuel Processed	7.14
9.1	Nominal and Actual Feed Compositions Used in Spray Solidification Runs SS-1 Through SS-6	9.29
9.2	Operating Parameters and Results of Spray Solidification Demonstrations for Runs SS-1 Through SS-6	9.30
9.3	Material Balances for Spray Solidification Runs SS-1 Through SS-6	9.32
9.4	Distribution of Radioactivity for Spray Solidification Runs SS-1 Through SS-6	9.33
9.5	Average Centerline Temperature in the First Six Spray Solidification Pots	9.34
9.6	Average Wall Temperatures for the First Six Spray Solidified Waste Pots	9.34
9.7	Average Centerline-to-Wall Temperature Differences for the First Six Spray Solidified Pots	9.35
9.8	Feed Pump Experience During WSEP Demonstration Runs	9.36

WASTE SOLIDIFICATION PROGRAM
VOLUME 6
SPRAY SOLIDIFICATION PERFORMANCE DURING FIRST RADIOACTIVE TESTS IN WASTE SOLIDIFICATION ENGINEERING PROTOTYPES

W. R. Bond, J. N. Hartley, J. E. Mendel,
J. L. McElroy, K. J. Schneider and M. R. Schwab

1.0 INTRODUCTION

During chemical reprocessing of spent nuclear fuels, essentially all of the fission products are accumulated as aqueous wastes. Traditionally, these "high-level" wastes have been stored in large, underground tanks. Since many of the nuclides will constitute a potential hazard for centuries,* storage in tanks is considered a temporary or interim approach. More permanent disposal methods which improve isolation of these hazardous nuclides are being developed to help realize the full benefits of nuclear power.

Responsible authorities in the United States and abroad generally agree that the best management approach involves converting the wastes to inert, refractory solids before storage. Such solids can then be isolated from human environment by storage in man-made vaults of high integrity or in geologically remote formations such as rock salt.

A considerable amount of development on techniques for solidification of high level wastes has taken place in the past 14 years and is still progressing. Four processes for solidification of high level liquid wastes have been developed in the USA to the point of radioactive demonstrations on an

---

* This is true for many fission product radionuclides; for some of the transuranic radionuclides, the potential hazard exists for thousands of centuries.

engineering scale. The four processes are pot calcination, spray solidification, phosphate glass solidification, and fluidized bed calcination. Two waste solidification methods under development abroad include the FINGAL process in the United Kingdom and a pot vitrification process in France.

Such a diversity of effort reflects differences in needs for solidification when considering the chemical complexity of the many types of wastes to be processed, the different scales of operation required, and the different criteria set for the final solidified waste products. In view of these factors, no single process is expected to be optimal for all applications.

Fluidized bed calcination was the first solidification process placed in routine radioactive operation. In this application, aluminum-bearing wastes from enriched uranium fuels have been processed at the Idaho Chemical Processing Plant (ICPP) by the Idaho Nuclear Corporation since 1963.

Pot calcination (developed by Oak Ridge National Laboratory), spray solidification (developed by Battelle-Northwest), and phosphate glass solidification (developed by Brookhaven National Laboratory), are being demonstrated at the Pacific Northwest Laboratory on an engineering scale with full radioactivity levels for the Atomic Energy Commission. The purpose of this waste solidification demonstration program is to provide the technological bases which will lead industry to adopt and implement at the earliest possible time the practice of solidifying the high-level liquid waste which results from the reprocessing of nuclear fuel. Battelle-Northwest in cooperation with Oak Ridge National Laboratory and Brookhaven National Laboratory is carrying out this demonstration program in the Waste Solidification Engineering Prototype (WSEP).

The WSEP is a pilot plant that was designed to provide information necessary for technical, economic, and safety

evaluations of the pot, spray, and phosphate glass processes. A detailed description of the WSEP and the Chemical and Material Engineering Laboratory facility has been previously reported.[1] An up-to-date summary of the technology of the pot spray and phosphate glass solidification processes has also been reported recently.[2]

This report presents results and analyses of the first 6 radioactive demonstration runs with the spray solidification system in WSEP. (Similar results for the first 6 radioactive demonstrations with the pot calcination system in WSEP were reported in reference 3, and for the phosphate glass system were reported in reference 4.) Also included are results of the performance of the associated auxiliary equipment and measurements on the solidified waste. Where pertinent, results are compared to previous nonradioactive data. Detailed descriptions of each demonstration run are presented in the Appendix.

REFERENCES FOR INTRODUCTION

1. K. J. Schneider and V. P. Kelly. Waste Solidification Program, Volume 2, Design Features of the Waste Solidification Engineering Prototype, BNWL-968. Battelle-Northwest, Richland, Washington, February 1969.

2. Waste Solidification Program, Volume 1, Process Technology-Pot, Spray and Phosphate Glass Solidification Processes, K. J. Schneider, Editor, BNWL-1073. Battelle-Northwest, Richland, Washington, August 1969.

3. J. L. McElroy, C. R. Cooley, J. E. Mendel, W. V. DeMier, J. C. Suddath and J. O. Blomeke. Waste Solidification Program, Volume 4, Pot Calcination Performance During the First Radioactive Tests in Waste Solidification Engineering Prototypes, BNWL-814. Battelle-Northwest, Richland, Washington, December 1968.

4. J. L. McElroy, J. N. Hartley, K. J. Schneider and R. F. Drager (BNL). Waste Solidification Program, Volume 5, Phosphate Glass Solidification Performance During the First Radioactive Tests in the Waste Solidification Engineering Prototypes, BNWL-1185. Battelle-Northwest, Richland, Washington, November 1969.

2.0 SUMMARY

Solidification of high level aqueous radioactive wastes containing approximately 7.8 million curies was successfully completed in six demonstration runs using the spray solidification process in the WSEP. Major accomplishments in the demonstrations were as follows:

- Heat generation from fission products produced temperatures in the solidified waste near the maximum contemplated for the process as prescribed in WSEP. Adequate heating and cooling control of the pots was demonstrated during filling to promote uniform filling and prevent excessive temperatures.
- Aqueous radioactive wastes were solidified and encapsulated in the mild steel and stainless steel containers without pressurization or distortion of the container.
- Gases passing off from the auxiliary effluent treatment equipment and the facility to the atmosphere contained sufficiently low quantities of radionuclides to easily meet government regulations.
- Aqueous effluents (the fractionator distillate and bottoms) from the auxiliary effluent treatment equipment contained sufficiently low quantities of radionuclides to permit recycle to a fuel reprocessing plant; however, improved cleanup of these streams is desirable to improve the efficiency of their reuse.

2.1 SPRAY SOLIDIFIER PERFORMANCE

The principal variables investigated in the first six runs were the heat generation rate in the solidified waste and two waste types.

Radioactivity levels were increased from about 83,000 curies (which represents a heat generation rate of 330 watts) in the receiver pot in the first run to 3,000,000 curies

(11,000 watts! in the sixth run. The escalation of radioactivity in the waste did not appear to significantly affect the process in any way.

High level aqueous radioactive wastes simulating sulfate-free PW-1* and sulfate-containing PW-2* compositions were processed at overall rates of 11 to 18 liters/hr. The equivalent processing rates for PW-1 waste ranged from 0.72 to 0.9 tonnes/day of power-reactor fuel exposed to 20,000 MWd/tonne** at a power level of 15 MW/tonne, while for PW-2 waste, the processing rate ranged from 0.46 to 0.53 tonnes/day. In general, the lower equivalent processing rates for PW-2 waste were caused by the larger quantity of additives required to process the PW-2 waste.

The radioactive waste used for these demonstration runs did not always permit preparation of feeds having exact PW-1 and PW-2 compositions. Because of the modest variations in chemical compositions of the feeds, the overall volume reduction factors varied from 11.1 to 13.5 for PW-1, and were about 6.0 for PW-2 waste, based on aqueous waste at 378 liters/tonne. Expected volume reduction factors for nominal PW-1 and PW-2 wastes are calculated to be 11.3 and 6.0, respectively. The lower volume reduction of PW-2 waste is caused by a larger quantity of additives required to process the waste.

Although the design of the spray solidification system in WSEP is certainly not optimized, its performance was quite satisfactory after several process and equipment problems were resolved. General conditions for each run are summarized in Table 2.1.

---

* For detailed chemical compositions see Appendix Table 9.1.

** Tonne is used throughout this report to represent a metric ton (1000 kilograms) of uranium plus plutonium in the original fuel.

TABLE 2.1. Spray Solidification Runs in WSEP

Run	Waste Type	Receiver Pot Diam, in.	Receiver Pot Material	Radioactivity Processed, MCi	Heat Generation Rate in Receiver Pot Total, kW	Heat Generation Rate in Receiver Pot Density, W/liter	Equivalent Tonnes to Receiver Pot Actual	Equivalent Tonnes to Receiver Pot 100% Fill[a]	Equivalent Age[b] of Waste, years
SS-1	PW-1	12	304L SS	0.08	0.33	7.5	1.3	3.6	45
SS-2	PW-1	8	304L SS	0.42	2.1	44	1.7	2.2	3.6
SS-3	PW-2	8 and 12	304L SS	0.42	1.0[c]	34	0.45[c]	0.93[c]	2.1
SS-4	PW-2	8	Mild Steel	1.4	5.1	91	0.9	0.95	0.8
SS-5	PW-1	8	304L SS	2.5	8.2	127	2.0	1.8	1.2
SS-6	PW-1	8	304L SS	3.0	11.0	168	1.9	1.8	0.8

a. The equivalent tonnes of waste actually collected normalized to a fill height of 6 feet in the receiver pot.

b. Out-of-reactor time for fuel (irradiated to 20,000 MWd/tonne at a power level of 15 MW/tonne) with the same heat generation rate.

c. For the 8-in. diameter pot only.

Initially, the deposition of partially dried calcine on the walls and at the bottom of the spray calciner drying chamber was significant. The use of an internal-mix atomizing feed nozzle in place of the original external mix-nozzle significantly improved the atomization of the feed to the point where solids deposition was reduced to an acceptable level. Difficulties were also experienced initially because (1) vent capacity was insufficient to maintain proper vacuum in the solidifier during blow-back of the off-gas filters and (2) the pressure drop across the solidifier off-gas filters was too high. However, after a reduction in the flow resistance of the off-gas system and a reduction in the number of filters blown back at a time, the solidifier vacuum and the filter pressure drop were maintained at an acceptable level.

The batch discharge of melt from the melter made possible the filling of unheated receiver pots with either PW-1 or PW-2 solidified waste without stalagmite formation. This technique also permits the use of mild steel receiver pots for either waste.

The amount of ruthenium that volatilized from the solidifier ranged from 11 to 75% of the total amount fed to the solidifier. Control of ruthenium volatilization to consistently low values remains to be demonstrated. Cesium was the only other volatile fission product noted, and it only volatilized 0.1 to 0.3%. Normally the off-gas filters decontaminated the solidifier off-gas of particulates to less than 0.1% of the nonvolatile radioactivity in the feed. However, failure of the off-gas filters on one occasion did result in 10% of the calcined waste accumulating with the solidifier condensate. During processing of sulfate containing PW-2 wastes, less than 7% of the sulfate was volatilized from the solidifier.

2.2 AUXILIARY PROCESS SYSTEMS PERFORMANCE

The WSEP auxiliary system (the decontamination equipment which is located downstream of the solidification system to decontaminate the effluent stream from the solidifier) consists of a solidifier condenser, evaporator, mist eliminator, evaporator condenser, acid fractionator, fractionator condenser, high efficiency filter and scrubber. This system decontaminates the effluent from the WSEP solidification processes and separates the effluent into streams of cleaner nitric acid, water, and noncondensable gases. The WSEP auxiliary system is similar to high level waste evaporation and acid recovery systems in many fuel reprocessing plants.

The overall cumulative decontamination factors for radioruthenium from the original aqueous waste through the auxiliary system to the recovered nitric acid in the fractionator were typically 10^2 to 10^3. Comparable ruthenium decontamination factors to the recovered water (fractionator distillate) were typically 10^4 to 10^5. Comparable decontamination factors (DF) for nonvolatile radionuclides were about 10^5 for the recovered nitric acid and about 10^7 for the recovered water. DF's from original high level waste to the stack gas were greater than 10^{10} and 10^{12} for ruthenium and gross beta (less ruthenium), respectively.

The cumulative decontamination factor (DF_c) across the auxiliary evaporator (the ratio of ruthenium in the evaporator at the end of the run to ruthenium evolved from the evaporator during the entire run) varied from 73 to 890 under a variety of operating conditions. Sugar added to the evaporator during Runs SS-1, 2 and 6 at 0.17 to 0.77 moles/hr apparently did not help decrease ruthenium volatilization from the evaporator, since the rate of accumulation of radioruthenium in the acid fractionator remained the same with or without the sugar.

Instantaneous ruthenium DF's (DF_i, ratio of the ruthenium concentration in evaporator bottoms to the ruthenium concentration in evaporator distillate) generally vary inversely with the nitrate ion concentration in the evaporator bottoms and the nitric acid concentration in the overheads; however, during the six demonstration runs there was no apparent correlation with overhead acidity. The DF_i's were typically about 10^3 (during processing with aqueous feed on to the solidifier) and jumped to greater than 10^4 with all auxiliaries operating but with no feed on to the solidifier. The generally low DF_i's for ruthenium are attributed to vapor phase flow of ruthenium which is inefficiently scrubbed in the solidifier condenser and the auxiliary evaporator, and again inefficiently scrubbed by the evaporator condenser. The 10 to 20 scfm of noncondensible gas flow from the solidifier is believed to have adversely affected the scrubbing efficiency and increased the entrainment. The DF_i's for nonvolatile radionuclides across the evaporator and its glass fiber mist eliminator varied from 10^3 to 10^4. The final process off-gases to the stack were well below the discharge limits for both ruthenium and gross beta radioactivity.

Ruthenium DF_c's across the acid fractionator (ratio of ruthenium fed to the fractionator during a run to the ruthenium gained in the fractionator distillate receiver during the run) varied from 47 to 2000 but were typically 100 to 300. Comparable nonvolatile DF_c's across the acid fractionator varied from 110 to 3200 but were typically less than 1000.

The final aqueous process effluent (fractionator distillate) and the scrubber bottoms contained ruthenium concentrations which were above the 10CFR20 release limit by factors as high as 100,000. However, these effluent streams could probably be reused or recycled in a fuel reprocessing plant.

The mathematical model of the WSEP auxiliary off-gas system using a diffusion model for the solidifier condenser suggested that the inadequately scrubbed ruthenium leaving in the solidifier condenser off-gas has a greater influence on DF's across the evaporator and fractionator than does the smaller quantity of volatilized or entrained ruthenium from the evaporator and fractionator. The model suggests that the scrubber in the auxiliary system upstream of the high efficiency filter may not be ideally suited for removal of ruthenium. The use of improved gas-liquid contact equipment such as a condenser filled with efficient packing for gas removal and a high efficiency filter for particulate removal should substantially improve the ruthenium DF's for the auxiliary equipment. Such equipment changes are planned for the next series of spray solidification runs.

Handling of PW-1 and PW-2 spray solidifier feeds caused no unexpected operating problems in the feed tanks and the auxiliary evaporator. The primary solid in these wastes is a zirconium phosphomolybdate compound. This material is a hydrous, amorphous precipitate which has never been observed to cake in laboratory tests, even after several months of standing.

Although some minor malfunctions of auxiliary equipment occurred, no serious problems arose. These equipment problems, which can be eliminated by suitable design modifications, included:

- Feed pump failures
- Plastic insulation on electrical and instrument wiring which had deteriorated from radiation exposure
- High efficiency filters in the feed tank vent system which had failed repeatedly in these early runs because the filter preheater did not adequately dry the gases upstream of the filter.

2.3 FILLED POT PERFORMANCE

Although it is too early to evaluate the near-term (approximately 5 years) performance of pots filled with spray solidified waste product, current observations are encouraging. No pressurization has occurred during the 0.5 to 2.0 years of storage in any of the six pots, and no gas generation within the spray solidified waste product is indicated. Leak checks made on two receivers indicate good welds. (Leak checks have not been made on the remaining four receivers.) No significant changes were detected in the external dimensions of any of the six receivers within the accuracy of the remote in-cell measurements which was within ±0.25 inch for the pots of Runs SS-1 and SS-2 and within ±0.025 inch for the pots of Runs SS-3 through SS-6.

Heat generation rates in filled receiver pots were satisfactorily measured in a calorimeter. The maximum centerline temperature at the end of a run measured 770 °C for the receiver pot of Run SS-6. The maximum wall thickness measured was 460 °C for the SS-6 receiver. Thermal conductivities of the spray solidified waste products in the six receivers ranged from 1.1 to 1.4 $W/(m^2)(°C/m)$ [0.54 to 0.81 $Btu/(hr)(ft^2)(°F/ft)$].

Leach rates based on ^{137}Cs and ^{144}Ce were measured for grab samples from Runs SS-2, 4, 5, and 6. After 8 weeks, the leach rates for PW-2 spray solidified waste based on ^{137}Cs and ^{144}Ce were about 10^{-3} $g/(cm^2)(day)$ and about 10^{-6} $g/(cm^2)(day)$, respectively, and the leach rates remained nearly constant. The leach rates for PW-1 spray solidified waste based on ^{137}Cs and ^{144}Ce were about 10^{-5} $g/(cm^2)(day)$ and about 10^{-7} $g/(cm^2)(day)$, respectively, and the leach rates continued to decrease with a ten-fold decrease in the leach rates after 32 weeks. The leach rates for the radioactive waste samples agreed, in general, with the leach rates based on sodium for simulated, nonradioactive waste samples. All waste samples

were leached in distilled water at room temperature. The high leachability of the PW-2 spray solidified waste is attributed to the presence of sulfate in this waste product.

Gross radiation profiles indicate that the fission products are probably uniformly distributed. The measurements, however, cannot be interpreted quantitatively. Bulk densities of the product compared closely with measured densities in Runs SS-4, SS-5, and SS-6, thereby indicating the absence of voids. The bulk densities of the products for the other receivers were not available for comparison.

Although wall thickness measurements have not yet been made on the pots, no visible external corrosion is evident on stainless steel receivers stored in air or in water or an mild steel pots stored in water containing corrosion inhibitors or stored in air,

Automatic tungsten inert gas (TIG) welding of the receiver pot sealcap produced good fusion welds in all 6 pots. The welding head was positioned remotely over a step-type weld joint. Visual observation through a spotting scope outside the cell window was satisfactory enough to control the welding torch.

2.4 STATUS OF SPRAY SOLIDIFICATION

Although the spray solidification demonstration runs are not all complete, the six runs made to date permit a projection of expected performance of the process. A fission product heat generation rate of 220 to 250 W/liter is the maximum for a solidified PW-1 waste in an 8-inch diameter receiver pot (when stored in 38 °C air) when the WSEP restriction of limiting the product temperature to 900 °C is considered. The maximum heat generation rate for solidified PW-2 waste in an 8-inch diameter receiver pot is 200 to 220 W/liter (when stored in 38 °C air). This rate takes into consideration the WSEP

restriction of limiting the molten core radius to not more than 1/2 the receiver radius. Therefore, PW-1 and PW-2 wastes from light water reactor fuels irradiated to 20,000 MWd/tonne at a power level of 15 MW/tonne can be solidified within 0.5 to 0.6 and 0.25 to 0.3 years out of the reactor, respectively.

Some individual nuclides (e.g., ruthenium) were not at the levels expected for a 20,000 MWd/tonne at 15 MW/tonne exposure. However, data from these radioactive runs can be used to project results for full levels of all nuclides. By applying the overall decontamination factors experienced to date, several general conclusions can be made about the expected operation of the solidifier, the auxiliary evaporator, and the fractionator during processing of full level radioactive wastes:

- From 11 to 75% of the ruthenium will be volatilized from the solidifier to the evaporator during processing of PW-1 and PW-2 wastes containing phosphoric acid as a melt forming flux. Most of this can be recycled to the fuel reprocessing plant high level waste system. Less than 1% of the total ruthenium will reach the fractionator. During solidification of waste aged 0.5 years, the ruthenium concentration in the undiluted distillate effluent from the acid fractionator will be a factor of 20,000 to 5,000,000 times higher than the discharge limits quoted in 10CFR20. Ruthenium-106 is the nuclide in the final aqueous effluent with the highest concentration ratio to the limits in 10CFR20, followed by ^{90}Sr and ^{144}Ce-Pr. In general, an additional decontamination factor of 10^4 to 10^6 is needed to reduce all nuclides in the fractionator condensate to below 10CFR20 values. However, since approximately 200 to 300 liters of total condensate is generated per tonne of fuel processed (from 450 liters per tonne waste), the fractionator condensate could be used

in a fuel reprocessing plant as makeup water. Alternately, the condensate could be given additional low level treatment such as distillation to reduce the radioactivity level to 10CFR20 concentration limits for discharge of the water to the environment.

- The concentrated nitric acid produced in the acid fractionator (approximately 150 to 200 liters of 8 to 10M acid) will contain 900 to 9000 μCi/mℓ of total radioactivity for each tonne of fuel processed. Radioruthenium will be the principal contaminant. The acid would be acceptable for reuse for fuel dissolution in fuel reprocessing. (Fuel dissolution requires at least 1000 liters of 10M nitric acid per equivalent tonne, or 5 to 6 times that available from solidification of the wastes.)
- The solidifier product from acidic wastes will have a volume of 33 to 63 liters per tonne of spent fuel for the two types of Purex wastes. The smaller volumes will represent PW-1 wastes. These volumes represent 5 to 9.5 liters/1000 MWd_e.*

Demonstration runs in WSEP showed that the spray solidification process, at capacities in the range of 0.5 to 0.9 tonnes of fuel per day, is nearly ready for application as an industrial method of solidifying wastes. Remaining investigations suggested in WSEP include:

- Demonstration runs at higher radioactivity content to determine the true maximum acceptable heat generation rate (i.e., the maximum exposure level of the fuel and the minimum age of the wastes).
- Solidification of two other waste types likely to be encountered in the future nuclear power economy. One

* Assuming 33.3% thermal efficiency.

waste should be typical of a low salt, high fission product waste from thermal reactor fuel (exposed to 45,000 MWd/tonne at 30 MW/tonne) produced by "clean" Purex reprocessing (i.e., low iron, low sodium, and no sulfate). The other waste should represent spent core fuels from Liquid Metal Fast Breeder Reactors. Demonstration of these wastes should reasonably well complete the bracketing of the majority of wastes that can be predicted at this time.

- Demonstrate control of volatilization of ruthenium from the solidifier to more consistent and lower values.
- Demonstrate the in-pot melting concept (wherein the spray calcined waste is melted directly in the final storage container) with one of the waste types.

After the above tests are completed and reported, further reports will relate spray solidifier performance to the other two solidification processes under demonstration in WSEP from technical, operational, and economic viewpoints.

3.0 BACKGROUND, PROCESS DESCRIPTION AND PROCESS TECHNOLOGY

3.1 BACKGROUND

The WSEP spray solidification process evolved directly from the initial tests of radiant-heat spray calcination for radioactive waste solidification which started at Hanford in 1958.[1] The tests were part of a comprehensive program sponsored by the U. S. Atomic Energy Commission to develop safer methods for perpetual storage of highly radioactive wastes. Other solidification processes investigated in the United States as part of this program included the agitated trough calciner,[2] the ceramic sponge process,[3] the rotary ball kiln calciner,[4] the fluidized bed calciner,[5] the pot calciner,[6] and the phosphate glass process.[7] The latter three processes have been developed until they are essentially ready for some commercial applications.[8,9,10] With the successful completion of the series of WSEP demonstration runs described in this report, the spray solidification process is also nearly ready for commercial application.

In the early developmental period, a melter was close-coupled to the radiant heat spray calciner. The resulting spray calciner-melter, or spray solidifier as it is now called, produced melts which solidified to microcrystalline monoliths rather than the granular particles or friable calcines produced in the rotary ball kiln, agitated trough, fluidized bed and pot calcination processes. Thus the spray solidifier process joins other melt-forming high-level waste solidification processes, such as the phosphate glass process of Brookhaven National Laboratory, the English Fingal process,[12] and the French pot vitrification process.[13]

The spray solidifier was tested exhaustively in small hot cells,[14] in a cold pilot plant,[15] and in design verification tests[16] before the WSEP runs were started.

Spray solidification of radioactive wastes is also being investigated in other countries. A 10-inch diameter unit has been constructed in India.[17] A 24-inch diameter unit will be used for the first pilot-plant studies of waste solidification in Germany.[18] Spray solidification of radioactive wastes has also been described by Russian workers.[19]

3.2 PROCESS DESCRIPTION

In the spray solidification process, liquid waste is continuously converted to a dried powder by spray calcination. The powder is melted in a continuous melter, and the molten waste is discharged into a receiver which is also the final storage container. Additions of melt-forming chemicals are required. The additions are made either to the liquid waste prior to calcination, to the melter directly, or sometimes at both locations. The most common and usually the simplest procedure is to add the melt-forming chemicals to the liquid waste prior to calcination. The other procedures are modifications of the basic spray solidification process used to achieve special results. For instance, when the melt-forming chemicals are added after calcination for certain melt formulations it is sometimes possible to add them directly to the receiver. This is the in-pot melting modification of the spray solidification process in which the melter is removed from the system and the melt is formed directly in the receiving pot.

The principal equipment items used in spray solidification are:

- A spray calciner.
- Filters for removing fines from the off-gas.
- A melter.
- A pot for receiving the molten waste.
- Furnaces for heating the calciner and melter, and heating and cooling the solidified waste.

The liquid waste (plus chemical additives) is fed through a pneumatic atomizing nozzle into the top of the spray calciner. (Figure 3.1) The atomized waste is sequentially evaporated, dried, and calcined to a powder as it falls through the cylindrical calciner barrel. Type 310 stainless steel is a satisfactory construction material for the calciner because of its generally superior resistance to process corrosion and to high temperature air oxidation. The maximum operating temperature for the walls of the calciner barrel is limited by the tendency of the calcine to sinter and stick to the walls at higher temperatures. Typically, the wall temperature is held at or near 700 °C during operation.

Effective operation of the spray calciner depends upon good atomization.[20] The atomizing nozzle must break up the feed solution into small enough droplets (on the order of 50 to 100 micrometers diameter) to permit drying and calcining of the feed during its short time (about 10 seconds) in the calciner barrel. Commercial internal-mixing nozzles, wherein the atomizing gas and the feed solution are mixed inside the nozzle before being discharged, have proven superior to external-mixing nozzles. Air has generally been used as the atomizing gas. Superheated steam has also been used but has not consistently provided adequate atomization.

The product from the spray calciner is a fine powder (particles range from less than one micrometer to 100 micrometers in diameter). About half of the calcine powder tends to be entrained with the off-gases. Separation from the off-gases is effected by porous stainless steel filters with an average pore size of 65 micrometers. A total filter area of about 1 ft^2/(liter)(hr) of feed to the calciner is required to keep the filter pressure drop at the reasonable maximum level of 10 inches of water. Periodic pulsed blowbacks (every 1 to 5 minutes) with air at 30 to 60 psig pressure in the

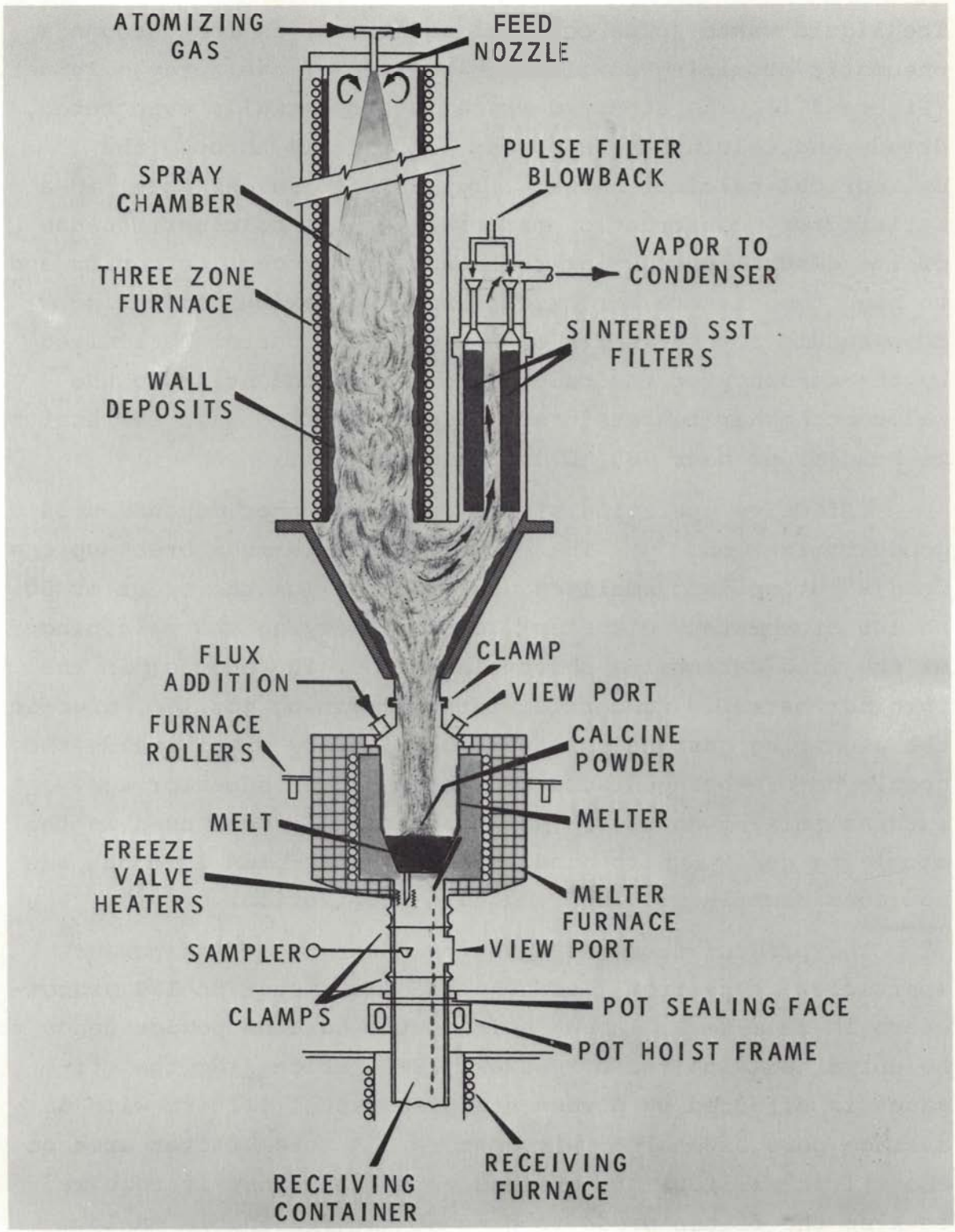

Neg 0660170-5

FIGURE 3.1. Spray Solidification Equipment

reverse direction through venturis into the filters removes the powder collected on the filters.

The continuous melter is positioned below the calciner to collect the powder as it falls from the calciner. Here the powder from the calciner and filter blow-back is combined and melted. The small amount of residual nitrate and water remaining in the calcine are driven off during melting and combined with the calciner off-gases in the calciner. Platinum is presently the only known reliable construction material for processing phosphate type melts. (When processing borosilicate type melts, as is done in the spray-in-pot melting scheme, both 304-L and 310 stainless steels are satisfactory for the in-pot melting step.) A chromium-alumina cermet appears promising at temperatures up to 1100 °C. A special alloy of 50% chromium-50% nickel is generally satisfactory at temperatures up to 1000 °C. High chromium/nickel stainless steel and some high-nickel alloys are satisfactory up to 900 °C.[21] Platinum has been used extensively at temperatures up to 1250 °C. Platinum has a low radiant emissivity which requires increased melter surface area or increased furnace temperature to obtain a given melting capacity.

The molten waste in the melter can be discharged continuously via an overflow wier, or batchwise using straight-tube freeze valves wherein a plug of melt about 2 inches long is melted or frozen to provide on-off control. Both techniques have been demonstrated in WSEP. The latter technique has the advantage of permitting encapsulation of more radioactive waste with decreased corrosion of the receiving vessel, although it causes minor upsets in process vacuum during the drain period.

In WSEP, the pot into which the molten waste is cast is a steel cylinder, 6 to 12 inches in diameter and 8 feet long. The diameter of the pot is usually determined by the radioactive

heat generation rate in the solidified waste. The pots may be constructed of mild or stainless steel, the choice depending upon the method used to fill the pot or the melting characteristics of the waste. Pots of mild steel may be used if the pot is filled with melt by large, rapid, batchwise dumps from the melter, or if the melt has a melting point less than about 700 °C. Solidified waste products with melting points up to about 950 °C can be collected in stainless steel receiving pots with either filling technique. Level measurements are required in the pot and may be accomplished by direct viewing or approximated by temperature measurement. The pot is located in a 6-zone heating and cooling furnace so that the top of the melt may be heated to assure complete filling without formation of stalagmites or voids. Because of the significant amount of heat generation from radioactive decay, it is frequently necessary to begin forced air cooling of the lower regions of a pot while the upper regions are being heated for their filling. In WSEP, the pots are filled until about 2 feet of freeboard remains, at which time the filled pot is removed for final sealing by a welded closure and for post-fill tests.

Most of the solidified waste formulations from the spray solidification process, as developed by Battelle-Northwest, are phosphate melts. They are tough, monolithic microcrystalline solids which can contain over 25 wt% mixed fission product oxides. The thermal conductivities of the microcrystalline products are usually 20 to 30 percent greater than true glasses with the same fission product content.

Up to 75% of the ruthenium can be volatilized during spray solidification with the phosphate flowsheet. Most of the volatilization occurs during calcination, a much smaller amount from the melt. The ruthenium can be recycled except for a very small fraction which is apparently noncondensible and must be filtered. Volatility of fission product cesium and rubidium has not been significant during spray solidifier runs.

3.3 PROCESS TECHNOLOGY

High level radioactive wastes from aqueous reprocessing plants are primarily nitrate solutions of fission products and various nonradioactive constituents. In order to form a stable solid for long-term storage, the relatively volatile nitrate ions must be completely removed and a melt-forming matrix substituted which is stable at high temperatures. In the spray solidification process developed by Battelle-Northwest, phosphate is generally used as the melt former. Although other melt formers have been considered, particularly boric oxide and silica, they have been used less frequently than phosphates. When phosphate is added to the radioactive waste solution, a soft, flocculent, easily-suspended precipitate is formed which can be easily pumped. The precipitates formed by borate and silica are more difficult to keep homogeneously suspended in the feed solution and, in the case of silica, cause severe wear of pumps, meters, and valves. In general, phosphate melts have a larger latitude of chemical composition than borate or silicate melts. For instance, sulfate can be incorporated in homogeneous phosphate melts; in borate or silicate melts, sulfate separates as a lighter phase. The primary disadvantages of phosphate melts is that they are more corrosive than borate or silicate melts.

The spray solidifier concept requires that the sintering point of the calcined feed be higher than the temperature of the calciner walls. Otherwise, the calcine can stick on the calciner walls and reduce heat transfer efficiency. In practice, the sintering temperature, or "stick point," of the calcine should be above about 700 °C to permit reasonable operating rates. In addition, it is desirable that the melting point of the final product be below about 950 °C to permit flexibility in techniques of filling the steel receiving vessel without excessive corrosion.

The temperature limits for the spray solidifier product can be readily obtained using phosphate flux with an overall cation-to-phosphate ratio corresponding to the compositional range between pyro and ortho phosphate, i.e., with an M^+/P ratio of 2 to 3, when the proper cation mixture is present. The M^+/P ratio is the method adopted in the WSEP program by Battelle-Northwest to express the relationship of total metal ion equivalents to phosphorus in a given solution or product. In this relationship, M^+ is the total metal ion equivalent present, and is obtained by multiplying the total moles of each metallic element by its assumed valence in the system. Molybdenum and silicon are arbitrarily assumed to exist as the anions MoO_4^{-2} and SiO_3^{-2}. Their equivalent value is therefore subtracted from the total metal ion equivalents. The value for P is the total molarity of phosphorus present.

As the M^+/P ratio is lowered, the product become more glass-like. (The phosphate glass process developed by Brookhaven National Laboratory operates at an M^+/P ratio of one and produces a true glass as product.) Early operating experience indicated that the more glass-like melts were difficult to handle in the spray calciner due to a tendency to form sticky deposits on the calciner walls and glazes on the stainless steel off-gas filters. Equipment improvements have helped alleviate these problems. Feed solutions with M^+/P ratios as low as 1.8 have been processed successfully, and it may be possible to process solutions with even lower M^+/P ratios. In the opposite direction, an M^+/P ratio of about 3.0 may be considered the upper limit. Melts with M^+/P ratios much above 3.0 are usually undesirably nonhomogeneous.

In addition to adding phosphoric acid to obtain the desired M^+/P ratio, feed adjustment usually involves cationic additions to obtain optimum melt properties. (Of course it is the final M^+/P ratio that is important and additional

phosphoric acid is required for any cationic additions made.) Generally, cationic additives are needed to lower the melting point. Sodium and lithium added as the nitrate or hydroxide are most effective for this purpose, and an equimolar mixture of sodium and lithium has been found to be more effective than either element by itself. Cationic additions may also be made to enhance other melt properties, such as homogeneity, durability, or sulfate retention.

In the first six spray solidifier runs made in WSEP, two typical but very different waste compositions were used which required very different additive formulations. In Runs SS-1, 2, 5 and 6, Purex Waste No. 1 (PW-1) was processed, and in Runs 3 and 4, Purex Waste No. 2 (PW-2) was processed. Both wastes are typicalof those which will result from the reprocessing of thermal power reactor fuels irradiated to 20,000 MWd/MT at 15 MW/MT. Nominal compositions for PW-1 and PW-2 are shown in Table 3.1. PW-1 represents a Purex waste solution containing a large amount of iron which results when an iron canister is used to transfer chopped fuel elements from the mechanical head-end to the dissolver, and the canister is codissolved with the fuel. PW-2 represents a Purex sulfate-containing waste solution high in sodium content and relatively low in other inert salts. The sulfate content of PW-2 comes from decomposition of ferrous sulfamate and sulfamic acid, used as reducing agents for plutonium in the only commercial separations plant currently operating in the United States.

The waste solutions used for the WSEP runs were prepared by blending high level waste (IWW) from the Hanford Purex plant, concentrated fission product solutions (mainly rare earths with Cerium-144) from the Hanford Fission Products Processing Plant, and inert chemicals, to approximate the nominal PW-1 and PW-2 compositions as closely as possible. Except for a significant amount of aluminum that was unavoidably

TABLE 3.1. Chemical Compositions of High-Level Liquid Wastes for WSEP Demonstration

Constituent	Concentration, Molarity at 378 liters/tonne[a] PW-1	PW-2
General Chemical Composition of Inert Materials		
Na	low	high
Fe	high	med
SO_4	0	high
Actual Chemical Composition of Inert Materials		
H	3.7	3.9
Fe	0.93	0.44
Cr	0.012	0.024
Ni	0.005	0.010
Al	0.001	0.001
Na	0.14	0.93
U	0.010	0.010
Hg	<0.001	<0.001
NO_3	7.5	5.4
SO_4	---	0.87
PO_4	0.003	0.006
SiO_3	0.010	0.010
F	<0.001	<0.001
$\sum M^+_{chem}$ [b]	3.03	2.48
kg oxide/tonne	38.7	28.1[c]

Chemical Composition of Major Materials from Nuclear Fission

Constituent	Fuel Exposure in Thermal Reactors 20,000 MWd/tonne at 15 MW/tonne
Mo	0.065
Tc	0.014
Sr	0.015
Ba	0.019
Cs	0.035
Rb	0.007
Y + RE[d]	0.12
Zr	0.065
Ru	0.032
Rh	0.007
Pd	0.017
Ag	0.0008
Cd	0.0008
Te	0.006
Sn	0.0007
Sb	0.0002
$\sum M^+_{fP}$ [b]	0.91
kg oxide/tonne	22.0

a. Tonne is a metric tonne, 1000 kg or 2205 lb.
b. M^+ is metal equivalents, or normality of metal ions (does not include acid).
c. Does not include the sulfate. If sulfate is not volatilized, approximately 27 kg/tonne of additional oxides are formed.
d. RE is rare earth elements.

introduced at the Purex plant, the actual waste compositions used in the WSEP runs were quite close to the compositions desired (see Table 4.10). The aluminum contaminant, which is not expected to be present in significant amounts in commercial reprocessing wastes, was treated as if it were iron, that is, $Fe_{actual} + Al_{contaminant} - Fe_{nominal}$. It was found that if the aluminum concentration was over about 25% that of the iron, the temperature at which the melt fused was increased.[22]

Chemical substitutions were used for several of the fission products which were too expensive, or impossible to obtain in the amounts required. Molybdenum was substituted for technetium, nickel for palladium, cobalt for rhodium, and copper for silver and cadmium. Although the process behavior of ruthenium is of extreme importance, it was impractical to use the full amount present in the nominal waste compositions. Approximately 10% of the nominal concentration was added as inert $Ru(NO_3)_3$; iron or manganese was substituted for the remainder of the ruthenium.

Melts for processing PW-1 and PW-2 in the spray solidifier were made by the addition of phosphate and other additives. For PW-1, sodium and lithium were added to lower the melting point. For PW-2, the maximum temperature was kept below 900 °C at all times during processing, and calcium and aluminum were added for additional sulfate complexing to minimize volatilization of sulfate from the melt. To achieve the low melt temperature and yet keep the walls of the spray calciner clean, a portion of the flux was added directly to the melter (as solid $NaPO_3$) rather than to the aqueous feed solution. The additives used in the PW-1 and 2 flowsheets are shown in Table 3.2. The factors involved in the development of these flowsheets are described in detail in Reference 22.

TABLE 3.2. Chemical Additives Used in the Spray Solidifier Process

Additives	Waste Type: Moles per Liter of Waste at 100 gal/tonne PW-1	PW-2
NaOH	0.5	---
LiOH	0.5	1.17
$Fe(NO_3)_3$	---	---
$Ca(NO_3)_2$	---	0.6
$Al(NO_3)_3$	---	0.25
H_3PO_4	1.74	1.61
$NaPO_3$	---	1.27 (in melter)
	(M/P = 2.75)	(M/P = 2.7)
Product Composition		
Oxide wt%		
Fission Products	18	10
Waste Inerts	30	28
Melt Forming Additives	52	62

In addition to extensive nonradioactive development tests, in-cell verification tests were made on each batch of actual feed prior to each WSEP demonstration run. The results of these tests determined the suitability of the feed for processing in the spray solidification process. Stick-point,* melting point, corrosiveness of the melt, and visual product characteristics were noted in laboratory scale tests. The results of these tests are shown in Table 3.3.

* Defined as the temperature at which the calcined feed had a tendency to sinter and stick to a metal surface.

TABLE 3.3. Results of Preliminary Radioactive In-Cell Laboratory Tests with Adjusted Spray Solidifier Feeds

WSEP Run	SS-1	SS-2	SS-3	SS-4	SS-5	SS-6
Feed Type	PW-1	PW-1	PW-2	PW-2	PW-1	PW-1
Heat generation rate in feed, W/liter	0.55	2.5	4.8	11	9.3	11
Suspended solids, vol%	100	Not available	94	75	100	19
Corrosiveness of melt to pot material	No visible corrosion of 304-L SS coupon after 25 hr at 925 °C	No significant corrosion of 304-L SS coupon after 25 hr at 950 °C	No visible corrosion of 304-L SS coupon after 24 hr at 750 °C	Not determined	No visible corrosion of 304-L SS coupon after 30 hr at 850 °C	No visible corrosion of 304-LL SS coupon after 24 hr at 850 °C
Product Appearance	Not available	Gray, homogenous, crystalline solid	Grayish crystalline solid, possibly a little porous	Dull grey-green, homogenous, crystalline solid	Dull black, homogenous, crystalline solid	Shiny black, homogenous, solid
Stick Point, °C	Not determined	Not determined	800	>820	750	800
Initial melting point, °C	850	900 to 925	900 (calcine only) 700 (calcine + $NaPO_3$)[a]	750-775 (calcine + $NaPO_3$)[a]	850-900	950

a. 1.27M $NaPO_3$ for feed at 378 liters/tonne

REFERENCES FOR SECTION 3

1. R. T. Allemann and B. J. Johnson. "Radiant Heat Spray Calcination Process for Solidification of Radioactive Waste," Ind. Eng. Chem., Process Design and Develop., vol. 2, no. 3, July 1963.

2. Reactor Fuel Processing, vol. 2, p. 42. January 1959.

3. C. W. Christenson. "The Ceramic Sponge Process," Symposium Report of the Third Working Meeting on Calcination and/or Fixation at High Level Wastes in Solid, Stable Media at Washington, D. C., TID-7646. Division of Technical Information Extension, Oak Ridge, Tennessee, February 1962.

4. R. P. Domish and L. P. Hatch. Continuous calcination of High Level Radioactive Wastes by Means of a Rotary Ball Kiln, BNL-832 (T-326). Brookhaven National Laboratory, Upton, Long Island, New York, November 1963.

5. D. R. Evans. Pilot Plant Studies with a Six-Inch Diameter Fluidized Bed Calciner, IDO-14539. Phillips Petroleum Company, Idaho Falls, Idaho, April 1961.

6. J. M. Holmes, R. E. Blanco, J. O. Blomeke, W. W. Clark, H. W. Godbee, C. W. Hancher, J. C. Suddath and M. E. Whatley. "Pot-Calcination Process for Converting Highly Radioactive Wastes to Solids," Treatment and Storage of High-Level Radioactive Wastes. Proceedings of the Symposium Held by the International Atomic Energy Agency in Vienna, Austria, October 1962.

7. R. F. Drager, L. C. Emma, T. J. Fedelum, L. P. Hatch, G. Strickland, E. J. Tuthill and G. G. Weth. Development of the Phosphate Glass Process for Ultimate Disposal of High Level Radioactive Wastes, BNL-50130 (T-505). Brookhaven National Laboratory, Upton, Long Island, New York, January 1968.

8. R. E. Commander, G. E. Lohse, D. E. Black and E. C. Cooper. Operation of the Waste Calcining Facility with Highly Radioactive Aqueous Waste: Report of the First Processing Campaign, IDO-14662. Phillips Petroleum Company, Idaho Falls, Idaho, June 1966.

9. J. L. McElroy, C. R. Cooley, J. E. Mendel, W. V. DeMeir, J. C. Suddath and J. O. Blomeke. Waste Solidification Program, Volume 4, Pot Solidification Performance During the First Radioactive Tests in WSEP, BNWL-814. Battelle-Northwest, Richland, Washington, December 1968.

10. J. L. McElroy, J. N. Hartley, K. J. Schneider and R. F. Drager. Waste Solidification Program, Volume 5, Phosphate Glass Solidification Performance During First Radioactive Tests in Waste Solidification Engineering Prototypes. BNWL-1185. Battelle-Northwest, Richland, Washington, October 1969.

11. Reactor Fuel Processing, vol. 5, no. 3, p. 59. July 1962.

12. J. R. Grover, W. H. Hardwick, R. Gayler and M. H. Delve. "The FINGAL Process," Symposium on the Solidification and Long-Term Storage of Highly Radioactive Wastes, February, 1966, Richland, Washington, CONF-660208, pp. 427-445. Available from Division of Technical Information Extension, Oak Ridge, Tennessee. November 1966.

13. F. Laude. "Pot Vitrification of Concentrated Fission Product Solutions," Symposium on the Solidification and Long-Term Storage of Highly Radioactive Wastes, February, 1966, Richland, Washington, CONF-66028, pp. 222-233. Available from Division of Technical Information Extension, Oak Ridge, Tennessee. November 1966.

14. R. T. Allemann, F. P. Roberts and U. L. Upson. Solidification of High-Level Radioactive Fuel Reprocessing Wastes by Spray and Pot Calcination - Hot-Cell Pilot Plant Studies. HW-83896. Available from Clearinghouse for Federal Scientific and Technical Information, Springfield, Virginia, September 1964.

15. J. D. Kaser and J. D. Moore. "The Development of a Spray Calciner-Melter," Proceedings of the Symposium on the Solidification and Long-Term Storage of Highly Radioactive Wastes, February 14-18, 1966, Richland, Washington. Edited by W. H. Regan, CONF-660208, pp. 326-374. Available from Division of Technical Information Extension, Oak Ridge, Tennessee. November 1966.

16. J. D. Moore. Waste Solidification Engineering Prototypes, Design Verification Testing of Spray Solidification Equipment, BNWL-1117. Battelle-Northwest, Richland, Washington, July 1969.

17. R. C. Rostogi, J. D. Sehgal, K. Chandra and K. T. Thomas. Investigation of Materials and Methods for Fixation of Low and Medium Level Radioactive Waste in Stable Solid Media Final Report, B. A. R. C. - 400. Bhabha Atomic Research Centre, Bombay, India, 1969.

18. W. Defenbacher and W. Guber. Unpublished Data. Karlsruhe, Germany, July, 1969. (Personal Communication)

19. N. E. Brezhneva. YU. N. Golovanov, S. N. Oziraner, A. A. Eremine and V. N. Rozanova. "Solidification of Radioactive Waste Solutions," AEC-tr-6171. Translated from Treatment and Storage of High-Level Radioactive Wastes, Proc. Sym., Vienna, October 8-12, 1962, pp. 441-464, 1963.

20. J. D. Kaser. Evaluation of Atomizing Nozzles for the Spray Solidification of Radioactive Waste, BNWL-1066. Battelle-Northwest, Richland, Washington, June 1969.

21. R. F. Maness. "Corrosion Behavior of Materials for High Temperature Melt Processing." Quarterly Progress Report, Research and Development Activities, Fixation of Radioactive Residues, August-October, 1968, edited by A. M. Platt, BNWL-923. Battelle-Northwest, Richland, Washington, December 1968.

22. Waste Solidification Program, Volume 1, Process Technology, Pot, Spray, and Phosphate Glass Solidification Processes, K. J. Schneider, Editor, BNWL-1073. Battelle-Northwest, Richland, Washington, August 1969.

4.0 SPRAY SOLIDIFICATION PERFORMANCE

Six radioactive test runs have been completed in WSEP to demonstrate the spray solidification process. A major objective was to increase the concentrations of radionuclides in the waste in each successive run to permit prediction of the maximum allowable heat generation rate in a receiver pot. Other objectives included determination of the performance of the spray solidification process coupled with the auxiliary equipment. Major variables of the demonstration runs are shown in Table 4.1.

Engineering-scale performance of the spray solidification process with highly radioactive waste generally confirmed earlier development work.[1,2,3,4,5] The capacities of the equipment and the distribution of radionuclides in the solidifier condensate were in the range indicated by nonradioactive and radioactive work at PNL; however, a higher average percentage of the ruthenium in the feed was volatilized (11 to 75% versus 5 to 20%) from the solidifier than in the earlier laboratory-scale radioactive tests.[2]

Initially the deposition of partially dried calcine on the walls and at the bottom of the drying chamber was significant. The use of an internal-mix atomizing nozzle in place of the original external-mix nozzle significantly improved the atomization of the feed to such a point that solids deposition was reduced to an acceptable level. Difficulties were also experienced initially with excessive pressure drop across the solidifier off-gas filters and insufficient vent capacity to maintain proper vacuum in the solidifier during blow-back of the off-gas filters. However, after a reduction in the number of filters undergoing simultaneous blow-back and a reduction in the flow resistance of the off-gas system, it was possible to maintain the filter pressure drop and the solidifier vacuum

TABLE 4.1. Major Demonstration Run Variables

Run	Mode[a]	Pot Diam, in.	Waste Type	Radioactivity Processed, Ci	Equivalent Tonnes Processed	Heat Rate Density, W/tonne	Equivalent[b] Age, y
SS-1	A	12	PW-1	83,000	1.3	220	45
SS-2	Bm[c]	8	PW-1	420,000	1.7	1230	3.6
SS-3	A	8 & 12	PW-2	420,000	0.6	2300	2.1
SS-4	A	8	PW-2	1,400,000	0.9	5730	0.8
SS-5	A	8	PW-1	2,500,000	2.0	4190	1.2
SS-6	A	8	PW-1	3,000,000	1.9	5710	0.8

a. See Figure 5.2 for WSEP Operating Modes.

b. Out-of-reactor time for fuel with the same heat generation rate. Based on fuel exposed to 20,000 MWd/tonne at 15 MW/tonne.

c. A modified Mode B (see Section 5).

at acceptable levels. Normally, the off-gas filters decontaminated the solidifier off-gas of particulates to less than 0.1% of the nonvolatile radioactivity in the feed. However, the failure of the off-gas filters on one occasion did result in 10% of the calcined waste accumulating with the solidifier condensate.

The discharge of melt batchwise from the melter made possible the filling of unheated receiver pots with either PW-1 or PW-2 solidified waste. The solidification of PW-1 and PW-2 wastes during the first six radioactive demonstrations produced products with heat generation rates as high as 168 W/liter in an 8-inch-diameter pot.

4.1 OVERALL PROCESSING RATES

Overall processing rates (based on feeding time to the solidifier) ranged from 0.72 to 0.9 tonne/day for PW-1 wastes and from 0.46 to 0.53 tonne/day for PW-2 wastes. These rates represent the production of solidified waste products of 20 to 30 liters/day for PW-1 and from 30 to 33 liters/day for PW-2. Table 4.2 summarizes the data on processing rates.

The general factors affecting processing rates were only qualitatively investigated. In general, the limiting factors affecting the processing rate are the transmission of heat into the calciner to produce a dry free-flowing calcine and the transmission of heat into the melter to produce a fluid melt. These in turn are influenced by the feed composition, feed atomization, and furnace temperatures. The processing rate for PW-2 waste was limited by the melter at about 35 liters/day of melt (equivalent to 13 liters/hr of feed to the calciner with waste at 570 liters/tonne). The processing rate for PW-1 waste is probably limited by both the calciner and melter at about 20 to 25 liters/hr of feed to the calciner. This is equivalent to approximately 40 liters/day of melt with waste at 450 liters/tonne.

TABLE 4.2. WSEP Spray Solidifier Processing Rates

	Aqueous Feed					Solidified Product				Overall Processing Rate[a]		
			Volume,			Volume,					Solidified Waste	
Run	Type	Heat Rate Density, W/liter	liters/tonne	liters	Feeding Time, hr	liters/tonne	liters	Fuel Equivalents, tonne	Heat Rate Density, W/liter	Feed, liters/hr	liters/day	tonne/day
SS-1	PW-1	0.55	455	603	37	29	38	1.3	7.5	16	25	0.84
SS-2	PW-1	2.5	455	789	57	28	48	1.7	44	14	20	0.72
SS-3	PW-2	4.8	582	357	32	64	39	0.6	36	11	30	0.46
SS-4	PW-2	11	560	500	40	63	56	0.9	91	12	33	0.53
SS-5	PW-1	9.3	446	887	53	33	66	2.0	127	17	30	0.90
SS-6	PW-1	11	521	986	56	34	65	1.9	168	18	28	0.82

a. Based on actual feeding time to solidifier.

4.2 RADIONUCLIDE HEATING EFFECTS

Since the high concentrations of radionuclides in high-level solidified wastes will produce high internal temperatures even when the receiver pot is cooled, the maximum allowable temperatures must be determined. The temperatures depend on the concentration of radionuclides in the solid product (the irradiation history of the fuel and the age of the waste), the receiver size, the thermal conductivity of the solid product, and the cooling environment in which the receiver is placed.

The maximum allowable temperatures established for WSEP are a product temperature of 900 °C and/or a receiver pot wall temperature of 427 °C; if a molten core exists in the receiver pot, the radius of the molten core must not exceed one-half the receiver pot radius. The 900 °C temperature limits possible corrosion to the stainless steel thermowells used to house the thermocouples at the centerline of the pots. (The wells will probably not be used in production model receiver pots.) The 427 °C wall temperature prevents excessive air oxidation of the container and allows remote handling of the pot without excessive special precautions. Limiting the molten core radius prevents molten waste from contacting the pot wall and thus reduces the corrosion potential.

The temperatures caused by the internal heat generation rate in the 6 pots are listed in Table 4.3. During the first radioactive demonstrations of the spray solidification process in WSEP, the internal heat-rate density was increased in each successive pot to 168 W/liter in Run SS-6. Because the PW-2 product has a relatively low remelt temperature of 700 °C, the maximum heat-rate density is limited by the molten core restriction to 200 to 220 W/liter for an 8-inch diameter receiver pot when stored in 38 °C air, while the maximum heat-rate density limit for the PW-1 waste product is 220 to 250 W/liter due to the 900 °C maximum product temperature.

TABLE 4.3. Receiver Pot Temperatures Caused by Internal Heat Generation

Run	Waste Type	Pot Diam., in.	Pot Material	Total Heat Rate, W	Total Heat Rate Density, W/liter	Type of Filling[a]	Pot Furnace Temperature[b], °C	Maximum Centerline Temperature During Filling, °C[c]	Steady State Centerline Temperature, °C[d]	Steady State Centerline-to-Wall Temperature Difference[d], °C
SS-1	PW-1	12	304L SS	330	7.5	65% continuous[e] 35% batch	800 to 850	1000	170	30
SS-2	PW-1	8	304L SS	2100	44	batch	800 to 850	1023	315	65
SS-3	PW-2	8 & 12	304L SS	1000[f]	34[f]	batch	680	800	315[f]	76[f]
SS-4	PW-2	8	Mild steel	5100	91	batch	off	800	305	220
SS-5	PW-1	8	304L SS	8200	127	batch	40% 840[e] 60% off	40% 1000[e] 60% ≤50	≤33	278
SS-6	PW-1	8	304L SS	11000	168	batch	off	970	7[illegible]	308

a. Continuous filling was accomplished by the continuous overflow of the melter weir (1 to 2 liters/hr). Batch filling was accomplished by periodic discharge of the melter in 4 to 6 liter batches (20 to 60 liters/hr) via the drain freeze-valve.

b. The furnace zone temperatures at and above the zone being filled. The furnace zones below these were turned off.

c. These maximum temperatures resulted immediately following a batch melt addition to the pot.

d. Receiver pot in the furnace with forced air cooling outside the susceptor.

e. Percentage of the run that specified condition applied. Information on top applies to first portion of run while that on bottom applies to last portion.

f. For 8-inch-diameter pot only.

While processing PW-1 waste during Runs SS-1, SS-2, and the first half of Run SS-5, the receiver pot furnace was held at 800 to 850 °C (i.e., the furnace zones at and above the zone being filled; the furnace zones below these were turned off). These furnace temperatures were used to avoid stalagmite formation in the receiver pot from rapid cooling of the entering melt which can occur with the low melt flow rates (approximately 1.2 liters/hr) encountered during continuous weir overflow discharge of the melter. Periodic batch discharge of the melt from the melter into the receiver pot was otherwise generally used because of the lesser potential for stalagmite formation at the higher entering melt rates (approximately 50 liters/hr); however, certain precautions are required to avoid a temperature excursion in the pot. For example, on occasion during Run SS-2, when the receiver-pot furnace was not turned off (i.e., the zone in which the melt was being discharged) at least several hours prior to the batch dump, the internal temperature in this zone temporarily surged to as high as 1025 °C. During the last half of Run SS-5 and all of SS-6, the receiver pots were not heated and they were filled successfully with PW-1 waste without stalagmite formation using batch filling. This technique also permits use of mild steel containers and the collection of solidified waste with a high heat-rate density such as that in Run SS-6.

Although a number of temporary surges of the internal pot temperatures occurred (increases in temperatures by approximately 700 °C for Run SS-6) when using this technique for filling the pots, the temperatures did not become excessive since the pot was relatively cool prior to the dump. Typical receiver pot temperatures during batch dumping of melt (in Run SS-6) are presented in Figure 4.1. Batch filling of an unheated receiver with PW-2 solidified waste was also demonstrated during Run SS-4.

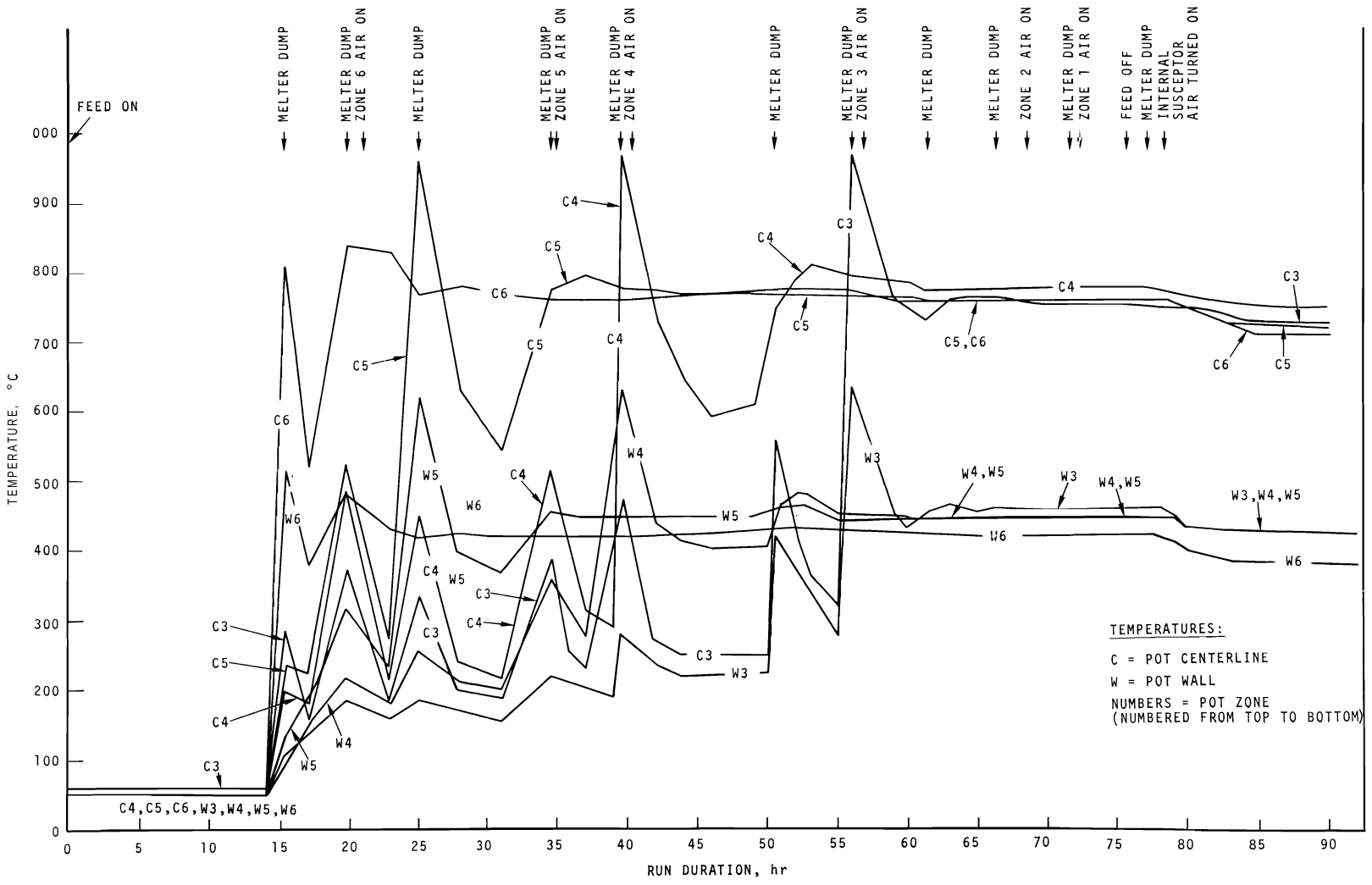

FIGURE 4.1. Receiver Pot Temperatures (Bottom Four Zones) During Run SS-6

Figure 4.2 is a schematic diagram which shows the location of the thermocouples in a receiver pot. Using one air blower rated at 275 scfm to cool the receiver pot was sufficient to maintain the steady state centerline temperature of the receiver pot contents below 780 °C and the steady state pot wall temperatures below 460 °C during Run SS-6 (which contained the highest heat-rate density of 168 W/liter tested to date). The cooling air blows onto the outside of and cools the furnace susceptor. The pot is cooled by radiation to the susceptor. Direct cooling of the pot wall (inside the susceptor) with 50 scfm of air was available but not used except in a test during Run SS-6. This added cooling decreased the average pot wall temperature 35 °C below that attained with external susceptor cooling only.

4.3 WASTE VOLUME REDUCTION

Because of the variations in chemical compositions of the waste processed during solidification, the overall volume reduction factors (the volume of aqueous waste at 378 liters/tonne to the volume of solidified waste product) varied from 6.0 to 13.5. Volume reduction factors are summarized in Table 4.4. Estimated values of volume reduction differed from observed values by 2% in Run SS-6 to a maximum of 15% in Run SS-1, with an average' difference of less than 9%. For the last two demonstration runs (Runs SS-5 and SS-6) with PW-1 . waste, the volume reduction averaged 11.3 and agreed with the average of the estimated values. During the first two runs (Runs SS-1 and SS-2), however, the volume reduction was higher at 13.0 to 13.5. These higher values were probably due to the addition of insufficient quantities of nonradioactive makeup and fluxing chemicals, and due to some holdup of product in the solidifier particularly in Run SS-1. During Run SS-4 where sulfate-containing PW-2 waste was processed, the volume reduction factor was 6.0. As a result of the early termination

POT SIZE	8 in.	12 in.
MATERIAL	MILD STEEL OR 304L SS SCH. 40 PIPE	MILD STEEL OR 304L SS 0.310 in. THICK
OD in.	8.625	12.0
ID in.	7.981	11.38
FILL HEIGHT, in.	72	72
FILL VOLUME, liters	60	120
THERMOWELLS		
CENTERLINE	3/4 in. SCH. 80 310 SS	
INTERMEDIATE	1/2 in. SCH. 80 310 SS	

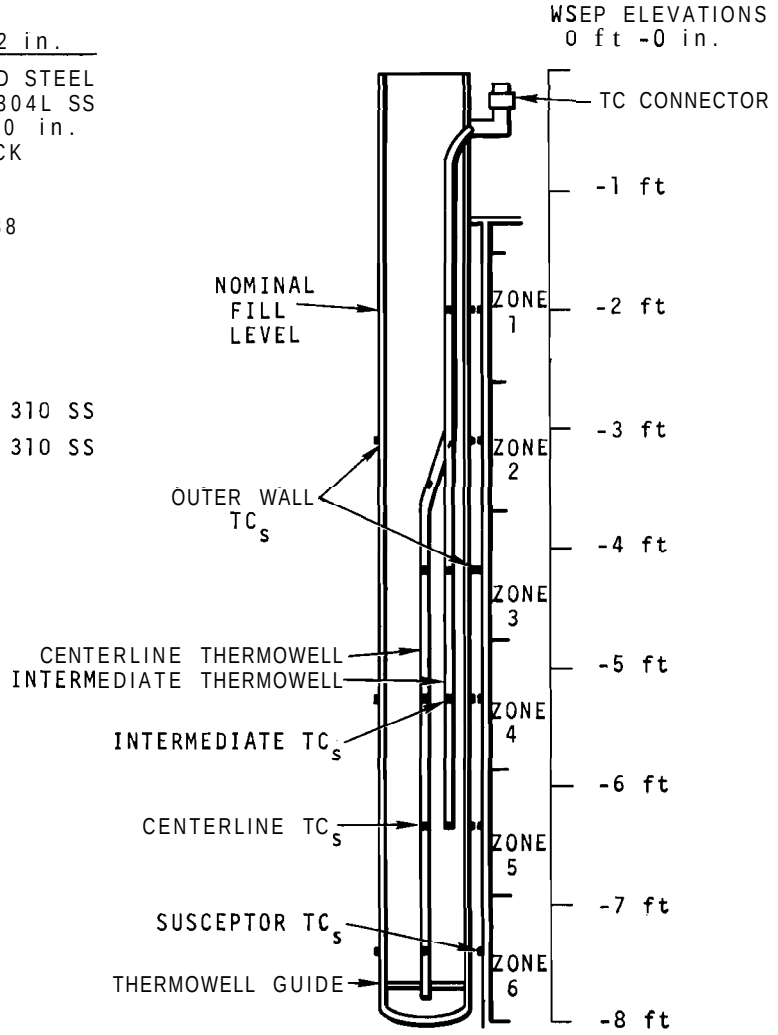

FIGURE 4.2. Thermocouple Arrangement of Spray Solidifier Receiver Pot

TABLE 4.4. Volume Reductions

Run	Waste Type	Overall[a] Volume Reduction Factor	Estimated[b] Volume Reduction Factor	Measured Density of Product, g/mR	Volume of Product, liters/tonne
SS-1	PW-1	13.0	11.0	3.15	29
SS-2	PW-1	13.5	11.6	3.19	28
SS-3	PW-2	---	6.0	2.70	64
SS-4	PW-2	6.0	5.7	2.80	63
SS-5	PW-1	11.5	11.8	3.24	33
SS-6	PW-1	11.1	10.9	3.18	34

a. Volume ratio of initial aqueous waste at 378 liters/tonne to the measured volume of the final solidified waste.

b. Based on laboratory-measured density of the product and the estimated total weight of the adjusted-waste oxides.

of Run SS-3, the volume of the melt was not measured in the receiver pot, and the volume of product was calculated from the laboratory-measured density and the estimated net weight in the pot. See Table 9.1 in the appendix for typical PW-1 and PW-2 waste compositions.

4.4 VOLATILIZATION OF FISSION PRODUCTS

An important objective during the six spray solidification runs was to characterize the path and behavior of volatile fission products which are present in the waste. During the six demonstration runs, ruthenium and cesium were the only fission products volatilized. Appreciable quantities of ruthenium were volatilized (11 to 76%) while cesium was only slightly volatilized (0.1 to 0.3%).

Most of the ruthenium that was volatilized during spray solidification was collected with the solidifier condensate in

the WSEP auxiliary evaporator or in the condensate receiver tank. The accumulation of ruthenium in the condensate is shown in Figure 4.3 as a function of the fraction of feed processed for the six demonstration runs.

While processing PW-1 waste during Runs SS-1, SS-2, SS-5, and SS-6, the ruthenium volatilized from the solidifier ranged from 50 to 75%, which was in good agreement with nonradioactive tests.[6] However, when processing PW-2 waste, 73% of the ruthenium was volatilized during Run SS-3 while only 11% of the ruthenium was volatilized during Run SS-4. Nonradioactive tests[7] had indicated that the percentage of ruthenium volatilized while processing PW-2 waste should be in the same range as that for PW-1 waste. Analysis of the solidified waste product from Run SS-4 could only account for 30% of the ruthenium, thereby leaving approximately 60% of the ruthenium unaccounted for; however, the analysis of the solidified waste product for ruthenium is known to be unreliable. The discrepancy in the ruthenium volatility for Runs SS-3 and SS-4 was not resolved.

It was determined during nonradioactive tests[6,7] with PW-1 and PW-2 wastes, that most of the ruthenium was volatilized during the spray calcination step rather than during melting. Applying this basis to the results of Run SS-3, only 3% of the 76% ruthenium accumulated in the solidifier condensate was associated with the 10% entrained calcine; therefore, 73% of the ruthenium processed during SS-3 was estimated to have been volatilized. Due to the relatively low entrainment from the solidifier during the other five runs, essentially all the ruthenium accumulated in the solidifier condensate was the result of volatilization. As shown in Figure 4.3, the volatilization rate of ruthenium was relatively constant during the course of a run, and was apparently unaffected by the multiple startups and shutdowns that occurred during several of the runs (SS-3, SS-4, and SS-6). Table 4.5 lists the ruthenium

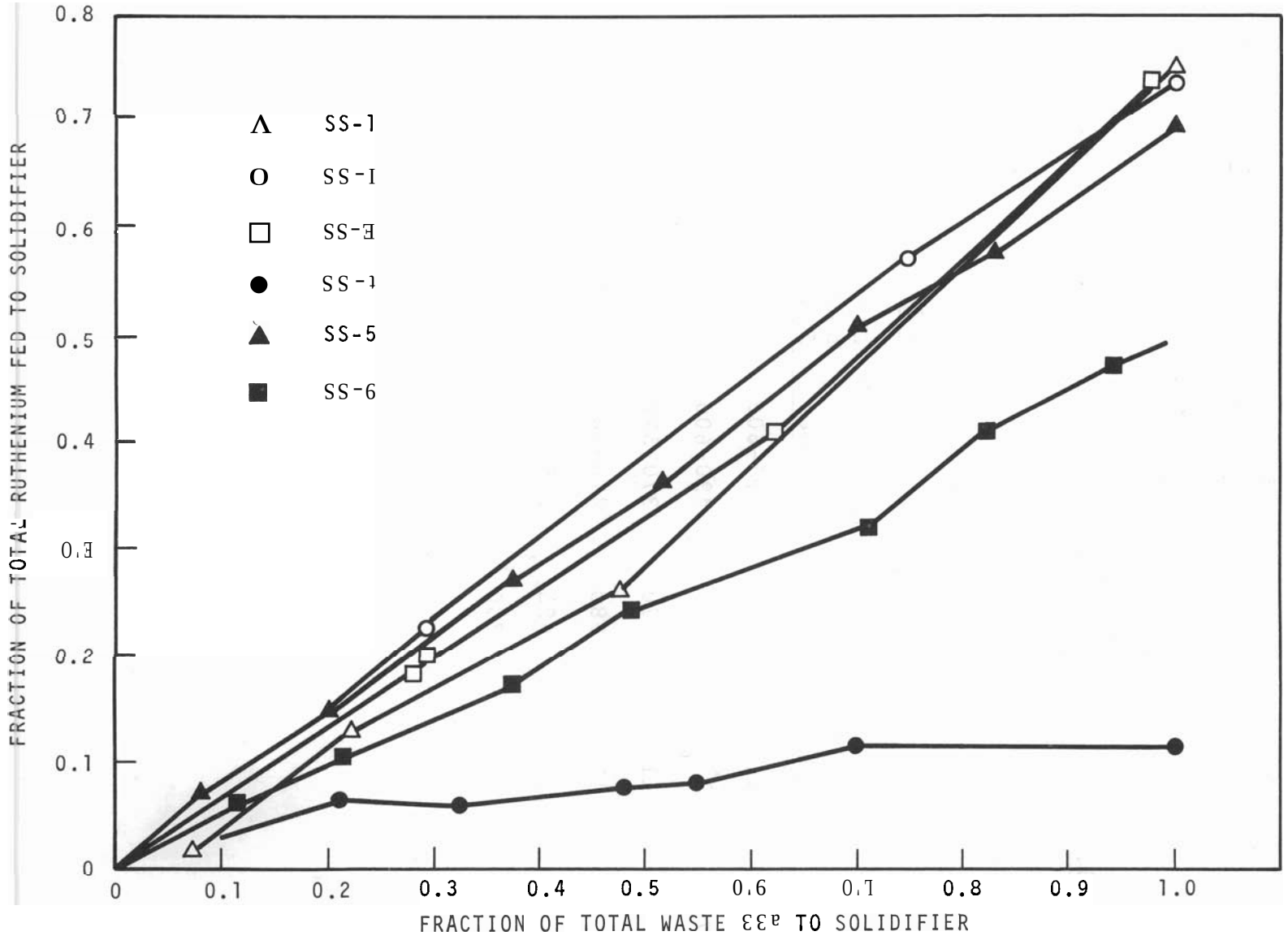

FIGURE 4.3. Accumulation of Ruthenium in Spray Solidifier Condensate

TABLE 4.5. Ruthenium volatilization from the Spray Solidifier

Run	Mode	Waste Type	Specific Feed Volume, liters/tonne	Waste Composition Including Additives[a]									Radioruthenium in Feed to Solidifier		Feed Rate to Solidifier, ℓ/hr	Calciner Temps., °C			Percent[d] Ruthenium Volatilized
				Na^+	Al^{+3}	Fe^{+3}	ΣM^+	H^+	NO_3^-	SO_4^{-2}	PO_4^{-2}	Ru	Total, Ci	Conc. Ci/liter		Furnace	Internal[b] Drying Chamber	Drying Chamber[c] Exit Gas	
SS-1	A	PW-1	455	0.606	0.059	0.79	4.07	2.9	5.1	0.008	1.48	0.0027	5,700	9.5	16	700	475-600	425	75
SS-2	Bm	PW-1	455	0.33	0.059	0.79	4.11	3.8	5.35	0.008	1.46	0.0021	5,300	6.7	14	700	490-600	470	74
SS-3	A	PW-2	582	0.59	0.20	0.267	3.94	2.73	4.28	0.56	1.04	0.0030	25,700	72	11	670	370-520	330	73
SS-4	A	PW-2	560	0.69	0.21	0.28	4.12	3.71	4.82	0.59	1.09	0.0014	15,300	31	12	680	410-560	350	11
SS-5	A	PW-1	446	0.57	0.16	0.64	3.99	4.47	5.43	0.003	1.42	0.0027	16,800	19	17	695	375-500	425	70
SS-6	A	PW-1	521	0.43	0.08	0.60	3.45	4.57	4.86	0.002	1.44	0.0028	24,000	24	18	700	325-460	390	50

a. Actual concentrations at time of processing.
b. Temperatures are measured near the drying chamber wall and range from top to bottom.
c. Temperature measured in conical bottom section of drying chamber.
d. Percent of total ruthenium fed to the solidifier.

volatilized from the solidifier along with other variables that could affect ruthenium volatilization.

The ruthenium volatilized from the spray solidifier (11 to 75%) while processing PW-1 and PW-2 wastes during the radioactive demonstration runs was appreciably higher than the 5 to 20% reported in earlier laboratory-scale radioactive tests[2] while processing similar Purex type waste. Aside from some differences in feed composition, the reduced ruthenium volatilization in the laboratory tests may have been partly caused by the higher calciner temperatures. The approximately 100 °C higher wall temperature and the higher ratio of heat transfer area relative to feed rate (factor of 3 to 4) used during these earlier tests probably resulted in internal calciner temperatures 100 to 200 °C higher than those shown in Table 4.5 for the spray solidification runs. A significant reduction in ruthenium volatilization from a fluid bed calciner was noted[8] as the operating temperature was increased (from 400 to 500 °C) and was attributed to the instability of ruthenium tetroxide at high temperatures.

Nonradioactive spray solidifier tests[9,10] with PW-1 and PW-2 wastes have indicated a decrease in ruthenium volatility as the feed acidity was decreased and when the phosphoric acid flux was not included in the feed. The decrease in ruthenium volatilization with a reduction in feed acidity has also been noted[11] for boiling waste solutions. The apparent effect on ruthenium volatilization due to the presence of phosphoric acid in the waste is not readily explained, since during the earlier laboratory-scale radioactive tests[2] its presence or nonpresence did not appear to have an effect. (Also, the presence of phosphate in the boiling concentrate of the phosphate glass solidification process is thought to decrease ruthenium volatilization below that which would occur from a similarly boiling concentrate without

phosphate.)[12] The unclear effect of phosphate on ruthenium volatilization is not surprising in view of the complexity of ruthenium chemistry.

A significant reduction of the ruthenium volatilized from the spray solidifier would probably be accomplished by neutralization of the feed or the addition of a chemical reductant (e.g., sugar) to the feed as done in the earlier laboratory-scale radioactive tests.[2] For example, sugar at 50 g/liter of feed was injected into the feed line during a nonradioactive developmental test with PW-1 waste, and the ruthenium volatilization was reduced from the normal 60 to 20%.[7]

An alternate approach to maximum suppression of volatilization would be to adapt a close-coupled scheme in which the volatilized ruthenium is scrubbed from the solidifier off-gas and recycled back to the solidifier feed. With this kind of scheme, ruthenium volatilization as high as that encountered in these demonstration tests could be tolerated if no operational difficulties (such as off-gas line plugs) were encountered, and if the gas scrubbing step was efficient enough to assure that intolerable levels of ruthenium did not result downstream of the scrubber.

During the demonstration runs, the quantities of cesium leaving the solidifier with the off-gas were generally higher than could be attributed to entrainment and indicated that cesium was volatilized in the range of 0.1 to 0.3%. The cesium volatilization was probably entirely from the melter since laboratory data on cesium volatility from phosphate melts[18] can more than account for the quantities of cesium released.

4.5 SPRAY CALCINER PERFORMANCE

Although some process and equipment difficulties were encountered, they were resolved so that the resultant spray calciner performance was quite satisfactory. Those items which influenced the performance of the process and equipment are discussed below. Pertinent overall spray calciner run parameters are presented in Table 4.6.

4.5.1 Calciner Feed System

The adjusted waste is pumped through a two-fluid pneumatic atomizing nozzle and sprayed into the top of the calciner.[13] Air was used as the atomizing gas during all six demonstration runs, since it had proved to be more reliable than steam during design verification[4] and nonradioactive tests.[6]

With the calciner at operating temperature and the atomizing air on at 40 to 45 psig, the spray calciner was started by feeding water at approximately 15 liters/hr. Water was fed to the calciner for 10 to 20 minutes to permit the calciner temperatures to level out. Feed was then slowly blended with the water over a 1- to 2-minute period until only waste was being fed and the water was off. The aqueous feed rate to the solidifier ranged from 11 to 12 liters/hr while processing PW-2 waste and 13 to 18 liters/hr while processing PW-1 waste. Processing rates are summarized in Table 4.2. Shutdown involved an immediate switch to feeding water for 20 to 30 minutes. The use of water during startup and shutdown avoided nozzle plugging problems which would result if feed was turned on directly to the hot nozzle or if the nozzle was not adequately flushed at the end of the run.

Excessive deposition of partially dried calcine in the conical outlet and on the walls of the calciner resulted in the premature termination of Run SS-1. The excessive deposition was attributed to inadequate atomization of the feed.

TABLE 4.6. Spray Calciner Operating Parameters

Run	Feed Type	Feed Temp, °C	Feed Time, hr	Feed Rate, liters/hr Average	Feed Rate, liters/hr Range	Average Calcination Rate, kg/hr[a]	Average Calciner Pressure, inches of water Normal	Average Calciner Pressure, inches of water During Blowback	Average Calciner Furnace Temp, °C
SS-1	PW-1	50	37	16	8-21	3.8	-10	0	700
SS-2	PW-1	29	57	13	12-22	3.0	-8	+2 (+4 max)	700
SS-3	PW-2	40	32	11	8-13	2.6	-12	0 (+5 max)	670
SS-4	PW-2	31	40	12	8-16	3.1	-8	-1	680
SS-5	PW-1	25	53	17	12-21	4.1	-11	-3	695
SS-6	PW-1	19	56	18	14-21	3.8	-10	-2	700

Run	Atomizing Air[b] Average Press., psig	Atomizing Air[b] Temp, °C	Atomizing Air[b] Average Flow, scfm	Off-Gas Filters Pressure Drop, in. of Water Start of Run	Off-Gas Filters Pressure Drop, in. of Water Maximum	Off-Gas Filters Pressure Drop, in. of Water End of Run	Off-Gas Filters Noncondensable Off-Gas Flow, scfm	Off-Gas Filters Filter Face Velocity, ft/min[c]	Off-Gas Filters Chamber Temp, °C	Off-Gas Filters Blowback Gas[d] Type	Off-Gas Filters Blowback Gas[d] Temp, °C	Off-Gas Filters Blowback Gas[d] Press., psig
SS-1	55	350	---	7.0	11.0	11.0	11	3.0	300	steam	345	26
SS-2	40	30-320	6.0	9.0	18.0	18.0	11	2.8	320	steam	350	20-33
SS-3	43	30	6.0	3.0	11.0	11.0	13	3.1	350	steam	350	27
SS-4	45	30	6.8	5.8	7.5	7.5	13	2.9	300	air	315	40
SS-5	40	∿30	8.6	4.0	6.5	5.4	17	4.2	340	air	350	40
SS-6	45	∿30	8.5	5.7	7.0	6.0	∿20	4.4	300	air	350	45

a. Estimated from feed analysis and the average feed rate to the solidifier.

b. An external-mix feed nozzle was used during SS-1 while an internal-mix nozzle was used during the remaining runs.

c. Gas temperature assumed the same as filter chamber temperature.

d. The filters were blown back three at a time during the first three runs and two at a time during last three runs.

Coarse spray droplets were produced which were not adequately dried prior to striking the hot walls or exiting the drying chamber.

Nozzle screening tests[14,15] were conducted to find a nozzle which performed better than the external-mix pneumatic atomizing nozzle (Spraying Systems Company Setup No. 5) used during Run SS-1. The tests resulted in the selection of an internal-mix nozzle (Spray Systems Company Setup No. 42) since it produced a spray with a significantly smaller median drop size and more uniform pattern. It was also the most compatible of the nozzles tested with existing WSEP equipment.

An internal-mix feed nozzle was used during the last five runs as shown in Table 4.7. The first internal-mix feed nozzle used during Run SS-2 performed satisfactorily but it was necessary to replace it prior to Run SS-3 because the cleanout needle became jammed and would not operate. The performance of the second internal-mix nozzle was satisfactory during Runs SS-3, SS-4, SS-5, and SS-6. The nozzle was replaced after SS-6 due to the presence of deposition in the calciner and increased nozzle air consumption which may have indicated erosion of the nozzle orifice. Erosion of the internal-mix nozzle orifice had been noted during nonradioactive tests,[7] and was particularly pronounced with PW-2 wastes and when using a preheated atomizing gas. The PW-2 waste was apparently more abrasive than PW-1 because the solids in PW-2 feed are more crystalline in nature while the PW-1 solids are essentially amorphorous. The feed nozzle was visually inspected after Run SS-6 and no extensive erosion was noted; however, it could not be concluded that erosion had not occurred, since the inspection was done remotely and the nozzle could not be examined internally, as done during nonradioactive tests.

TABLE 4.7. Feed Nozzle Operating History

Nozzle No.	Type	Runs Used	Feed on Time, hr	Comments
1	external-mix	SS-1	41	Was used 4 hr during a nonradioactive run prior to SS-1. The nozzle was replaced after SS-1 because of excessive deposition in calciner during SS-1
2	internal-mix	SS-2	106	Was used 49 hr during nonradioactive runs prior to SS-2. The nozzle was replaced prior to SS-3 because of a malfunctioning cleanout assembly
3	internal-mix	SS-3, SS-4, SS-5, SS-6	180	Was replaced after SS-6 because of deposition in calciner and indication of possible erosion of nozzle orifice.

After Run SS-6, 10 to 12 kilograms of deposited calcine were removed from the conical bottom section of the calciner below the drying chamber. The deposition was believed to have accumulated over the last five runs (the solidifier was flushed prior to Run SS-2) as a result of inadequate feed atomization caused by widely-varying, intermittent off-standard conditions of feed flow. The absence of deposition on the drying chamber walls indicated that atomization at the edge of the spray pattern was satisfactory. However, the center of the spray was apparently not adequately atomized to permit drying of the larger particles in the calciner. The result was a slow build-up of deposits on the bottom conical section of the calciner. This deposition probably occurred each time a significant increase in feed flow occurred (the median drop size from a pneumatic atomizing nozzle increases directly with increasing liquid-to-air volume ratio).[15] This experience points out the importance of relatively smooth control of atomizing gas and feed flow rates.

The feed flow control during all the runs was much less than adequate. The difficulties were due to the insensitivity of the magnetic flowmeter, the sensing element in the feed flow control loop, to changes in feed flow rate. The sensitivity problem occurred primarily because the 15 to 20 liters/hr feed rates desired for the spray solidifier are well below the lower range of the recommended operating range for the flowmeter. Although the flowmeter had the smallest tube diameter (3/16 inch) which would provide sufficient flow area to minimize plugging problems, the resultant fluid velocity was insufficient for good operation. This difficulty with feed flow control can probably be resolved by using other flowmeters or it will probably resolve itself in scaling up the process to the higher rates that will be encountered in most production-scale units.

The deposition noted in the calciner after Run SS-6 represented less than 2% of the calcine produced during the last four runs despite the poor feed control. Even with these feed conditions, the use of the internal-mix nozzle had reduced deposition to an acceptable level. Since the deposition encountered was all at the bottom conical section of the calciner, a simple built-in mechanical scraper could eliminate any down time for the deposition.

Due to the high salt and solids content of the feed, the high nozzle operating temperature, and the small diameter of the nozzle feed port (0.1 inch inside diameter), occasional plugs formed on the feed side of the nozzle. The formation of a plug was noted by a sudden drop in the feed flow to the calciner. The nozzle cleanout needle proved thoroughly effective in removing these plug formations when used before a complete stoppage of feed flow occurred. The atomizing air was preheated to approximately 300 °C during Run SS-1 and the early portion of Run SS-2; however, when the air was not preheated,

the occurrence of nozzle plugs was significantly reduced. Nonheated atomizing air was used during the remainder of the runs.

On one occasion (during Run SS-3) the air side of the nozzle became partially plugged after the atomizing air was shut off during a shutdown period. The plug was the result of inadequate flushing of the nozzle prior to turning off the atomizing air and residual feed dried in the hot nozzle. The nozzle had to be removed from the solidifier and given alternate flushes of nitric acid and sodium hydroxide to remove the plug. A system was later installed which will allow flushing of the air side of the nozzle while on the solidifier by adding small amounts of nitric acid directly to the atomizing air.

4.5.2 Drying Chamber

In general, all three zones of the calciner furnace were operated at approximately 700 °C while processing PW-1 waste and at 670 to 680 °C while processing PW-2 waste. Lower temperatures were used while processing adjusted PW-2 waste because of its tendency to sinter and stick at a temperature of 700 to 725 °C. The "stick point" of the adjusted PW-1 waste is about 800 °C. Excessive scaling of the heated drying chamber walls only occurred during Run SS-1 due to poor feed atomization as discussed previously. Scaling was minimal during the remaining five runs.

The net calciner heat requirements during processing ranged from 14 to 16 kilowatts, with about 40% of this used in each of the top two furnace zones. Due to the small hold up and short residence time (6 to 10 seconds) of the waste in the drying chamber, the contribution of the internal heat generation in the waste to the calciner heat requirements was negligible.

The internal wall temperatures of the calciner were useful indicators of operation by providing immediate response to changes in calciner feed flow which were not indicated by the feed flowmeter. This allowed early feed flow rate corrective action to be taken which would not have otherwise been possible if total reliance on the flowmeter or the dropout rate from the feed tank had been required, Although the temperatures in the top calciner zone ranged from 300 to 500 °C for the six runs, a temperature of 350 to 400 °C was about optimum for a feed rate of approximately 16 liters/hr. Typical calciner temperatures during processing of PW-1 waste (Run SS-5) and PW-2 waste (Run SS-4) are presented in Figures 4.4 and 4.5 respectively.

The free-piston, air-operated vibrator mounted on top of the calciner performed satisfactorily at dislodging calcine from the drying chamber walls during the six runs; however, some mechanical difficulties were experienced with it. It was necessary to replace it prior to Run SS-3 due to a stuck piston. During Run SS-4 the welds on the vibrator mounting broke loose from the top flange of the calciner. A technique for mounting the vibrator was improvised. The technique consisted of bolting a replacement vibrator to a heavy metal cylinder which fit over a dowel pin on the calciner flange and had sufficient weight to prevent the assembly from bouncing off the pin when the vibrator was operating. This technique proved satisfactory for the remainder of Run SS-4 and the remaining runs. It was necessary to replace the vibrator during Runs SS-6, however, because it quit vibrating. The vibrator was normally actuated for 2 seconds of every minute with an air supply pressure ranging from 40 to 60 psig.

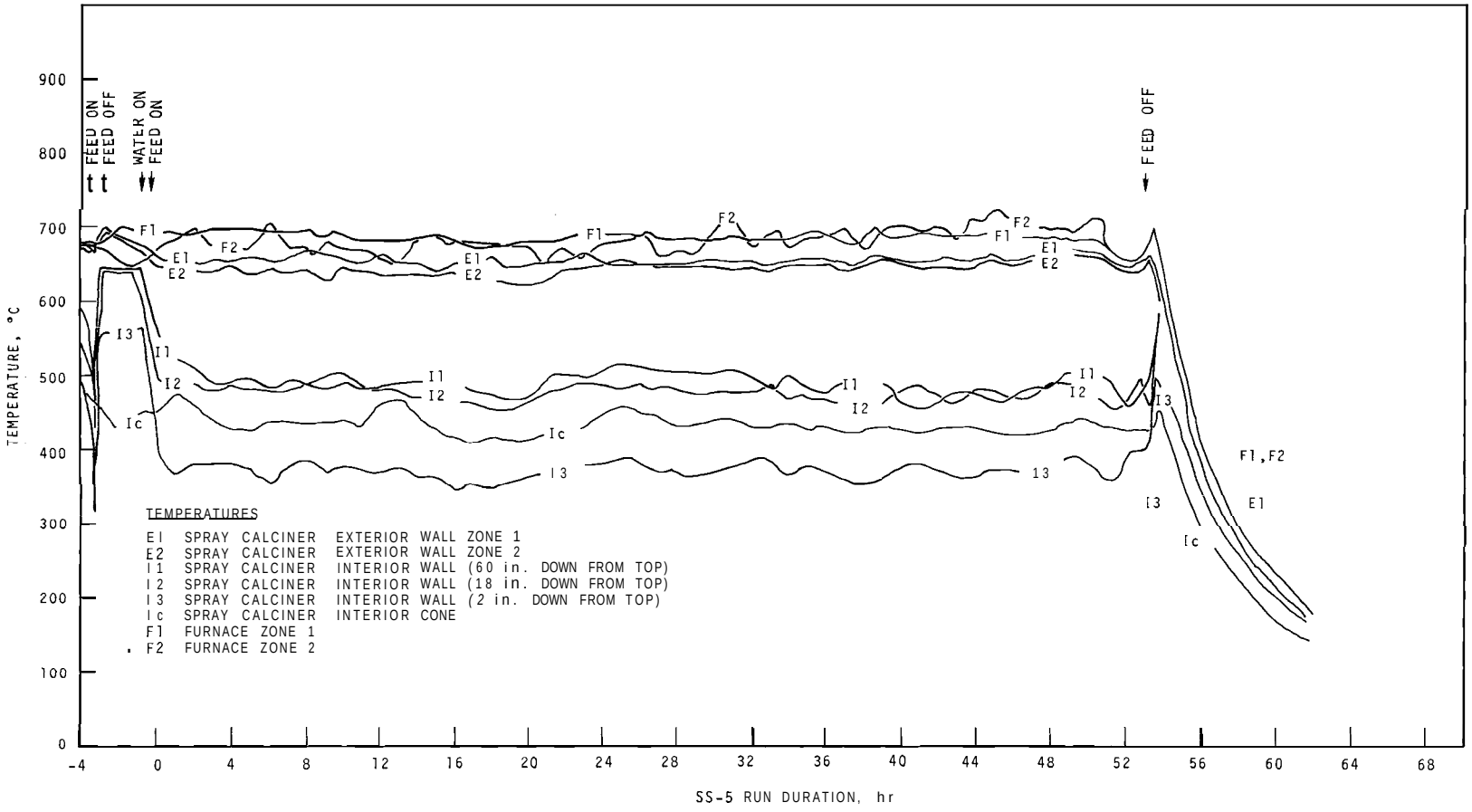

FIGURE 4.4. Spray Calciner Temperatures During Run SS-5

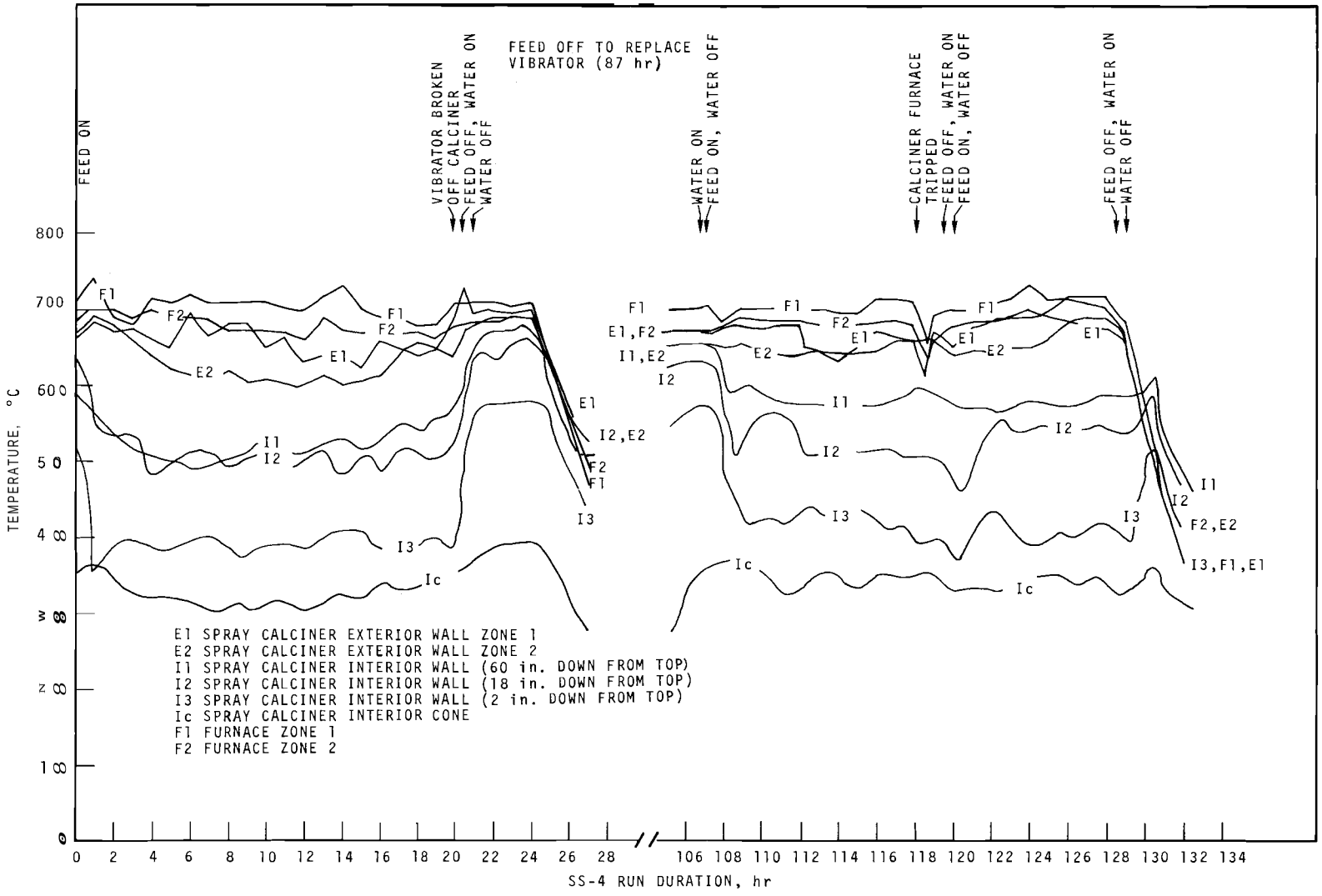

FIGURE 4.5. Spray Calciner Temperatures During Run SS-4

4.5.3 Off-Gas Filtration

The calciner and melter off-gases exit the solidifier through 15 square feet of sintered powder metal (316-L stainless steel) filters. The filters are cleaned by periodically blowing superheated steam or air back through them.

With the exception of Run SS-3, on the average less than 0.1% of the nonvolatile radioactivity was entrained from the solidifier during the runs as shown in Table 4.8. The fact that the cumulative percent entrainment is higher than the instantaneous values may indicate that a burst of calcine passed the filters at the start of the run while the filter

TABLE 4.8. Entrainment from the Spray Solidifier

Run	Percent of ^{144}Ce-Pr in Feed Entrained from the Solidifier		Comments
	Total Run[a]	Instantaneously[b]	
SS-1	0.053	0.001-0.3	
SS-2	0.019	---	
SS-3	10	---	Failed Filters
SS-4	0.16	0.001-0.017	
SS-5	0.064	0.01-0.15	
SS-6	0.071	0.002-0.006	

a. Based on the ^{144}Ce-Pr collected in the accumulated solidifier condensate for the total run.

b. Based on periodic solidifier condensate line samples.

coat was being established. During Run SS-3, 10% of the calcine was entrained from the solidifier, and resulted in a partial plugging of the vent line which eventually forced early termination of the run. After the run, two of the 15 sintered powder metal filters were found to have failed as shown in Figure 4.6. Both failures occurred just below the

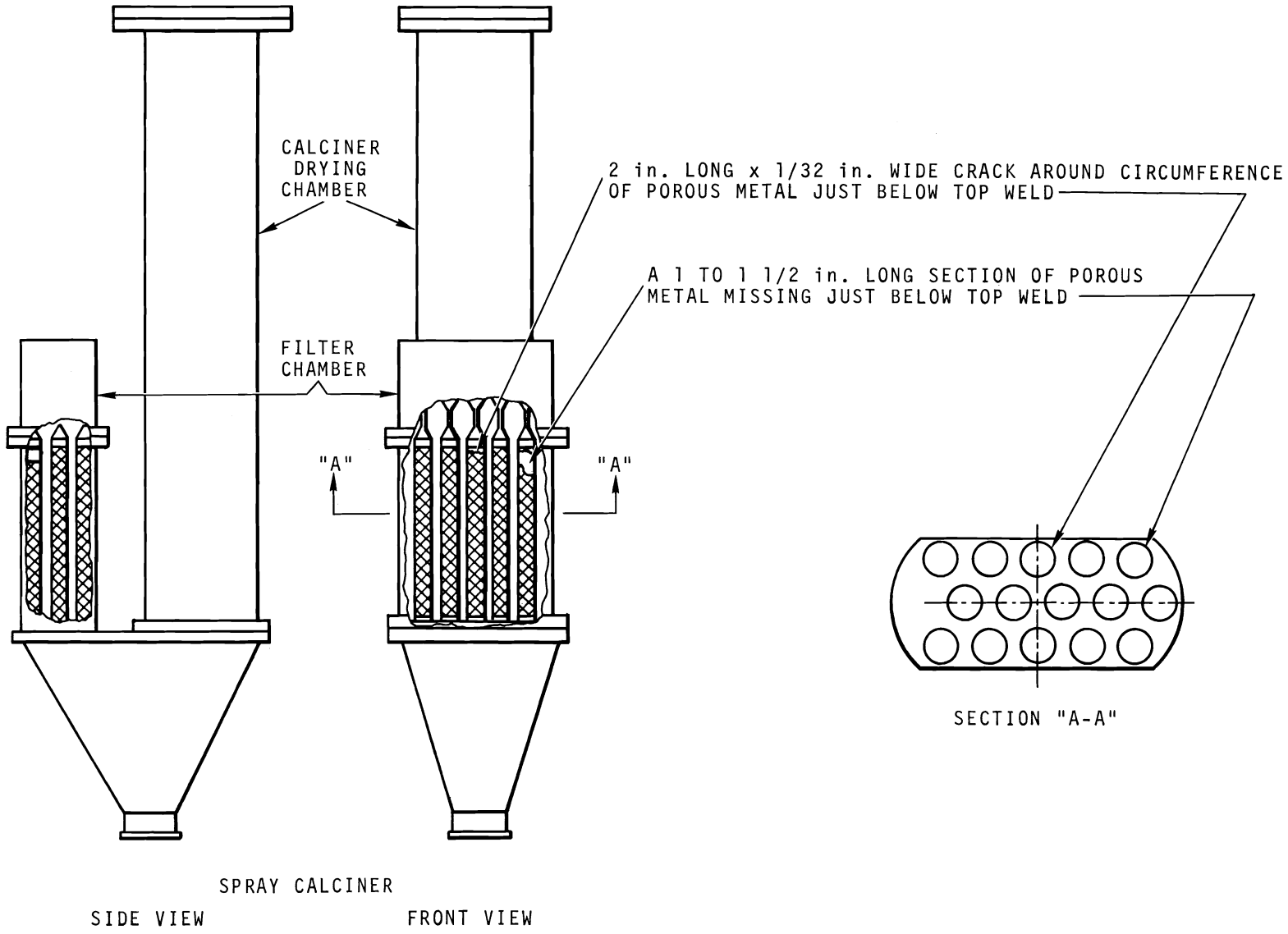

FIGURE 4.6. Location of Failed Off-Gas Filters

top manufacturer's circumferential weld which joins the porous metal to a solid collar. The collar connects the filters to venturis through which the off-gases exit. The pulse of blow-back gas is routed through the venturis in the reverse direction for filter cleaning. The off-gas filters failed after approximately 400 hours of actual service time (feed-on-time, nonradioactive and radioactive service) although they had been installed for about 3 years. They were visually inspected after the first 300 hours and appeared to be in good condition at that time.

One filter had a crack in the porous metal along the circumference in the weld-affected zone that was 2 inches long by 1/32 inch wide. A 1 to 1-1/2-inch section of porous metal was missing from the top of the second filter. The porous metal 1 to 2 inches directly below this failure appeared pitted as though numerous metal particles were missing. A sample of the porous metal (Figure 4.7) taken in this area was very crumbly and possessed no ductility. Another sample (Figure 4.8) taken 4 to 5 inches below this point was not pitted and possessed some ductility. Both samples were examined metallographically. Although the examination revealed that an appreciable amount of metal particles were missing from the sample taken near the failure, signs of corrosion of the remaining particles were no more pronounced than on the other sample which was considerably more intact.

Because the entrainment of radioactivity from the solidifier during Run SS-3 was a factor of 500 higher than in Run SS-2 and was relatively constant throughout the run, this would indicate that the failure occurred sometime between the runs. It could have very well occurred when the filter chamber was struck by a falling crane boom. Although this could explain the eventual failure of the filters, the fact remains that the apparent lack of ductility of the porous metal near

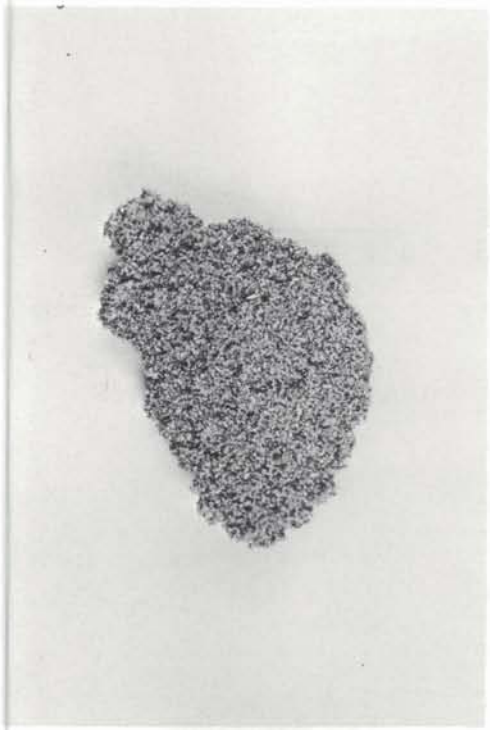

SAMPLE AS RECEIVED

Neg E6470 2.5X

CROSS SECTION OF SAMPLE AS ETCHED

Neg E6478 25X

CROSS SECTION OF SAMPLE AS ETCHED

Neg E6480 125X

FIGURE 4.7. Sample of Porous Metal Filter Taken at the Failed Area

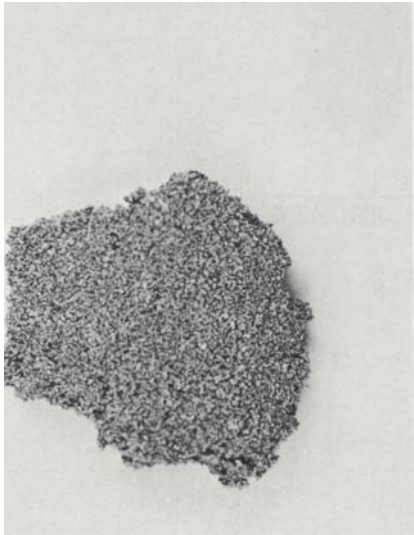

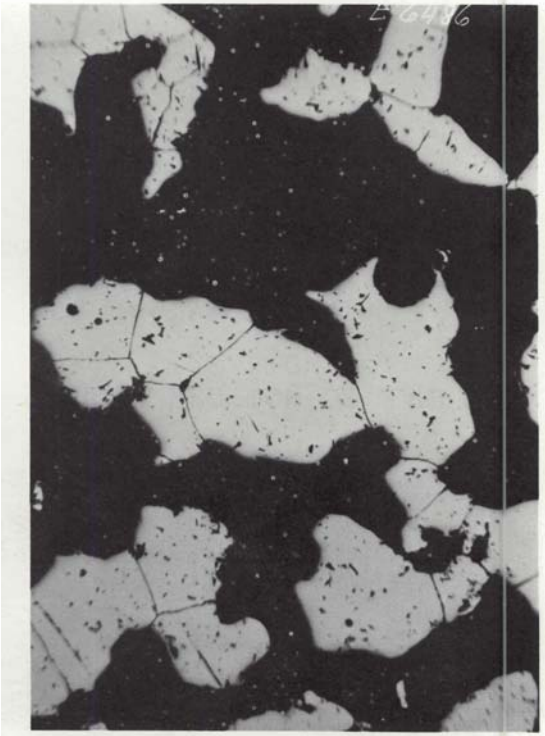

CROSS SECTION OF SAMPLE
AS ETCHED

CROSS SECTION OF SAMPLE
AS ETCHED

Neg E6471 2.5X Neg E6485 25X Neg E6486 125X

FIGURE 4.8. Sample of Porous Metal Filter Taken 4 to 5 Inches Below the Failed Area

the top of the filters may have eventually led to filter failure without having been subjected to any excessive shock. A combination of mechanical fatigue and corrosion is suspected as the cause of this loss in ductility. Fatigue at the top of the filter could result from a pivoting action about the porous metal-to-solid metal weld caused by vibration because the solidifies experiences considerable vibration. Since the filters were installed, other filters are now available, reinforced with perforated support plates inside of the filters to minimize the mechanical stressing of the porous metal. The suitability of 316L stainless steel as a construction material has not yet been fully determined. The solidifier off-gas filters were replaced with an existing spare set which is similar in most respects to the original filters used prior to Run SS-4.

During the first several runs, difficulties were experienced in controlling the filter pressure drop as shown in Table 4.6. The prime reason for the difficulty was that insufficient vent capacity was available to permit the use of adequate blowback gas without over-pressurizing the solidifier. To alleviate this problem, a parallel vent line was installed between the solidifier condenser and the auxiliary evaporator to reduce by a factor of three the flow resistance of that part of the solidifier off-gas system. In addition, the replacement filter assembly which was installed prior to Run SS-4 was modified in such a way that only two filters at a time were reverse blown instead of three as on the original set of filters. The combination of a reduction in the number of filters undergoing simultaneous blowback and a reduction in the flow resistance of the off-gas system resulted in an approximate 40% reduction in the magnitude of the pressure surges resulting during filter blowback at a given blowback pressure. It was then possible to apply sufficient blowback gas to maintain the filter pressure drop at an acceptable level during the last three runs.

The calciner was normally maintained under a vacuum of 10 to 12 inches of water to accommodate the pressure surges during filter blowback. The resultant air inleakage through the flanged connections on the solidifier (particularly on the melter) ranged from 5 to 10 scfm, and represented 20 to 30% of the total off-gas flow.

Either superheated steam or heated air was used during the runs as a blowback gas, and each proved satisfactory. However, when using steam, one must make sure that condensate does not accumulate in the supply system. During the runs, each bank of filters was usually blown back for 2 seconds during every 2 minutes. During Runs SS-4 through SS-6, a blowback gas pressure of 40 to 45 psig maintained the filter pressure drop between 4 to 7 inches of water. The use of 40 psig air (350 °C) as blowback gas added approximately 1.5 scfm of air to the solidifier off-gas system. Also, during these last three runs, the filter blowback system was usually turned off for 10 to 15 minutes during discharge of the melter. However, this did not adversely affect the filter pressure drop.

4.6 PERFORMANCE OF THE MELTER

The calcined waste drops from the spray calciner directly into the melter[13] where it is converted to a melt. Continuous discharge of the melt from the melter via the external weir was used only during the first 60% of Run SS-1 until the weir became frozen and could not be thawed. The weir discharge was erratic and considerable difficulty was experienced with stalagmite formation in the heated receiver pot during this period. Increasing the receiver pot furnace temperature from 800 to 850 °C did not melt the stalagmite. The erratic weir discharge resulted in part from the fluctuations in the solidifier pressure caused by the filter blowback system. For the remainder of Run SS-1 and during the following five runs,

batches in the melter were successfully discharged through the drain freeze-valve. This technique made possible the filling of unheated receiver pots.

As shown in Table 4.9, the internal melt temperature measured near the bottom of the melter was generally 20 to 75 °C below the furnace temperature. This melt temperature ranged from 1050 to 1120 °C during processing of PW-1 waste and from 880 to 900 °C during processing of PW-2 waste. Figures 4.9 and 4.10 show typical melter temperatures during processing of PW-1 waste (Run SS-5) and PW-2 waste (Run SS-4), respectively. The melt level was about 5 to 6 liters when batches in the melter were discharged. The time at which to discharge the melter was determined by the amount of waste fed between batches and the melter internal temperatures. The 5 to 6-liter level in the melter was usually indicated when the internal melt temperature located 5-1/2 inches from the melter bottom (3.9 liter level) increased to almost equal the temperature at the lower part of the melter.

During the first start up for Run SS-3, the melter furnace stopped heating while operating at 1150 °C. Electrical continuity checks showed that the furnace elements were sound, but that four of the six copper leads from the furnace junction to individual phase terminals were electrically open. The leads, which were routed inside the furnace cooling jacket, were found to be badly burned by excessive heat from the furnace. At the time of failure, the furnace had been energized intermittently for 503 hours, including 107 hours at 1150 °C or above. All six of the copper leads were remotely replaced and rerouted outside the furnace jacket in order to keep them cool. The furnace was then heated to 1200 °C, and current and power readings indicated that the furnace was fully repaired. The furnace operated satisfactorily during the following runs.

TABLE 4.9. Melter Operating Parameters

Run	Feed Type	Melt Heat Rate Density, W/liter	Melter Furnace		Melt[a] Temperature, °C	Calculated Melt Production Rate, liters/hr	Melt Discharge	
			Average Temperature, °C	Average Gross Power, kW			Method	Rate, liters/hr
SS-1	PW-1	7.5	1150-1200	---	1100	1.19	65% continuous	1.2
							35% batch	50
SS-2	PW-1	44	1150	---	1100	0.84	batch	17
SS-3	PW-2	36	910	7.0	880	1.23	batch	40
SS-4	PW-2	91	920	7.5	900	1.38	batch	55
SS-5	PW-1	127	1125	14.4	1050	1.23	batch	45
SS-6	PW-1	168	1150	14.5	1120	1.18	batch	60

a. The maximum measured melt temperature (near the bottom of the melter).

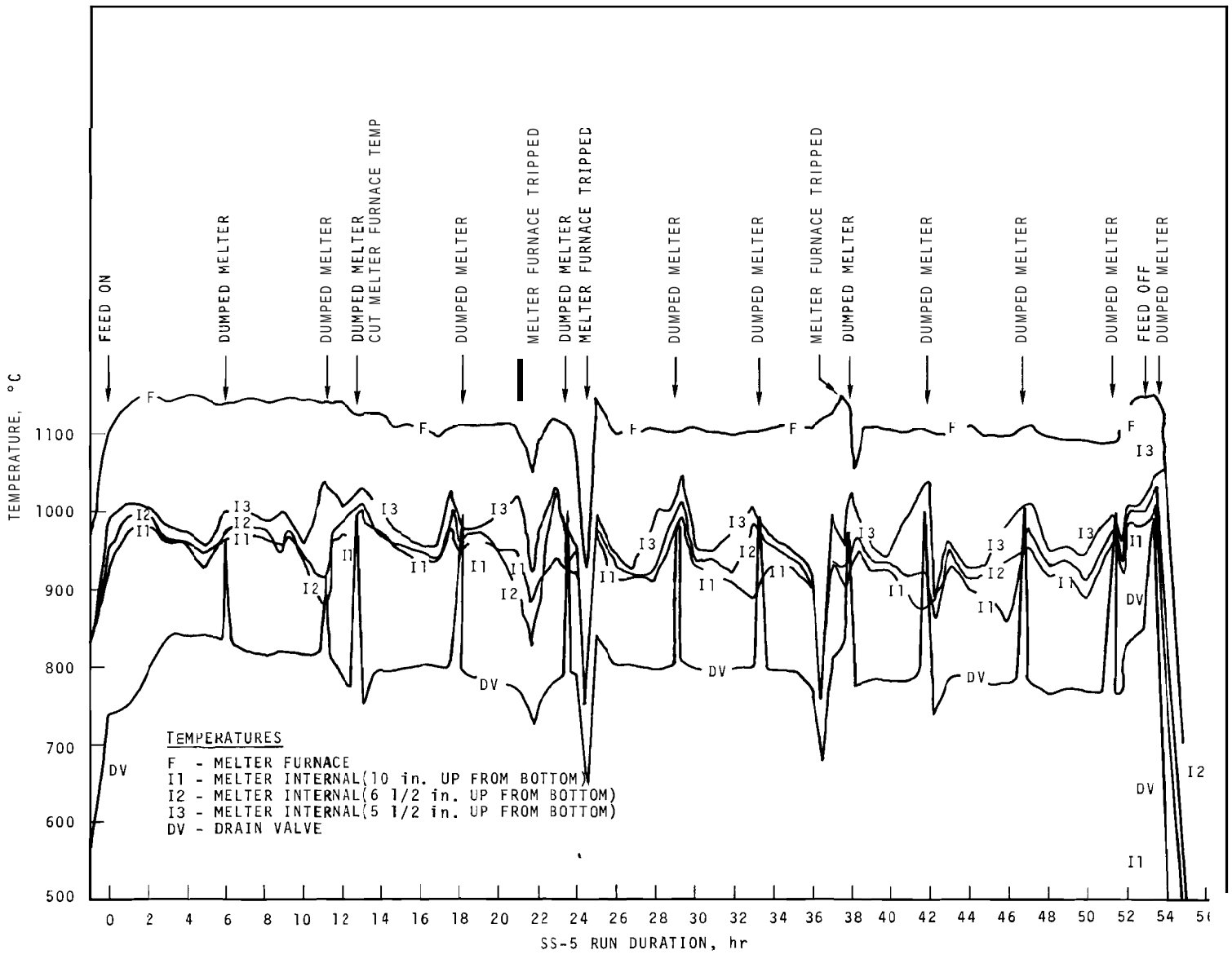

FIGURE 4.9. Melter Temperatures During Run SS-5

BNWL-1391

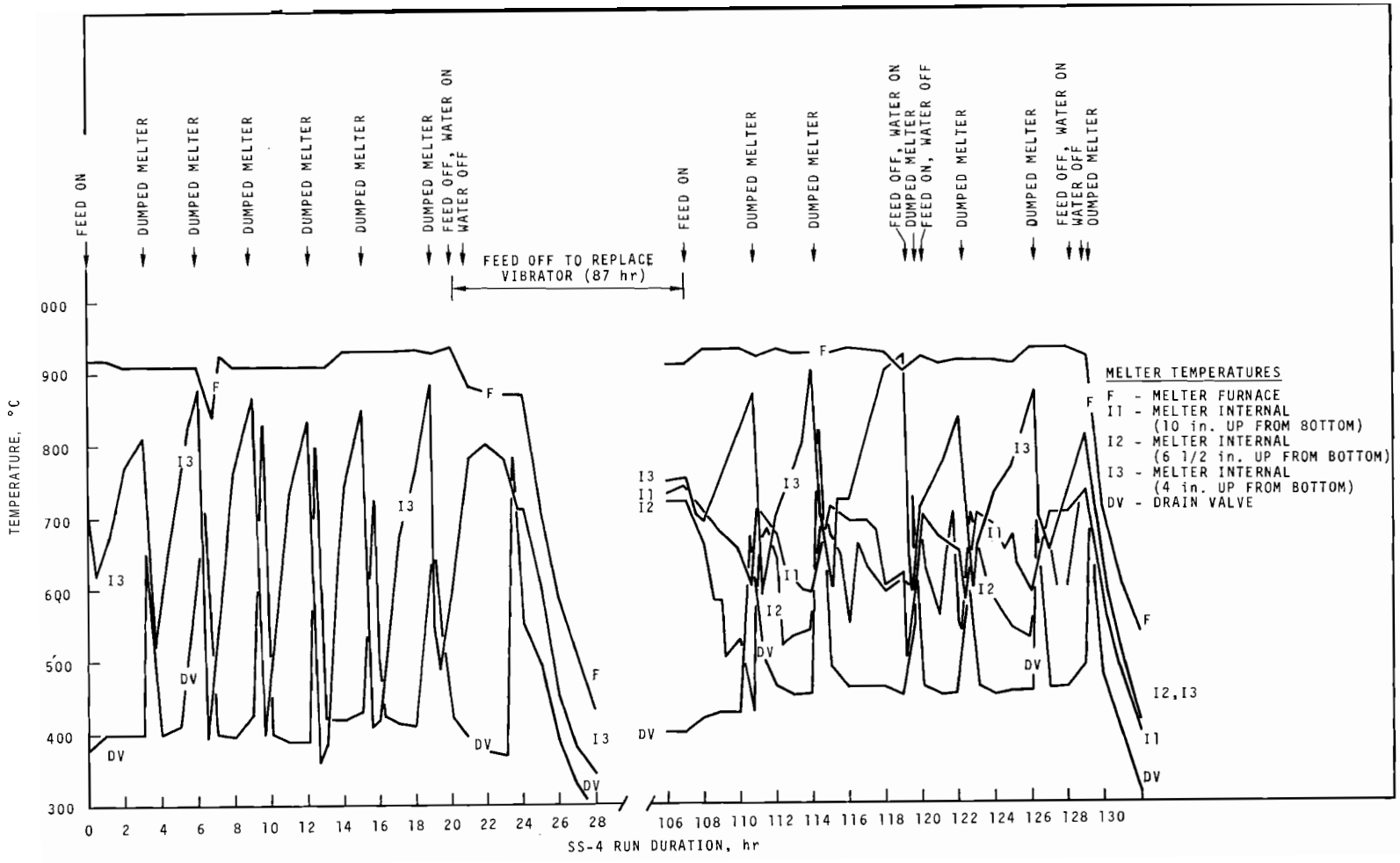

FIGURE 4.10 Melter Temperatures During Run SS-4

4.6.1 Solids Addition

To increase sulfate retention in melts with PW-2 waste, the melting point of the calcine was reduced to about 700 °C during Runs SS-3 and SS-4 by adding sodium metaphosphate ($NaPO_3$) as a solid directly to the melter. The $NaPO_3$ was not added to the feed because the low melting point (approximately 700 °C) of the mixture would have caused melting in the calciner. (Operation of the calciner at low enough temperatures to eliminate melting in the calciner [about 600 °C], would reduce calciner capacity.) Due to difficulties experienced with the vibrating tray solids feeder used during design verification testing of the spray calciner,[4] a system was improvised whereby batches of solids were added from outside the process cell. The system is shown in Figure 4.11. Sodium metaphosphate glass particles (-6+10 mesh Tyler series) were added in small batches to the suction side of an air-operated jet and conveyed pneumatically into the cell and discharged into a screen-covered hopper on the solids feeder. The solids feeder consisted of a piece of pipe attached to a nozzle on the calciner cone with two air-operated ball valves which served as an air lock so that the solids could be added without disrupting the solidifier vacuum. A vibrator was also attached to aid transport of the solids.

To give an equivalent concentration of 1.27M for 378 liters/tonne feed, the $NaPO_3$ was added every half-hour in batches of 400 to 600 grams, depending on the feed rate to the solidifier. The additions were closely monitored so as not to greatly exceed this $NaPO_3$ requirement since nonradioactive development studies showed that excess $NaPO_3$ increased sulfate evolution from the melt, and the melt would foam in a heated receiver pot.[9,16]

Difficulties with the solids addition system occurred early in Run SS-3 when the feeder became plugged at the calciner and had to be removed for modification. After addition

of a heated air purge (1 scfm at 250 °C) to the solids feeder to minimize condensation and subsequent plugging at the entry point to the solidifier, the system performed satisfactorily for the remainder of Run SS-3 and all of Run SS-4. A total of 25.4 kilograms of $NaPO_3$ was added to the melter during Run SS-3 and 40.4 kilograms were added during Run SS-4.

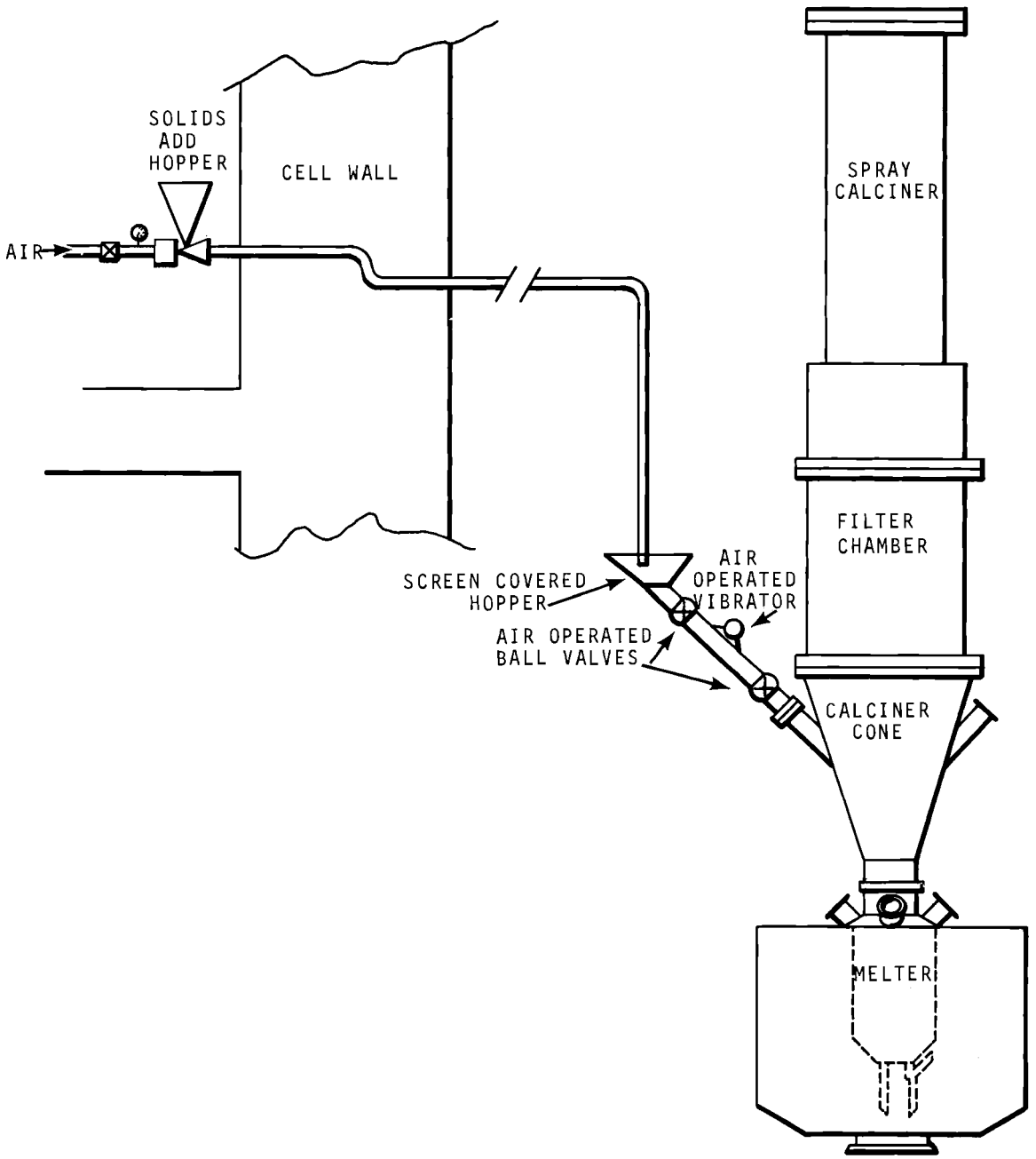

FIGURE 4.11. Solids Addition System

Less than 2 and 7% of the sulfate in the feed was volatilized from the PW-2 melts during Runs SS-4 and SS-3, respectively. This is in good agreement with data from non-radioactive runs.[4]

4.6.2 Melt Drain Systems

Initially both the melter drain and weir tubes terminated inside separate electrically-heated chambers[13] where heat could be applied to thaw the melt plug in the tubes to initiate melt flow. As mentioned earlier, the weir was used during the first 60% of Run SS-1 to discharge the melter until it became frozen and could not be thawed. Attempts to unthaw the weir eventually resulted in failure of the small electrical heater. However, during the remainder of Run SS-1 and all of Run SS-2, the melter was successfully batch-discharged using the drain freeze-valve heating system.

Prior to Run SS-3, a new electrical heating assembly was installed for both tubes. However, during the startup for Run SS-3, half of both heaters burned out and half a heater was not sufficient to thaw either of the tubes. Consequently, the melter was batch-discharged through the drain tube during Runs SS-3 and SS-4 with necessary heating being manually supplied by a propane torch. Tests[5] on propane heating of platinum in contact with PW-2 melt indicated that no appreciable attack of the platinum would occur if the propane flame was not a reducing flame and if propane heating was used sparingly. However, excessive use of propane heating and/or use of a reducing flame would probably lead to embrittlement of the platinum.

Due to the difficulties experienced with the previous electrical heating system and the potential for platinum embrittlement while using direct propane heating, a modified method[17] to control the discharge of melt from the melter

was developed prior to Run SS-5. The method consisted of using the heat from the melter furnace to thaw the frozen plug in the melter tubes and solidifying the melt in the tubes by air cooling coils surrounding each tube.

Figure 4.12 shows a top view of the modified freeze-valve cooling coil assembly which was installed on the melter prior to Run SS-5. A schematic of the assembly as'positioned in the melter furnace is shown in Figure 4.13.

The cooling air flows from the bottom to the top of the cooling coils and is then exhausted from the assembly. The coils were not intended to freeze the melt in the tubes while the melter is draining rapidly. Rather, the coils seal the tubes after flow has stopped.

The outside of the drain freeze-valve coil is insulated to reduce the interaction between cooling coils. Without insulation, cooling air flowing in one coil may freeze both valves. The coil assembly is insulated and lined with platinum foil (not shown in Figure 4.12) to minimize heat loss when the cooling air is shut off. The melt discharges from the drain and weir tubes through large holes in the bottom of the assembly.

Experience has revealed that molten waste will rapidly corrode Hastelloy X at the operating temperatures of the melter (900 to 1200 °C) if metal and melt come in contact. Furthermore, the platinum tubes may be attacked if the platinum, the melt, and the alloy coil are all in contact with each other. To prevent such contact, a platinum wire spacer cage is suspended inside each coil.

The freeze-valve cooling coil assembly performed satisfactorily during Runs SS-5 and SS-6. The melter was batch-discharged during both runs, primarily because batch discharge allowed filling of the receiver pots without stalagmite

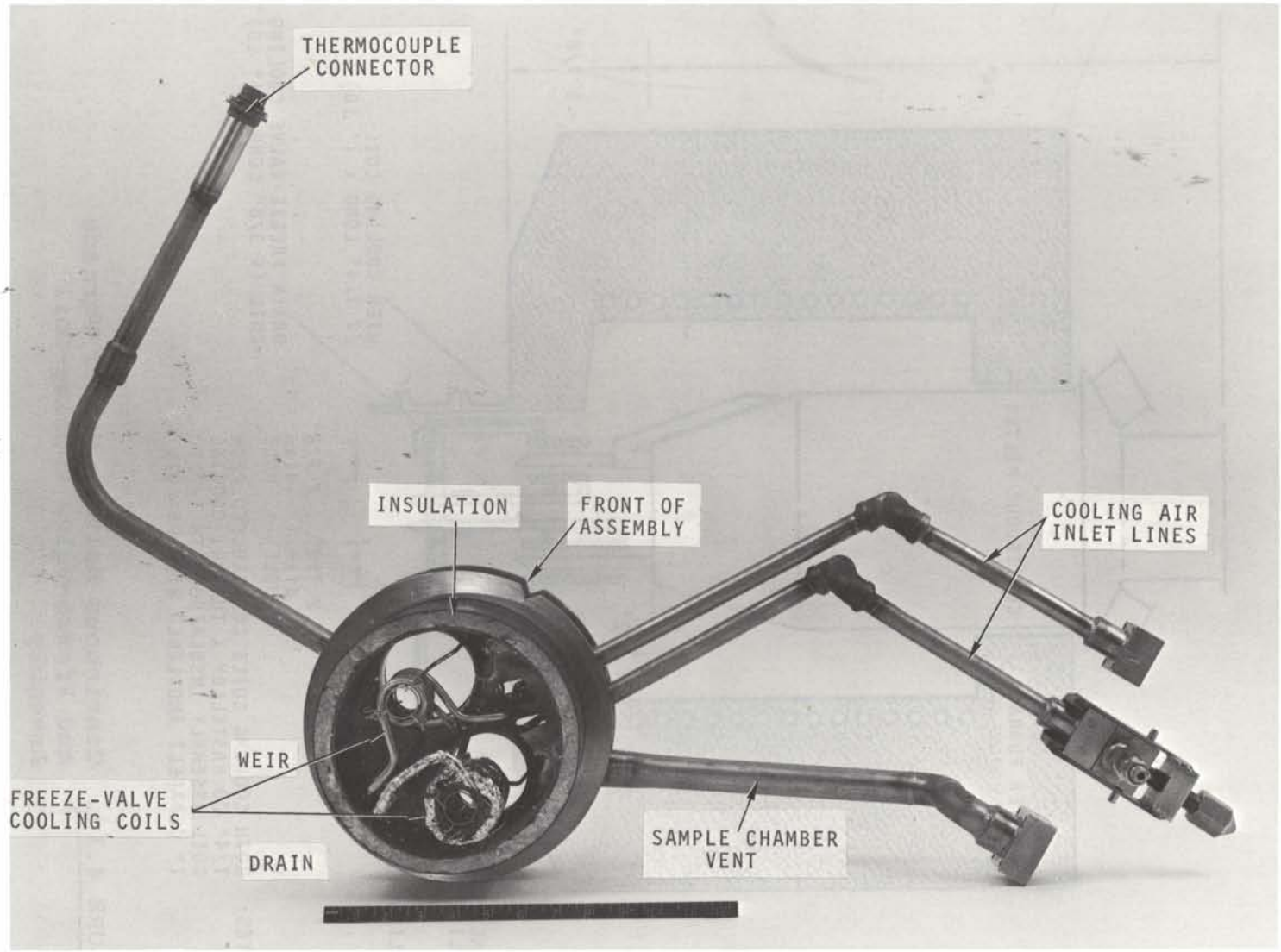

Neg 0683606-3

FIGURE 4.12. Top View of Freeze-Valve Cooling-Coil Assembly

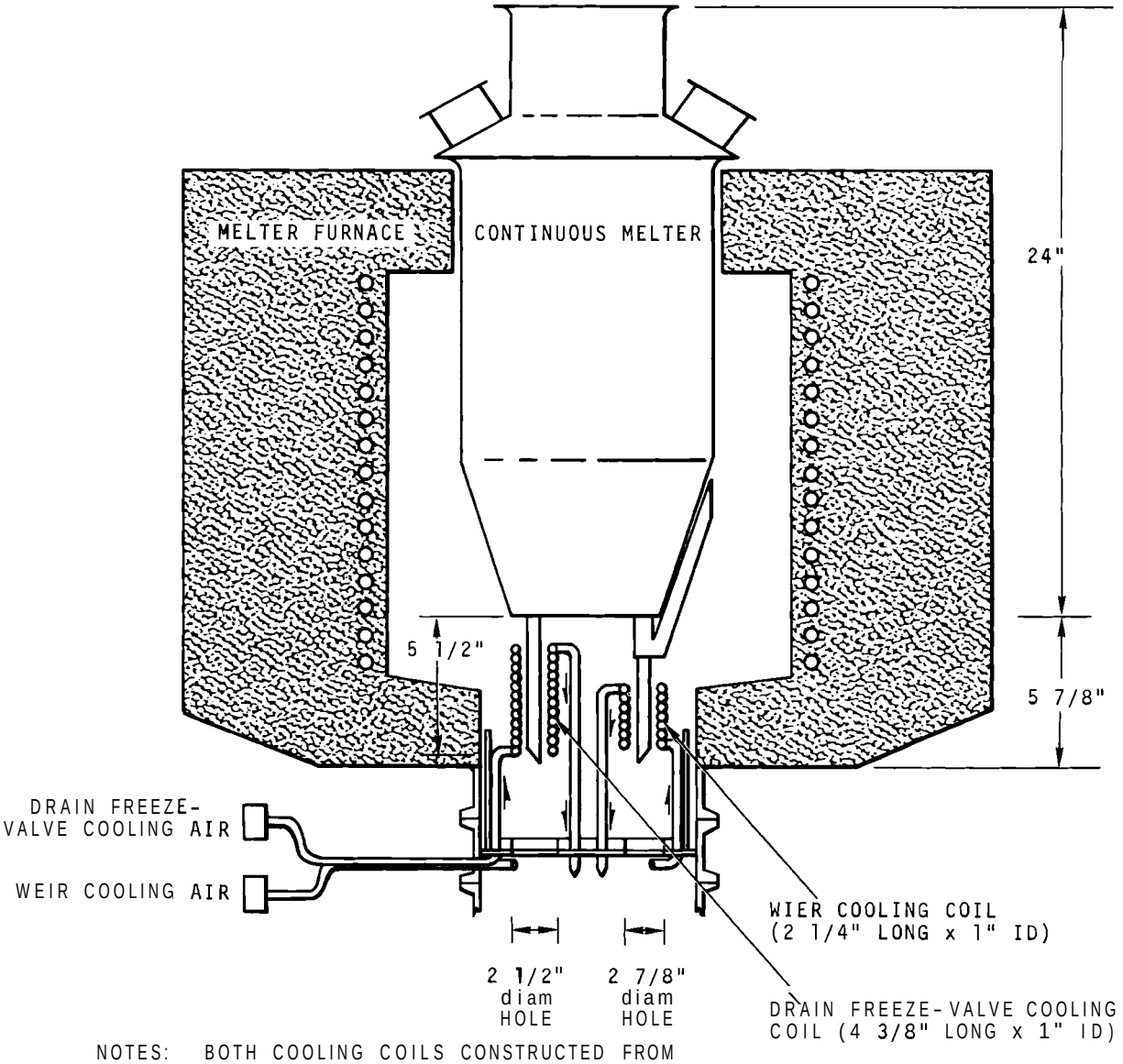

NOTES: BOTH COOLING COILS CONSTRUCTED FROM 1/4" OD HASTELLOY X TUBING; COOLING COIL ASSEMBLY INSULATED WITH 1/2 TO 1" CERAFELT AND LINED WITH Pt FOIL

FIGURE 4.13. **Continuous Melter, Melter Furnace and Freeze-Valve Cooling-Coil Assembly**

formation. To batch discharge the melter, the air to the cooling coil of the drain freeze-valve was turned off. When the melter started draining (which usually occurred 2 to 3 minutes after the air had been turned off), the filter blowback system was turned off to avoid pressurizing the solidifier, and the solidifier vacuum was reduced to approximately 2 inches of water to speed the drainage. The air was turned back on to the drain valve coil shortly after the melter quit draining a steady stream and started to drip. The blowback system and solidifier vacuum were restored to normal approximately 2 to 3 minutes after the melter had quit dripping. A typical batch of 4 to 6 liters of melt usually drained steadily for 4 to 8 minutes and then dripped for another 2 to 4 minutes before the drain tube sealed. On several occasions, difficulties occurred in sealing the drain tube primarily as the result of not letting the melter completely empty out before trying to seal it. On one occasion it was necessary to reduce the melter furnace temperature in order to stop the melter from dripping. The importance of ensuring that the drain tube is sealed was demonstrated during Run SS-6. At the start of this run, air back-sparged up through the unsealed drain tube and splattered melt up onto the underside of the melter cover, partially blocking the inlet to the melter. As a result, difficulty was experienced in maintaining calcine flow to the melter during all of Run SS-6. Usually, the blowback system was off about 10 to 15 minutes during the dump procedure, but this did not have any detrimental effect on the solidifier off-gas filter pressure drop.

The cooling air flow rates to the drain freeze-valve coil and the weir coil were 4 to 5 and 2 to 3 scfm, respectively, during Runs SS-5 and SS-6. The temperatures at the drain and weir tubes were 800 to 840 °C at the previously-mentioned air flow rates. When the air was turned off to the drain

freeze-valve coil, the temperature at the drain tube increased to 950 to 1000 °C, which was slightly higher than test data obtained without the platinum foil liner prior to installation of the system on the solidifier. The PW-1 and PW-2 melts were batch discharged from the melter at rates of 40 to 50 liters/hr, with exception of Run SS-2 where the rate was only 17 liters/hr. The lower rate during Run SS-2 was attributed to a deficiency of sodium in the feed which resulted in a melt with higher than normal viscosity. The batch discharge of the PW-1 and PW-2 melts at the higher rates allowed filling of unheated receiver pots without stalagmite formation.

4.6.3 Effect of Internal Heat Generation

The net heat requirement to form a fluid melt from the entering PW-1 or PW-2 waste calcine is about 1.5 to 2.5 kilowatts for a melt production rate of 1.2 liters/hr. The heat was escalated during these first 6 demonstration runs until a heat rate density of 168 W/liter was attained for a PW-1 melt in Run SS-6. This heat rate density accounts for 40 to 70% of the net heat requirement in a melt volume of 6 liters. However, due to the continuous variation of melt volume from 0 to 6 liters (during batch dumping) and due to the high heat losses from the melter (about 12 kilowatts), the effect of internal heat generation was not apparent.

4.7 GENERAL PERFORMANCE AND OPERATING HISTORY

4.7.1 Waste Composition Effects

During WSEP spray solidification of highly radioactive aqueous wastes to solids, relatively few processing problems resulted from waste composition. Two runs with PW-2 waste and four runs with PW-1 waste demonstrated adequate performance with wastes from light water reactor fuels.

Detailed waste compositions for the six runs and other pertinent data on the feeds to the solidifier are listed in Table 9.1 of the Appendix. Summary feed composition ranges for the six spray solidification runs are shown in Table 4.10.

TABLE 4.10. Summary of Waste Composition Ranges

	PW-1 Waste, M[a]		PW-2 Waste, M[a]	
Constituents	Nominal	Actual[b]	Nominal	Actual[b]
Na^{+}	0.138	0.4 to 0.73[c]	0.93	0.91 to 1.02
Al^{+3}	0.001	0.07 to 0.14[d]	0.001	0.31[d,e]
Fe^{+3}	0.93	0.72 to 0.95	0.445	0.38
$(Y+RE)^{+3}$	0.12	0.12 to 0.19[f]	0.12	0.2 to 0.23[f]
NO_3^{-}	7.5	6.1 to 7.5	5.37	4.6 to 5.1
SO_4^{-2}	---	0.003 to 0.01[g]	0.87	0.57 to 0.66[h]
Additives				
Na^{+}	0.5	included above	---	---
PO_4^{-3}	1.7	1.67 to 2.0	1.61	1.6

(a) Molarities are based on 378 liter/tonne feed.

(b) Based on analysis of the composite feed (including additives).

(c) Includes the additive sodium.

(d) Excesses result from the presence of excess aluminum in the Purex high level waste. The excess aluminum was substituted for iron.

(e) Includes 0.25M aluminum additive.

(f) The analysis for rare earths in the presence of phosphates is known to be in error by as much as a factor of 2.

(g) Sulfate is used as a substitute for fission product tellurium. Excess sulfate is due to the presence of sulfate in the Purex high level waste.

(h) The presence of insoluble sulfates gives lower analytical values than are known to be actually present.

Feeds to the spray solidification process were prepared using actual Purex high level waste and concentrated radiorare-earths (mostly ^{144}Ce-Pr) solutions to provide the desired self-heat generation rate in the solidified product. However, because the "two stock" radioactive solutions sometimes contained excess aluminum and rare-earths compared to the standard PW-1 and PW-2 waste compositions, actual composition of the wastes processed varied somewhat from the desired composition. (See Section 3 for the details of the effects of these changes in composition.) The ability to handle these variations in themselves point out the flexibility of the solidification system.

The excess aluminum in the Purex waste was used as a partial substitute (8 to 20%) for the 0.93M iron in the runs with PW-1 waste.

Even though aluminum is required as an additive to PW-2 waste, excess aluminum in the Purex waste was used as a partial substitute (12 to 13%) for the 0.445M iron during runs with PW-2 waste.

All chemical additives were added directly to the feed for the PW-1 waste, while a portion of the flux for the PW-2 waste was added as solid $NaPO_3$ directly to the melter (via the calciner cone).

4.7.2 Related Equipment

Performance of the primary spray solidifier equipment has been discussed in the preceding sections. The operating history of this equipment (which includes all nonradioactive tests) is summarized in Table 4.11. Discussion of other related equipment is presented below.

TABLE 4.11. Spray Solidification Equipment Operating History Through Run SS-6

Equipment	Construction Material	Temp, °C	Pressure, in. of Water	Chemical	Total Operating Time, hr	Comments
Calciner shell	310 SS	200 to 700	-20 to 0	Atomized liquid and calcined waste; water and HNO_3 vapors; oxides of nitrogen; oxides of sulfur; air	575	
Calciner furnace	Nichrome V elements and Tipersul insulation	650 to 750	-0.5	Cell air	600	
Off-gas filters No. 1	Sintered 316-L SS powder metal filters (1/16 in. thick)	200 to 400	-20 to +5	Calcined waste, water and HNO_3 vapors, oxides of nitrogen, oxides of sulfur, and air	426	Two filters failed (see Section 4.5.3) and the assembly was replaced prior to Run SS-4.
No. 2	Sintered 316-L SS powder metal filters (1/16 in. thick)	200 to 400	-20 to +5		149	
Feed nozzle No. 1	303 SS (external-mix)	80 to 200	0 (feed side)-50 psig (air side)		41	Replaced prior to Run SS-2 because of excessive deposition during Run SS-1
No. 2	303 SS (internal-mix)	50 to 200	20 to 30 psig	Liquid waste and air	106	Replaced prior to Run SS-3 because of a malfunctioning clean-out needle.
No. 3	303 SS (internal-mix)	50 to 130	20 to 30 psig		180	Replaced after Run SS-6 because of deposition in calciner (see Section 4.5.1).
Calciner Vibrator No. 1	Mild Steel	50 to 100	30 to 40 psig	Air	138	Replaced prior to Run SS-3 due to a stuck piston.
No. 2	Mild Steel	50 to 100	30 to 40 psig	Air	52	Replaced during Run SS-4 when mount broke loose from calciner.
No. 3	Mild Steel	50 to 100	30 to 40 psig	Air	102	Replaced during Run SS-6 when it quit vibrating
No. 4	Mild Steel	50 to 100	30 to 40 psig	Air	27	
Calciner seal pot	304-L SS	30 to 50	-20 to +5	Water	575	
Melter	pt	700 to 1200	-20 to +5	Calcined and molten waste and vapors	300	After Run SS-1 an indentation was noted in one side of the melter.
Melter furnace	Kanthal A-1 elements, K-28 and Fiberfrax insulation	800 to 1250	-0.5	Cell air and receiver pot vapors	730	Internal furnace leads failed after 500 hr of operation prior to Run SS-3 and had to be replaced (see Section 4.6).
Melter drain freeze-valve heater	Kanthal A-1 elements	700 to 1000	-0.5	Cell air and receiver pot vapors	27	Heater was replaced prior to Run SS-3; however, the replacement failed during startup.
Melter weir valve heater	Kanthal A-1 elements	700 to 1000	-0.5	Cell air and receiver pot vapors	64	Heater failed prior to Run SS-2 and was replaced prior to Run SS-3; however, the replacement failed during startup.
Melter freeze-valve cooling coil assembly	Hastelloy X coils	800 to 1000	-0.5	Cell air and receiver pot vapors	110	

Seal Pot

A secondary vent line from the solidifier provided for relief of solidifier pressure if it increased to atmospheric level during operation. A water-seal pot in the line allows auxiliary venting of the solidifier and overflows directly into a condensate receiver tank (TK-117).

The calciner seal pot is an 8-inch diameter by 36-inch long section of pipe which is closed at each end and contains inlet and outlet piping arranged in such a way that maximum pressure differentials of up to 20 inches of water are required to allow gas to flow from the calciner to the condensate tank. Backward flow of seal water to the solidifier is not possible. During the first three runs the solidifier was vented frequently through the seal pot during filter blowback as the result of insufficient venting capacity of the solidifier off-gas system. However, this did not occur during the last three runs after the venting capacity of the off-gas system had been increased.

Receiver Pot Furnace

The six-zone resistance-heated receiver pot furnace-cooler performed well in transferring heat to or from the receiver pot. The furnace was operated at 800 to 850 °C and 650 to 700 °C to slump PW-1 and PW-2 melts, respectively, in the receiver during all of Runs SS-1, SS-2, SS-3, and during the first half of SS-5. While filling the receiver, the zones below the melt level were unheated and sometimes cooled. During the last half of Run SS-5 and all of Runs SS-4 and SS-6, the receiver pots were unheated and the furnace-cooler provided cooling function only. Indirect cooling by forced air around the outside of the furnace susceptor was sufficient to maintain the steady-state centerline temperatures of the receiver pot contents below 780 °C and the steady-state pot wall temperatures below 460 °C during Run SS-6 which had the highest internal heat

generation rate (11 kilowatts) of the six runs. With additional air cooling inside the susceptor, the furnace should be adequate for cooling pots containing up to 13 kilowatts of solidified waste. See the additional discussion in Section 4.2.

REFERENCES FOR SECTION 4

1. R. T. Allemann and B. M. Johnson, Jr. Radiant-Heat Spray-Calcination Process for the Solid Fixation of Radioactive Waste, Part I - Nonradioactive Pilot Unit, HW-65806-Pt 1. Available from Clearinghouse for Federal Scientific and Technical Information, Springfield, Virginia, February 1961.

2. R. T. Allemann, F. P. Roberts and U. L. Upson. Solidification of High-Level Radioactive Fuel Reprocessing Wastes by Spray and Pot Calcination - Hot-Cell Pilot Plant Studies, HW-83896. Available from the Clearinghouse for Federal Scientific and Technical Information, Springfield, Virginia, September 1969.

3. J. D. Kaser and J. D. Moore. "The Development of a Spray Calciner-Melter," Proceedings of the Symposium on the Solidification and Long-Term Storage of Highly Radioactive Wastes, February 14-18, 1966, Richland, Washington, CONF-660208, pp. 326-372. Available from Division of Technical Information Extension, Oak Ridge, Tennessee, November 1966.

4. J. D. Moore. Waste Solidification Engineering Prototype, Design Verification Testing of the Spray Solidification Equipment, BNWL-1117. Battelle-Northwest, Richland, Washington. July 1969.

5. J. D. Kaser, W. R. Bond and J. D. Moore. "The Spray Solidification Process," Waste Solidification Program, Volume 1, Process Technology - Pot, Spray, and Phosphate Glass Solidification Process, K. J. Schneider, Editor. BNWL-1073, pp. 6.1-6.30. Battelle-Northwest, Richland, Washington, August 1969.

6. W. R. Bond. "Developmental Spray Calciner Runs," Quarterly Progress Report, Research and Development Activities, Fixation of Radioactive Residues, January-March 1967, edited by A. M. Platt, BNWL-434, pp. 15-18. Battelle-Northwest, Richland, Washington, July 1967.

7. W. R. Bond. "Developmental Spray Calciner Runs," Quarterly Progress Report, Research and Development Activities, Fixation of Radioactive Residues, April-June 1967, edited by A. M. Platt, BNWL-507, pp. 8-11. Battelle-Northwest, Richland, Washington, August 1967.

8. J. W. Loeding, E. L. Carls, L. J. Anastasia and A. A. Jonke. The Fluid-Bed Calcination of Radioactive Waste, ANL-6322. Argonne National Laboratory, Argonne, Illinois, May 1961.

9. W. R. Bond. "Developmental Spray Calciner Runs," Quarterly Progress Report, Research and Development Activities, Fixation of Radioactive Residues, July-October 1967, edited by A. M. Platt, BNWL-677, pp. 12-17. Battelle-Northwest, Richland, Washington, March 1968.

10. J. D. Moore. "Development Spray Solidification Runs," Quarterly Progress Report, Research and Development Activities, Fixation of Radioactive Residues, November 1968-January 1969, edited by A. M. Platt, BNWL-1003, pp. 4-10. Battelle-Northwest, Richland, Washington, February 1969.

11. P. C. Owzarski, M. R. Schwab and J. L. McElroy. "Auxiliary Processing," Waste Solidification Program, Volume 1, Process Technology - Pot, Spray, and Phosphate Glass Solidification Processes, edited by K. J. Schneider, BNWL-1073, pp. 9.1-9.46. Battelle-Northwest, Richland, Washington, August 1969.

12. J. N. Hartley. Unpublished Data. Battelle-Northwest, Richland, Washington, November 1969. (Personal communication)

13. K. J. Schneider and V. P. Kelly. Waste Solidification Program, Volume 2, Design Features of the Waste Solidification Prototypes, BNWL-968. Battelle-Northwest, Richland, Washington, February 1969.

14. W. R. Bond and J. D. Kaser. "Spray Nozzle Atomization Studies," Quarterly Progress Report, Research and Development Activities, Fixation of Radioactive Residues, January-March 1967, edited by A. M. Platt, BNWL-434, pp. 12-14. Battelle-Northwest, Richland, Washington, June 1967.

15. J. D. Kaser. Evaluation of Atomizing Nozzles for the Spray Solidification of Radioactive Waste, BNWL-1066. Battelle-Northwest, Richland, Washington, June 1969.

16. J. E. Mendel. "Effect of Excess $NaPO_3$ in the Spray Solidifier PW-2 Flowsheet," Quarterly Progress Report, Research and Development Activities, Fixation of Radioactive Residues, July-October 1967, edited by A. M. Platt, BNWL-677, pp. 11-12. Battelle-Northwest, Richland, Washington, March 1968.

17. J. D. Kaser. "New Freeze Valve Cooling Coil Assembly," Quarterly Progress Report, Research and Development Activities, Fixation of Radioactive Residues, August-October 1968, edited by A. M. Platt, BNWL-923, pp. 11-14. Battelle-Northwest, Richland, Washington, December 1968.

18. A. E. Albrethsen. "Volatilization of Fission Products from High Level Ceramic Wastes," Proceedings of the Symposium on the Solidification and Long-Term Storage of Highly Radioactive Wastes, February 14-18, 1966, Richland, Washington, CONF-660208, pp. 606-622. Available from Division of Technical Information Extension, Oak Ridge, Tennessee, November 1966.

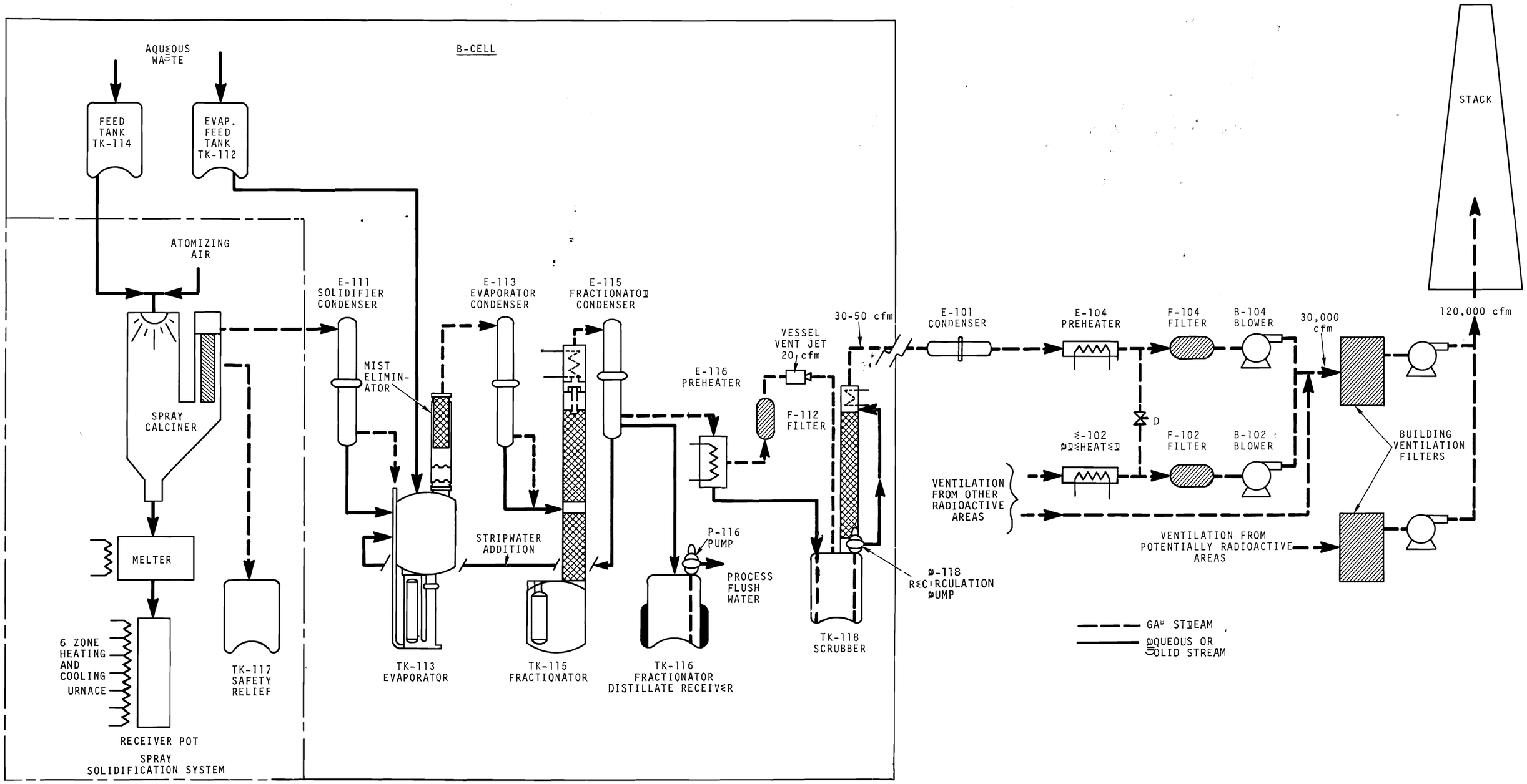

FIGURE 5.1. WSEP Auxiliary Process System

5.0 AUXILIARY PROCESS EQUIPMENT PERFORMANCE

Important to any waste solidification system are the auxiliary systems (primarily the equipment located downstream of the solidification system to decontaminate the effluent streams from the solidifier). Demonstration of effluent decontamination is a primary objective of the WSEP tests. This objective was established to investigate the parameters affecting the performance of the decontamination equipment. In the final design of a waste solidification system, equipment must be capable of decontaminating secondary waste streams so that they are acceptable for reuse within the fuel reprocessing plant or for final release to the environment. For example, slightly contaminated acid can be recycled in a chemical reprocessing plant for use in fuel element dissolution and/or for possible use in solvent extraction scrub streams. In most cases, auxiliary equipment functions necessary in a reprocessing plant and similar functions in a waste solidification auxiliary system must certainly be integrated and combined to obtain overall economy.

Process auxiliaries needed for a solidification system must consist of equipment capable of:

- Preparing aqueous waste solutions to feed the solidifier.
- Treating process condensate for recycling.
- Decontaminating the process off-gas and recovering acid.

The WSEP auxiliary process system employs a waste evaporator, mist eliminator, evaporator condenser, acid fractionator, fractionator condenser, high efficiency filter, and caustic scrubber in series downstream from the solidifier condenser (see Figure 5.1). Effluents directly from any solidification process require recycling through the auxiliary system since they are not acceptable for discharge without further treatment. Eleven to 75% of the ruthenium fed to the spray

solidifier was volatilized from the solidifier, while less than 0.1% of nonvolatile radioactive species were entrained. The need to demonstrate how the treatment of effluents from solidification can be integrated with a fuel reprocessing plant or treated separately prompted the selection of three different operating modes in WSEP.

5.1 OPERATING MODES

It is likely that solidification will use the auxiliary equipment which already exists in a fuel reprocessing plant (e.g., a plant waste evaporator and acid recovery system), although two completely separate systems could conceivably be used. In either case, the auxiliary process equipment can be coupled to the spray (or other) solidifier with the evaporator operating in three basic modes of operation, designated in WSEP as Mode A, Mode B, and Mode C (see Figure 5.2). To date, Modes A and B were tested with the spray solidification process; Mode C has not yet been tested.

In Mode A operation, aqueous waste is fed directly to the solidifier without intermediate preconcentration. The solidifier process off-gases are condensed and the condensate is then collected and concentrated in the evaporator, but they are not recycled to the solidifier feed.

In Mode B operation, one batch of raw waste is preconcentrated in the evaporator simultaneously with the process condensate, while a previously concentrated and chemically adjusted batch of waste is fed to the solidifier from a holdup tank. During spray solidification Run SS-2, a modified Mode B was demonstrated. The raw waste to be concentrated was fed continuously to the auxiliary evaporator during the entire run while the process condensate was collected in a separate receiver.

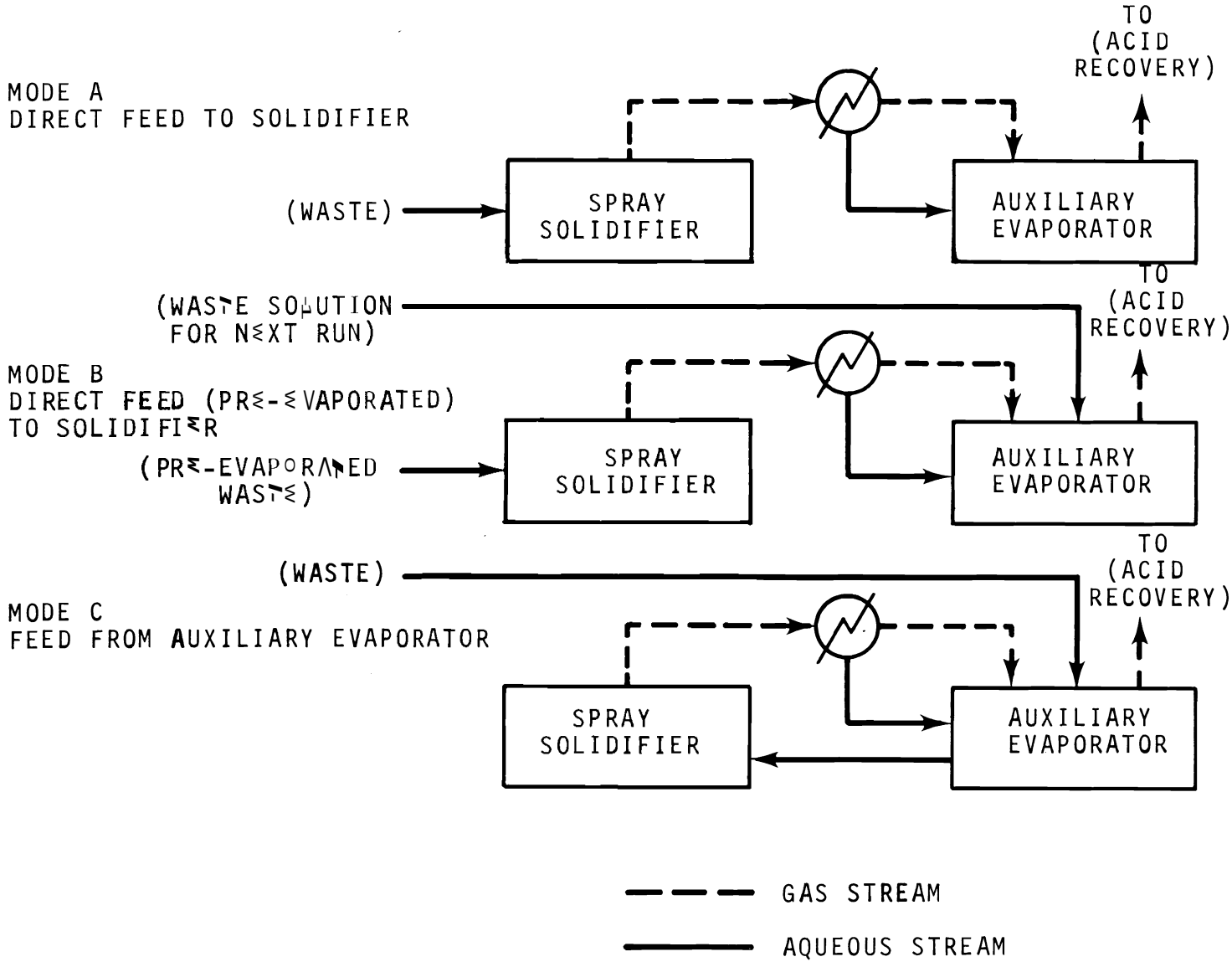

FIGURE 5.2 WSEP Process Mode Options

In Mode C operation, the solidifier and evaporator are operated as a close-coupled unit. Waste enters the evaporator where it is continuously mixed and concentrated along with the process condensate from the solidifier. This mixture is continuously fed to the solidifier. Thus the radioactive species in the condensed vapors from the solidifier are continuously recycled. This mode is identical to Mode B, with elimination of the separate tankage and holdup of the concentrated waste. If Modes B and C decontaminate the off-gas as well as Mode A, one less evaporator is required for Modes B or C. (Mode C has not been tested to date with the spray solidification process.)

Applications of the modes in a reprocessing plant are visualized as shown in Figure 5.3.

In WSEP, the overhead vapors leaving the auxiliary evaporator are further treated by condensing them and routing the resulting condensate and noncondensable gas streams to the acid fractionator where further decontamination and fractionation is carried out. The slightly acidic fractionator distillate is an intermediate level waste. The fractionator bottoms and condensed fractionator overheads are probably reusable in a fuel reprocessing plant. In all the demonstration runs, from 50 to 95% of the fractionator distillate (typically 80%) was recycled to the auxiliary evaporator to strip nitric acid from the evaporator bottoms while maintaining the evaporator bottoms at low acidity (less than 6M HNO_3). The low acidity in the evaporator bottoms and evaporator overheads reduces ruthenium volatilization from the evaporator. The noncondensable gases leaving the fractionator condenser are filtered, scrubbed, and filtered twice again prior to release to the atmosphere.

To evaluate the performance of the WSEP auxiliary system, decontamination factors were determined at each stage of the

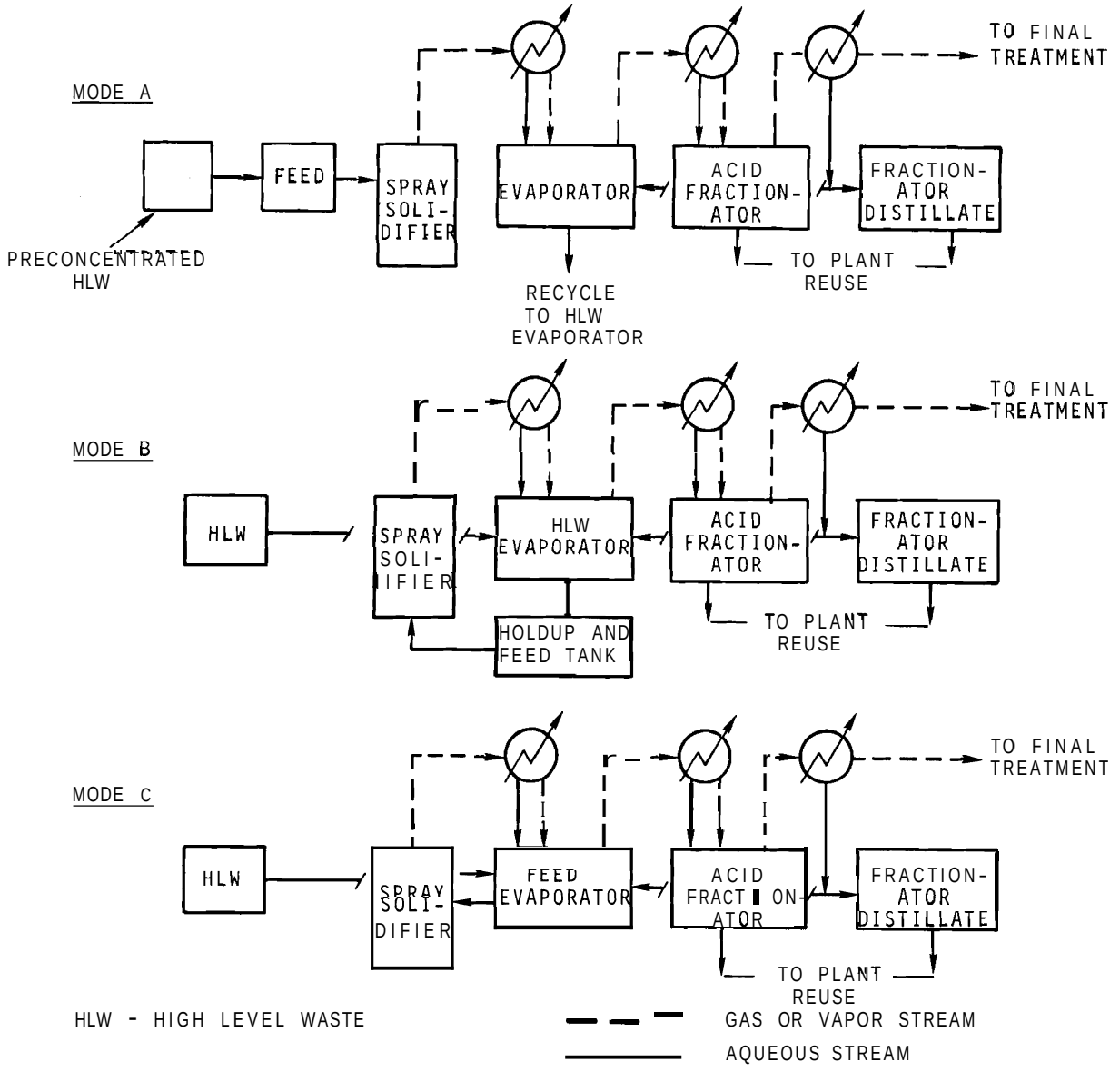

FIGURE 5.3. **Operating Mode Applications in a Reprocessing Plant**

system. Typical data for Mode A operation for the auxiliary system is summarized in Table 5.1. Run SS-2 was the only run made with a Mode B operation modified by routing the solidifier condensate to a separate tank, and due to insufficient data obtained during this run, good evaluation of Mode B operation is not available. However, the radionuclide content in all streams is generally expected to be less during Mode A operation than for other operating modes. Although waste solution is fed directly to the auxiliary evaporator during Modes B and C, ruthenium concentration in the evaporator effluent depends more on other factors such as acid concentration in the evaporator, evaporator boilup rate, and the fraction of ruthenium volatilized from the solidifier. Thus, the difference in ruthenium concentration in the evaporator and fractionator effluent streams with the different operating modes is generally less than the difference between the ruthenium concentration in the evaporator and can be minor. During Mode A operation, the evaporator bottoms is an additional effluent stream which must be recycled back to the waste concentrator in a fuel reprocessing plant. In Mode B and C operation, the evaporator bottoms are mixed with incoming waste.

The radionuclide content in the acid fractionator bottoms and distillate will probably allow these streams to be reused in a fuel reprocessing plant. The acid fractionator bottoms can probably be reused in fuel dissolution and in the first cycle solvent extraction scrub solution, and thus will not require further cleanup. The acid fractionator distillate can also probably be reused in the first cycle of the fuel reprocessing plant. In order to be released to the environment, the distillate stream would require additional decontamination by factors as high as 100,000.

Mode C operation was not demonstrated because provisions are not included in WSEP for continuous injection of melt-making

TABLE 5.1. Typical Effluents During Mode A Operation[a]

Stream	Solution	Volume, liters/ liter feed	Radioactive Ruthenium, Ci/Ci in Feed	Gross Radioactivity Less Ruthenium Ci/Ci in Feed	Potential Disposal
Evaporator Bottoms	5M HNO_3	0.5[c]	7.2×10^{-1}	9.4×10^{-4}	Recycle to fuel reprocessing plant waste concentrator
Acid Fractionator Bottoms	9M HNO_3	0.14	4.7×10^{-3}	7.7×10^{-7}	Reuse in fuel reprocessing plant
Fractionator Distillate	0.06M HNO_3	0.6	3.8×10^{-5}	3.8×10^{-9}	Reuse in fuel reprocessing plant
Scrubber Bottoms	2M to <0M NaOH[b]	0.5	5.2×10^{-5}	3.0×10^{-8}	Intermediate level treatment or combine with high level waste
Final Off-Gas to Stack[d]	Air	---	$<2 \times 10^{-10}$	$<1 \times 10^{-12}$	To atmosphere

a. Data were taken from Spray Solidification Runs SS-4, 5 and 6.

b. The 2M NaOH was completely neutralized during each run.

c. A working volume of 300 liters is assumed to be in the evaporator. This volume is present at start of run and must either be continuously recycled or batch recycled to the feed.

d Based on a background activity of $<2.4 \times 10^{-6}$ Ci/wk for ruthenium and for total radioactivity less ruthenium.

additives to the concentrated high level waste from the evaporator. (Boiling the chemically-adjusted feed could possibly cause undesirable and excessive solids precipitation.) Since the basic difference between Modes B and C is the holdup time of the concentrated waste before it is fed to the solidifier, little incentive existed to add the necessary equipment for Mode C operation.

5.2 RUTHENIUM CONTROL

Ruthenium can easily be volatilized both during solidification and evaporation. Data from extensive observations of ruthenium volatilization and suppression of ruthenium volatilization in boiling nitric acid solutions have been plotted against distillate 'nitric acid concentrations in reference 1. Although correlations exist for very specific solutions, the range of volatilization for a constant distillate acidity ranges as much as five orders of magnitude, and depends largely on the net oxidizing potential due to the other ingredients in the solution. This range of values shows the complexity of ruthenium behavior. Ruthenium tetroxide (RuO_4) has been established[1,2] as the principal volatile form of ruthenium from boiling nitric acid solutions. Several general relationships apply to the volatilization of RuO_4:[1,3]

- Decreasing the concentration of nitrate ion in the bottoms and the corresponding overheads decreases the volatilization of ruthenium.
- Introducing other oxidants into the nitric acid solution increases ruthenium volatilization. Similarly, introducing reductants (e.g., sugar) into the solution suppresses volatilization.
- Increasing the temperature of acidic solutions to the boiling point increases the vapor pressure of RuO_4 and, correspondingly, the volatilization of RuO_4.

By controlling the nitric acid concentration in the overheads from the WSEP evaporator to less than 1.0M during the first six pot calcination and phosphate glass runs, volatilization of ruthenium from the evaporator was reduced and typically kept below 4% of that present in the evaporator.[4,5]

Figure 5.4 shows the accumulation of radioruthenium (^{106}Ru) in the WSEP auxiliaries during Mode A operation. No similar data were available from Run SS-2 which used a modified Mode B. During the six spray solidification runs, 11 to 76% of the ruthenium fed to the solidifier was volatilized from the solidifier and accumulated in the auxiliary evaporator.

During the first six spray solidification runs, the auxiliary evaporator was operated at a bottoms concentration of 2 to 5M total nitrate ion (which give an overheads concentration of 0.1 to 0.5M nitric acid) to serve as a decontamination stage between the spray solidification process and the nitric acid fractionator. Table 9.2 in the Appendix lists most of the average operating conditions for the evaporator, as well as for the other auxiliaries. Part of the data for the evaporator are summarized in Table 5.2 to show the effects of evaporator content, overheads acid concentration, and chemical reductant (sugar) addition on ruthenium decontamination factors (DF). The cumulative ruthenium DF (DF_c)[a] across the evaporator varied from a low of 73 to a high of 890 under a variety of operating conditions.

During Runs SS-1 and SS-2, an aqueous reducing solution of sugar was added at 0.13 and 0.17 moles/hr, respectively, to the evaporator. During Run SS-6, 0.77 moles/hr of sugar was added during the last 38% of the run. The sugar addition apparently did not help decrease ruthenium losses from the

(a) Total ruthenium curies in the evaporator bottoms at end of run from any source/total curies gained in the fractionator.

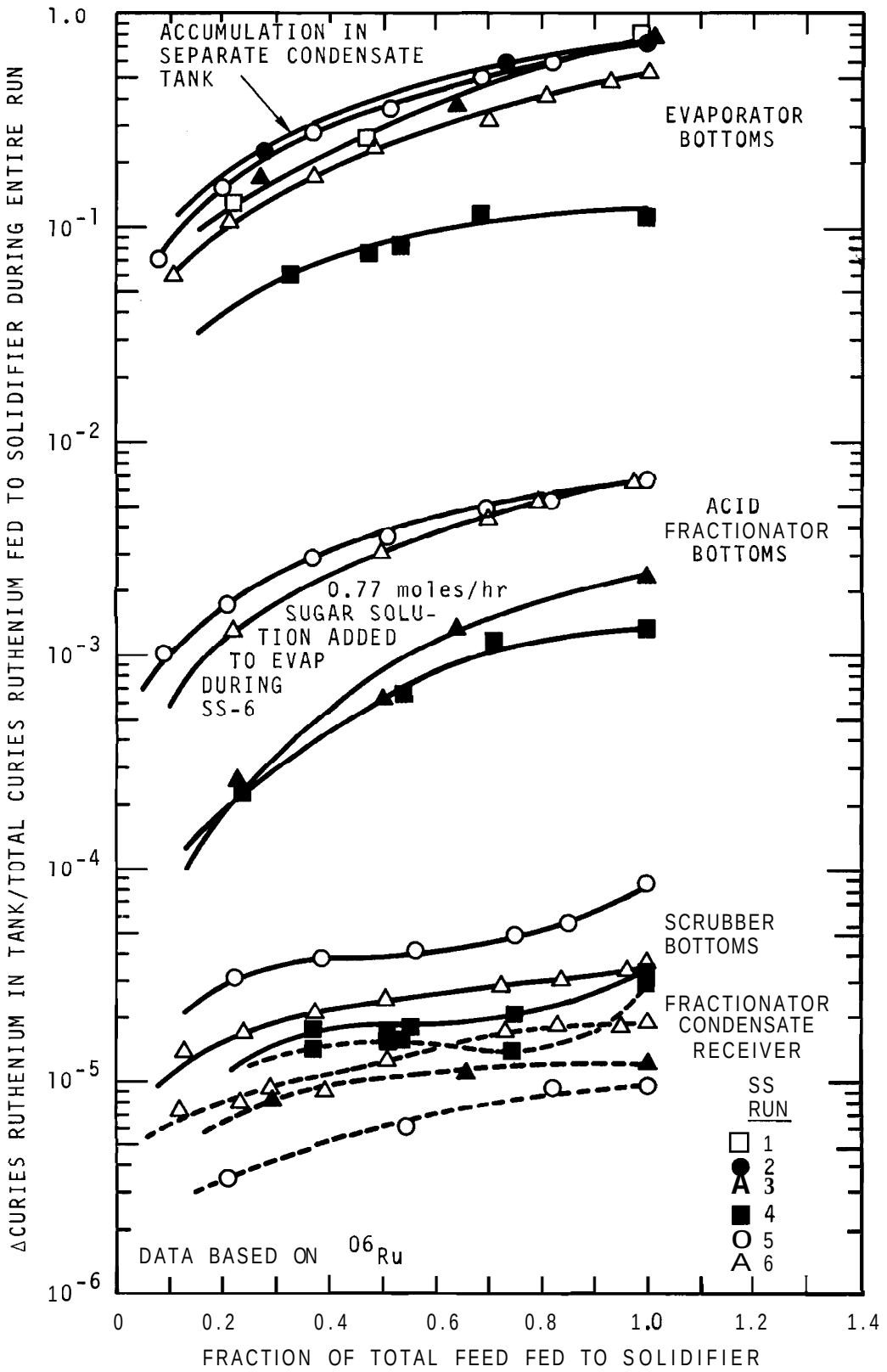

FIGURE 5.4. **Accumulation of Ruthenium in WSEP Auxiliaries**

TABLE 5.2. Decontamination Factors for Radioactive Ruthenium and Cerium

SS Run	Mode	Solution in Evaporator	Additive	Evaporator: HNO_3 Average Acidity, M Bottoms	Evaporator: HNO_3 Average Acidity, M Distillate	Evaporator: Decontamination Factors[a] Cumulative Ruthenium[b]	Evaporator: Decontamination Factors[a] Cumulative Cerium[b]	Evaporator: Decontamination Factors[a] Instantaneous Cerium[c]	Acid Fractionator: HNO_3 Average Acidity, M Bottoms	Acid Fractionator: HNO_3 Average Acidity, M Distillate	Acid Fractionator: Decontamination Factors[a] Cumulative Ruthenium[d]	Acid Fractionator: Decontamination Factors[a] Cumulative Cerium[e]
1[e]	A	Nitric acid, solidifier condensate and sugar solution	0.13 moles/hr sugar and stripwater	3.0	0.1	890	---	---	7.7	0.06	2000	---
2	B-Mod (f)	Raw waste plus sugar solution	0.17 moles/hr sugar and stripwater	1.5	0.03	630	---	---	10	0.06	1300	---
3	A	Nitric acid plus solidifier condensate	stripwater	4.6	0.4	320	25000	1000 to 10,000	6.0	0.05	200	110
4	A	Nitric acid plus solidifier condensate	stripwater	5.0	0.44	76	1700	10,000	9.3	0.09	47	375
5	A	Nitric acid plus solidifier condensate	stripwater	5.0	0.50	110	1500	1000	8.7	0.05	120	3200
6	A	Nitric acid, solidifier condensate and sugar solution	0.77 moles/hr sugar last 38% of run and stripwater	4.9	0.48	73	1600	10,000	8.7	0.10	310	<500

a. DF's are based on ^{106}Ru and ^{144}Ce-Pr

b. Total curies in evaporator bottoms at end of run from any source/total curies gained in the acid fractionator bottoms.

c. Instantaneous concentration in evaporator bottoms/instantaneous concentration in evaporator distillate.

d. Total curies in acid fractionator bottoms at end of run from any source/total curies gained in the fractionator distillate receiver tank.

e. Instantaneous concentration in fractionator bottoms/instantaneous concentrates in fractionator distillate.

f. Run SS-2 used a modified Mode B operation - solidifier condensate was accumulated in a separate receiver.

auxiliary evaporator since the accumulation rate of ruthenium in the fractionator remained constant with or without sugar addition, and the ruthenium DF_c was the lowest obtained (73). The DF_c of 890 and 660 during SS-1 and 2, respectively, were probably high because of poor sampling techniques.[a] Therefore, these values are not regarded as an indication of a decrease in ruthenium volatilization with sugar addition. In addition, steam added to the solidifier condenser, at about 15 liters/hr during SS-6 did not increase the ruthenium scrubbing efficiency. (" One to 5% of the equivalent ruthenium present in the evaporator bottoms at the end of the run accumulated in the fractionator bottoms. Overall, this range was typical of ruthenium volatilized from the evaporator during the phosphate glass runs[5] where 3% of the ruthenium present in the evaporator accumulated in the fractionator bottoms. However this represents a factor of about 20 in decrease of performance over similar data obtained during the first six pot calcination runs.[4]

Generally, instantaneous ruthenium DF's (DF_i)[b] across the evaporator for the WSEP runs varied inversely with the nitrate concentration in the evaporator bottoms and nitric acid concentration in the resulting distillate as shown on Figure 5.5.[4,6] This plot also includes data from the first six pot calcination runs[4] and the first six phosphate glass solidification runs.[5] During the pot and phosphate glass solidification runs, there was a definite increase in DF_i's with decreasing overhead acidity. However, during the spray solidification runs there was no apparent correlation of DF_i and the distillate acidity and the DF_i's were consistently low.

(a) The auxiliary evaporator and fractionator bottoms were unagitated during sampling therefore nonrepresentative samples were probably taken,

(b) Instantaneous ruthenium concentration in the evaporator/ instantaneous concentration in the evaporator distillate.

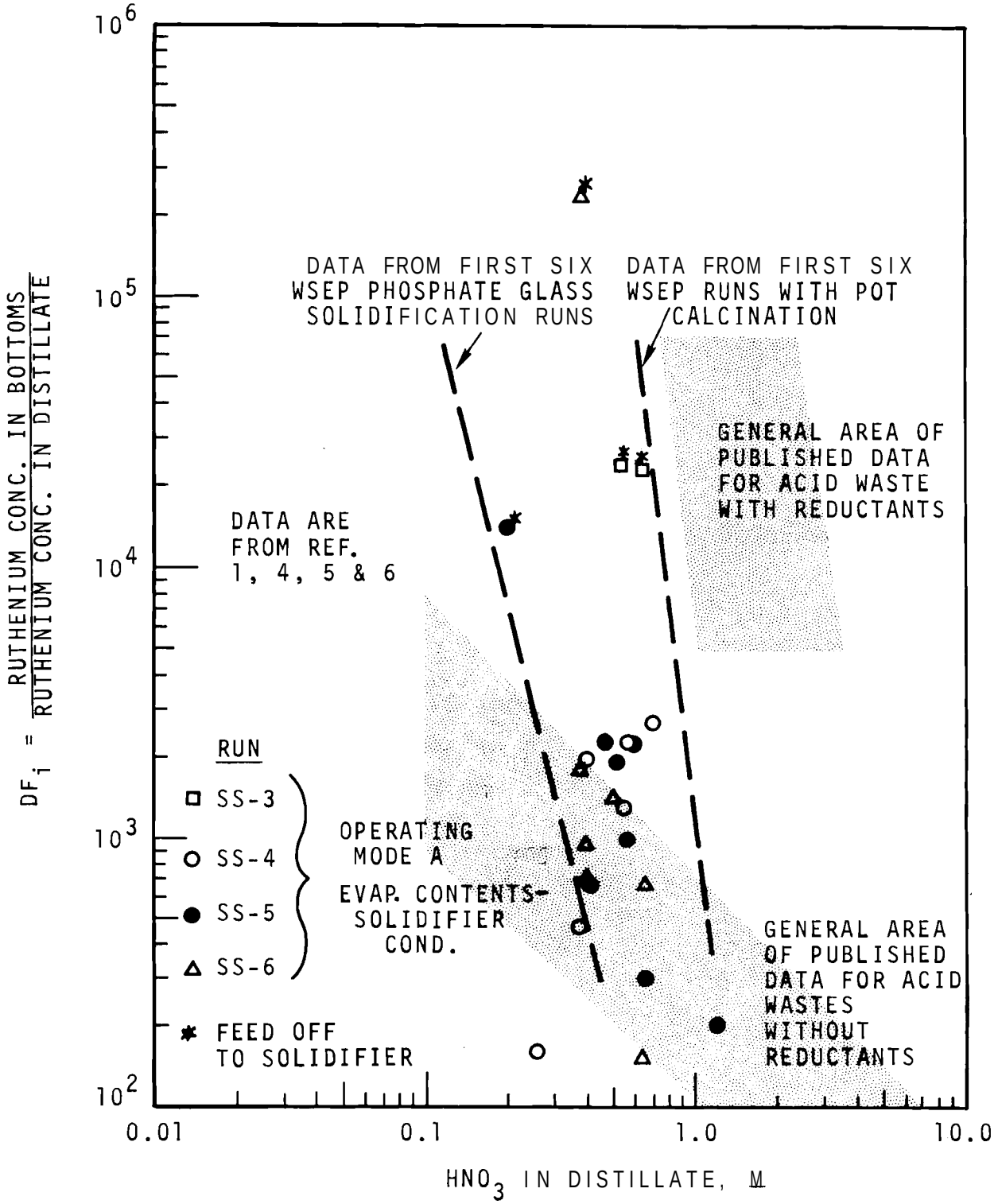

FIGURE 5.5. **Ruthenium Volatilization from the WSEP Auxiliary Evaporator**

These generally low DF_i's for ruthenium are attributed to vapor phase flow of ruthenium from the solidifier which was only partially scrubbed in the solidifier condenser and evaporator and was again partially scrubbed in the evaporator condenser. This vapor phase flow of ruthenium apparently had less effect on the DF_i's during the first six phosphate glass runs since typically less than 1% of the ruthenium fed to the denitrator was volatilized from the denitrator and accumulated in the evaporator. During the first six pot calcination runs there again was not as much apparent vapor phase flow of ruthenium.

Most of the ruthenium that escapes the evaporator to the overhead distillate is caught in the acid fractionator where additional decontamination occurs. Ruthenium DF_c's across the acid fractionator varied from a low of 47 in Run SS-4 to a high of 2000 in Run SS-1, while the acid fractionator accumulated from 0.13% to 0.65% of the equivalent ruthenium fed to the solidifier. The fractionator nitric acid concentration was maintained at approximately 6 to 10M, and the resulting fractionator overheads acidity ranged from 0.05 to 0.1M using a tower internal reflux ratio varying from 0.1 to 0.5. The overhead acidity was higher than expected as a result of nitrogen oxides again being partially scrubbed by the fractionator condenser. The ruthenium DF_i's across the fractionator ranged from less than 100 to greater than 1000. The low DF_i's probably were caused by contaminated samples of the condensate stream. Typical Acid Fractionator Operation is shown in Figure 5.6.

Most of the ruthenium that escapes the WSEP acid fractionator to the overhead distillate is caught in the fractionator distillate tank or recycled to the evaporator as strip water. During the six runs, from 0.001% to 0.003% of the equivalent ruthenium fed to the solidifier accumulated in the fractionator distillate receiver. Average strip water rates

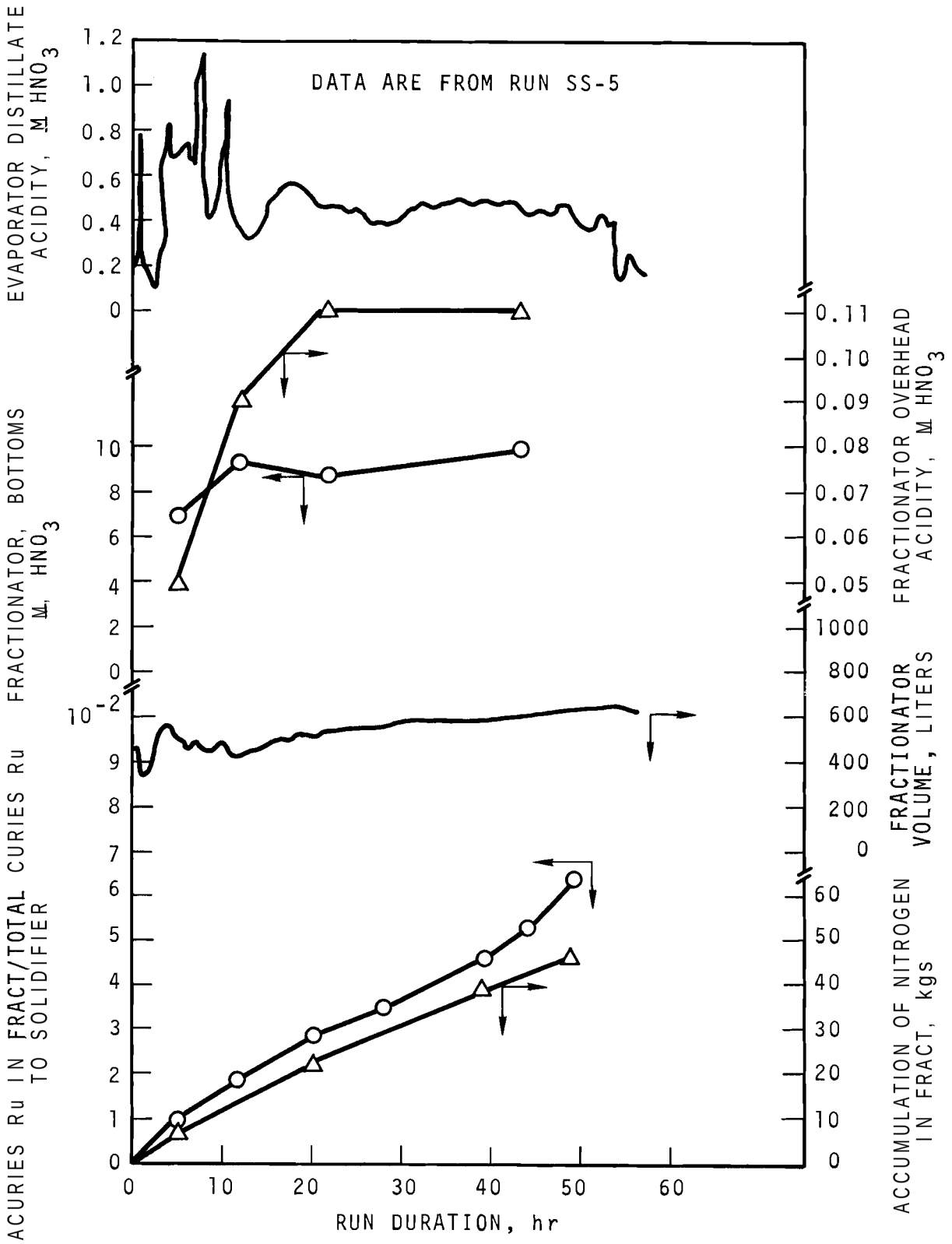

FIGURE 5.6 Typical Acid Fractionator Operating Conditions

and boiloff rates for evaporation are listed in the Appendix, Table 9.2. As shown in Figure 5.5, the relatively large accumulation of ruthenium in the scrubber (from 0.003% to 0.009% of equivalent ruthenium fed to the solidifier) indicates that the overall efficiency of the head-end auxiliary equipment (evaporator, acid fractionator, and overhead condensers) is relatively low for removal of the vapor phase ruthenium.

The final aqueous process effluent (fractionator distillate) and the caustic scrubber bottoms contained typically about 0.001 Ci/liter radioruthenium. This concentration of radioruthenium is above 10CFR20 release limits[7] by a factor of about 100,000.

During the first six spray solidification runs, no analyses were available for the gas streams entering or leaving the auxiliary scrubber, except for the gas stream entering the stack. The 10 to 20 scfm of noncondensable gases from the WSEP solidifier and the auxiliaries are discharged into the main building ventilation system where they are mixed with about 120,000 scfm before entering the stack. This large dilution by the main building ventilation flow has reduced the ruthenium concentration to below the detection limits for the available counting equipment. During these six spray sclidification runs, the ruthenium in the stack gases was less than 2.4×10^{-4} Ci/week which is well below 10CFR20 release limits[7] by a factor of about 2500 or more.

Recent studies of ruthenium data for the spray solidification runs have shown that as much as 1% of the ruthenium fed to the solidifier leaves in the solidifier condenser off-gas due to inadequate scrubbing in the condenser while 99% of the ruthenium volatilized from the solidifier is condensed. Up to 75% of the ruthenium fed to the solidifier is volatilized and is condensable. The condensable ruthenium fraction is collected in the auxiliary evaporator bottoms while the remaining 1% is

partially scrubbed by the overhead equipment (particularly the evaporator and fractionator tower and condensers). The remaining fraction is removed by the caustic scrubber at the end of the in-cell off-gas system.[11]

The solidifier off-gases pass through a high efficiency filter prior to entering the auxiliary scrubber; therefore most of the particulate ruthenium should be removed by the filter. Consequently, the ruthenium which enters the auxiliary scrubber is probably in the tetroxide or gaseous form. Since completion of these first six spray solidification tests, gas sampling equipment has been installed to collect samples of the off-gases leaving the solidifier condenser, the evaporator condenser, the fractionator condenser, the absolute filter, and the caustic scrubber. Data from this sampling equipment will be obtained during the next series of spray solidifier demonstrations.

The primary factor influencing the evaporator and the fractionator DF's is the fraction of the volatilized ruthenium and the mechanism by which the ruthenium is trapped in the towers and overhead condensers. A mechanism based on the diffusion of the airborne ruthenium from the gas stream to the wetted walls of a downdraft condenser was assumed in the mathematical modeling of the WSEP auxiliary off-gas train. () The diffusion model for the condenser suggests that the inadequately scrubbed ruthenium leaving in the solidifier condenser off gas has a greater influence on the DF's across the evaporator and the fractionator than does the smaller quantities of ruthenium volatilized and/or entrained from the evaporator and the fractionator bottoms under normal operating conditions. The mathematical model of the behavior of the airborne ruthenium suggests that prior to the high efficiency filters and the scrubber in the auxiliary off-gas train, the auxiliary equipment is not ideally suited for the removal of ruthenium.

Preliminary gas samples of the solidifier condenser off gases suggest that additional or modified equipment is needed to remove more of the gaseous and particulate ruthenium from the spray solidifier at its condenser. The use of improved gas-liquid contacting equipment (a condenser packed with efficient contacting surfaces) for gas removal and a high efficiency filter for particulate removal should substantially improve the ruthenium DF's. Such a system is under design for use in the next series of spray solidification demonstrations.

In conclusion, the ruthenium decontamination factors for the effluent from spray solidification are largely influenced by the scrubbing efficiency of the towers and overhead condensers for removal of ruthenium vapors.

5.3 CONTROL OF OTHER RADIONUCLIDES

In processing PW-1 and PW-2 waste with the spray solidifier, less than 0.1% of nonvolatile constituents represented by ^{144}Ce-Pr were entrained from the solidifier and accumulated in the auxiliary evaporator. An exception to this occurred in Run SS-3 when the solidifier filters failed and 10% of the nonvolatile constituents were entrained. cumulative decontamination factors (DF_c) for nonvolatiles across the WSEP evaporator ranged from 1.5×10^3 to 2.5×10^4. Instantaneous decontamination factors (DF_i's) for nonvolatiles across the auxiliary evaporator ranged from about 10^3 to 10^4. These data agree quite well with data from the first series of phosphate glass[5] and pot calcination[4] runs.

Typical entrainment from the evaporator was less than 0.06% of the nonvolatiles present in the evaporator. During Run SS-3 when the filters failed, the added factor of 100 increase in entrainment from the spray solidifier did not apparently affect the DF_c or DF_i across the evaporator or fractionator. The overall DF was typically 10^5 for cerium

from the original aqueous waste through the auxiliary system to the recovered acid in the fractionator. Comparable cerium DF's for the fractionator distillate were typically 10^7. Insufficient data were available for plotting a curve of accumulation of nonvolatile radionuclides in the auxiliaries.

The WSEP spray solidifier off-gases (including about 7 scfm of air from inleakage) contain an average of about 13 scfm noncondensable gases, which must be decontaminated before they are released to the environment. The presence of this noncondensable gas phase significantly affects decontamination. Therefore, in a commercial application, efforts should be made to keep air addition and inleakage to a minimum. The high air flow through the system probably caused some increase in ruthenium carryover through the auxiliaries. Overall, the auxiliary system removed enough nonvolatile constituents from the noncondensable gas flow to reduce it to levels that were insignificant compared to radioruthenium.

The noncondensable air flow had a slight adverse effect on the nitric acid stripping efficiency in the fractionator. Concentrations of 0.05M HNO_3 were consistently produced in the fractionator overhead distillate when the bottoms were controlled at less than 10M HNO_3. (See Table 5.2 and Appendix 9.2.) Noncondensable off-gases from the process including solidifier atomizing air and inleakage were approximately 2000 liters (STP) for each liter of aqueous waste processed. Approximately half of this gas flow resulted from inleakage and instrument purge air and half resulted from atomizing air to the spray solidifier. The off-gas leaving the fractionator condenser was filtered, scrubbed, filtered twice again, and then discharged to the atmosphere. As with radioactive ruthenium, the nonvolatile constituents were well below 10CFR20 release limits following dilution by other CMEL Building and process air.[7]

5.4 NITROGEN BALANCE

From 40 to 75% of the nitrogen that volatilized from the solidifier was removed from the off-gases in the solidifier condenser. The remaining 60 to 25% was probably present as oxides of nitrogen which were carried through the condenser in the gas phase. The increased absorption of nitrogen (75% during SS-6) and the decreased loss of nitrogen oxide was attributed to the approximately 15 liters/hr of steam sprayed into the solidifier condenser. The specific changes of nitrogen content at the various points in the auxiliary system are listed in Table 5.3. The off-gas scrubber containing from 1 to 2M NaOH absorbed from 12 to 22% of the equivalent nitrogen fed to the solidifier. During all the six spray solidification runs, the off-gas scrubber solutions were completely neutralized by oxides of nitrogen, and an unknown amount of nitrogen may have been lost to the stack as indicated by the failure to account for 5 to 12% of the nitrogen added to the system.

Figure 5.7 shows the typical accumulation of nitrogen and ruthenium in the caustic scrubber (taken during Run SS-4 and 5). During Run SS-4, 22% of the nitrogen was recovered in the scrubber solution. The nitrogen oxides neutralized the scrubber solution at a constant rate of 0.2 moles NaOH/hr until about 70% of the run was comlete, at which time the bottoms were completely neutralized. At this time, the nitrogen accumulation rate in the scrubber solution decreased sharply. Extrapolating from the first part of the run, 28% of the nitrogen would have been removed in the scrubber, if the scrubber solution had not become acidic before the end of the run. The scrubber is also used to scrub the off-gases from the No. 2 vent system (or vessel vent). These vessel vent gases dilute the WSEP off-gases (including motive air to the process vent jet) by about a factor of two. Therefore, the nitrogen losses from the WSEP

TABLE 5.3. Nitrogen Balance for First Six Spray Solidification Runs

	Net Change, kgs N					
SS Run	1	2	3	4	5	6
Feed (TK-114)	-43	-90 [b]	-47 [d]	-33	-69	-66
Evaporator (TK-113)	+5.9	+31 [c]	+3.4	+2	+4.9	-5
Acid Fractionator (TK-115)	+32	+50	+34	+21	+46	∿+50
Fractionator Distillate (TK-116)	---	+0.7	+0.5	+0.3	+0.3	+2.1
Scrubber (TK-118)	---	+3.3	5.4	+7.4	+12	+13
Product	+<0.01	+<0.01	+0.04	+0.02	+0.04	---
Percent Recovery [a]	88	94	93	94	91	91
Percent Nitrogen in Scrubber	---	---	12	22	17	20

a. Based on nitrogen in feed to all tanks.

b. Includes 31 kg during Mode B operation (TK-112 to TK-113).

c. Includes 37 kg collected separately in solidifier condensate tank (TK-117).

d. Includes 25 kg fed to solidifier condenser (E-111).

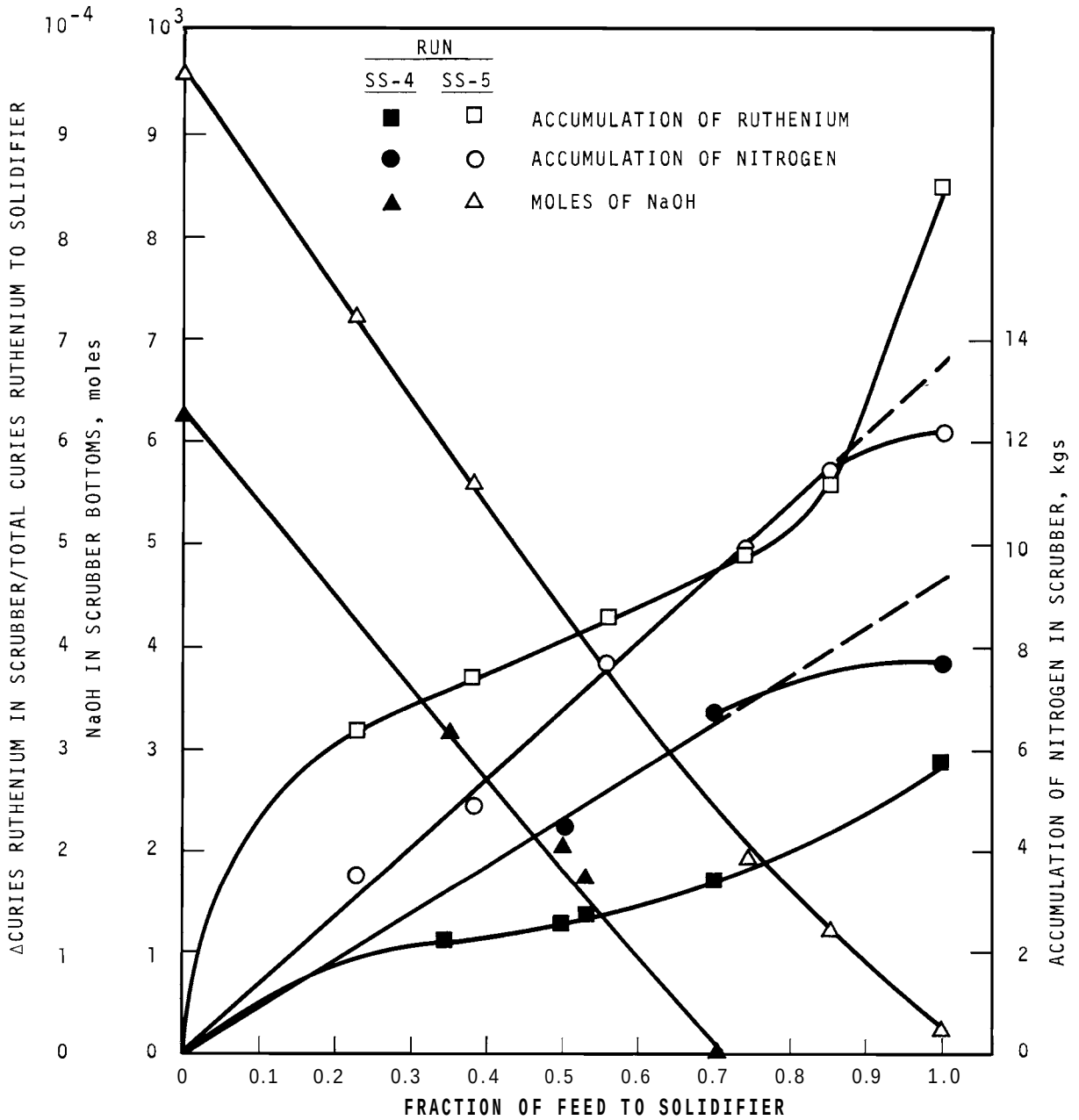

FIGURE 5.7. Typical Scrubber Operating Conditions

system could be reduced by rerouting the vessel vent gases around the scrubber and by increasing the caustic in the scrubber bottoms by about a factor of two.

5.5 HANDLING OF PUREX WASTE

Fission product waste solutions contain precipitates which may interfere with liquid transfer, storage, or evaporation. While amorphous, noncaking precipitates can be handled at concentrations up to 50 volume percent, in WSEP, very small quantities of heavy, caking precipitates can plug pipes and equipment. Thus, proper design and operation require knowledge of the precipitate characteristics. The precipitates present in a given waste solution largely depend on the chemical flowsheet used in the reprocessing plant and during the subsequent treatment of the waste. In general, the PW-1 and PW-2 solutions used in demonstration tests SS-1 through SS-6 represented typical Purex plant wastes. That is, they contained the full gamut of expected precipitate types, although the comparative amounts of precipitate varied with each waste.

The volume of settled solids in actual samples of the feed solutions used in the six spray solidification runs was generally about 30%. The majority of the solids encountered in the spray solidification feeds contained molybdenum, phosphorous, and zirconium, the precipitates were probably zirconium phosphomolybdate compounds. The solids are hydrous, amorphous precipitates which have never been observed to cake in the laboratory even after standing several months. In PW-1, the phosphomolybdate compound was predominant and the solids were gelatinous and noncrystalline. In the sulfate-containing PW-2 waste, the precipitate remained gelatinous, but close inspection showed the presence of small needle-shaped crystals (probably sodium-rare-earth sulfates). When the PW-1 wastes were continuously boiled, the precipitates lost their gelatinous characteristics and became a very loose, easily-suspended

precipitate (even after prolonged settling). Continuous boiling of the PW-2 waste has not been attempted, and with this possible exception, the handling of spray solidification feeds in feed tanks, evaporators, and transfer lines is not considered to be a major problem.

5.6 GENERAL PERFORMANCE OF AUXILIARIES

Auxiliary equipment performance for acid recovery was satisfactory during the six spray solidification demonstration runs, except for some feed pump problems and a gradual deterioration of the plastic insulation on the electrical and instrument wiring within the cell. All six runs were completed; only the third run was interrupted during the startup period as the result of a bad seal in the feed pump. Also during Run SS-3, the feed tank agitator failed due to failed insulation on an electrical power lead. Table 5.4 contains a compilation of the general operating performance of the auxiliary equipment.

5.6.1 Pumps

The feed pump used during spray solidification demonstration Runs SS-1 and SS-2 was the same as the pump used during the first pot calcination run.[4] The pump was a canned-rotor, in-line pump[12] with boron carbide seals and boron carbide bearings with graphite thrust faces. Water lubricant to the bearings was recirculated through a small external reservoir and a jacketed cooler, but was separated from the process fluid by a mechanical seal in the pump. When this type of pump failed* during the first phosphate glass demonstration[5] a modified in-line pump assembly incorporating a conventional centrifugal pump was installed. This type of pump was used during the remainder of the spray solidification runs. The

* The pump shaft seized after 84 hours of operation.

TABLE 5.4. WSEP Auxiliary Equipment Operating Summary (Through Spray Solidification Run SS-6)

Equipment	Construction Material	Temp, °C	Avg. Press., in. Water	Chemical	Operating Time, hr	Remarks
Feed tanks	304L SS	25 to 60	-5	Darex, Purex, TBP-25 Type Waste	3230	Agitators used 2540 hr. Agitator power lead failed during SS-3
Condensate tanks	304L SS	25	-10 to 20	H_2O, Dilute HNO_3	2760	Submerged pump used 1210 hr.
Caustic scrubber	304L SS	25 to 40	-10 to 20	Dilute NaOH	2760	Circulating pump used 1200 hr.
Evaporator	A-55 Ti	110	-10 to 20	Boiling Waste	2560	Minor titanium corrosion caused by fluoride ion during early DVT runs.
Acid Fractionator	A-55 Ti	115	-10 to 20	8 to 12M HNO_3	2560	
Solidifier Condenser	A-55 Ti	100 to 200	-10 to 20	HNO_3 Vapors	2720	Localized vapor entry corrosion (up to 0.06 in.) during early DVT runs 3 and 4.
Evaporator Condenser	A-55 Ti	100 to 110	-10 to 20	Dilute HNO_3	2560	
Fractionator Condenser	304L SS	100 to 110	-10 to 20	H_2O, Dilute HNO_3	2560	
Feed Pumps	304L SS	60	500	Adjusted Waste	1255	Changed from the original inline pump to a conventional pump prior to run PG-3
					740	Dual pump jumper used during last four spray runs (see Appendix, Table 9.)
Flowmeters			300 to 1000			
Feed, magnetic	Vitreous Enamel Liner. Platinum sealed electrodes. Inconel flowtube.	30 to 80	∿100	Concentrated Wastes	1890	Occasional intermittant readings due to lead wire failures. Also frequent shifts in calibration and loss of sensitivity.
Condensate, magnetic	(same as above)	25 to 40	∿100	Condensate	2300	Two units (1160 hr/unit) did not operate during last four spray runs primarily due to electrical lead failure.
Condensate, electronic rotameter	(same as above)	30 to 80	-10 to -30	Dilute Acid Water	2450	Meter was reliable for the final process condensate.
Absolute Filters	Glass-asbestos with aluminum separators in 304L SS housing.					
Process Vent		50 to 70	-20	Predominantly Air, Nitrogen Oxides		No filter changes.
Vessel Vent		50 to 70	-10	Predominantly Air		Changed six times; mostly due to excessive moisture. 74 days was shortest duration between changes.

pump contained double mechanical, water-lubricated seals with graphite rotating rings. With the new pump, isolation valves were installed on the pump jumper to prevent loss of feed in case of seal failure. These valves also allow remote pump replacement in approximately 4 hours without transferring the feed out of the feed tank.

Two pump failures occurred with this new pump during the last four spray solidification runs* because of seal and bearing failures; however, the pumps have a longer life expectancy than the canned-rotor pumps if they are thoroughly flushed after each run. Flushing is very important for increased pump life. Some of the difficulty with pump seal failures seem to have been caused by the seals drying out when the pumps were not operating. An extended pump operating test has not yet been performed.

5.6.2 Solidifier Condenser

The failure of the spray solidifier filters during Run SS-3 resulted in the carryover of appreciable quantities of calcine into the process off-gas train (about 10% of the solids in the feed to the solidifier). The inlet and outlet vent lines of the solidifier condenser became partially plugged by the calcine, and the condenser drain line and condensate sampler plugged several times during the run. Although the entrained calcine caused most of the plugging problems, the 1-inch diameter outlet vent line has several right-angle bends and joints which restrict gas flow. Consequently, prior to Run SS-4, a second vent line was installed in parallel with the existing vent line. The new vent line was made from 1.5-inch Schedule 40 304L stainless steel pipe. This new vent line decreased the pressure drop from the solidifier condenser to the evaporator by a factor of about 3, (from about 3 to

* See Table 9.6 in Appendix for feed pump operating experience.

1 inch of water) thus increasing the venting capacity. Both the old and new vent lines discharge into the vapor space of the auxiliary evaporator.

5.6.3 Feed Control System and Flow Measurement

Operation of the feed control system over the range of 5 to 30 liters/hr used was not good, because measurement of feed flow to the solidifier with a magnetic flowmeter (the sensing element in the control loop) was usually inadequate. Difficulties experienced with magnetic flowmeters in WSEP have included loss of signal, frequent shifts in calibration, and failure of electrical wire insulation. The wire insulation failures are described below. Another obvious difficulty with magnetic flowmeters for metering wastes is the small hole size required for metering of the small flow rates in WSEP (5 to 30 liters/hr). A 1/2-inch Hammel Dahl valve with a No. 5 spline trim was used for control of the feed to the solidifier. Solids in the feed readily pass through the control valve. Special flushing procedures are used prior to and after feeding to keep the feed lines satisfactorily free of solids.

5.6.4 Evaporator and Acid Fractionator

The evaporator and acid fractionator performed satisfactorily. In both vessels, specific gravity was used as the primary control for maintaining the desired bottoms concentration, although temperature was used on some occasions. Conductivity of the condensed evaporator overheads was used to measure the overhead acidity and thereby control the strip water recycle flow to the evaporator to maintain a given nitric acid concentration in the overheads.

The specific gravity and liquid level dip tubes of the evaporator would occasionally plug as they did during the first pot calcination[4] and phosphate glass solidification runs.[5] Although most of the plugging was eliminated by flushing the

dip tubes with alternate solutions of nitric acid and caustic between runs, the dip tubes should be made more reliable for continuous operation, possibly by continuous or semicontinuous wet purging. More recently, promising results have been obtained by venting the dip tubes for approximately 10 out of every 15 minutes to allow the waste solution to rise into the dip tubes and, in effect, wash out the tubes.

To minimize fluoride-induced corrosion of the titanium evaporator and fractionator vessels, chemical complexants are added to the vessels before each run. If pure nitric acid is to be boiled, aluminum nitrate is added to the evaporator and to the fractionator. When waste is boiled in the evaporator, enough iron, zirconium, and aluminum ionic complexants are present in the waste to inhibit corrosion.

5.6.5 Filters

Performance of the high-efficiency process ventilation filters was basically the same as that experienced during the first pot calcination and phosphate glass solidification runs; the high-efficiency filters in the process ventilation system performed well, while those in the vessel vent system required several changeouts because of buildup of excessive pressure drops (greater than 10 inches of water) which resulted when they became wet with acidic vapors. Inadequate preheating upstream of the filter had not sufficiently "dried" the gases. In all failed filters, the aluminum spacers between the filter material had seriously corroded. Since these first six spray solidifier runs, the secondary vessel vent system has been rerouted to ventilate through the vent system for the waste vault storage tanks of the C-MEL facility, and the original filter location has not been used.

5.6.6 Electrical and Instrument Wiring

The last four spray solidification demonstration runs of this 6-run series began at about the time when most of the plastic insulation on the hot cell electrical wiring had begun to fail (after 2 years of service). Most of the original wiring was insulated with linear polyethylene, a moderately radiation-resistant material. The linear polyethylene became brittle and broke, thereby causing wire breakage or insulation failure when the wires were bent. Less expensive Neoprene rubber has proved more satisfactory for wire covering in WSEP. Neoprene remains more pliable than the linear polyethylene and has a useful life of at least 2 years.

5.6.7 Sampling

Contamination of the low-level radioactive aqueous samples (i.e., those of the fractionator distillate and scrubber solutions) within the hot cell[5] was eliminated prior to the third spray solidification run by routing the sample lines outside of the cell to a new sampling station. Since representative samples of the WSEP auxiliary evaporator and acid fractionator were difficult to obtain unless the two tanks were boiling, start and end of run samples for these two tanks were obtained when the tanks were boiling. Incorporation of the above improvements led to improved data from samples by the start of the last four spray solidification runs.

Since the completion of these six spray solidification runs, gas sampling equipment has been installed to collect samples of process off gas at various points in the auxiliary system. Gas sample data will be obtained during the next series of spray solidification runs.

5.6.8 Material Balances

Specific material balance data for the six spray solidification demonstration runs are shown in the Appendix, Table 9.3. Except for ruthenium, the recovery of individual elements was good.

Chemical or radiochemical analysis for ruthenium in the ceramic product continued to be unreliable during the period of the first series of spray runs. Consequently, a total material balance for ruthenium was difficult to make. A ruthenium material balance was obtained by analysis of WSEP liquid streams for radioruthenium using a radiochemical gamma energy analyses (GEA). No unusual material balance discrepancies have been found with the WSEP auxiliaries when it is operated with the spray solidifier.

The overall material balances for the six spray solidification demonstrations are shown in Table 5.5.

TABLE 5.5. Overall Material Balances for Spray Solidification Runs

SS Run	Percent Recovery	
	Volume	Weight
1	---	92
2	---	103
3	87	88
4	92	92
5	87	87
6	96	94

REFERENCES FOR SECTION 5

1. Waste Solidification Program, Volume 1, Process Technology - Pot, Spray and Phosphate Glass Solidification Processes, edited by K. J. Schneider, BNWL-1073. Battelle-Northwest, Richland, Washington, August 1969.

2. Reactor Handbook, edited by S. M. Sloller and R. B. Richards. Interscience Publishers, Inc., New York, 1961. 2nd ed, vol. 2. "Fuel Reprocessing," Ch. 13 and 14.

3. A. S. Wilson. "Ruthenium Volatilization in the Distillation of Nitric Acid," J. Chem. Eng. Data, vol. 5, no. 4. October 1960.

4. J. L. McElroy, C. R. Cooley, W. V. DeMier, J. E. Mendel, J. C. Suddath and J. O. Blomeke. Waste Solidification Program Volume 4, Pot Calcination Performance During First Radioactive Tests in Waste Solidification Engineering Prototypes, BNWL-814. Battelle-Northwest, Richland, Washington, December 1968.

5. J. L. McElroy, J. N. Hartley, K. J. Schneider and R. F. Drager. Waste Solidification Program Volume 5, Phosphate Glass Solidification Performance During First Radioactive Tests in Waste Solidification Engineering Prototypes, BNWL-1185. Battelle-Northwest, Richland, Washington, January 1970.

6. Unpublished data from WSEP, Battelle-Northwest, Richland, Washington.

   RUN SUMMARIES

SS-1	April 1969	J. D. Moore
SS-2	June 1969	J. D. Moore'
SS-3	October 1969	W. R. Bond
SS-4	August 1969	M. R. Schwab
SS-5	January 1969	J. N. Hartley
SS-6	February 1969	A. S. Neuls and J. N. Hartley

7. Code of Federal Regulutions: Rules and Reşulations, Title 10: Atomic Energy, Part 20: Standards for Protection Aşainst Radiation, Appendix B, Table II, Columns 1 and 2. United States Atomic Energy Commission, August 9, 1966.

8. P. C. Owzarski. "Highlights in Spray Solidifier Runs SS-5, SS-6, and SS-7," Quarterly Progress Report, Research and Development Activities Fixation of Radioactive Residues, November, December, 1968, January, 1969, BNWL-1003, pp. 21-22. Battelle-Northwest, Richland, Washington, February 1969.

9. P. C. Owzarski and C. R. Cole. "Computer Simulation of WSEP," Quarterly Progress Report, Research and Development Activities: Fixation of Radioactive Residues, February, March, and April, 1969, BNWL-1074, pp. 20-22. Battelle-Northwest, Richland, Washington, May 1969.

10. W. R. Bond, J. N. Hartley, M. R. Schwab and W. K. Winegardner. "Radioactive Demonstration," Quarterly Progress Report, Research and Development Activities: Fixation of Radioactive Residues, February, March, and April, 1969, BNWL-1074, pp. 9-16. Battelle-Northwest, Richland, Washington, May 1969.

11. P. C. Owzarski and R. C. Arnett. "Mathematical Model of Ruthenium Scrubbing," Quarterly Progress Report, Research and Development Activities: Fixation of Radioactive Residues, November, December, 1968 and January 1969, BNWL-1003, pp. 22-23. Battelle-Northwest, Richland, Washington, February 1969.

12. K. J. Schneider and V. P. Kelly. Waste Solidification Program, Volume 2, Design Features of the Waste Solidification Engineering Prototypes, BNWL-986. Battelle-Northwest, Richland, Washington, February 1969.

6.0 FILLED RECEIVER POT PERFORMANCE

Evaluation of the solidified waste product and the storage container for interim and long-term storage constitutes an important part of the waste solidification program. The basic criterion for storage is that radionuclides do not enter the human environment beyond safe limits. As part of the WSEP program, the Solids Storage Engineering Test Facility (SSETF) was constructed for storing, monitoring, observing, and evaluating the products in several types of controlled environments.[1] The initial and near-term behavior of the solidified wastes in their containers are being observed and evaluated in the product evaluation program and in the SSETF. Inasmuch as filled pots may be held in an interim storage facility until conditions (e.g., heat generation rate) are suitable for transferring them to a final storage site, it is very important to know what behavior to expect during the interim period.

The important characteristics of the solidified waste which are being measured are thermal conductivity, leachability in water, dispersibility, and crystallinity.

6.1 EVALUATIONS

Most of the receiver pot performance characteristics of interest in the waste solidification program are concerned with changes which are expected to occur slowly, if at all. In fact, the extent of improved safety resulting from waste solidification hinges to a large extent on the absence of notable effects. To detect changes, the original conditions of the solidified waste must be determined.[2] Most of this section deals with the current progress and problems encountered to date in determining the original conditions of the spray solidified waste product from the six radioactive runs.

6.1.1 Maximum Temperatures

The temperatures produced in the receiver pot by the heat-generating radionuclides in the solidified waste are theoretically predictable from knowledge of the waste, its source and age. A major objective of **WSEP** demonstration runs is to determine the predictability of temperatures and the quantity of radionuclides required to produce various temperatures in a pot. The accuracy of predicting temperatures produced by radionuclide decay depends largely on the accuracy of the knowledge of properties such as thermal conductivity. If these properties are known, the general capability to process a waste by the spray solidification process can be judged.

The temperature at the centerline of a heat-generating cylinder is given by:

$$T_c = T_w + \frac{Q}{4\pi KL} \qquad (1)$$

where T_c = temperature at the centerline of a solid cylinder of heat generating material, °C.

T_w = temperature at the cylinder, wall, °C.

Q = heat generation rate (watts) in the cylinder; (radionuclides are assumed to be uniformly distributed).

L = length of heat generating cylinder, (meters).

K = thermal conductivity, $W/(m^2)(°C/m)$.

Equation (1) applies for heat flow perpendicular to the cylinder axis, as would be the case in cylinders with insulated ends or in infinitely long cylinders. Thermal conductivity is assumed to be constant. The equation can be used to estimate maximum internal temperature in pots of solidified waste, if an "effective thermal conductivity" is used as explained below, even though the conditions required by the equation are not met exactly.

Equation (1) may be arranged to give:

$$\Delta T = \frac{Q}{4\pi K_e L} \qquad (2)$$

where $\Delta T = T_c - T_w$ (T_c is the maximum internal temperature and T_w is the wall temperature in the same zone.)

K_e = effective thermal conductivity.

Equation (2) shows that the temperature drop from the centerline to the wall of the pot is a function of the total internal heat generation rate from radionuclide decay. In Equation (2), Q is equal to $\left(\frac{\pi d^2 L}{4}\right)\left(q\right)$, where d is diameter (meters) and q is the heat generation rate density (W/m^3) in the solid. For a given internal heat generation rate, thermal conductivity and fill height, the temperature difference (ΔT) is the same for an 8-inch and a 12-inch diameter pot. However, since Q is a function of d^2, the allowable heat rate density (W/m^3) for an 8-inch diameter pot is approximately twice that for a 12-inch pot.

The "thermal maximum" is the maximum quantity of radioactive decay heat per unit volume of solidified waste which can safely be stored in a waste pot as discussed below. Equation (2) can be used to estimate the conditions for the thermal maximum for a solidified waste container for a given, value of the effective thermal conductivity (K_e), and for given temperature constraints. In WSEP, the temperature constraints used to define the thermal maximum conditions were arbitrarily selected from corrosion or safety considerations.[3]

- A maximum centerline temperature of 900 °C with the pot stored in ambient air at 38 °C or in water at 100 °C.
- A maximum wall temperature of 427 °C with the pot stored in air.

- For solid wastes with a melting point or remelt temperature below 900 °C, the molten core is restricted to less than one-half the pot radius.

Graphical solutions to Equation (2) for several different values of K_e are presented in Figure 6.1. Pot wall temperatures are shown in Figure 6.2 for 8-inch and 12-inch diameter pots cooled by natural convection and radiation in 38 °C (100 °F) air. These curves were derived from standard methods for convective and radiative heat transfer as given by McAdams.[4]

Using a trial and error technique, Figures 6.1 and 6.2 can be used to predict temperatures in a pot for given values of K_e.

6.1.2 Experimental Data

The nominal remelt temperature for the PW-1 spray solidified waste is about 900 °C, and for the PW-2 spray solidified waste is about 700 °C.[5] Consequently, for the WSEP waste pots, the molten core limit must be considered only for the PW-2 spray solidified wastes.

Experimental results from filled pot data for the first six WSEP spray solidification runs are shown in Figures 6.1 and 6.2. The total heat generation rate (Q) for each pot was measured by pot calorimetry and normalized to an exact 6-foot height of solid waste in each pot. The accuracy of the measured Q is ±10 percent.[6]

The AT and T_w values shown in Figures 6.1 and 6.2, respectively, for the six pots were obtained at steady-state with the filled pot in the air-cooled furnace and the filled pots of Runs SS-5 and SS-6 hanging in ambient air. The average AT and T_w values generally varied less than 10 percent along the length of the filled pot (see Tables 9.5 and 9.6).

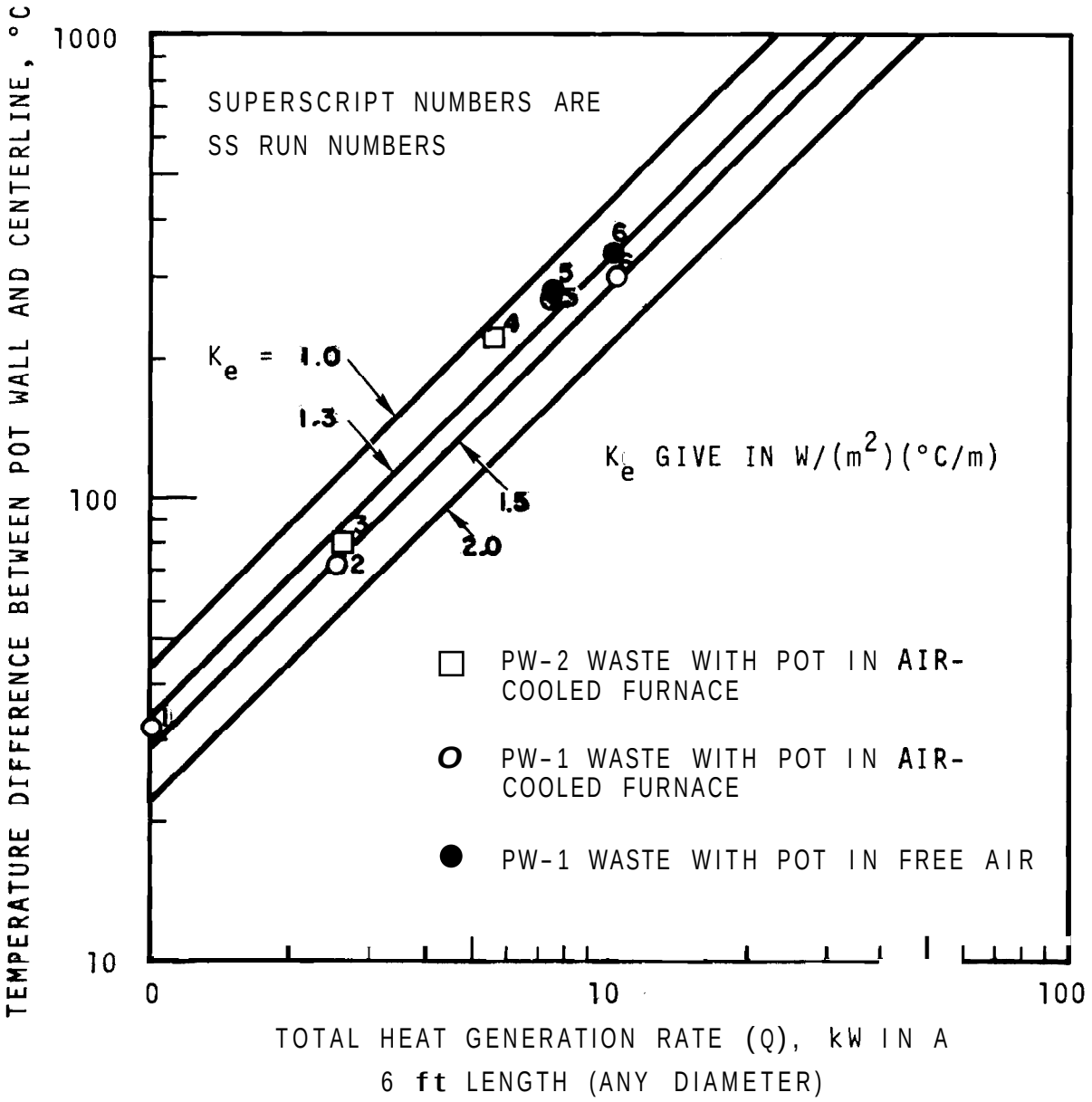

FIGURE 6.1. Temperature Drop (Centerline to Outside Wall) in Receiver Pots Containing Spray Solidified Waste

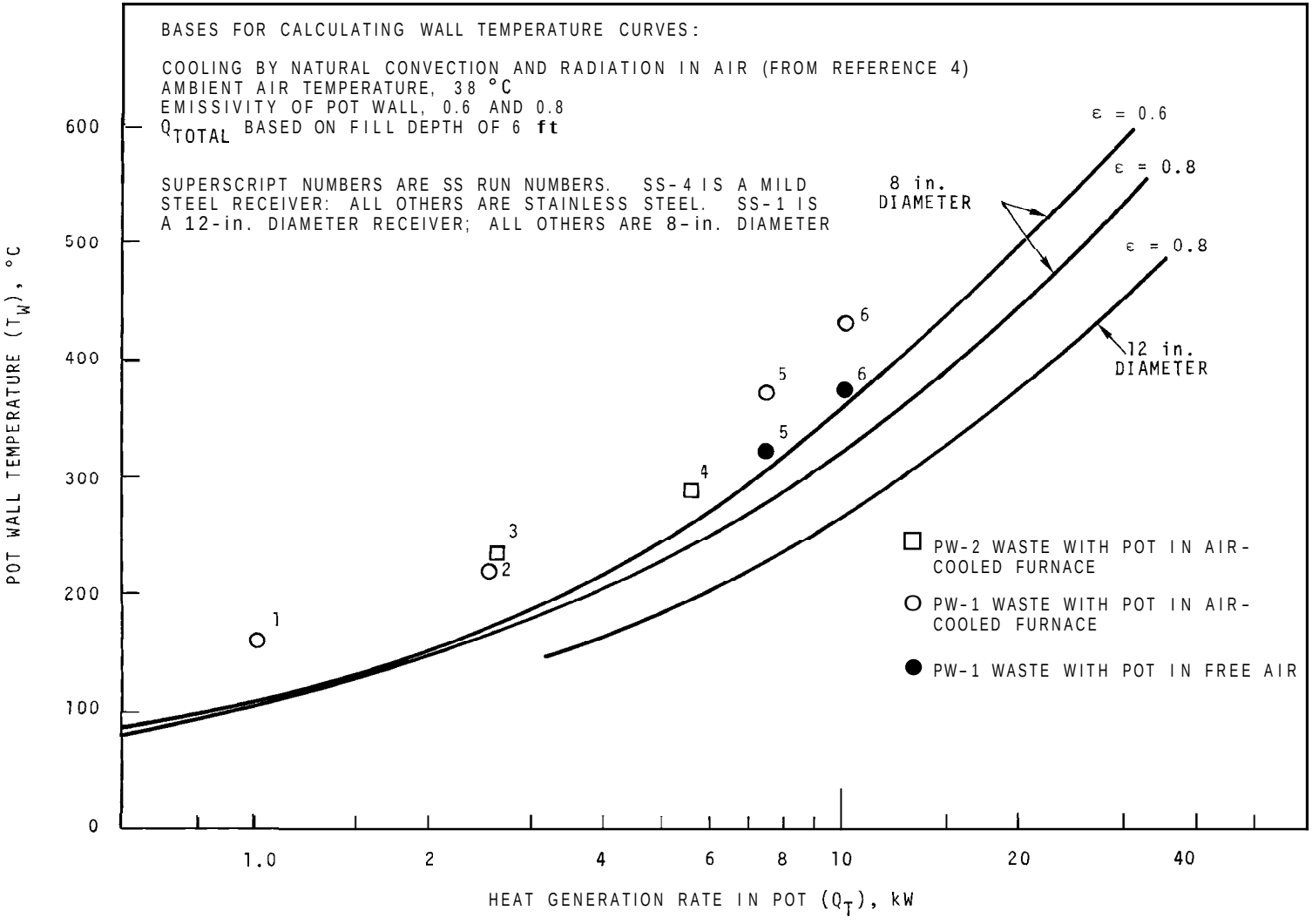

FIGURE 6.2. Pot Wall Temperatures in Air and in Air-Cooled Receiver Pot Furnace

The thermal conductivity for spray-solidified waste derived from the experimental data is essentially the true effective value for the central zones in the pot where heat flow is virtually radial. Earlier nonradioactive experiments have shown that spray solidification produces a solid which normally fills the pot uniformly and homogeneously.[5] This and the generally constant radial temperature difference along the length of each pot from the first six radioactive demonstrations indicate that the heat generation in the solid waste is essentially uniform at the time the pot is filled.

The effects of long-term storage and high temperatures (i.e., at or above thermal maximum conditions) on the stability of the waste products for these runs have not been fully evaluated. However, in the absence of such effects, the experimental results shown in Figure 6.1 for Runs SS-4, 5 and 6, provide a reasonably accurate basis from which to calculate effective thermal conductivities for the PW-1 and PW-2 spray solidified waste products. The value of K_e for these wastes will range from 1.1 to 1.4 $W/(m^2)(°C/m)$ [0.64 to 0.81 $Btu/(hr)(ft^2)(°F/ft)$]. The value of K_e does not depend on the temperature of the solidified waste. A regression analysis of the K_e data for the filled waste pots from the first six runs showed K_e is independent of the "average" waste temperature (arithmetic average of the pot centerline and the pot wall temperature) over the range from 100 °C to 600 °C.[6]

6.1.3. Thermal Maximum

In Figure 6.3, the relationship between K_e and the heat generation rate for a pot centerline temperature of 900 °C is plotted for pots stored in ambient air and for pots stored in water. For example, with the pot stored in ambient air, a 12-inch diameter pot containing 6 feet of PW-1 spray solidified waste could contain approximately 16 kilowatts with a centerline

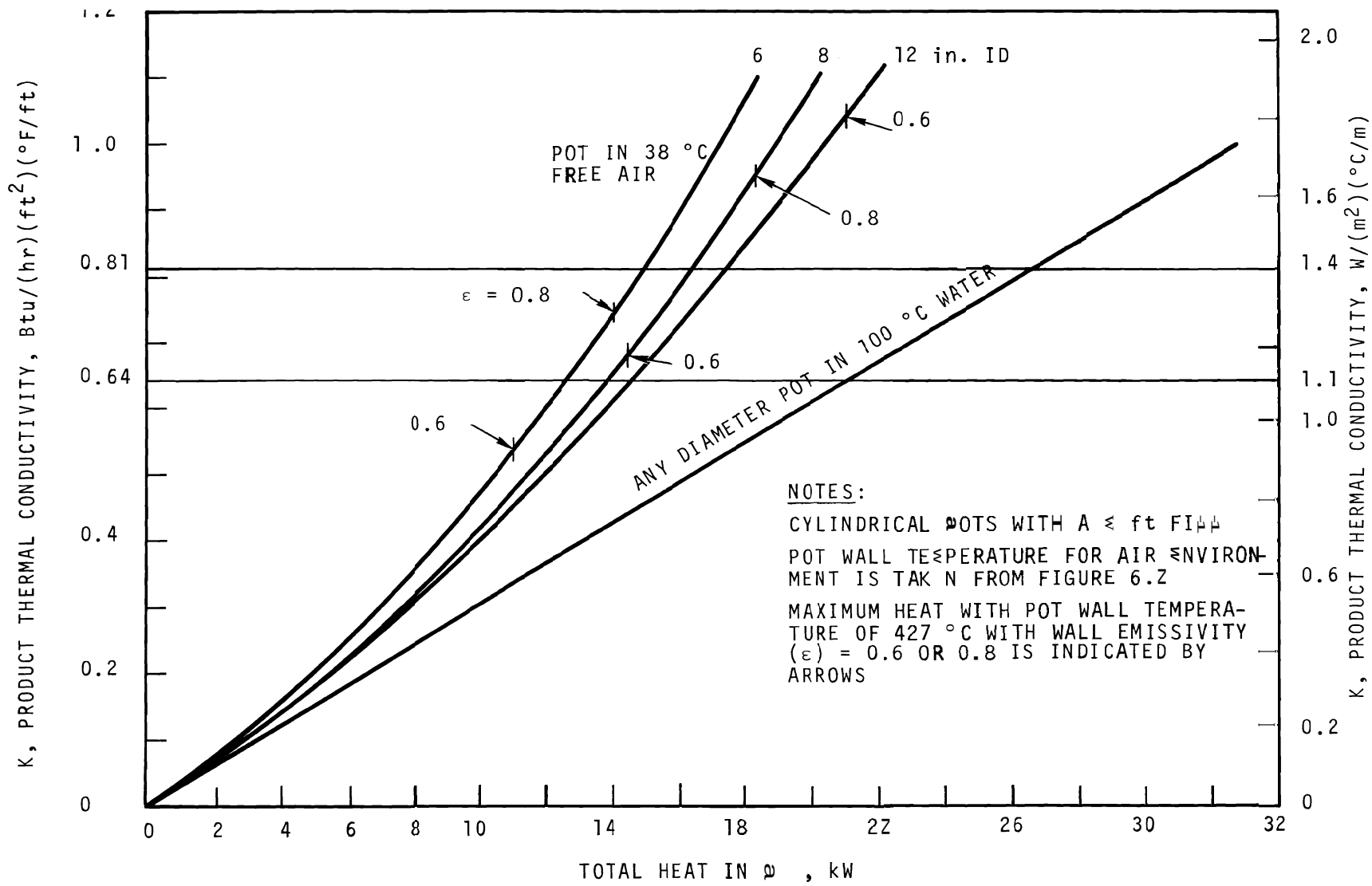

FIGURE 6.3. Heat Required in a Cylindrical Pot to Attain a 900 °C Centerline Temperature

temperature of 900 °C and a wall temperature below 427 °C. If water storage is used, the same volume and geometry of PW-1 spray solidified waste could contain a heat generation rate of about 25 kilowatts (based on water at 100 °C and the pot centerline at 900 °C). It should be possible to fill and safely handle thermal maximum pots intended for water storage in a plant, provided the plant is designed to ensure water cooling of the pot during filling, pot transfers, and interim storage. Filling pots while they are immersed in water is not considered a major problem.

The pot wall temperature limit of 427 °C for pot wall emissivities of 0.6 and 0.8 were superimposed on the curves for air storage in Figure 6.3. For the range of K_e in the PW-1 spray solidified waste, a centerline temperature of 900 °C is reached in the 12-inch diameter pots before a wall temperature of 427 °C is obtained. However, as shown in Figure 6.3, the wall temperature limit for the 6-inch and the 8-inch diameter pots may be reached first. In this case, therefore, the wall temperature limit may control the thermal maximum, depending on the pot wall emissivity. The centerline temperature, rather than the wall temperature, is always the limiting temperature for pots stored in water.

Figure 6.3 shows the value of preoxidizing the walls of a steel pot receiver to increase the wall emissivity. The centerline temperature limit controls the maximum heat generation rate for an 8-inch diameter pot with a pot wall emissivity of 0.8 and for the range of K_e for these wastes. When the pot wall emissivity is below approximately 0.6, the wall temperature limit will control the maximum heat generation rate in the 8-inch diameter pot.

The first six spray solidification demonstrations used five 304-L stainless steel pots and one mild steel pot (Run SS-4). Each pot was exposed to furnace temperatures from 300 °C to 850 °C for 50 to 100 hours during the runs, but none of the pots was intentionally oxidized prior to the runs. Experience with other stainless steel pots in WSEP indicate that pot wall emissivities of 0.8 can be attained by exposing the pots to a 900 °C temperature for about 10 to 20 hours. The data in Figure 6.2 suggests that the 304-L stainless steel pots used in Runs SS-5 and SS-6 were not fully oxidized. While the heat transfer relationships for a pot stored in an air-cooled furnace were too complex to evaluate, the wall temperature for the pot of Run SS-4 lies below the general curve for these data points in Figure 6.2. This could be explained by a greater degree of oxidation (and correspondingly higher wall emissivity) for mild steel than for stainless steel.

Table 6.1 gives the thermal maximum values for waste pots containing spray solidified PW-1 waste for a nominal K_e = 1.3 W/(m^2)(°C/m). The thermal maximum values for waste pots containing spray solidified PW-2 waste are given in Table 6.2.

6.1.4. Thermal Maximum with a Molten Core

Thermal maximum pots with a molten core can be filled and safely handled in a plant that is designed to ensure cooling of the pot during filling, pot transfers, and interim storage. The amount of heat generating fission products that can be safely handled in a pot depends on product thermal conductivity, product melting or remelt temperature, melt corrosiveness, pot geometry and pot environment during filling and interim storage.

TABLE 6.1. Thermal Maximum Heat Generation Rates for Receiver Pots Containing PW-1 Spray Solidified Waste

Receiver Pot Diameter, in.[b]	Thermal Maximum Heat Generation Rate, kW[a]		
	Air Storage[c]		
	Pot Wall Emissivity, ϵ = 0.6	Pot Wall Emissivity,[e] ϵ = 0.8	Water Storage[c]
6	(11)[d]	(14)	.24
8	(14)	15	24
12	16	16	24

a. An effective thermal conductivity, K_e, of 1.3 $W/(m^2)(°C/m)$ or 0.75 $Btu/(hr)(ft^2)(°F/ft)$ is used.
b. Steel receiver pots with a fill depth of 6 feet are used with waste volumes of 30, 60, and 120 liters for 6, 8, and 12-inch diameter receiver pots, respectively.
c. Storage environment used is either free air at 38 °C or water at 100 °C
d. Values in parentheses are for a pot wall temperature of 427 °C (800 °F) and a pot centerline temperature below 900 °C. All other values are for a pot centerline temperature of 900 °C and a pot wall temperature below 427 °C.
e. Emissivities of 0.8 can be obtained by preoxidizing the pot wall at 900 °C for 10 to 20 hours.

TABLE 6.2. Thermal Maximum Heat Generation Rates for Receiver Pots Containing PW-2 Spray Solidified Waste

Receiver Pot Diameter, in.[a]	Waste Form in Pot[b]	Thermal Maximum Heat Generation Rate, kW	
		Storage in Free Air at 38 °C[c]	Storage in Water at 100 °C[c]
6	S	9.0	16 (0.6)[d]
	MC	10	19 (0.4)
8	S	10	16 (1.3)
	MC	12	21 (0.7)
12	S	11	16 (2.0)
	MC	13	19 (1.4)

a. Steel receiver pots with a fill depth of 6 feet are used with waste volumes of 30, 60, and 120 liters for 6, 8 and 12-inch diameter receiver pots, respectively.
b. S = solid with 700 °C centerline temperature; MC = molten core with molten waste-frozen waste interface at 700 °C, and frozen wall thickness of one-half the pot radius.
c. Effective thermal conductivity, K_e, of 1.15 $W/(m^2)(°C/m)$ or 0.665 $Btu/(hr)(ft^2)(°F/ft)$ is used with a pot wall emissivity, ϵ, of 0.8 for well-oxidized steel surfaces in air.
d. Values in parentheses are estimated frozen wall thicknesses (inches) with the loss of water cooling but with the natural convective cooling available in free air at 38 °C.

Product stability and fission product migration are indirect factors which must also be considered in the evaluation of the spray solidified waste products. This is particularly true for the sulfate-containing PW-2 waste, because sulfate can volatilize when held at high temperatures.[7] Laboratory studies with simulated PW-2 spray solidified waste stored for 120 days at 700 to 800 °C indicate that sulfate volatilization will not pressurize a closed waste container but will produce a segregated waste product with the sulfate concentrated in the upper phase.[8] The preliminary laboratory data indicate that if melt segregation presents undesirable problems, such wastes should not be held for extended time periods at temperatures exceeding about 550 °C.[8] More will be learned about the characteristics of the PW-2 spray solidified waste from the long-term product storage tests which are in progress.

For the PW-2 spray solidified waste, the nominal remelt temperature of 700 °C means that a pot receiver may contain a waste which is partially molten without exceeding a WSEP pot temperature constraint. Equations have been derived for calculating frozen wall thicknesses in pots with molten cores.[8,9,10] For cylindrical containers filled to a depth of 6 feet, Figure 6.3 shows the heat generation rate required at various product thermal conductivities in order for the pot centerline to reach 900 °C with no considerations for molten cores. Figure 6.4 gives the product frozen wall thickness as a function of remelt temperature for an 8-inch diameter pot containing waste with a heat rate content giving a 900 °C centerline temperature with water cooling.

The effective thermal conductivity of the molten waste is assumed to be the same as that for the nonmolten (frozen) waste. Thus, as shown in Figure 6.4. , with the pot stored in water a waste with a remelt temperature below 900 °C would have a centerline temperature of 900 °C.

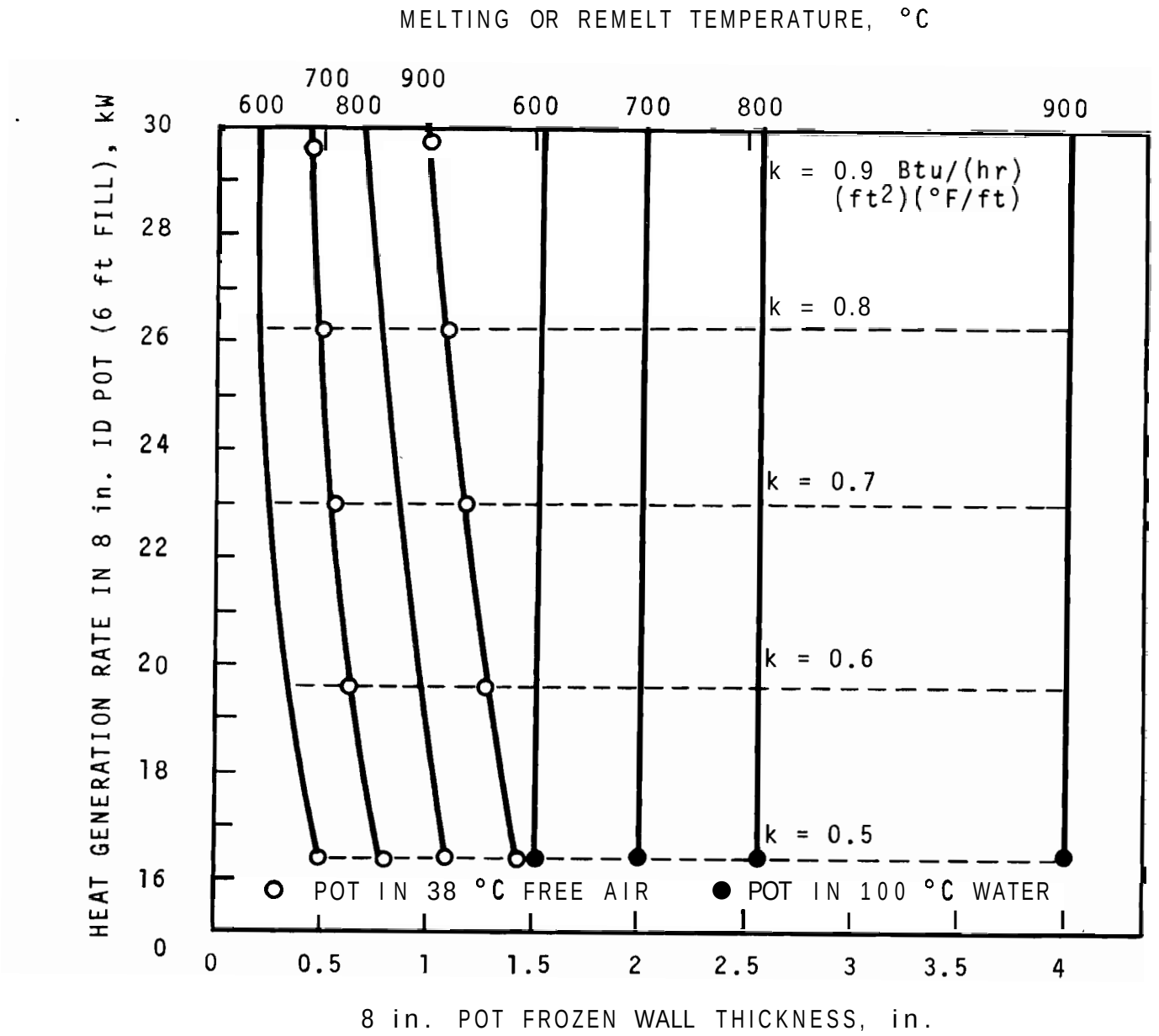

FIGURE 6.4. Product Frozen Wall Thickness for 8-Inch Thermal Maximum Pots (Receiver Pots Filled to Obtain a Hypothetical 900 °C Centerline When Stored in Water)

Figure 6.3 illustrates that for PW-2 spray-solidified waste with a nominal thermal conductivity of 1.15 $W/(m^2)(°C/m)$ [0.665 $Btu/(hr)(ft^2)(°F/ft)$], the thermal maximum heat generation rate for an 8-inch diameter pot stored in water is 21 kilowatts.

Figure 6.4 shows that for a remelt temperature of 700 °C, the frozen wall thickness for a 900 °C centerline thermal maximum pot is 2.0 inches. If the pot lost cooling water but had the benefit of natural convection air cooling, the frozen wall thickness would decrease to about 0.7 inches. The wall temperature (Figure 6.2) would increase to 460 °C, and the centerline temperature would increase to 1250 °C, assuming no change in thermal conductivity. Obviously, the latter situation may give some cause for concern, and knowledge about the corrosiveness of the melt and the integrity of the frozen wall would be essential. Since the integrity of the frozen wall has not been fully evaluated, the minimum frozen wall thickness in WSEP has been limited to not less than one half the radius of the receiver.

Table 6.2 summarizes the thermal maximum heat generation rates for pots containing PW-2 spray solidified waste for both nonmolten and molten core conditions. The nonmolten conditions are included because of the uncertainty of the stability of the PW-2 spray solidified waste product for molten core conditions. Pending the results of the long-term product storage tests in progress, a centerline temperature of 700 °C has been selected as maximum for WSEP spray solidification pots with the PW-2 waste flowsheet.

Table 6.1 summarizes the thermal maximum heat generation rates for pots containing PW-1 spray solidified waste for nonmolten conditions. These rates are given for nonmolten conditions for this waste because the nominal remelt temperature

of 900 °C corresponds to the WSEP temperature limit. As determined from Figure 6.4, if a pot containing PW-1 waste with a 900 °C centerline temperature and stored in water at 100 °C were to lose cooling water but had the benefit of free air cooling, the resulting frozen wall thickness would be about 1.2 inches. The pot wall temperature would reach about 480 °C, and a hypothetical pot centerline temperature of about 1280 °C would be attained (assuming a constant K_e for molten and nonmolten waste).

Thermal maximum heat generation rate limits other than those imposed for the WSEP program could be discussed here, but in the final analysis each particular case will have to be evaluated according to its own characteristics including the properties and geometry of the solidified waste, the waste containers and the processing environment.

6.1.5 Radiation and Temperature Profiles

To get some idea of the solids deposition pattern, gross gamma radiation profile scans were made on each of the filled pots. Figure 6.5 shows the results of two scans. Gamma radiation profiles were obtained simply by positioning an ionization chamber about 6 inches from the pot and recording the radiation level at several points along the length of the pot. No collimation was attempted. Figure 6.5 also shows the pot centerline temperature profiles. As might be expected, the temperature and radiation profiles are quite similar. These profiles indicate that uniform distribution of fission products probably exists, but the radiation measurements cannot be interpreted quantitatively.

A gamma spectrometer and multichannel analyzer system was designed and installed to measure gamma energy spectrum profiles of the filled pots. An indication was sought of

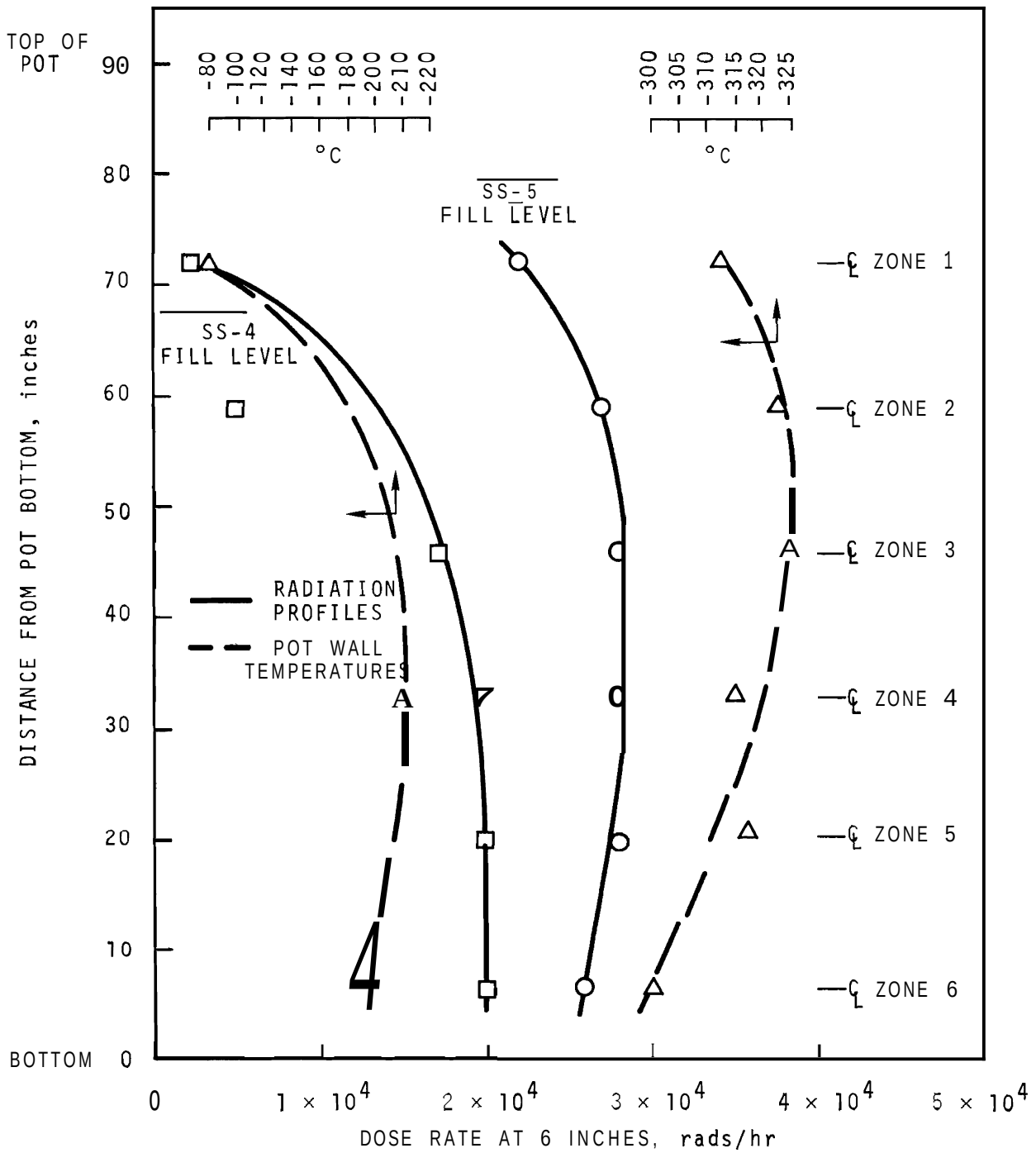

FIGURE 6.5. Radiation and Temperature Profiles of **Receiver** Pots Filled with Spray Solidified Waste Product

the distribution of heat generating isotopes in the pot. However, the system has not provided satisfactory measurements. The two major problems were:

- The sodium iodide crystal became saturated in the high radiation field when a 0.094-inch diameter collimation tube was used.
- Energy channels were not discernible due to distortion of the gamma energy spectrum by Compton scattering,

6.1.6 Calorimetry

The total heat generation rate from a filled pot is measured in a calorimeter. The calorimeter is a water-filled, insulated cylinder equipped with a cooling coil.[1,11] The total heat rate from the pot is determined within ±10% from the temperature rise of the cooling coil water at steady-state conditions at each of several cooling water flow rates. The measured heat generation rate from a receiver pot generally agrees within 10% with values calculated from feed analyses and the volume of feed processed. The heat generation rates in the pot receivers for the first six spray solidification demonstrations are given in Table 9.2 in the Appendix.

6.1.7 Dimensions

Before a pot was filled, it was tested and measured to ensure its integrity and to establish a basis for detecting changes which might occur during filling. Gross length and diameter of each pot was measured. As soon as possible after the pot was filled, the pot diameter was measured at 3 locations to see if any gross swelling or pot deformation had occurred. The measurements were confirmed by visual observations. No significant changes were detected in external pot dimensions of any of the six pots within the accuracy of the

remote in-cell measurements. These measurements were within ±0.25 inch for the pots of Runs SS-1 and SS-2 and within ±0.025 inch for the pots of Runs SS-3 through SS-6.

6.1.8 Density

Table 6.3 gives the weight, volume, and bulk density of the solid waste produced in each run. The laboratory density given in Table 6.3 was determined at the laboratory for a grab sample taken as the waste product flowed out of the melter.

The receiver pot weight is measured in the cell with a dynamometer before and after filling the pot. The net weight of solidified waste obtained from these measurements is probably accurate within 10 percent. The net weight and volume of solidified waste in the pot receiver was used to calculate the bulk density of the waste.

6.1.9 Leach Rates

Leach rates in water at about 25 °C were measured for grab samples of the solid waste products from Runs SS-2, 4, 5, and 6.

After 8 weeks, the leach rate based on ^{137}Cs was about 10^{-3} g/(cm^2) (day) for the PW-2 waste and about 10^{-5} g/(cm^2) (day) for the PW-1 waste. The leach rate based on ^{144}Ce was about 10^{-6} g/(cm^2) (day) for the PW-2 waste and about 10^{-7} g/(cm^2) (day) for the PW-1 waste.

The leach rates for the PW-1 waste continued to decrease with time and the leach rates (based on ^{137}Cs and ^{144}Ce) after 32 weeks were about 10 times less than the rates after 8 weeks. The leach rates for the PW-2 waste leveled off after about 8 weeks and remained at a nearly constant rate. After 32 weeks, about 60 percent of the ^{137}Cs had been leached from the PW-2 waste sample from Run SS-4. Figure 6.6 shows leach rates and "fraction leached" based on ^{137}Cs for the PW-2 waste sample

TABLE 6.3. Receiver Pot Fill Data

WSEP Run No.	Waste Type	Pot Diameter, in.	Pot Material	Rodded[a] Volume of Product, liters	In-Cell Weights[d] Gross (Pot and Waste), kg	Tare (Pot Only), kg	Net (Waste Product), kg	Product Density Bulk Density (In-cell), kg/liter	Lab Density (Grab Sample) kg/liter
SS-1	PW-1	12	304L	55[e]	397	204	193[e]	3.1	3.1
SS-2	PW-1	8	304L	48	318[c]	168[c]	150	3.1	3.2
SS-3	PW-2	8	304L	29[b]	200	118	82	2.8[b]	2.7
SS-4	PW-2	8	Mild Steel	56	278	118	160	2.8	2.8
SS-5	PW-1	8	304L	66	358	127	231	3.5[f]	3.3
SS-6	PW-1	8	304L	65	326	118	208	3.2	3.2

a. Calculated by using the measured distance from the top of the pot to the surface of the waste product and assuming 10 liters of waste per foot in 8-inch diameter pots and 20 liter/ft in 12-inch diameter pots.
b. Best estimate based on material balance data. Pot was not rodded.
c. Includes weight of special pot clamp.
d. All weights measured by hanging receiver pot on a dynamometer.
e. Includes about 38 liters (120 kg) of radioactive waste product, about 4 liters (13 kg) of nonradioactive PW-1 solidified waste, and about 13 liters (59 kg) of radioactive cell waste (metallic and ceramic) stored in product receiver prior to run.
f. High value attributed to error in weight of receiver pot.

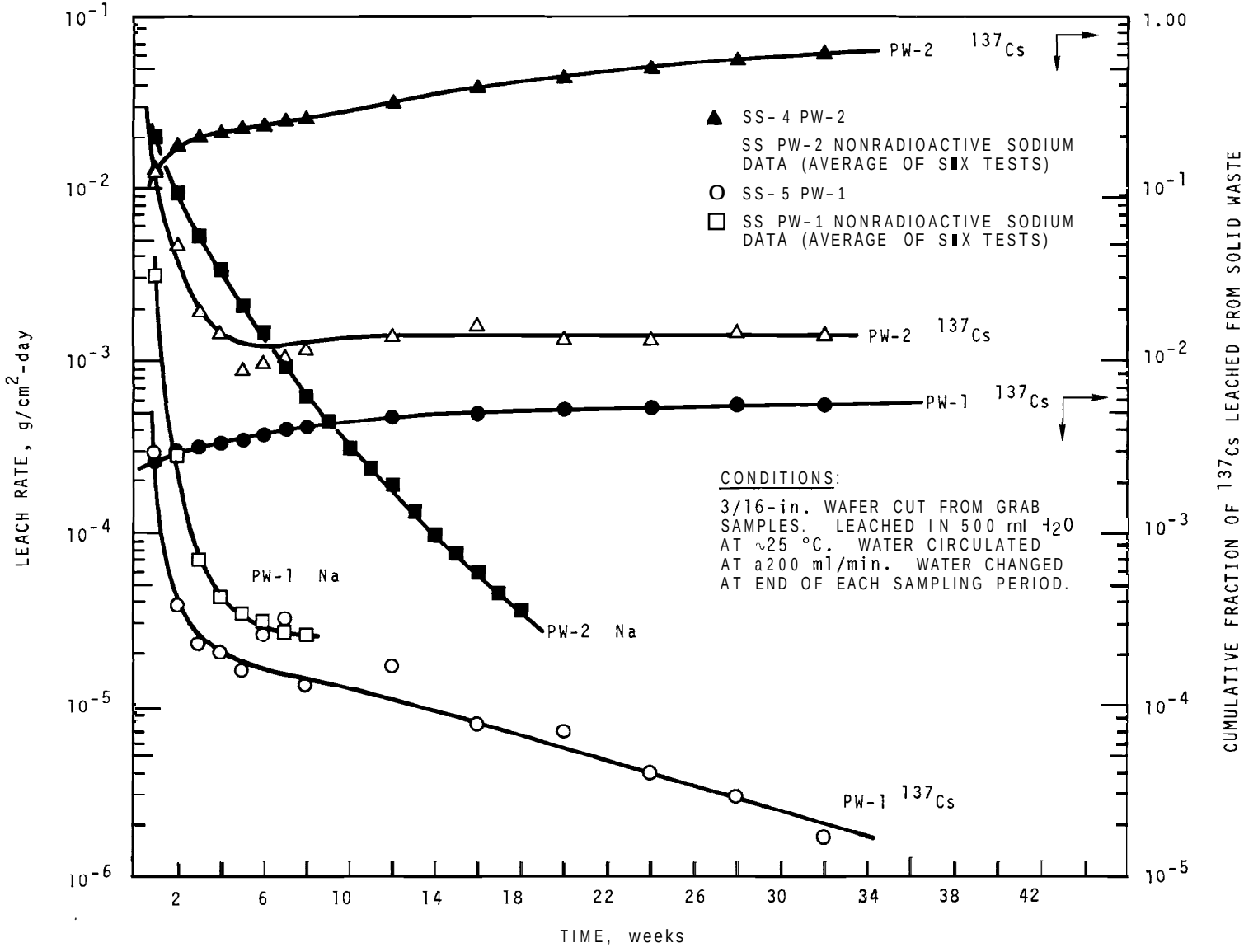

FIGURE 6.6. ^{137}Cs Leach Rates for Radioactive PW-1 and PW-2 Spray Solidified Waste

from Run SS-4 and the PW-1 waste sample from Run SS-5. Leach rates and fraction leached based on ^{144}Ce are shown in Figure 6.7 for these waste samples. The ^{137}Cs leach rates for the PW-1 waste were in general agreement with the sodium leach rates measured for simulated (nonradioactive) PW-1 waste samples (see Figure 6.6). The ^{137}Cs leach rates for the PW-2 waste were in agreement with the sodium leach rates for simulated PW-2 waste for the first 8 weeks, but thereafter the sodium leach rates continued to decrease without the leveling trend shown in Figure 6.6 for the radioactive waste. The reason for the continually decreasing leach rates for the simulated PW-2 waste is not known but may be due to the different temperature conditions during formation of the leach test specimens. The simulated PW-2 waste sample was rapidly cooled (air quenched) during formation, while the radioactive PW-2 waste sample was cut from a larger sample which had cooled more slowly.

Figure 6.8 shows the leach test apparatus and details of the leach test sample. The leach rates are based on a solid waste analysis calculated from the feed composition. The concentration of ^{137}Cs and ^{144}Ce calculated to be in the waste was usually about 1.2 times that found by actual analysis of the aqueous solutions of dissolved waste samples.

6.1.10 Leak Test

A filled receiver pot is tested for leaks using a standard helium leak test procedure.[1] The pot leakage rate for the pots from Runs SS-4 and 6 (the only pots measured) were 5.1×10^{-8} and 2.5×10^{-7} atm - cm^3/sec, respectively. The pots from Run SS-1, 2, 3, and 5 will be leak tested in the near future.

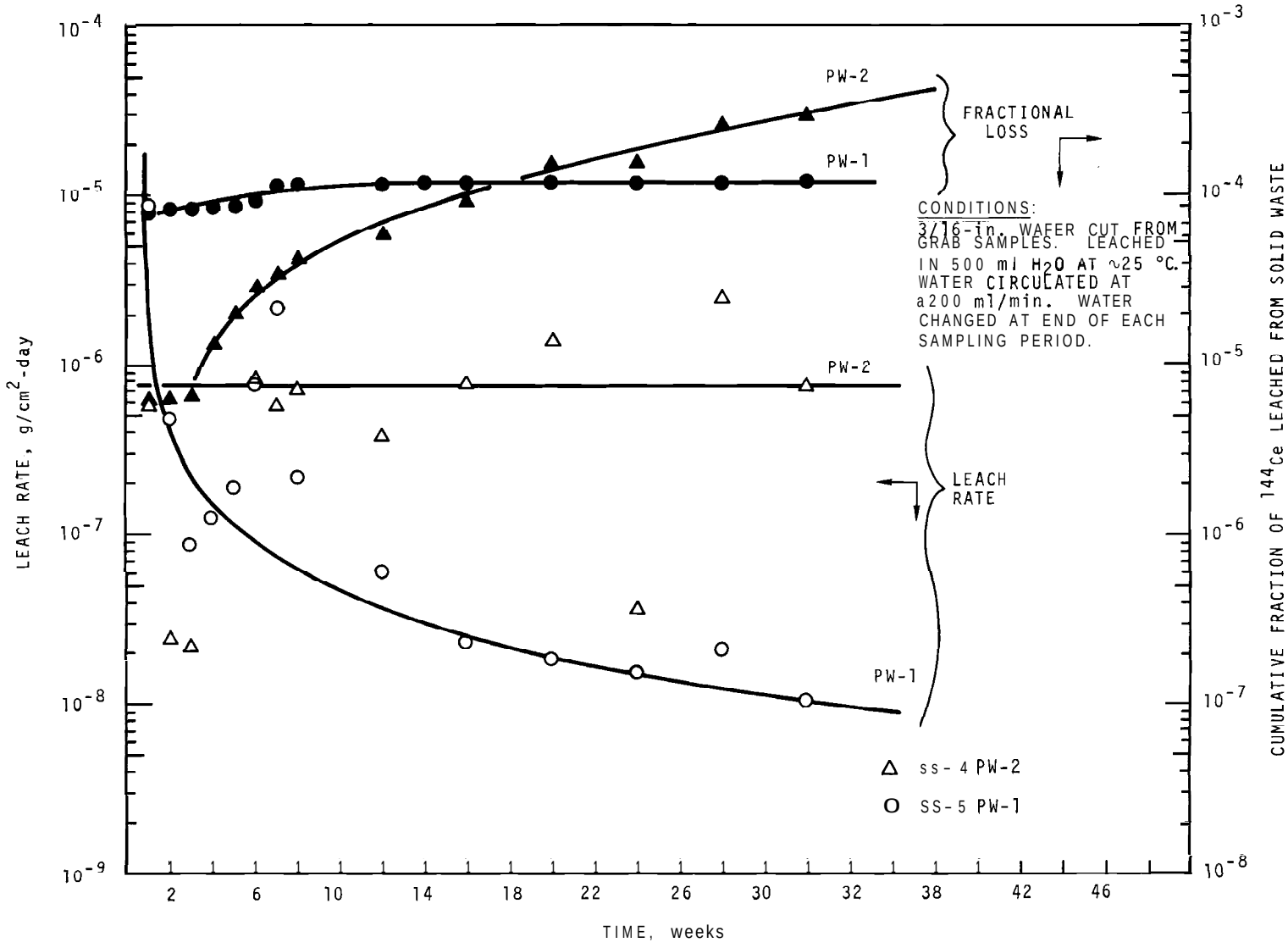

FIGURE 6.7. ^{144}Ce Leach Rates for Radioactive PW-1 and PW-2 Spray Solidified Waste

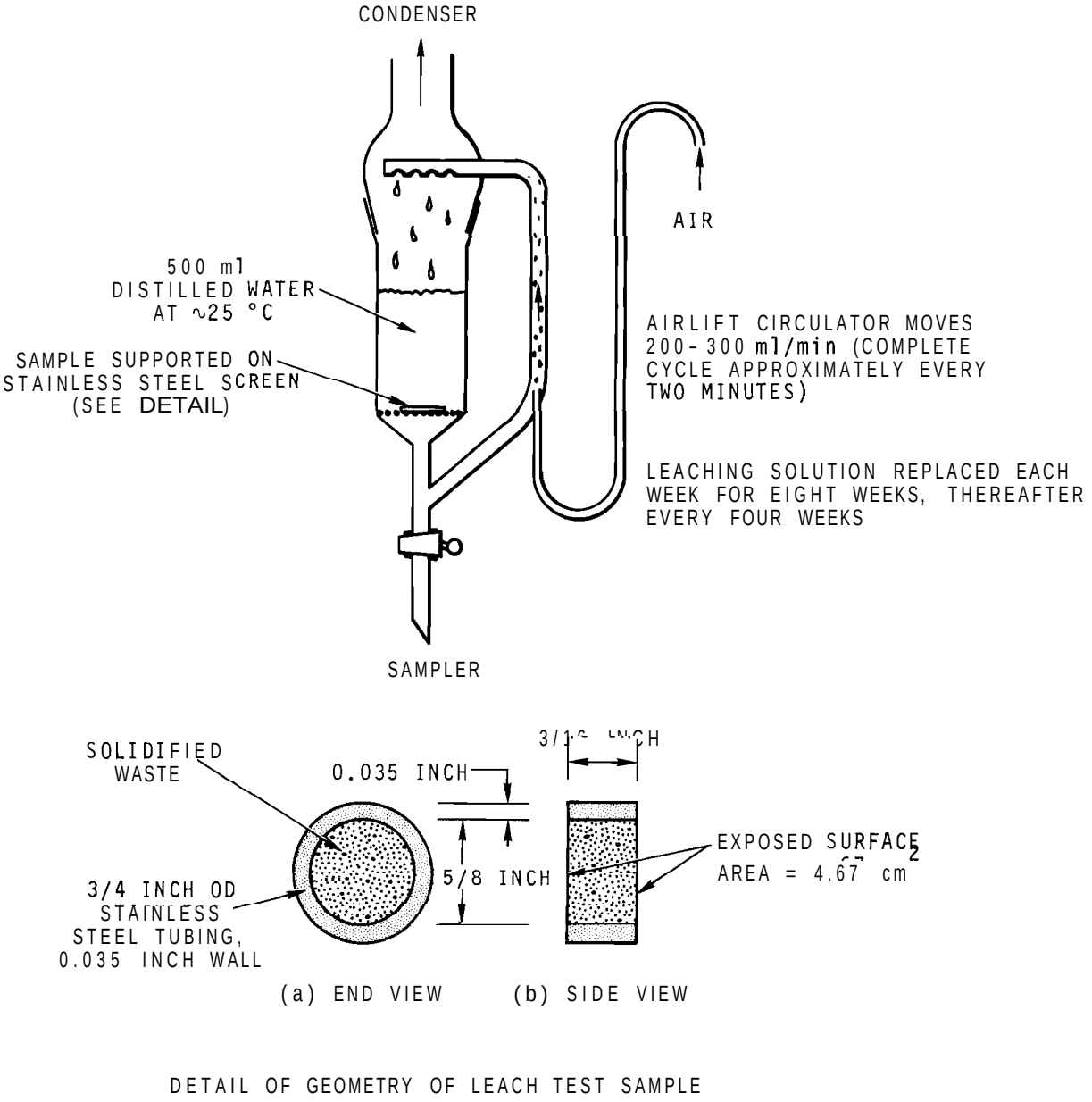

FIGURE 6.8. Leach Test Equipment for Solidified Waste Samples

6.1.11 Pressure

Bourdon tube pressure gages were installed on filled pots as soon as the pots were sealed. The purpose of the gages was to provide a means for routinely monitoring the presence of residual volatile materials in the waste. However, the gages used have not been mechanically rugged enough for in-cell work. As the filled pots were transferred from one storage position to another and the gages were jarred and vibrated, the pressure vacuum readings changed. Consequently, no reliable internal pot pressure data is available at this time. The pressure data given in Table 6.4 only indicates the presence of either a vacuum or a pressure in each pot.

6.1.12 Pot Corrosion

An ultrasonic wall thickness scanner was installed in the cell to detect variations in the wall of a receiver pot caused by corrosion internally (by waste product) and externally (by air and/or water).[1,11] Reliable measurements have not yet been obtained because of difficulty in maintaining proper alignment and contact between the receiver pot wall and the instrument. The use of a direct contact transducer device was unsuccessful because high temperatures of the pot walls (greater than 50 °C) damaged the transducer. Visual inspections of the external surfaces of the pots have not revealed any sign of significant corrosion other than discoloration of the steel pot surfaces due to air oxidation. A workable wall thickness gage is planned to be available in the near future for measuring the thickness of each pot wall. Core drills planned during the long-term product evaluation program in the SSETF will also be used to study the corrosion of pot walls (if any) by the waste product.

TABLE 6.4. Receiver Pot Welding, Leak Test, and Pressure Data

Run No.	Receiver Diameter, in. [a]	Receiver Material, [c]	Time from Fill to Weld, days [d]	Approximate Receiver Pressures [e]: Initial Reading, psig	Time Since Welded, days	Final Reading, psig	Time Since Initial Reading, days	Receiver Pot Leakage, atm-cm^3/sec	Time Since Welded, days
SS-1	12	304L	235	1	190	0	200	NA	-
SS-2	8	304L	90	1	250	2	200	NA	-
SS-3	12,8 [b]	304L	6	NA [f]	NA	NA	NA	NA	-
SS-4	8	Mild Steel	4	3	30	3	510	5.1×10^{-8}	340
SS-5	8	304L	3	1	1	-10	35	NA	-
SS-6	8	304L	7	1	1	-1	20	2.5×10^{-7}	120

a. All pots have the same size opening for pot lids, about 8 inches in diameter.
b. Initial 12-inch diameter pot containing about 10 liters of solidified waste was removed during a run interruption and an 8-inch diameter pot was used for most of Run SS-3.
c. Upper sections of pots and pot lids are 304L stainless steel.
d. All pots were welded remotely at a rate of 4.6 in./min with a welding voltage and current of 12 volts and 180 amps, respectively. All pots were stored in water prior to and after welding until final pressure reading was taken.
e. Pressure readings are useful only to indicate absence of pressurization. The zero point of the Bourdon tube gages were prone to change because of the frequent mechanical vibration which occurred during remote handling of the pot receivers.
f. NA = Not Available. Incomplete pot fill; no jumper prepared for pressure and leak test measurements.

6.2 POT HANDLING, CONTAMINATION CONTROL AND WELDING

Handling of receiver pots filled with spray solidified waste proceeded with little difficulty. The handling system[11] provided for the pot to be contained in a hood (which was vented to the cell through natural openings) during processing and until the pot was capped. This manner of containment was designed to minimize the spread of contamination from an open pot. Experience with the handling and containment system leads to two conclusions:

- Handling of uncapped pots after filling did not result in a noticeable contamination problem in the cell. (However, the cell was badly contaminated from previous process leaks.)
- The press-in pot cap machined to accept a threaded pot plug successfully achieved simplicity in handling at reasonable pot fabrication costs.

Remote welding of the pot cap to the pot was begun by chucking the pot in the turntable and cleaning the pot lip with a damp swab. The pot cap was pressed in place, and the pot plug was then threaded into the center of the pot cap. Next, the pot head runout* was checked by a dial indicator.

The arc-head and torch were then positioned above the pot head. A weld test specimen was placed under the torch, welding parameters were selected and set on the remote console, and a test weld was made to verify system operability. The torch was positioned over the weld joint at an angle of about 30 degrees to vertical, and the automatic weld cycle was started.

---

* "Runout" is the deviation from perfect form of a revolving surface. This is detected with a dial indicator while fully rotating the pot on a datum axis.

Welding arc and weld puddle were continuously monitored through a spotting scope, and minor adjustments were made in torch position, by operator control of the manipulator.

The resulting welds of the pot cap and pot plug were inspected visually for cracks or other flaws and, later, (as previously discussed), a helium leak check was made.

Ten spray solidification pots, eleven phosphate glass pots and six pot calcination pots have been welded remotely.[12,13] Table 6.4 gives a summary of the welding parameters for the first six spray-solidified waste pots. The electrode diameter was 1/8 inch and argon was used at a rate of 20 scfh. All welds were of good quality as determined by visual inspection.

Experience with welding pots can be summarized as follows:

- The raised-step weld joint gave good results. It is still recommended for remote welding of waste pots.
- Viewing of the weld was not one of the major problems in remote welding. A good quality lead-glass window and a spotting scope proved acceptable. Periscopes would be preferred in cases where imperfect or radiation-damaged windows must be used.
- A self-centering jig mounted on top of the pot[11] minimized or eliminated the need for accurate chucking to avoid misalignment. The jig fastens to the pot and maintains positive joint and torch alignment.

REFERENCES FOR SECTION 6

1. V. P. Kelly. Waste Solidification Program, Volume 3, Design Features of the Facilities and Equipment for the WSEP Product Evaluation Program, BNWL-832. Battelle-Northwest, Richland, Washington, December 1968.

2. W. K. Winegardner. Unpublished Data. Battelle-Northwest, Richland, Washington, June 1969. (Waste Solidification Demonstration Program, Product Evaluation--report in progress).

3. M. R. Schwab. "Appendix," Waste Solidification Program, Volume 1, Process Technology-Pot, Spray, and Phosphate Glass Solidification Processes, edited by K. J. Schneider, BNWL-1073. Battelle-Northwest, Richland, Washington, August 1969.

4. W. H. McAdams. Heat Transmission, McGraw-Hill, New York, 1954. 3rd ed., Chapters 4 and 7.

5. J. D. Moore. Waste Solidification Engineering Prototypes, Design Verification Testing of Spray Solidification Equipment, BNWL-1117. Battelle-Northwest, Richland, Washington, July 1969.

6. R. J. Thompson. "Evaluation of Solidified Waste Products," Quarterly Progress Report, Research and Development Fixation of Radioactive Residues, A. G. Blasewitz Editor, BNWL-1311, Battelle-Northwest, Richland, Washington, February 1970.

7. D. W. Brown and J. E. Mendel. "Study of High Temperature Storage of Solidified Waste Products Containing Sulfate," Quarterly Progress Report, Research and Development, Fixation of Radioactive Residues, edited by A. M. Platt, BNWL-1003. Battelle-Northwest, Richland, Washington, February 1969.

8. J. D. Kaser. Estimation of Molten Cores Size in Waste Storage Vessels and Frozen Wall Waste Melters, BNWL-1004. Battelle-Northwest, Richland, Washington, April 1969.

9. W. V. DeMier. "Measurements, Techniques, and Equipment," Quarterly Progress Report, Research and Development Activities, Fixation of Radioactive Residues, April-June 1967. edited by A. M. Platt, BNWL-507. Battelle-Northwest, Richland, Washington, August 1967.

10. J. L. McElroy. "Filling of Pots with Thermal Maximum Heat Content in Water," Quarterly Progress Report, Research and Development, Fixation of Radioactive Residues, edited by A. M. Platt, BNWL-1003. Battelle-Northwest, Richland, Washington, February 1969.

11. K. J. Schneider and V. P. Kelly. Waste Solidification Program, Volume 2, Design Features of the Waste Solidification Engineering Prototypes, BNWL-968. Battelle-Northwest, Richland, Washington, February 1969.

12. J. L. McElroy, C. R. Cooley, W. V. DeMier, J. E. Mendel, J. C. Suddath (ORNL) and J. O. Blomeke (ORNL). Waste Solidification Program, Volume 4, Pot Calcination Performance During First Radioactive Tests in the Waste Solidification Engineering Prototypes, BNWL-814. Battelle-Northwest, Richland, Washington, December 1968.

13. J. L. McElroy, J. N. Hartley, K. J. Schneider and R. F. Drager. Waste Solidification Program, Volume 5, Phosphate Glass Solidification Performance During First Radioactive Tests in the Waste Solidification Engineering Prototypes, BNWL-1185. Battelle-Northwest, Richland, Washington, January 1970.

7.0 PROJECTED FLOWSHEETS FOR PW-1 AND PW-2

While it is desirable for a waste solidification facility to be capable of processing wastes which differ widely in chemical and radiochemical compositions, demonstration of all possible waste variations in the WSEP program is impractical. Experience in fuel reprocessing and projections of future fuel reprocessing requirements led to the selection of the two generalized types of Purex acid wastes (shown previously in Table 3.1) for initial demonstrations.

The initial phase of the program for WSEP demonstrations is based on processing fission product wastes from light water reactor fuels with an integrated exposure of 20,000 MWd/tonne at a specific power of 15 MW/tonne. The resultant amounts of the more significant fission products are given in Table 7.1.[1]

Figure 7.1 shows the time dependence of the fission product heat generation rate of the waste from one metric ton of this fuel. Both the initial heat generation rate levels of the waste and the later aged levels must be considered in filling a waste storage pot. Initially the maximum heat generation rate within any container is limited either by the maximum allowable centerline or wall temperatures (which are 900 °C and 427 °C, respectively, in WSEP, based on corrosion considerations) or by other limits such as the WSEP limit for molten cores. If a molten core exists, the frozen wall thickness should not be less than one-half the pot radius. This is an arbitrarily established limit for WSEP for those waste products with remelt temperatures below 900 °C*.

---

* These limits were selected for the WSEP waste containers and are used here in the absence of established limits to provide a preliminary basis from which to compare waste solidification and waste storage.

TABLE 7.1. Fission Products from a Power Reactor Fuel Exposed to 20,000 MWd/tonne at 15 MW/tonne[a]

Element	Average Atomic Weight	Ci/tonne at 90 days	Ci/tonne at 180 days	g/tonne at 1 yr	Ci/tonne at 1 yr	g/tonne at 6 yr	Ci/tonne at 6 yr	At 6 yr, moles/tonne and moles/liter for 100 gal/tonne: moles/tonne	moles/liter
Rb	86	---	---	230	---	234	---	2.68	0.71×10^{-2}
Cs	134	1.3×10^{5}	1.3×10^{5}	1871	1.2×10^{5}	1755	6.7×10^{4}	13.10	3.45×10^{-2}
Sr	88	1.6×10^{5}	8.0×10^{4}	550	5.0×10^{4}	512	4.1×10^{4}	5.82	1.55×10^{-2}
Ba	138	5.7×10^{5}	---	908	---	1023	---	7.40	1.95×10^{-2}
Y	91	2.3×10^{5}	1.1×10^{5}	287	5.4×10^{4}	287	4.2×10^{4}	3.15	
La	139	6.5×10^{3}	---	766	---	766	---	5.50	
Ce	142	1.0×10^{6} (b)	7.2×10^{5} (b)	1483	4.6×10^{5} (b)	1400	5.6×10^{3} (b)	9.85	
Pr	141	---	---	706	---	706	---	5.0	
Nd	148	1.0×10^{3}	---	2403	---	2475	---	16.70	11.85×10^{-2}
Pm	147	9.8×10^{4}	8.7×10	102	7.5×10^{4}	27	2.0×10^{4}	0.18	
Sm	147	3.9×10^{2}	---	463	---	537	---	3.65	
Eu	153	5.5×10^{3}	4.7×10^{3}	86	---	85	---	0.55	
Gd	156	---	---	26	---	28	---	0.18	
Zr	93	2.2×10^{5}	1.0×10^{5}	2266	1.5×10^{2}	2300	Neg	24.7	6.50×10^{-2}
Nb	95	2.2×10^{5}	2.0×10^{5}	Neg	3.0×10^{2}	Neg	Neg		
Mo	97	---	---	2135	---	2370	---	24.5	6.50×10^{-2}
Tc	99	---	---	523	---	523	---	5.3	1.40×10^{-2}
Ru	103	3.2×10^{5}	1.3×10^{5}	1286	1.2×10^{5}	1252	3.7×10^{3}	12.1	3.20×10^{-2}
Rh	102	1.2×10^{5}	2.3×10^{4}	285	---	285	---	2.8	0.74×10^{-2}
Pd	105	---	---	647	---	680	---	6.5	1.72×10^{-2}
Ag	109	---	---	33	---	33	---	0.3	0.08×10^{-2}
Cd	112	---	---	33	---	33	---	0.3	0.08×10^{-2}
Te	128	2.1×10^{4}	6.2×10^{3}	301	---	300	---	2.4	0.64×10^{-2}
Total Ci/tonne		2.9×10^{5} (c)	1.7×10^{5} (c)		9.7×10^{5} (c)		1.9×10^{5} (c)		

a. Obtained from Computer Program Isogen - a Computer Code for Radioisotope Generation Calculations.[1]
b. Includes ^{144}Ce daughter, ^{144}Pr.
c. Small contributors are not itemized but are included in total. Does not include transuranium and transplutonium elements.

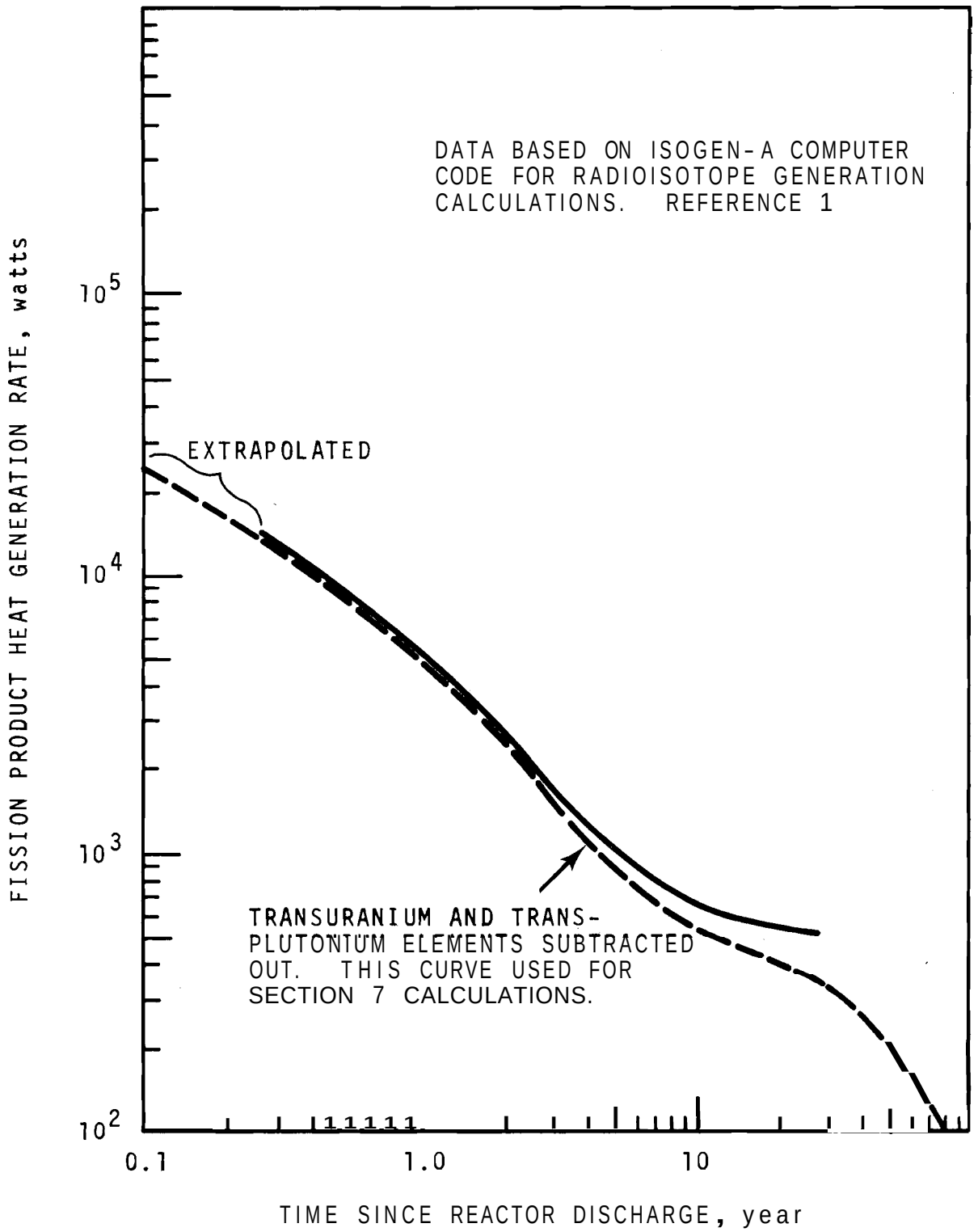

FIGURE 7.1. Fission Product Heat Generation Rate with Time for One Tonne of Reactor Fuel Irradiated to 20,000 MWd/tonne at 15 MW/tonne

Since the PW-1 spray solidified product from PW-1 waste has a nominal melting temperature of 900 °C, the centerline and wall temperature limits were used to determine the maximum heat generation rates shown in Figures 7.2 and 7.3 for the 8-inch and the 12-inch diameter pots used in the WSEP program.[2] Because the PW-2 spray solidified product has a nominal remelt temperature of 700 °C, the molten core limit was used to determine the maximum heat generation rates shown in Figures 7.2 and 7.4.[2] The possibility of sulfate volatilization from the spray-solidified PW-2 product when stored under molten conditions (see Section 6) was not considered in the data presented here.

The maximum heat generation rate in a solidified waste may be greater than a reasonable rate of heat dissipation in a final storage environment such as in a salt mine; consequently, interim storage of the solidified product may be desirable. The aging before storage of the pots in salt depends on economic choice. However, a proposed Federal Regulation suggests that solidification of all high level wastes be completed before the fuel has been out of the reactor for 5 years.[4]

Data from both nonradioactive[5] and radioactive WSEP demonstrations have been used in projecting typical chemical flowsheets for spray solidification. Sufficient confidence in radioactive demonstration has been reached to specify most of the necessary details for flowsheets with both PW-1 and PW-2 wastes. Figure 7.3 shows Mode A flowsheet for the solidification of one tonne* of PW-1 waste aged 180 days (out of the reactor) and Figure 7.4 is a Mode A flowsheet for the solidification of one tonne of PW-2 waste aged 90 days. The

* Tonne is a metric ton (1000 kilogram) of U and Pu in a fuel from which the waste is derived.

aging time for each waste is the minimum out-of-reactor time prior to spray solidification for which the maximum allowable heat generation rate is obtained for an 8-inch diameter waste container stored in air. Because spray solidification is a continuous process, the processing rate is independent of pot size (except for the time required to change out the pots). The heat rate density and maximum heat generation rate in a pot depend, however, on pot size. The two flowsheets presented are based on air cooling of the pot. As seen in Figure 7.2. , considerably higher heat rate densities can be attained if the pots are filled and cooled in water. For this condition, the out-of-reactor time approaches 40 days for PW-2 waste. The PW-2 waste is shown coming into the plant at a dilute 500 liters/tonne to minimize precipitation and plugging of lines by sodium rare earth sulfate solids.[4]

The presence of about 70 percent of the total ruthenium in the gaseous solidifier effluents is not likely to be as important as the difficult-to-remote 0.5 percent of the total ruthenium which remains airborne in the gas stream from the solidifier condenser. This fact becomes evident when the WSEP data are projected to the concentrations of ruthenium expected in the effluents from the solidification of a typical waste. The projected radionuclides in the fractionator bottoms and in the fractionator distillate are given in Tables 7.2 and 7.3,* respectively, The 10M nitric acid produced in the frationator would contain approximately 1200 curies of ruthenium, less than 1 curie of ^{144}Ce-Pr and less than 0.1 curie of strontium-90 for waste equivalent to each metric ton of fuel. The gross radioactivity ($\beta + \gamma$) in 200 liters of acid could range from 2 to 10 Ci/liter.

---

* Tables 7.2 and 7.3 appear on page 7.14.

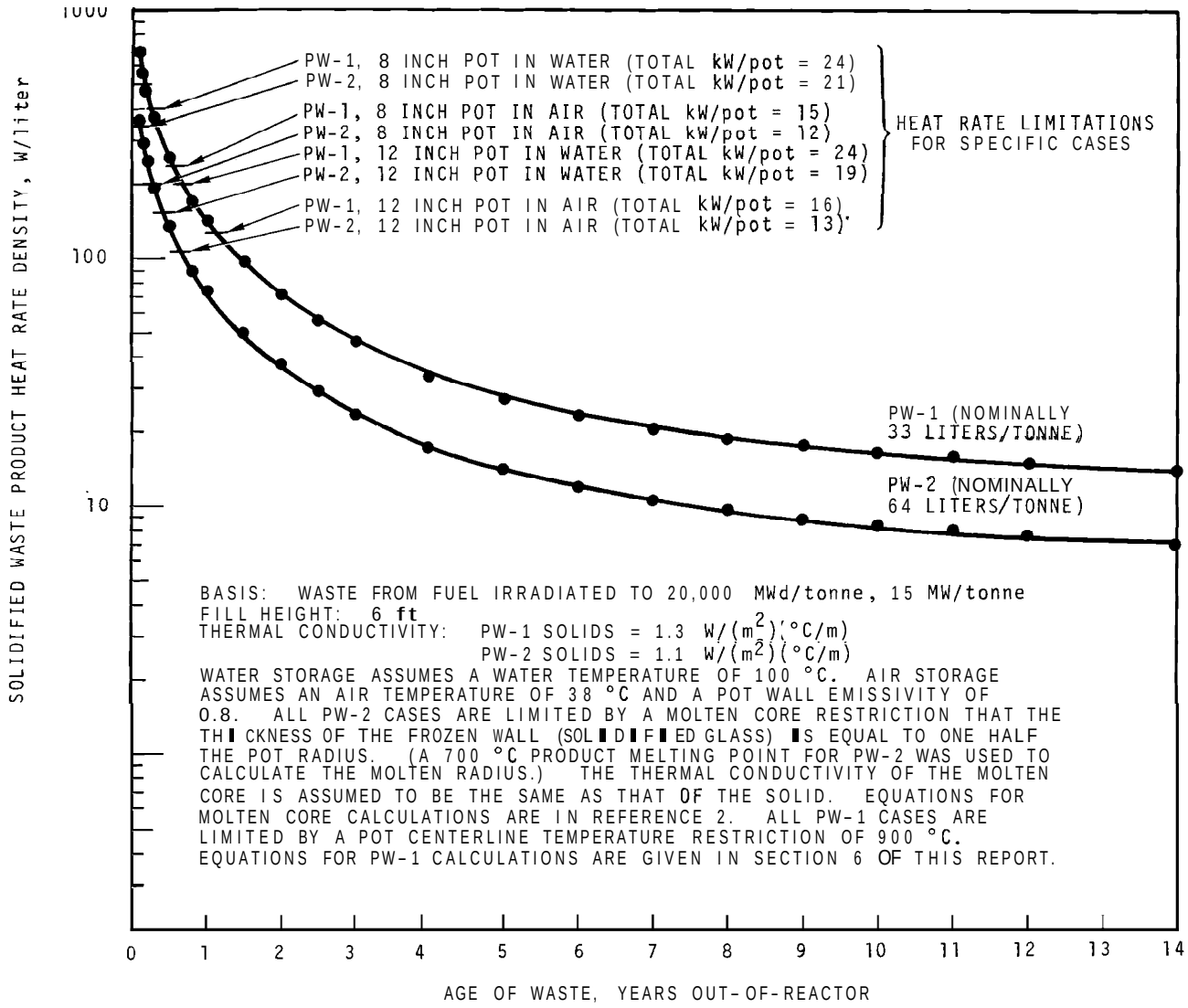

FIGURE 7.2. Heat-Age Environment Relationships for High-Level Radioactive Spray Solidified Waste Showing Fission Product Heat Rate Density Limits

FLOW SHEET CODE FOR FIGURES 7.3 AND 7.4

STREAM

1. Incoming waste from processing one tonne of power reactor fuel with an integrated exposure of 20,000 MWd/tonne at a specific power of 15 MW/tonne. The computer program ISOGEN was used to determine the fission product data for this reactor fuel. The total fission product values do not include the transuranium or the transplutonium values. The ^{144}Ce values include its naturally occurring daughter ^{144}Pr.
2. Nonradioactive chemical additives to the raw waste. Additives for PW-1 include phosphoric acid (75 weight %), lithium hydroxide, and sodium hydroxide. Additives to PW-2 waste include phosphoric acid (75 weight %), aluminum nitrate, calcium nitrate, and lithium hydroxide. Sodium metaphosphate ($NaPO_3$) is added directly to the melter as a solid additive (-6/+10-mesh particles) in the PW-2 flowsheet only.
3. Chemically adjusted waste, or feed to the spray calciner.
4. Gas flow to atomize the incoming feed prior to calcination in the spray calciner. Unheated air is used with an internal-mix atomizing nozzle (Spraying Systems Co., Setup No. 42 is used here).
5. Gas flow for back pulsing the porous metal filters to dislodge collected calcine fines. Air heated to about 350 °C and at 40 to 60 psig is used here with a nominal 2-minute cycle and a 2-second pulse. A nominal effective flow of 1.0 scfm of air was used for the 5 filter venturis.
6. Solid additive (flux) to melter during PW-2 flowsheet only. Sodium metaphosphate particles at -6/+10-mesh are used here.

7. Heated air purge to maintain a dry, free-flowing solid flux in the solids addition line.
8. Solidifier condensate. A total of 60% of the total nitrate is assumed present in this stream. A total of 5% of the sulfate in the PW-2 waste is present in this stream.
9. Solidifier noncondensables and entrained particles not removed by the solidifier condenser. A total of 40% of the total nitrates, 0.5% of the total ruthenium and 0.05% of the nonvolatile materials (entrainment) is estimated for this stream. A total gas flow of 15 scfm including inleakage at the solidifier is used for this stream.
10. Melt flow to receiver. Actual flow may be continuous or by periodic batches.
11. Evaporator bottoms. The bottoms will be recycled and eventually returned to the solidifier. They may be recycled to the solidifier feed or to the high level liquid waste system of the reprocessing plant. A total of 100 liters of 5M HNO_3 was arbitrarily selected to represent the volume to be recycled for each tonne equivalent of waste processed.
12. Evaporator strip water. A HNO_3 concentration of 0.02M is used here.
13. Evaporator overheads. A HNO_3 concentration of 0.5M is used here.
14. Solidifier noncondensibles and entrained particles not removed in the evaporator condenser. A total of 40% of the total nitrate is assumed present in this stream.
15. Fractionator bottoms. A HNO_3 concentration of 10M is used for calculations. This stream can be used for fuel element dissolution or possibly in solvent extraction scrub streams.

16. Fractionator distillate.
17. Fractionator distillate. This can be used as makeup water for fuel dissolution, solvent extraction scrub streams, or it can be treated as low level waste.
18. Scrubber solution, approximately 1 to 2M NaOH. Twenty-five percent of the nitrate from the solidifier is removed by the scrubber.
19. System off-gas. Five percent of the total feed nitrate is present in this stream.
20. Solidified ceramic product. Pot is welded and stored.

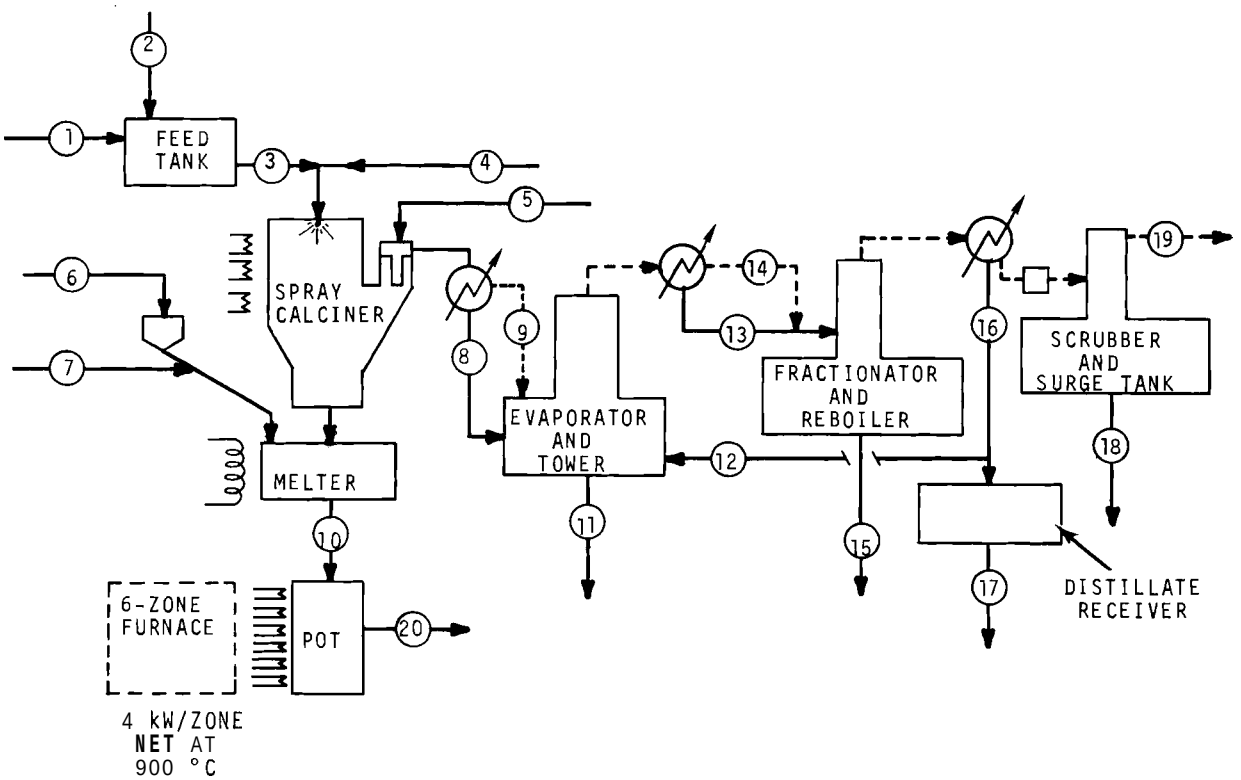

FIGURE 7.3. **Typical Flowsheet for Processing One Tonne of PW-1 Waste with Mode A Operation**[a] **(Continued on opposite page)**

(b)	1	2	3	4	5	6	7	8	9	10	11	12	13	14	15	16	17	18	19	20
	L	L	L	G	G	S	G	L	G	S	L	L	L	G	L	L	L	L	G	S
	378	110	448	3.9×10^5	4.8×10^4	0	0	455	7.2×10^5	33	100	2610	3060	7.2×10^5	172	2890	283	500	7.2×10^5	33
r/hr	Batch	Batch	17.3	1.4×10^4	1.7×10^3 (Pulsed)	0	0	16	2.5×10^4	1.2	Batch	92	110	2.5×10^4	6.1	102	10	Batch	2.5×10^4	Batch
	1.6×10^6	-	1.6×10^6	-	-	-	-	1.3×10^5	9.4×10^2	1.5×10^6	1.3×10^5	20	1×10^3	∿10	9.4×10^2	20	2	6	$<5 \times 10^{-3}$	1.5×10^6
Ci (c,d)	1.9×10^5	-	1.9×10^5	-	-	-	-	1.3×10^5	9.5×10^2	5.7×10^4	1.3×10^5	20	9.5×10^2	∿10	9.5×10^2	20	2	6	$<2 \times 10^{-5}$	5.7×10^4
	4.8×10^4	-	$4.8 \sim 10^4$	-	-	-	-	24	0.1	4.8×10^4	20	4×10^{-5}	0.1		0.1	5×10^{-5}	5×10^{-6}	1×10^{-3}	$<2 \times 10^{-8}$	4.8×10^4
	7.4×10^5	-	7.4×10^5	-	-	-	-	3.7×10^2	1	7.4×10^5	3.7×10^2	7×10^{-4}	1	$\sim 1 \times 10^{-2}$	1	7×10^{-4}	7×10^{-5}	1×10^{-2}	$<4 \times 10^{-7}$	7.4×10^5
Rate, W	7930	-	7930	-	-	-	-	1180	8	6750	1180	∿0	8	∿0	8	∿0	∿0	∿0	∿0	6750
s, kg	30.6	8.71	39.3	-	-	-	-	0.02	Lo	39.3	0.02	Lo	Lo	Lo	Lo	Lo	Lo	Lo	Lo	39.3
	21.3	-	21.3	-	-	-	-	1.23	0.01	20.1	1.23	∿0	0.01	∿0	0.01	∿0	∿0	∿0	∿0	20.1
, kg	51.9	8.71	60.6	-	-	-	-	1.25	0.01	59.3	1.25	∿0	0.01	∿0	0.01	∿0	∿0	∿0	Lo	59.3
	2460	-	2460	-	-	-	-	1480	980	<1	500	52	1530	980	1720	58	6	615	120	<1
	0.08	46.8	46.9	-	-	-	-	0.02	∿0	46.9	0.02	∿0	∿0	∿0	∿0	∿0	∿0	∿0	∿0	46.9
	52.0	55.5	107.5	-	-	-	-	1.27	0.01	106.2	1.27	∿0	0.01	∿0	0.01	∿0	∿0	∿0	∿0	106.2

uivalent tonne of PW-1 waste at 20,000 MWd/tonne, 15 MW/tonne aged 180 days, product receiver stored in air.
g code explanation sheet.
ium only and no daughters.
does not include the effect on the ruthenium of the recycle of the solidifier condensate (containing 70% of the
e raw waste) to the feed tank. With this recycle stream, the equilibrium ruthenium data was calculated to be
rojected values presented here (Reference 8).

FIGURE 7.3. (contd)

Code Number[b]	1	2	3	4	5	6	7	8	9	10	11	12	13	14	15	16	17	18
Phase L = Liquid	L	L	L	G	G	S	G	L	G	S	L	L	L	G	L	L	L	L
G = Gas																		
S = Solid																		
Volume, liter	378	110	448	3.9×10^5	4.8×10^4	0	0	455	7.2×10^5	33	100	2610	3060	7.2×10^5	172	2890	283	500
Average Rate, liter/hr	Batch	Batch	17.3	1.4×10^4	1.7×10^3 (Pulsed)	0	0	16	2.5×10^4	1.2	Batch	92	110	2.5×10^4	6.1	102	10	Batch
Radioactivity:																		
Total, Ci	1.6×10^6	-	1.6×10^6			-	-	1.3×10^5	9.4×10^2	1.5×10^6	1.3×10^5	20	1×10^3	~10	9.4×10^2	20	2	6
Radioruthenium, Ci[c,d]	1.9×10^5	-	1.9×10^5			-	-	1.3×10^5	9.5×10^2	5.7×10^4	1.3×10^5	20	9.5×10^2	~10	9.5×10^2	20	2	6
^{90}Sr, Ci	4.8×10^4	-	$4.8 \sim 10^4$			-	-	24	0.1	4.8×10^4	20	4×10^{-5}	0.1	$\sim 1 \times 10^3$	0.1	5×10^5	5×10^{-6}	1×10^{-3}
^{144}Ce, Ci[d]	7.4×10^5	-	7.4×10^5			-	-	3.7×10^2	1	7.4×10^5	3.7×10^2	7×10^{-4}	1	$\sim 1 \times 10^2$	1	7×10^4	7 ×	
FP Heat Generation Rate, W	7930	-	7930			-	-	1180	8	6750	1180	~0	8	~0	8	~0	~0	Lo
Non-FP Metal Oxides, kg	30.6	8.71	39.3			-	-	0.02	Lo	39.3	0.02	~0	Lo	Lo	Lo	Lo	~0	Lo
FP Oxides, kg	21.3	-	21.3			-	-	1.23	0.01	20.1	1.23	~0	0.01	Lo	0.01	LO	LO	~0
Total Metal Oxides, kg	51.9	8.71	60.6			-	-	1.25	0.01	59.3	1.25	~0	0.01	Lo	0.01	~0	~0	~0
Nitrates, g-mole	2460	-	2460			-	-	1480	980	<1	500	52	1530	980	1720	58	6	615
Phosphate, kg	0.08	46.8	46.9	-	-	-	-	0.02	~0	46.9	0.02	~0	LO	~0	Lo	Lo	LO	~0
Total Oxide, kg	52.0	55.5	107.5	-	-	-	-	1.27	0.01	106.2	1.27	~0	0.01	LO	0.01	LO	~0	~0

a. Basis of 1.0 equivalent tonne of PW-1 waste at 20,000 MWd/tonne, 15 MW/tonne aged 180 days, product receiver stored in air.
b. See accompanying code explanation sheet.
c. Includes ruthenium only and no daughters.
d. Ruthenium data does not include the effect on the ruthenium of the recycle of the solidifier condensate (containing 70% of the ruthenium in the raw waste) to the feed tank. With this recycle stream, the equilibrium ruthenium data was calculated to be 3.3 times the projected values presented here (Reference 8).

FIGURE 7.3. (contd)

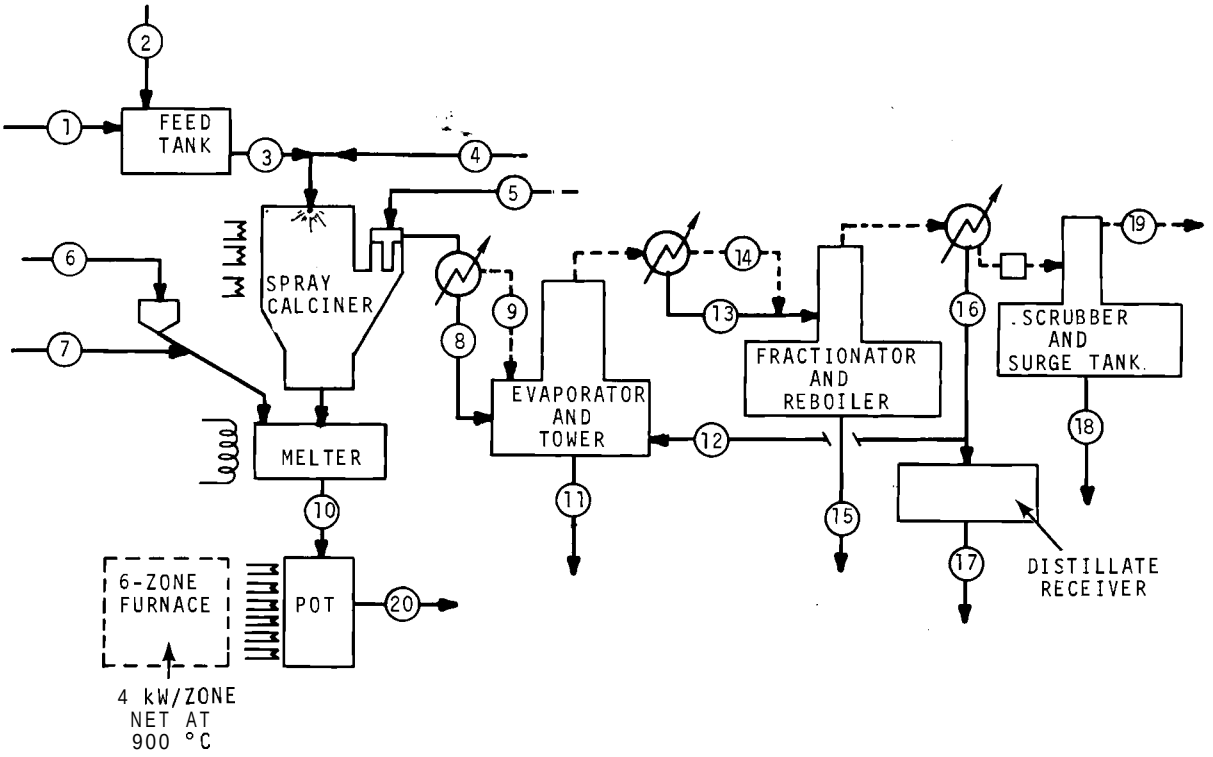

FIGURE 7.4. **Typical Flowsheet for Processing One Tonne PW-2 Waste with Mode A Operation[a] (Continued on opposite page)**

Code Number[b]	1	2	3	4	5	6	7	8	9	10	11	12	13	14	15	16	17	18
	L	L	L	G	G	S	G	L	G	S	L	L	L	G	L	L	L	L
phase L = Liquid G = Gas S = Solid																		
Volume, liter	500	200	700	5.7×10^5	8.2×10^4[i]	18.6 (45.4)[c]	1.4×10^5	656	1.2×10^6[h]	63		2770	3430	1.2×10^6	194	3230	462	500[g]
Average Rate, liter/hr	Batch	Batch	14.6	1.2×10^4	1.7×10 Pulsed	(0.95)	2.5×10^3	13.3	2.5×10^4	1.3	Batch	58	71	2.5×10^4	Batch	67	Batch	Batch
Radioactivity:																		
Total, Ci	2.9×10^6	-	2.9×10^6					2.2×10^5	1.6×10^3	2.7×10^6	2.2×10^5	20	1.6×10^3	~16	1.6×10^3	22	3	10
Radioruthenium, Ci[j,k]	3.2×10^5	-	3.2×10^5					2.2×10^5	1.6×10^3	9.6×10^4	2.2×10^5	20	1.6×10^3	~16	1.6×10^3	22	3	10
^{90}Sr, Ci	4.8×10^4	-	4.8×10^4					24	0.1	4.8×10^4	24	3×10^5	0.1	1×10^3	0.1	3×10^5	5×10^6	$1 \times 10^-$
^{144}Ce, Ci[f]	9.3×10^5	-	9.3×10^5					4.6×10^2	2	9.3×10^5	4.6×10^2	6×10^4	2	2×10^{-2}	2	6×10^4	9×10^5	$2 \times 10^-$
FP Heat Generation Rate, W	1.3×10^4	-	1.3×10^4					1.6×10^3	12	1.1×10^4	1.6×10^3	~0	12	~0	12	~0	~0	~0
Non-FP Metal Oxides, kg	26.1	24.2	50.3			14.9		0.02	~0	65.2	0.02	~0	~0	~0	~0	~0	~0	~0
FP Oxides, kg	21.3	-	21.3					1.24	0.01	20.0	1.24	~0	0.01	~0	0.01	~0	~0	~0
Total Metal Oxides, kg[d]	47.4	24.2	71.6			49.0		1.26	0.01	119.3	1.26	~0	0.01	~0	0.01	~0	~0	~0
Nitrates, g-mole	2030	740	2770					1660	1110	<1	500[g]	55	1715	1110	1940	65	10	690
Phosphate, kg[e]	0.16	43.3	43.5			34.1		0.02	~0	77.6	0.02	~0	~0	~0	~0	~0	~0	~0
Sulfate, kg	26.3	-	26.3					1.32	~0	25.0	1.32	~0	~0	~0	~0	~0	~0	~0
Total Oxide, kg	73.9	67.5	141.4			49.0		2.60	0.01	187.8	2.60	~0	0.01	~0	0.01	~0	~0	~0

a. Basis of 1.0 equivalent tonne of PW-2 waste at 20,000 MWd/tonne, 15 MW/tonne, aged 90 days, product receiver stored air.
b. See accompanying code explanation sheet
c. Values in parentheses are total kg and kg/hr, total volume obtained using theoretical density of solid $NaPO_3$.
d. Total oxides includes sulfate as SO_3 and phosphate as P_2O_5.
e. Phosphate reported as P_2O_5.
f. Includes both ^{144}Ce and daughter ^{144}Pr.
g. Values in brackets represent a periodic (batch) removal of accumulated waste and do not enter in volume or nitrate balances.
h. Basis of 15 scfm with remainder of gas being inleakage to the spray solidifier.
i. Nominal filter blowback air flow of 1.0 scfm for 16 venturis with 0.111-inch throat diam; 2 second pulse every 2 minutes.
j. Includes ruthenium only and no daughters.
k. Ruthenium data does not include the effect on the ruthenium of the recycle of the solidifier condensate (containing 70% of the ruthenium in the raw waste) to the feed tank. With this recycle stream, the equilibrium ruthenium data was calculated to be 3.3 times the projected values presented here (Reference 8).

FIGURE 7.4. (contd)

1	2	3	4	5	6	7	8	9	10	11	12	13	14	15	16	17	18	19	20
L	L	L	G	G	S	G	L	G	S	L	L	L	G	L	L	L	L	G	S
)	200	700	5.7×10^5	8.2×10^4 (i)	18.6 (45.4) (c)	1.4×10^5	656	1.2×10^6 (h)	63	100 (g)	2770	3430	1.2×10^6	194	3230	462	500 (g)	1.2×10^6	63
tch	Batch	14.6	1.2×10^4	1.7×10^3 Pulsed	(0.95) (c)	2.5×10^3	13.3	2.5×10^4	1.3	Batch	58	71	2.5×10^4	Batch	67	Batch	Batch	2.5×10^4	Batch
9×10^6	-	2.9×10^6	-	-	-	-	2.2×10^5	1.6×10^3	2.7×10^6	2.2×10^5	20	1.6×10^3	∿16	1.6×10^3	22	3	10	$<3 \times 10^{-5}$	2.7 ×
2×10^5	-	3.2×10^5	-	-	-	-	2.2×10^5	1.6×10^3	9.6×10^4	2.2×10^5	20	1.6×10^3	∿16	1.6×10^3	22	3	10	$<3 \times 10^{-5}$	9.6 ×
8×10^4	-	4.8×10^4	-	-	-	-	24	0.1	4.8×10^4	24	3×10^{-5}	0.1	$\sim 1 \times 10^{-3}$	0.1	3×10^{-5}	5×10^{-6}	1×10^{-3}	$<5 \times 10^{-8}$	4.8 ×
3×10^5	-	9.3×10^5	-	-	-	-	4.6×10^2	2	9.3×10^5	4.6×10^2	6×10^{-4}	2	$\sim 2 \times 10^{-2}$	2	6×10^{-4}	9×10^{-5}	2×10^{-2}	$<9 \times 10^{-7}$	9.3 ×
3×10^4	-	1.3×10^4	-	-	-	-	1.6×10^3	12	1.1×10^4	1.6×10^3	∿0	12	∿0	12	∿0	∿0	∿0	∿0	11,000
.1	24.2	50.3	-	-	14.9	-	0.02	∿0	65.2	0.02	∿0	∿0	∿0	∿0	∿0	∿0	∿0	∿0	65.2
.3	-	21.3	-	-	-	-	1.24	0.01	20.0	1.24	∿0	0.01	∿0	0.01	∿0	∿0	∿0	∿0	20.0
.4	24.2	71.6	-	-	49.0	-	1.26	0.01	119.3	1.26	∿0	0.01	∿0	0.01	∿0	∿0	∿0	∿0	119.3
30	740	2770	-	-	-	-	1660	1110	<1	500 (g)	55	1715	1110	1≥40	65	10	690	130	<1
16	43.3	43.5	-	-	34.1	-	0.02	∿0	77.6	0.02	∿0	∿0	∿0	∿0	∿0	∿0	∿0	∿0	77.6
.3	-	26.3	-	-	-	-	1.32	∿0	25.0	1.32	∿0	∿0	∿0	∿0	∿0	∿0	∿0	∿0	25.0
.9	67.5	141.4	-	-	49.0	-	2.60	0.01	187.8	2.60	∿0	0.01	∿0	0.01	∿0	∿0	∿0	∿0	187.8

nne of PW-2 waste at 20,000 MWd/tonne, 15 MW/tonne, aged 90 days, product receiver stored air.
anation sheet
total kg and kg/hr, total volume obtained using theoretical density of solid $NaPO_3$.
ate as SO_3 and phosphate as P_2O_5.
.
ughter ^{144}Pr.
nt a periodic (batch) removal of accumulated waste and do not enter in volume or nitrate balances.
inder of gas being inleakage to the spray solidifier.
r flow of 1.0 scfm for 16 venturis with 0.111-inch throat diam; 2 second pulse every

d no daughters.
clude the effect on the ruthenium of the recycle of the solidifier condensate
enium in the raw waste) to the feed tank. With this recycle stream, the
was calculated to be 3.3 times the projected values presented here

FIGURE 7.4. (contd)

The nitric acid produced in the fractionator could be recycled to the reprocessing plant for fuel dissolution or for other "head-end" reprocessing steps. However, the fractionator distillate has no recycle value as such, but can also be reused as makeup water in the reprocessing plant. The effect of airborne ruthenium is most apparent in the magnitude of the additional decontamination required far the fractionator distillate shown in Table 7.3, While the cerium and strontium concentrations are approximately 100 to 10,000 times the 10CFR20 release limits, ruthenium is the controlling constituent at approximately 1,000,000 times its limit.[6] A careful additional distillation of the distillate could bring all values (except possibly ruthenium), to below the 10CFR20 limits. The bottoms from this redistillation step would likely be recycled in the overall waste management scheme in the reprocessing plant. Alternative methods for treating the distillate have been studied.[7] These include adsorption, electrodialysis and electrodeionization, ion exchange and oxidation and volatilization. Of these, the most suitable method appeared to be two-stage electrodialysis followed by ion exchange.

The secondary effect of the recycle of ruthenium to the solidifier feed stream has not been demonstrated. However, for the continuous recycle of the evaporator bottoms (70%of the ruthenium in the raw waste) about a three-fold increase in the total ruthenium concentration in the auxiliary process streams could be expected at steady state.[8]

Recent studies have shown that the key to clean process effluents is to stop the difficult-to-remove airborne radionuclides (especially ruthenium) in the solidifier off-gases at the front-end of the auxiliary off-gas train. As previously

discussed in Section 5, information is now available to permit the design of improved equipment which is necessary to adequately decontaminate the off-gases from waste solidification.

REFERENCES FOR SECTION 7

1. H. H. Van Tuyl. ISOGEN - A Computer Code for Radioisotope Generation Calculations. HW-83785. Available from Clearinghouse for Federal scientific and Technical Information, September 1964.

2. J. D. Kaser. "Estimation of Molten Core Size in Waste Storage Vessels and Frozen Wall Waste Melters," Quarterly Progress Report, Research and Development Activities, Fixation of Radioactive Residues, edited by A. M. Platt, BNWL-1003, Battelle-Northwest, Richland, Washington, pp. 23-29. February 1969.

3. D. W. Brown and J. E. Mendel. "Study of High Temperature Storage of Solidified Waste Products Containing Sulfates," Quarterly Progress Report, Research and Development Activities, Fixation of Radioactive Residues, November-December, 1968, January, 1969. edited by A. M. Platt, BNWL-1003, Battelle-Northwest, Richland, Washington, pp. 43-45. February 1969.

4. Federal Register, vol. 34, no. 105, p. 87-12. June 3, 1969.

5. J. D. Moore. Waste Solidification Engineering Prototypes, Design Verification Testing of Spray Solidification Equipment, BNWL-1117. Battelle-Northwest, Richland, Washington, July 1969.

6. Code of Federal Regulations: Rules and Regulations, Title 10: Atomic Energy; Part 20: Standards for Protection Against Radiation; Appendix B, Table II, Columns 1 and 2. United States Atomic Energy Commission, August 9, 1966.

7. C. J. Touhill, B. W. Mercer, and A. J. Shuckrow. Treatment of Waste Solidification Condensates, BNWL-723. Battelle-Northwest, Richland, Washington. July 1968.

8. W. K. Winegardner. Unpublished Data. Battelle-Northwest, Richland, Washington, ("Recycle of Volatile Component.") May 1969.

8.0 FUTURE WORK

In order to fulfill the objectives of the WSEP technical program for the spray solidification process, additional information is needed with respect to process requirements and product characterization.

8.1 WASTE TYPES

To complete requirements that would adequately demonstrate solidification of PW-1 or PW-2 type wastes, thermal maximum* should be demonstrated for one of these wastes.

The solidification of two other waste types likely to be encountered in future nuclear power cycles should also be demonstrated. These wastes are currently scheduled for demonstration. One of the wastes is typical of a low salt, high fission product waste from thermal reactor fuels (exposed to 45,000 MWd/tonne at 30 MW/tonne) produced by "clean" Purex reprocessing (i.e., low iron, low sodium, and no sulfate). The other waste results from reprocessing of spent core fuels from liquid metal fast breeder reactors. Near-optimum chemical flowsheet requirements for these wastes should also be obtained.

8.2 EQUIPMENT AND PROCESS REQUIREMENTS

It is desirable to reduce the volatilization of ruthenium from the spray solidifier (i.e., by reducing feed acidity and/or adding a chemical reductant to the feed). The effect of phosphate and calciner temperature on ruthenium volatility should be established.

---

* Thermal maximum in WSEP is the quantity of heat/unit volume of solidified waste which will produce a centerline temperature of 900 °C or a pot wall temperature of 427 °C when the pot is stored in either ambient temperature air or in water at 100 °C.

To assure adequate feed atomization in WSEP, improved control of the feed rate to the solidifier is desired. The addition of a mechanical scraper to the bottom conical section of the calciner could also aid in eliminating downtime required to remove deposition in this area.

An extended spray solidification run (on the order of 1000 hours) would be helpful in identifying any process problems associated with long-term operation, and establishing equipment reliability. This test could probably be performed with equally valid results with a nonradioactive solidification system.

The governing mechanism which affects calciner and melter capacity should be established to provide information for scale-up. A suitable construction material which is less expensive than platinum may be desirable for the continuous melter.

The in-pot melting concept (where the spray calcined waste is melted directly in the final storage container) should be demonstrated with one of the waste types.

8.3 AUXILIARY SYSTEMS

The effect of Mode B operation on cleanup of effluents from the spray solidifier should be determined using high level radioactive liquid waste.

Although the acid fractionator bottoms and distillate contained low levels of radioactivity, improved cleanup of these streams is desirable to improve the efficiency of their reuse in a fuel reprocessing plant. Thus, demonstration of methods to improve cleanup of these effluents are desirable. Demonstrations of methods are also desirable to improve ruthenium removal from the solidifier off-gas prior to the

auxiliary evaporator. Sampling of the gaseous effluent streams from the condensers and the caustic scrubber in the auxiliary system should be done to provide data to improve characterization of ruthenium and other radioactive species in the effluents. The results from such characterization studies can then be applied to improve cleanup of the effluent streams.

8.4 FILLED POT PERFORMANCE

Long-term characteristics of the filled pots should be investigated. Observations so far are confirming the expectations that initial and short-term effects would be small in pots filled by the spray solidification process. Since the "oldest" pot is less than 3-years old, longer-term effects are not yet known. Future work in this area is outlined in the product evaluation program,[1] and presented briefly in the following discussion.

In the studies to be carried out, selected filled waste containers will be placed into controlled environment storage in the Solids Storage Engineering Test Facility (SSETF).[1,2] In these tests, investigations will be performed to determine the effects of storage temperature, radiation, and time upon the physical and chemical properties of the crystalline, rock-like ceramic formed by spray solidification.

This controlled exposure consists of placing waste containers in individual environmental storage pods wherein different storage media can be used and different storage temperatures can be maintained. The SSETF facility can accommodate as many as 16 waste containers for testing. These tests will include storage temperatures up to 100 °C in water and up to 600 °C in air. The environmental storage conditions, temperature distribution throughout the solidified waste, and pressure within the waste container will be monitored. Samples

can also be taken from the vapor space above the solidified waste. Some containers will periodically be removed from the environmental pod and carefully core-drilled to remove a sample of the solidified waste. A cap will then be welded over the container wall penetration and the container returned to storage.

The core samples will be used to investigate the possibility that certain important parameters change with the type of storage conditions used, and/or with time. Measurements that are planned include leachability (in water), dispersibility, and crystallinity. The samples will also be used to investigate the extent, if any, of fission product redistribution during long-term storage.

REFERENCES FOR SECTION 8

1. V. P. Kelly. Waste Solidification Program Volume III Design Features of the Facilities and Equipment for the WSEP Product Evaluation Program, BNWL-832. Battelle-Northwest, Richland, Washington, December 1968.

2. A. G. Blasewitz, J. E. Mendel, K. J. Schneider, and R. J. Thompson. Status Report on the Waste Solidification Demonstration Program, BNWL-1083. Battelle-Northwest, Richland, Washington, June 1969.

9.0 APPENDIX

9.1 RUN DESCRIPTION

This appendix briefly describes WSEP radioactive Runs SS-1 through SS-6. Following the run descriptions, Tables 9.1 through 9.8 present general information for all runs on feed compositions, operating parameters and results, material balances, fission product distribution, and decontamination factors, respectively. Figures 9.1 through 9.3 show schematic diagrams of the equipment.

Run SS-1

The first engineering scale conversion of highly radioactive aqueous wastes to ceramic by the spray solidification process was completed in January 1967.

During 37 hours of continuous operation, a total of 603 liters of adjusted sulfate-free, PW-1 waste (at 455 liters per tonne) was reduced to a phosphate ceramic containing 83,000 curies of radioactivity (including 5700 curies of radioruthenium) which produced an internal heat rate density of 7.5 W/liter. This demonstration was equivalent to solidifying wastes generated from the reprocessing 1.3 tonnes of 45 year-old, 20,000 MWd/tonne power reactor fuel at 15 MW/tonne. A total of 120 kilograms* (38 liters) of ceramic product, containing a heat generation rate of 285 watts from radionuclide decay, was collected in a 12-inch diameter, 8-foot long, 304L stainless steel receiver.

The run was terminated after 37 hours of continuous operation due to a buildup of solid deposits inside the calciner which partially plugged the calciner outlet to the melter. The calcine deposition problem was caused by poor air atomization

---

* An estimated 20 to 30 kg of solids was held up inside calciner.

of the feed. Consequently, run objectives including the following were only partially attained:

- Demonstration of spray solidification of PW-1 feed.
- Filling a 12-inch diameter storage pot with 120 liters of ceramic solid generating 12.5 W/liter.
- Determination of the path of radionuclides through the process equipment.

The atomization of the PW-1 feed with an external-mix nozzle was inadequate and resulted in some droplets too large to calcine to a state of dryness with the existing equipment. This problem was resolved in later runs by the use of an internal-mix spray nozzle. The inadequate atomization of the PW-1 feed was first indicated by the wide fluctuations in the internal calciner temperatures. The erratic temperature behavior began after 25 hours of continuous operation which had been free from major problems.

The external weir on the melter was used until it froze after 25 hours of continuous operation. It could not be reopened by increasing the weir furnace temperature.

The desired melt heat generation rate (12.5 W/liter) in the final solid was not attained, because inadequate agitation in the radioactive waste storage tank prevented transfer of sufficient heat-generating solids in the Purex waste to the feed makeup tank.

Melt was batch-dumped satisfactorily through the melter freeze valve during the final 12 hours of the run after the melter weir froze and could not be opened by increasing the weir furnace temperature. For successful melt discharge, the weir tip temperature needed to be increased. Melt stalagmites formed when melt dripped in an erratic pattern from the weir

onto the unheated upper portion of the pot. The stalagmites were manually broken up and knocked down into the pot with a steel rod, as increasing the pot wall temperature to 850 °C did not prevent the stalagmite formation.

Cumulative off-gas decontamination factors (DF's) of 10^3 for nonvolatiles from solidifier to evaporator were as predicted based on data from previous nonradioactive runs. The cumulative DF for radioruthenium across the solidifier was 1.4, from solidifier through the evaporator was 10^3, and from the solidifier to the fractionator distillate was 10^6. DF's of 10^6 for nonvolatiles to the acid fractionator distillate receiver, as measured by liquid samples, were lower than expected. Actual nonvolatile DF values were probably higher than these, because contamination of the aqueous samples occurred during the sampling process.

The effectiveness of sugar reductant for retaining ruthenium in the evaporator could not be compared against operation without reductant since the run was discontinued before the intended no-reductant period started.

The capacity of the off-gas vent system was not large enough to maintain adequate vacuum in the solidifier during filter blow-back. Air in-leakage into the solidifier at a rate of up to 9 scfm taxed the capacity of the system.

Before the run, a technique for cleaning the calciner filters was tested after the filter partially plugged during vent system tests. The technique allowed in-place cleaning of the filters, where previously the filters were removed and soaked in acid. Nitric acid was fed (at about 2 liters/hr) into the upper filter chamber while the filters were blown back with saturated steam for 3.5 hours. This technique reduced the filter pressure drop from 13 to 7 inches of water.

It is believed that a longer cleaning period and a higher nitric acid addition rate would have reduced the steady-state pressure drop to a more desirable operating level (about 2 to 4 inches of water).

An estimated 20 to 30 kilograms of calcine accumulated on the calciner walls during the run. Seventy to eighty percent of the calcine was removed following the run by spraying the calciner internal walls with nitric acid pumped through a tank-cleaning nozzle. Viewing the inside of the calciner barrel with a portable television camera before and after cleaning showed that the barrel was clean enough for the following runs. The cleaning nozzle was mounted on a moveable wand which was inserted into the calciner barrel through a hole in the top flange. Acid was sprayed against the walls for 50 hours at an average rate of 150 liters/hr and was collected in the melter where it was continuously jetted back to the head tank.

Run SS-2

The second spray solidification demonstration run with a sulfate-free, PW-1 waste flowsheet was successfully completed during April, 1967. During Run SS-2, a total of 419,000 curies of radioactivity (including 5300 curies of radioruthenium) was interfused in 48 liters of phosphate ceramic product to give an internal heat rate density of 44 W/liter. A total of 790 liters of PW-1 waste at 455 liters/tonne was spray calcined and melted during 58 hours of continuous operation. This demonstration was equivalent to the solidification of 1.7 tonnes of 3.6-year-old waste from a power reactor fuel with a 20,000 MWd/tonne total exposure at 15 MW/tonne.

An effective thermal conductivity of 1.6 $W/(m^2)(°C/m)$ or 0.91 $Btu/(hr)(ft^2)(°F/ft)$ for the ceramic product was calculated using the pot calorimetry values of 2100 watts and the

air-cooled (in-furnace) centerline-to-wall temperature difference of 70 °C in the 8-inch diameter pot receiver.

An internal-mix spray nozzle (Spraying Systems Co., Setup No. 42) performed well during the run. No calcine deposits in the calciner barrel or cone were indicated during the run or were seen by televiewing the inside of the calciner barrel after the run. Consequently, the internal-mix nozzle performance was far superior to that of the external-mix nozzle (Spraying Systems Co., Setup No. 5) used in Run SS-1 and earlier nonradioactive tests.

Feed atomization with unheated air did not result in feed nozzle plugging, although plugging occurred briefly while preheating the atomizing air to 320 °C.

Feed flow fluctuations which contributed to a high pressure drop across the calciner filters occurred in 10 to 15-minute cycles during the last third of the run. The cause of the fluctuations was not determined, but was probably related to erratic operation of the magnetic flowmeter and the feed control valve. The filter pressure drop increased from 12 to an undesirably high value of 18 inches of water during the last 7 hours, thereby causing the solidifier to pressurize slightly (up to 4 inches of water) during filter blowback.

The filters had not been adequately cleaned before the run, since the pressure drop was 9 inches of water when the feed was first turned on. Following the run, the filters were again flushed with nitric acid while blowing back with saturated steam. A normal steady-state pressure drop of about 4 inches of water was achieved after flushing and drying the filters.

The melter was discharged in 5 liter batches at rates of about 17 liters/hr through the freeze valve, since the weir furnace was inoperable. Overheating the product pot during filling with 1100 °C melt was prevented by turning off the zone of the pot furnace at the melt level an hour prior to melt dumping. The pot was filled evenly without stalagmite formation. In this respect, batch-dumping of the melt is superior to drip-discharge from the melter weir.

About 75 percent of the ruthenium in the feed was volatilized to the condensate receiver tank used for the modified Mode B operation (see Figure 9.2). Cumulative DF's to the condensate based on the total radioactivity in the feed to the solidifier were 1.4 and 5.2×10^3 for ^{106}Ru and ^{144}Ce-Pr, respectively.

The modified Mode B operation was used to isolate the solidifier condensate from the evaporator to determine the extent of ruthenium volatilized from the solidifier and to demonstrate control of ruthenium evolution during the concentration of dilute raw waste in the evaporator. Small amounts of sugar reductant were added to the evaporator bottoms and to the fractionator tower throughout the run to suppress ruthenium evolution. The modified Mode B operating conditions and the sugar additions presented no unique problems, and the distribution of radionuclides in the auxiliary equipment was similar to that following Run SS-1 with a Mode A operation. Cumulative DF's to the evaporator condensate based on the radioactivity in the concentrated raw waste in the evaporator at the end of the run were 6.3×10^2 and 5.6×10^4 for ^{106}Ru and ^{144}Ce-Pr, respectively.

Cumulative DF's for the concentrated raw waste to the fractionator distillate were 8.3×10^5 and 8.6×10^7 for ^{106}Ru and ^{144}Ce-Pr, respectively. Based on the cumulative DF's,

the sugar reductant additions to the evaporator and to the fractionator tower did not significantly reduce the evolution of ruthenium from either the evaporator or the fractionator. Cumulative DF's for the evaporator waste to the building stack off-gases were greater than 3×10^{10} and 1×10^{11} for ^{106}Ru and ^{144}Ce-Pr, respectively. Radioactivity concentrations in the fractionator distillate following the run were 1.3×10^{3} times the 10CFR20 limits for ^{106}Ru and 22 times the limit for nonvolatile radionuclides (primarily ^{144}Ce-Pr). Off-gas stack radioactivity concentration for ^{106}Ru was less than 0.007 times the 10CFR20 limits while nonvolatile ^{90}Sr concentration was 0.0015 times the limit.

Run SS-3

The third spray solidification demonstration run was completed in July 1968. Run SS-3 was the first spray solidification run with a simulated, high-salt, high-sulfate Purex Waste (PW-2). The principal objective for Run SS-3 was to demonstrate the overall operability of the spray solidifier on a chemical and radiochemical PW-2 flowsheet. Other operational objectives included:

- A demonstration of the feasibility of remotely adding a portion of the chemical additives as a solid flux directly to the melter with a solids addition system.
- A demonstration of batch dumping the PW-2 melt and uniform filling of a heated receiver pot.
- Filling of the 12-inch diameter pot receiver with melt product having a heat generation rate density of 37 W/liter (4440 watts total).

During Run SS-3, simulated PW-2 waste equivalent to that resulting from the reprocessing of 0.61 tonne of power reactor fuel. (20,000 MWd/tonne at 15 MW/tonne) with an equivalent aging time of 1.7 years was reduced to approximately 39 liters of ceramic product.

The solidifier was fed 357 liters of chemically adjusted PW-2 waste (additives of LiOH, $Ca(NO_3)_2$, $Al(NO_3)_3$, and H_3PO_4) at 582 liters/tonne in 31.6 hours of actual feeding time. In addition to the feed additives, solid sodium metaphosphate was added to the melter batchwise to reduce the calcine melting point to approximately 700 °C. The feed contained 420,000 curies of radioactivity including 26,000 curies of ruthenium.

Prior to starting feed to the solidifier, numerous equipment malfunctions occurred: the freeze valve electrical heaters failed, the feed tank agitator failed, and the feed pump began leaking. After the agitator was repaired and the pump replaced, the run was started without the freeze valve heaters by using a propane torch to heat the drain-freeze valve to batch discharge the product from the melter to the receiver pot.

During Run SS-3, a variety of problems caused seven interruptions of the feed to the solidifier. The first six interruptions caused 236 hours of downtime, and the last interruption caused termination of the run. The first two interruptions which occurred early in the run resulted from difficulties with the solids addition system. Following the second interruption which occurred after 7.8 hours of feeding when the solid addition line plugged at the calciner, the solids feeder was removed from the solidifier for modification. After adding a heated air purge to the solids feeder to minimize condensation and subsequent plugging at the entry point to the solidifier, the feeder performed satisfactorily for the remainder of the run. While the solids feeder was being modified, the original 12-inch pot was replaced with an 8-inch pot to shorten the run and thereby lessen the potential for embrittlement of the platinum freeze valve from exposure to the propane flame during dumping of the melter.

Although feed flow was resumed to the solidifier after installation of the second receiver pot, it was maintained only intermittently because periodic shutdowns (after 1 to 8 hours of feeding) were required to unplug the solidifier vent system. One shutdown was also required to replace the calciner vibrator air supply line. Significant quantities of calcine (10% of the total calcine produced) were entrained from the solidifier through a failed off-gas filter and resulted in plugging of the solidifier condenser (E-111) vent and drain lines. It was necessary to unplug the system several times by flushing the condenser with nitric acid. The run was eventually terminated when the inlet to the condenser became plugged and could not be unplugged by merely flushing the condenser.

Inspection of the solidifier off-gas filters after the run revealed that two of the 15 porous metal filters had failed. Both failures were located at the top of the filters just below a circumferential weld. One failure was a partial crack around the circumference of the filter, and the other was a large missing section of porous metal. The porous metal near the failure was much less ductile than that further down the length of the filter. Indications were that the actual failure (the loss of the large section of porous metal) occurred sometime after Run SS-2 and before the start of Run SS-3, and may have coincided with the striking of the calciner by a falling crane boom. A combination of mechanical fatigue and corrosion was suspected as the cause of the apparent loss in ductility of the porous metal.

The internal-mix spray nozzle performed satisfactorily. The use of unheated atomizing air prevented nozzle plugging while feeding, as in Run SS-2. The air side of the nozzle, however, did become partially plugged after the air was shut off during a shutdown period. The nozzle was removed from the solidifier, flushed, and returned to service.

A propane torch used as a heater allowed the PW-2 melt to be discharged batchwise from the melter without any difficulties via the drain-freeze valve. Due to the early termination of the run, only partial fills of the two heated receiver pots were attained. The approximately 29 liters of radioactive solidified waste collected in the second receiver pot (8-inch diameter 304L stainless steel) produced a heat rate density of 34 W/liter (1000 watts total based on feed analysis). The steady-state pot centerline temperature in the air-cooled furnace was 315 °C and the centerline-to-wall temperature difference was 80 °C. These values indicate an effective thermal conductivity of 1.1 $W/(m^2)(°C/m)$[0.64 $Btu/(hr)(ft^2)(°F/ft)$] for the solid waste product.

During the entire run, 76% of the ^{106}Ru, 10% of the ^{144}Ce-Pr, and 15.5% of the sulfur in the feed accumulated in the auxiliary evaporator. The very large accumulation of nonvolatile radioactivity was due to the failure of the off-gas filters. The amount of ^{106}Ru and sulfur volatilized from the solidifier was estimated as 73% and less than 7%, respectively.

A total of 0.24% of the total ^{106}Ru fed to the solidifier was volatilized from or carried through the evaporator and accumulated in the fractionator. The cumulative decontamination factor (DF_c) across the evaporator for ^{106}Ru was 3.2×10^2. The DF_c for ^{144}Ce-Pr was 2.5×10^4.

The DF_c across the fractionator was 2.0×10^2 for ^{106}Ru and 1.1×10^2 for ^{144}Ce-Pr.

A total of 1.2×10^{-3} percent of the ^{106}Ru and 4.5×10^{-6} percent of the ^{144}Ce-Pr in the feed to the solidifier accumulated in the fractionator distillate. These values were above the 10CFR20 release limits by factors of 3.6×10^4 and 1.1×10^3, for ^{106}Ru and ^{144}Ce, respectively. At the end

of the run, 2.9×10^{-3} percent of the ^{106}Ru and 1.9×10^{-6} percent of the radioactivity fed to the solidifier were present in the off-gas scrubber. The relatively high accumulation of radioactivity in both the fractionator distillate and the scrubber may have been due in part to contamination of the system at the beginning of the run as there was a considerable time lapse between pre-run and first run samples. A total of 25 percent of the nitrogen fed to the solidifier accumulated in the scrubber during the run. The radioactivity released with the off-gas to the stack was less than 0.004 times the 10CFR20 limit for ^{90}Sr and less than 0.0004 times the 10CFR20 limit for ^{106}Ru.

Run SS-4

The fourth spray solidification demonstration run was successfully completed during September 1968. Run SS-4 was the second demonstration with a sulfate-containing, PW-2 waste flowsheet.

During Run SS-4, waste equivalent to 0.89 tonnes of power reactor fuel (exposed to 20,000 MWd/tonne at 15 MW/tonne) and cooled 0.8 years, was interfused in 160 kilograms of ceramic product. The 56 liters of radioactive ceramic produced a heat-rate density of 93 W/liter (5200 watts total based on pot calorimetry measurements) in an 8-inch diameter, mild steel melt receiver. The steady-state pot centerline temperature in the air-cooled furnace was 505 °C and the centerline-to-wall temperature difference was 220 °C. These values convert to an effective thermal conductivity of 1.1 $W/(m^2)(°C/m)$ [0.64 $Btu/(hr)(ft^2)(°F/ft)$] for the ceramic product.

The solidifier was fed 500 liters of adjusted PW-2 waste at 560 liters/tonne in 40.5 hours at an average feed rate of 12.3 liters/hr. The feed, containing 1,400,000 curies of radioactivity (including 15,300 curies of radioruthenium), was

reduced in volume by a factor of 8.9 on a feed basis (or 6.0 on a basis of 378 liters/tonne waste). A total of 40.4 kilograms of solid, 6 to 10-mesh sodium metaphosphate ($NaPO_3$) was added to the melter in 0.5 kilogram batches every half-hour during the run to reduce the melting point of the solid waste to flowsheet conditions. The solids addition system was purged with air at 210 °C to prevent plugging.

All of the principal process factors including the atomization, filter operation, flow control systems, and the solid feeder system performed satisfactorily during the run. The calciner vibrator broke loose from its welded mounting plate on the calciner lid after 20 hours of continuous operation, and the calciner was shut down. The vibrator was replaced using a floating-type mounting arrangement and the run was completed without any further problems.

The internal-mix spray nozzle performed well, without plugging, for feed rates that ranged from 8 to 16 liters/hr and with unheated atomizing air flows from 6.4 to 7.4 scfm. The feed flow control was much better than during the previous run, and the internal calciner temperatures had correspondingly smaller fluctuations with less cycling.

The filter pressure drop increased from about 4 to about 7 inches of water when a blowback solenoid valve became stuck open about 9 hours into the run. The jammed blowback valve increased the noncondensable gas flow about 30 percent to about 15 scfm. However, there was no detectable permanent increase in the pressure drop across the filters on completion of Run SS-4. With the blowback air off, the pressure drop across the filters was between 1 and 2 inches of water before and after the run. The new off-gas filter assembly had two filters blown back at a time instead of three with the previous

assembly. The new filter assembly performed satisfactorily except for the jammed solenoid valve. The average instantaneous decontamination factor (DF_i) for ^{144}Ce-Pr increased from 5900 at the start to 96,000 as the run progressed with an average value of 47,000.

Sufficient vacuum was maintained in the solidifier during blowback, and the pressure drop across the solidifier condenser was negligible throughout the run (less than one-inch of water). This condition was aided by the newly installed parallel vent lines from the condenser which increased the vent capacity for the system by about a factor of three.

The melter furnace was operated at 930 °C with an average internal melt temperature of 870 °C. The melter was batch-dumped through the drain-freeze valve 12 times in about 4.5 liter batches at 3 to 4-hour intervals. As in Run SS-3, a propane torch was used to melt the frozen ceramic product in the drain-freeze valve to start the batch draining to the pot receiver. The overall average processing rate for Run SS-4 was 0.5 tonnes/day. The pot furnace was not heated during Run SS-4 and no stalagmites were formed in the pot. This confirmed the nonradioactive pilot plant information that unheated, mild steel melt receivers can be filled by the batch dumping method without stalagmite formation.

During the entire run, 11 percent of the ^{106}Ru and 0.1 percent of the nonvolatile radioactive species in the feed to the solidifier accumulated in the auxiliary evaporator. The overall radioruthenium balance was unusually poor, with only 40 percent of the radioruthenium accounted for. The auxiliary condensate samples indicated that the ruthenium did not leave the solidifier, and the solid waste samples accounted for less than 30 percent of the total ruthenium. Contrary to the normally unreliable low values reported for WSEP melt

samples, the analytical results for the melt samples from Run SS-4 checked quite closely for all radionuclides except radioruthenium. Thus, the cause of the poor ruthenium balance was not clear.

The cumulative decontamination factor, DF_c, across the WSEP auxiliary evaporator for ^{106}Ru was 76. Instantaneous DF_i's for ^{106}Ru ranged from 1300 to 2700. The cumulative DF_C for ^{144}Ce-Pr (representing the nonvolatile radionuclides) was 1700 and the instantaneous DF_i's ranged from 250 to 18,000.

A total of 0.1 percent of the ruthenium fed to the solidifier accumulated in the fractionator bottoms. The DF_c across the fractionator for ^{106}Ru was 47 and for ^{144}Ce-Pr was 375. Instantaneous DF_i's for ^{106}Ru ranged from 5 to 360. The DF_i's for ^{144}Ce-Pr were very low (less than 10) indicating that these samples were contaminated during in-cell sample handling.

The fractionator distillate contained concentrations of radionuclides which were above the 10CFR20 release limits by a factor of 1700 for the nonvolatiles (^{144}Ce-Pr) and by a factor of 150,000 for the volatile radionuclides (^{106}Ru).

The final gaseous effluent at the stack contained concentrations of radionuclides which were below the detection limits of the available equipment. These below-limit values correspond to concentrations which were less than 0.0016 times the 10CFR20 limit for nonvolatiles (assuming all background material was ^{90}Sr) and less than 0.0004 times the 10CFR20 limit for volatiles (assuming all background material was ^{106}Ru.

About 40 percent of the nitrogen volatilized from the solidifier was removed from the off-gases in the solidifier condenser (E-111). Of the remaining 60 percent, about 30 percent was removed by the auxiliary evaporator-fractionator equipment and about 20 percent was removed by the auxiliary

scrubber before the caustic scrub solution was neutralized. Nitrogen accumulation data for the scrubber bottoms is shown in Figure 5.7. The efficiency of the scrub solution for removing oxides of nitrogen is seen to drop off sharply after the scrub solution is neutralized.

Run SS-5

The fifth demonstration of the spray solidification process was completed during October, 1968. Run SS-5 was the third demonstration of the PW-1 (sulfate-free) waste flowsheet for the spray solidification process. During Run SS-5, waste equivalent to 2.0 tonnes of power reactor fuel (20,000 MWd/tonne at 15 MW/tonne) with an equivalent aging time of 1.2 years was interfused in 209 kilograms of ceramic product. The 66 liters of radioactive ceramic produced a heat-rate density of 127 W/liter (8200 watts total by pot calorimetry measurement) in an 8-inch diameter 304L stainless steel melt receiver. The steady-state centerline temperature in the air-cooled furnace was 630 °C and the centerline-to-wall temperature difference was 270 °C. These values convert to an effective thermal conductivity of 1.2 $W/(m^2)(°C/m)$ (0.69 $Btu/(hr)(ft^2)(°F/ft)$ for the ceramic product.

The solidifier was fed 887 liters of adjusted sulfate-free PW-1 waste at 446 liters/tonne in 53.2 hours at an average feed rate of 16.7 liters/hr. The feed, containing 2,500,000 curies of radionuclides including 16,800 curies of ratioruthenium was reduced in volume by a factor of 13.8, (or 11.4 on a 378 liters/tonne basis).

An internal-mix spray nozzle used to spray the PW-1 feed into the solidifier performed well throughout the run. Feed atomization with unheated air (less than 30 °C) was uneventful

except for three periods when the remotely-operated nozzle cleanout needle was required to remove plugs of solids. The floating-type pneumatic vibrator on top of the calciner removed the calcine powder successfully from the barrel and cone. No indication of wall scaling in the solidifier was given by the solidifier internal and wall temperatures.

The blowback system performed quite satisfactorily as demonstrated by an average filter pressure drop of about 6 inches of water throughout the run.

The average melter processing rate was 0.9 tonnes/day. The melter furnace operated at 1125 °C with an internal melt temperature of 1050 °C. A new drain-freeze valve cooling assembly was used throughout the run. The melter was batch dumped through the drain-freeze valve eleven times in about 6 liter batches every 5 to 6 hours. The drain-freeze valve began to drain about 2 minutes after the air was turned off to the cooling coils around the drain tube. The use of air-cooled coils were usually an effective means of sealing the drain tube following each batch dump of melt to the receiver. However, on one occasion, the calciner vacuum was increased to normal before the drain tube was completely resealed. Air was pulled up through the drain tube causing melt to spatter onto the upper walls of the melter.

The receiver was held at 850 °C at the start of the run, but after approximately two zones of the receiver were filled, the pot furnace was shut off and the run completed by batch dumping into an unheated pot without stalagmite formation.

During the entire run, 70 percent of the total ruthenium fed to the solidifier was volatilized from the solidifier and accumulated in the WSEP evaporator. The rate of volatilization remained constant throughout the run as indicated by the constant accumulation of ^{106}Ru in the auxiliary evaporator.

Entrainment of nonvolatiles represented by ^{144}Ce-Pr was 0.064%, which was a factor of about 2 lower than during Run SS-4.

About 60% of the total nitrogen volatilized from the solidifier was absorbed in the solidifier condensate (average concentration was 3.3M nitrogen). About 75% of the total nitrogen was found in the evaporator and the fractionator at the end of the run. The scrubber solution was neutralized from 2M to 0.04M NaOH at the end of the run, and contained about 20% of the total nitrogen fed to the solidifier.

Ruthenium equivalent to 0.64% of the total fed to the solidifier accumulated in the fractionator. The rate of ruthenium accumulation in the fractionator remained constant throughout the run. These two facts indicated that ruthenium was not being efficiently scrubbed from the gas phase by the solidifier condenser.

The cumulative decontamination factor, DF_c, for ^{106}Ru across the WSEP auxiliary evaporator was 110. Instantaneous DF's for ^{106}Ru ranged from 200 when feed was on to 14,000 when feed was off. Cumulative decontamination factors for ^{144}Ce-Pr representing nonvolatiles was 1500 across the evaporator. Instantaneous DF's for ^{144}Ce-Pr averaged greater than 1000.

The DF_c across the fractionator for ^{106}Ru was 120 and for ^{144}Ce-Pr was 3200. Instantaneous ^{144}Ce-Pr DF's averaged greater than 10^2.

The fractionator distillate receiver contained a fraction of the total radioactivity fed to the solidifier equal to 5.9×10^{-5} for ruthenium and 3×10^{-10} for nonvolatiles. These values were above the 10CFR20 release limits for ^{106}Ru and ^{144}Ce-Pr by factors of 1.8×10^5 and 1.1×10^3, respectively.

Fractional losses of radioactivity in the off-gases to the stack were less than 8.9×10^{-13} for gross beta (as ^{144}Ce-Pr) and less than 2.8×10^{-10} for ^{106}Ru. These values correspond to less than 0.03 and less than 0.0004 of the 10CFR20 release limits for ^{90}Sr and ^{106}Ru, respectively.

Run SS-6

The sixth demonstration of the spray solidification process was completed during November 1968. Run SS-6 was the fourth radioactive demonstration of the spray solidification process with a PW-1 (sulfate-free) waste flowsheet. During Run SS-6, waste equivalent to 1.9 tonnes of power reactor fuel (20,000 MWd/tonne at. 15 MW/tonne) with an equivalent aging time of 0.8 years was interfused in 207 kilograms of ceramic product. The 65 liters of radioactive ceramic produced a heat-rate density of 168 W/liter (11,100 watts total by pot calorimetry measurement) in an 8-inch diameter, 304L stainless steel melt receiver. The steady-state centerline temperature in the air-cooled furnace was 735 °C and the center-to-wall temperature difference was 305 °C. These values convert to an effective thermal conductivity of 1.5 W/(m^2)(°C/m) [0.87 Btu per (hr)(ft^2)(°F/ft)] for the ceramic product.

The solidifier was fed 986 liters of adjusted, sulfate-free PW-1 waste at 521 liters/tonne in 55.6 hours at an average feed rate of 17.7 liters/hr. The feed containing 3,000,000 curies of radionuclides (including 24,000 curies of ruthenium) was reduced in volume by a factor of 15.6 (or 11.0 on a 378 liters/tonne basis).

The floating-type pneumatic vibrator failed after 28.6 hours of run time and was replaced. The vibrator was successful in removing the powder from the calciner barrel. In the cone, however, powder accumulated to completely block

the melter inlet on two occasions, after 1.0 and 16.2 hours of run time. On both occasions, the cone was mechanically cleared by rodding through the solids-feeder port.

After the run, inspection revealed considerable buildup of melt at the melter inlet with about a 50 percent reduction in the cross-sectional area of the melter inlet. The buildup was attributed to back-sparging of the melt through the drain tube during run startup as the result of an incomplete seal and inadequate pressure control. The melter viewing port also became plugged with melt from the sparging at this same time and had to be rodded out. The melt buildup was slumped from the melter inlet by insulating the top of the melter and heating the melter to 1200 °C. Back-sparging can be and normally is avoided by assuring that the drain tube is sealed prior to operating the melter at increased vacuum and temperature.

A calcine deposit was also found in the conical bottom section of the calciner directly below the drying chamber after the run. A total of 10 to 12 kilograms of caked calcine was removed from this area. The deposition is believed to have accumulated over the last two to five runs (the solidifier was flushed prior to Run SS-2) as a result of inadequate feed atomization caused by either intermittent off-standard conditions in feed flow or nozzle erosion. During Runs SS-2 through SS-6, a total of 240 hours of feed-on time was accumulated on the equipment and a total of 850 kilograms of ceramic product was produced. Inspection of the drying chamber revealed it to be relatively clean. After the run, the spray nozzle was removed and replaced with a new one because of the deposition in the calciner and because the nozzle used approximately 20 percent more air during Runs SS-5 and SS-6, apparently caused by internal erosion of the nozzle.

The filter pressure drop averaged about 6 inches of water throughout the run indicating that the filters and the filter blowback system performed satisfactorily. Inspection of the filters following the run showed them to be relatively clean.

The air-cooled coils provided an effective means of sealing the drain-freeze valve following each batch dump of the melt to the receiver. The receiver was filled uniformly by batch dumping into an unheated pot without stalagmite formation. The melter furnace was operated at 1150 °C with an average internal melt temperature 1120 °C. The freeze-valve cooling assembly installed prior to Run SS-5 was again successfully used throughout the run. The melter was batch dumped through the drain tube eleven times in about 6 liter batches every 5 to 6 hours. The average equivalent melter processing rate was 0.82 tonnes/day.

During the entire run, 47 percent of the ^{106}Ru in the feed to the solidifier was volatilized from the solidifier, while 0.071 percent of the other combined radioactive species were entrained from the solidifier.

About 75 percent of the total nitrogen volatilized from the solidifier accumulated in the evaporator and the fractionator. The scrubber solution was continuously neutralized from 2M NaOH at the start of the run to 0.07M NaOH at the end of the run, and about 20 percent of the total nitrogen was accumulated in the scrubber solution during the run.

During the last 21 hours of the run, sugar was added to the evaporator to suppress the evolution of ruthenium. A total of 94.5 liters of 0.175M sugar solution was added at an average rate of 5.25 liters/hour. The sugar addition rate of 0.92 moles/hour was about five times the rate for Runs SS-1 and SS-2 but, as during the previous runs, the sugar addition

produced no discernible reduction in the accumulation rate of ruthenium in the fractionator. The cumulative decontamination factor, DF_c, for ^{106}Ru across the evaporator remained about the same with or without a sugar addition. The DF_c for ^{106}Ru across the WSEP auxiliary evaporator was 0.73×10^2. Instantaneous decontamination factors, DF_i's for ^{106}Ru ranged from 1.5×10^2 near the start of the run to 2.7×10^6 after the feed was off. A nearly constant buildup of ruthenium in the acid fractionator and a higher than expected ruthenium concentration in the fractionator indicated ineffective scrubbing of ruthenium in the solidifier condenser. The DF_i's across the evaporator for nonvolatile materials represented by ^{144}Ce-Pr averaged greater than 10^4. The DF_c across the evaporator for ^{144}Ce-Pr was 1.6×10^3.

The DF_c across the fractionator was 3.1×10^2 for ^{106}Ru and less than 5×10^2 for ^{144}Ce-Pr. The DF_i's for ^{106}Ru averaged greater than 8.0×10^2.

The fractionator distillate contained a fraction of the total radioactivity fed to the solidifier of 2.0×10^{-5} for ^{106}Ru and 8×10^{-9} for nonvolatiles. These values were above the 10CFR20 release limits for ^{106}Ru and ^{144}Ce-Pr by factors of 2.1×10^4 and 5.1×10^3, respectively.

Fractional losses of radioactivity in the off-gases to the stack were less than 2.0×10^{-10} for ^{106}Ru and equal to 5.3×10^{-13} for gross beta (as ^{144}Ce-Pr). These values were below the 10CFR20 limits for ^{106}Ru and ^{90}Sr by factors of 4×10^4 and 1.6×10^3, respectively.

9.2 STARTUP PROCEDURE FOR SPRAY SOLIDIFICATION PROCESS

The startup sequence for the spray solidification equipment involves heating up the calciner and the melter, then stabilizing the calciner temperature at the desired operating

temperatures while metering atomizing air and water to the atomizing nozzle. With the calciner temperatures leveled out with a water feed rate corresponding to the desired feed rate, the feed is gradually blended with the water until the switch-over to feed is completed.

9.2.1 Spray Calciner and Calciner Furnace

Each of the three furnace zones is heated to 700 °C in 100 °C increments over a 2 to 4 hour period. While the calciner furnace is heating, the atomizing air and the purge air flows (including the solids feeder air purge – when used) are turned on and the desired vacuum is established in the solidification and the auxiliary off-gas systems. When the filter chamber temperature has reached 200 °C, the filter blow-back system is started up. The filter blowback gas supply line and heaters are blown down with air to remove any residual moisture. Then the blowback gas heater is turned on to permit the blowback gas temperature to be controlled at 300 to 350 °C. A temperature limit of 750 °C is preset on the temperature recorder-controller for each of the three spray calciner furnace zones.

With the calciner at operating temperature and the atomizing air on at 40 to 45 psig, water is fed to the spray calciner at about 15 liters/hr. After the calciner temperatures have leveled out, feed (waste) is slowly blended with the water over a 1 to 2 minute period until only waste is being fed and the water is off.

Prior to heatup of the melter furnace, cooling air is turned on to the melter neck and to the freeze valve cooling coil assembly. (The melter neck is cooled to a temperature below the calcine stick point, usually about 700 °C.) Both of these cooling air flows are external streams and, although

they represent heat sinks, they are not part of the calciner off-gas stream. The cooling air flows to the melter freeze valve coils are adjusted to maintain their temperatures about 100 °C below the remelt temperature of the solidified waste product.

The prescribed operating temperature and upper temperature limit are preset on the melter furnace temperature controller. The melter furnace is heated to 800 °C in 100 °C increments over a 2 to 4 hour period with manual adjustments of the melter temperature controller. The melter temperature controller is then switched to automatic control and the melter furnace is heated to the prescribed operating temperature for the run.

9.2.2 Receiver Furnace

The temperature controller for each of the six furnace zones is preset to the prescribed run conditions. Prior to heatup of the receiver furnace, cooling air is turned on to the thermocouple connector on the pot receiver. Each of six receiver furnace zones is heated to the prescribed operating temperature in 100 °C increments by manually increasing the temperature controller set point over a 2 to 4 hour period.

9.3 NORMAL OPERATING PROCEDURE

9.3.1 Spray Calciner

Under normal operating conditions, the feed rate to the spray calciner is controlled by manual adjustments to a prescribed rate which is then maintained by an automatic flow controller. Because the spray calciner temperatures will sense subtle changes in the feed rate, which may not be detected by the WSEP feed flow system, manual adjustments to the calciner feed rate are sometimes made after observing the calciner temperatures.

The calciner temperatures, feed flow rate, atomizing gas flow rate and pressure, calciner-melter vacuum (especially when back-blowing the filters), and the filter pressure drop are closely monitored and controlled during operation. Under normal operating conditions, the pneumatically-operated vibrator on the calciner is operated about once each minute for 2 to 4 seconds to remove powder which has adhered to the heat transfer surfaces.

The porous metal off-gas filters are automatically blown back (pulsed) every 2 minutes with a pulse of heated gas (steam or air at about 350 °C and 40 to 60 psig). The filter pressure drop is normally about 2 to 4 inches of water. An occasional higher pressure drop is usually reduced to this level by increasing the blowback frequency and/or blowback gas pressure for a short time. The calciner-melter vacuum is controlled by manual adjustments of the vacuum in the process vent system to maintain a vacuum in the calciner during filter blowback.

9.3.2 Melter

The melter furnace is controlled at a set temperature. Occasional adjustments may be made to compensate for changes in feed rates, etc., as indicated by temperatures of the melt itself. The temperature of the melt pool near the bottom of the melter is usually about 50 to 100 °C below the melter furnace temperature. The upper melt temperatures (near the melt surface) are used to monitor melter performance. Under normal operating conditions, the melter temperatures alone are adequate for monitoring the melter operation. However, occasional visual observations (i.e., via the melter sight glass) of the melt level and general operating conditions are helpful in the early detection of off-standard conditions.

The melt may be discharged to the product receiver continuously, using an overflow weir, or batchwise using a drain-freeze valve to periodically drain the contents of the melter. Batch-dumping of the melter via the drain-freeze valve is normally used to avoid the formation of stalagmites in the receiver pot which can occur in insufficiently heated pots with the lower melt transfer rates of the continuous overflow weir. The contents of the melter are periodically drained to the receiver pot by turning off the air to the cooling coil around the drain tube and allowing heat from the melter to thaw the frozen melt in the tube.

When the melter is batch dumped to the pot receiver, the vacuum is reduced to about 2 to 4 inches of water and the filter blowback is turned off. This is done to avoid backsparging through the freeze valve and subsequent spattering of melt onto the upper melter surfaces.

When the melt flow has slowed to a drip, the freeze valve cooling air is turned on and this freezes a plug of melt in the tube. Other conditions (i.e., filter blowback, vacuum) are then returned to normal.

When processing a PW-2 waste, the melting point of the PW-2 calcine is reduced to about 700 °C by adding sodium metaphosphate ($NaPO_3$) as a solid flux to the melter. The lower melter operating temperature minimizes the volatilization of sulfate from the melt. The solid flux is added to the melter batchwise every half-hour and just before each batch dump. The ratio of flux to calcine is adjusted to give the desired chemical composition of the final solid.

The melter furnace temperatures are controlled at 1150 °C to 1200 °C during processing of sulfate-free PW-1 waste. The

upper melt temperatures (near the melt surface) are maintained above 900 °C (melting point) throughout the accumulation of a batch of melt.

The nominal batch volume for the WSEP melter is about 5 liters of melt but may range from 4 to 8 liters. Grab samples of the molten waste are collected at the discharge of the drain or weir tube.

9.3.3 Melt Receiver

If necessary during filling of the receiver pot, each of the six zones of the receiver furnace is controlled at a set temperature sufficient for the incoming molten waste to spread out and uniformly fill'the pot receiver (heating the receiver is normally only required for continuous weir overflow type filling of the pot). As each of the six receiver zones becomes filled, furnace heat to the zone is discontinued. Cooling air is available for direct or indirect cooling of the receiver wall to confine temperatures within prescribed limits. During normal operation, the pot receiver temperatures in the zones above the melt level are monitored and are usually adequate to detect possible stalagmite formation. Occasionally, however, the receiver is visually checked as a preventive measure.

9.4 SHUTDOWN PROCEDURES

9.4.1 Spray Calciner

Over a period of about 2 minutes, the feed to the atomizing nozzle is gradually switched from feeding waste to feeding water. Water is fed to the spray calciner for about 30 minutes to flush the feed lines and is then shut off. When powder no longer enters the melter during filter blowback and vibrator cycles (usually by the end of the flush period), the solids

feeder, the blowback equipment (timer, air supply and air heater) and the vibrator equipment (timer and air supply) are shut off. The spray calciner furnaces are shut off, and when the calciner temperatures are below about 200 °C, the atomizing air flow is also shut off.

9.4.2 Melter

After the blowback and vibrator equipment have been shut down, the air to the cooling coils around the drain-freeze valve is slowly shut off. Vacuum is adjusted to 2 to 4 inches of water while the contents of the melter drain to the pot receiver. The air to the cooling coil is slowly turned on when the flow of melt slows to a drip and the freeze valve is resealed. The melter furnace and other melter equipment are then shut down.

9.4.3 Melt Receiver

After the contents of the melter have been emptied into the receiver pot, any heat to the receiver (if on) is discontinued. Cooling air is turned on to all the receiver furnace zones, and the filled pot receiver is stored in the receiver furnace until the internal temperatures have reached steady-state. The receiver pot is then removed from the furnace and is transferred to the storage rack for postrun inspection and evaluation.

9.5 POSTRUN FILLED POT PROCEDURES

The filled pot is inspected as soon as possible after the pot is removed from the receiver furnace. Each filled receiver pot is transferred from the pot receiver furnace to the pot storage rack where it is weighed, rodded to determine the depth of waste product, and inspected internally (with the aid of mirrors) and externally.

A calorimetry measurement is made as soon as possible to determine the total internal heat generation rate of the waste product in the filled pot receiver. Calorimetry data are usually obtained within a few days after the run to avoid fission product decay effects.

After welding the permanent lid to the filled pot, other nondestructive tests are made, including pot leak rates, a gross gamma radiation profile, and internal pressure changes.

TABLE 9.1. Nominal and Actual Feed Compositions Used in Spray Solidification **Runs** SS-1 Through SS-6

waste component	WSEP Subs.	PW-1, Nominal M	Actual PW-1 Concentration, M(a,b) SS-1	SS-2	SS-5	SS-6	PW-2, Nominal M	Actual PW-2, M(a,b) SS-3	SS-4
H^+		3.7	3.6	4.6	5.3	4.8	3.93	4.2	5.5
Fe^{+3}	(c)	0.93	0.95	0.95	0.75	0.797	0.445	0.412	0.415
Cr^{+3}		0.012					0.024		
Ni^{+2}		0.005					0.010		
Al^{+3}	(c)	0.001	0.071	0.071	0.19	0.105	0.001	0.303	0.31
Na^{+1}		0.138	0.729	0.397	0.67	0.596	0.93	0.91	1.02
U^{+6}		0.010					0.010		
NO_3^-		6.5	6.1	6.4	6.4	6.7	5.37	6.6	7.14
SO_4^{-2}		---					0.87	0.57(g)	0.66(g)
PO_4^{-3}		0.003	1.78	1.78	1.67	1.99	0.006	1.61	1.61
SiO_3^{-2}		0.010					0.010		
$Cs^+ + Rb^+$	K^+	0.042					0.042		
Sr^{+2}		0.0155					0.0155		
Ba^{+2}		0.0195					0.0195		
$(Y + RE)^{+3}$	RE^{+3}	0.12			0.19	0.15	0.12	0.20(g)	0.23(g)
Zr^{+4}		0.065					0.065		
$MoO_4^{-2} + TcO_4^{-2}$	MoO_4^{-2}	0.079					0.079		
Ru^{+4}		0.0032	0.0040	0.0025	0.0012	0.0039	0.0032	0.0046	0.0020
Ru^{+4}	Fe^{+3}	0.0288					0.0288		
Rh^{+2}	Co^{+2}	0.0074					0.0074		
Pd^{+2}	Ni^{+2}	0.017					0.017		
$Ag^+ + Cd^{+2}$	Cu^{+2}	0.0016					0.0016		
TeO_4^{-2}	SO_4^{-2}	0.0064					0.0064		
Additives to Waste									
							0.25		
Ca^{+2}							0.60		
Li^+		0.50					1.17		
Na^+		0.50					1.27(d)	1.07(e)	1.18(e)
PO_4^{-3} (Nominal)		1.74					1.61		
PO_4^{-3} (Nominal as Solid)(d)		---					1.27(d)	1.07(e)	1.18(e)
Final Feed									
Total volume, liters			1000	900	983	1102		1076	569
Concentration, liters/tonne			455	455	446	521		582	560
Specific Gravity at 25 °C			1.32	1.34	1.36	1.32		1.32	1.36
Solids, %			-25	-33	∿31	∿8		34	30
ΣM_T^+ (f)		4.78	4.90	4.56	4.59	5.47	6.45 (7.72)	6.07 (7.14)	6.11 (7.29)
$\Sigma M_T^+/P$ (f)		2.75	2.75	2.56	2.75	2.75	4.01 (2.68)	3.77 (2.66)	3.80 (2.61)
Total Radioactivity, Ci/liter			145	599	2260	3070		1185	2800
Radioruthenium, Ci/liter			9.8	6.7	18.9	24.2		72	31
Total Heat Rate Density, W/liter			0.55	2.5	9.3	11		4.8	11

a. Values are reported on a 378 liter/tonne basis.
b. Values reported are total concentrations including additives (if any) as determined by chemical analyses of the waste. All other chemical compositions are added quantitatively as given by nominal values.
c. Excess aluminum in 1WW waste was substituted for part of the total nominal iron (including iron substituted for ruthenium) in the waste.
d. Sodium metaphosphate, $NaPO_3$, was added to the melter as a -6/+10 mesh solid during PW-2 runs only.
e. Values reported are average values for total run on a 378 liter/tonne basis.
f. Values in brackets are for the total waste including the solid sodium metaphosphate additive.
g. Sulfate added to give 0.87 M but formation of insoluble rare-earth sulfate resulted in high rare-earth analyses and low sulfate analyses.

SOLIDIFIER DATA (Definitions are on following page)							
Spray Solidification Run Number	SS-1	SS-2	SS-3		SS-4	SS-5	SS-6
Date	1/4/67 1/6/67	4/26/67 4/29/67	Part 1 7/8/68	Part 2 7/19/68	9/11/68 9/17/68	10/16/68 10/18/68	11/5/68 11/8/68
Operating Mode[a]	A	B-Modified	A		A	A	A
Feed							
Type	PW-1	PW-1	PW-2		PW-2	PW-1	PW-1
Concentration, liters/tonne	455	455	582		560	446	520
Temperature, °C	50	30	40		30	25	20
Feed Rate, liters/hr	16.3	13.8	11.3		12.3	16.7	17.7
Total Feed Consumed, liters	603	789	357		500	887	986
Total Feed Time, hr	37	57.3	31.6		40.5	53.2	55.6
Total Down Time, hr	0.1	2.8	23.6		1	3.5	21
Total Curies in Feed to Solidifier	83,000	420,000	420,000		1,400,000	2,500,000	3,000,000
Total Curies of Ruthenium in Feed to Solidifier	5,700	5,300	26,000		15,300	16,800	24,100
Atomizing Feed Nozzle							
Type	External-mix	Internal-mix	Internal-mix		Internal-mix	Internal-mix	Internal-mix
Atomizing Gas	Air	Air	Air		Air	Air	Air
Atomizing Gas Flow, scfm	NA[d]	6.0	6.0		6.8	8.6	8.5
Atomizing Gas Pressure, psig	49-62	40	43		45	40	45
Atomizing Gas Temperature, °C	350	30-320	30		30	30	30
Calciner Vibrator							
Cycle, min	1	1	1		2	1	1
Pulse, sec	3-9	3	2		2	2	2
Air Supply Pressure, psig	60	60	60		60	55	55
Calciner Blowback Filters							
Blowback Gas	Steam	Steam	Steam		Air	Air	Air
Blowback Gas Temperature, °C	345	350	350		315	350	350
Blowback Gas Pressure, psig	26	20-33	27		40	40	45
Blowback Cycle, min	2	2	2		2	2	2
Blowback Pulse, sec	1.5	1.5	2		2	2	2
Filter Pressure Drop, inches of water							
Start of Run - Atomizing Gas On	NA[d]	NA	1		1.5	3	3
- Feed On	7	9	3		5.8	4.0	5.7
End of Run - Feed On	11	18	11[b]		7.5[c]	5.5	6.0
- Atomizing Gas On	NA	NA	NA		1.5[c]	3	3
Air Inleakage to Solidifier, scfm	~9	~4	~7		~4[c]	~8	~11
Total Noncondensible Gas Flow to Filters, scfm	11	11	13		11[c]	17	20
Total Gas Flow to Filter at 350 °C, cfm	~49	~45	~45		~39[c]	~62	~70
Filter Face Velocity (at 350 °C), ft/min	3.2	3.0	3.0		2.6[c]	3.9	4.4
Filter Chamber Temperature, °C	300	320	350		300	340	300
Filter De-entrainment Factor for Particulates Based on ^{144}Ce-Pr	2,000	5,000	10[b]		700	1,500	1,400
Calciner							
Internal Temperatures, °C - Top	475	490	370		410	375	325
- Bottom	600	600	520		560	500	460
Furnace Temperature, °C	700	700	670		680	695	700
Pressure, inches water - Normal	-10	-8	-12[b]		-8	-11	-10
- During Blowback	0	4 (max.)	5 (max.)[b]		-1	-3	-2
Average Furnace Power, kW - Atomizing Air on	NA	NA	10		12	13	12
- Feed On	NA	NA	20		26	26	21
Solids Addition							
Additive	None	None	$NaPO_3$		$NaPO_3$	None	None
Size, mesh (Tyler Series)	---	---	6 to 10		6 to 10	---	---
Addition Method	---	---	2 batches/hr		2 batches/hr	---	---
Addition Point	---	---	Calciner Cone		Calciner Cone	---	---
Total Additive, kg	---	---	25.4		40.4	---	---
Melter							
Internal Melt Temperatures, °C	1100	1100	880		900	1100	1130
Furnace Temperature, °C	1175	1150	910		930	1125	1150
Drain-Freeze Valve Temperature, °C - While Frozen	NA	NA	440		415	800	830
While Draining	980	950	800		835	950	940
Weir Temperature, °C	1000	850	420		460	800	840
Melt Discharge Method	65% Continuous 35% Batch	Batch	Batch		Batch	Batch	Batch
Average Volume, liters	6	5	5		5	6	6
Production Rate, liters/hr	1.2	0.8	1.2		1.4	1.2	1.2
Residence Time, hr	5	6	4		3	5	5
Furnace Power, kW	15.5	NA	7.0		7.5	14.4	14.5

PRODUCT DATA							
Product Receiver							
WSEP Pot Number	20	24	21	33	40	35	42
Material	304L	304L	304L	304L	Mild Steel	304L	304L
Diameter (OD), in.[e]	12.03	8.70	12.03	8.63	8.55	8.62	8.64
Wall Thickness, in.[e]	0.330	0.320	0.315	0.315	0.320	0.310	0.323
Length, in.[e]	96	95.7	95.2	95.2	95.5	95.6	95.5
Receiver Wall Temperature, °C[f]	780	860	640	640	60	840	60
Depth of Solidified Waste in Receiver, in.	33.2[g]	59.2	~16	~35	67.0	79.1	78.0
Leakage, atm-cm^3/sec	NA	NA	NA	NA	5.1×10^{-8}	NA	2.5×10^{-7}
Product							
Weight, kg	193[g]	152	27	77	160	209	207[i]
Volume, liters	55[g]	48	10	29	56	66	65[i]
Bulk Density, kg/liter	3.5[g]	3.16	~2.7	~2.6	2.86	3.19	3.18
Measured Density, kg/liter	3.15	3.19	2.7	2.7	2.80	3.24	3.18
Melting Point, °C (calcine without solid flux additive, °C)	870	925	700 (900)	700 (900)	775	875	950
Adjusted Feed to Solid Volume Ratio	13.6[h]	16.4[j]	9.6	9	8.9	13.8	15.6[i]
Waste to Solid Volume Ratio	11.3[h]	13.6[j]	6.2	5.9	6.0	11.4	11.0[i]
Equivalent Waste, tonne	1.1[h]	1.7	0.16	0.45	0.89	2.0	1.9
Average Processing Rate, tonne/day	0.8	0.7	0.50	0.45	0.5	0.9	0.8
Unit Volume, liters/tonne	34[h]	28	61	64	63	33	34
Fission Product Heat in Pot, W							
Based on Feed Analysis	285	2100	390	1000	5000	8200	10,800
Based on Pot Calorimetry	---[h]	2100	---	1300	5200	8200	11,100
Heat Generation Rate Density, W/liter	7.5[h]	44	39	34[k]	93	127	168
Total Radioactivity in Pot, Ci	72,000[h]	419,000	9,700	264,000[k]	1,400,000	2,500,000	3,000,000
Total Radioruthenium in Pot, Ci	1400[h]	1,200	2400	3800[k]	3,500	~5000	13,300
Equivalent Age of Waste, years	45	3.6	1.7	1.7[k]	0.8	1.2	0.8
Centerline Temperature, °C							
In Air-Cooled Furnace	190	285	NA	315	505	640	735
In Air	NA	NA	NA	---	340[l]	630	710
In Water	NA	385	NA	55	265	345	330[m]
Centerline-to-Wall ΔT, °C							
In Air-Cooled Furnace	30	70	NA	80	220	270	305
In Air	NA	NA	NA	NA	170[l]	285	345
In Water	NA	NA	NA	NA	220	295	285[m]
Effective Thermal Conductivity, K_e, W/(m^2)(°C/m)							
In Air-Cooled Furnace	1.3[h]	1.6	NA	1.1[k]	1.1	1.2	1.4
In Air at 30 °C	NA	NA	NA	NA	1.0[l]	1.2	1.3
In Water at 30 °C	NA	NA	NA	NA	1.1	1.1	1.1[m]
Radiation Reading at 6 Inches, rad/hr	2.5×10^3	1.1×10^4	NA	1.4×10^4	2.0×10^4	2.8×10^4	5.1×10^4
WSEP AUXILIARY DATA							
Evaporator (TK-113) Average Operating Conditions							
Bottoms, M HNO_3		1.5	4.6		5.0	5.0	4.9
Overheads, M HNO_3	0.1	0.02	0.4		0.4	0.5	0.5
Boiloff Rate, liters/hr	50	65	60		70	55	65
Strip Water Addition Rate, liters/hr	36	50	50		55	50	30
Volume, liters - Start	195	350	365		340	290	475
- End	155	235	220		270	450	310
Sugar Addition Rate, Moles/hr	0.13	0.17			0	0	0.92
Fractionator (TK-115) Average Operating Conditions							
Bottoms, M HNO_3	7.7	10	6.0		9.3	8.7	8.7
Overheads, M HNO_3	0.06	0.06	0.01		0.09	0.05	0.10
Boiloff Rate, liters/hr	45	60	50		65	55	60
Reflux Ratio	0.63	0.48	0.57		0.44	0.52	0.48
Volume, liters - Start	400	275	310		525	520	605
- End	705	710	865		560	640	805
Fractionator Distillate (TK-116)							
Bottoms, M HNO_3 - Start	0	0			0	0	0
- End	~0.04	0.06	0.05		0.05	0.05	0.09
Volume, liters - Start	185	210	190		220	220	215
- End	365	895	740		490	430	1,995
Scrubber (TK-118)							
Circulation Rate, liters/min	40	40	30		30	20	20
Bottoms, M NaOH - Start	2.1	0.7	1.5		1.3	2.0	2.2
- End	1.1	0	1.4		0	0.04	0.07
Volume, liters - Start	475	480	370		415	470	565
- End	360	270	310		335	475	395

Air Supply Pressure, psig						
Calciner Blowback Filters						
Blowback Gas	Steam	Steam	Steam	Air	Air	Air
Blowback Gas Temperature, °C	345	350	350	315	350	350
Blowback Gas Pressure, psig	26	20-33	27	40	40	45
Blowback Cycle, min	2	2	2	2	2	2
Blowback Pulse, sec	1.5	1.5	2	2	2	2
Filter Pressure Drop, inches of water						
Start of Run - Atomizing Gas On	NA[d]	NA	1	1.5	3	3
- Feed On	7	9	3	5.8	4.0	5.7
End of Run - Feed On	11	18	11[b]	7.5[c]	5.5	6.0
- Atomizing Gas On	NA	NA	NA	1.5[c]	3	3
Air Inleakage to Solidifier, scfm	∿9	∿4	∿7	∿4[c]	∿8	∿11
Total Noncondensible Gas Flow to Filters, scfm	11	11	13	11[c]	17	20
Total Gas Flow to Filter at 350 °C, cfm	∿49	∿45	∿45	∿39[c]	∿62	∿70
Filter Face Velocity (at 350 °C), ft/min	3.2	3.0	3.0	2.6[c]	3.9	4.4
Filter Chamber Temperature, °C	300	320	350	300	340	300
Filter De-entrainment Factor for Particulates Based on ^{144}Ce-Pr	2,000	5,000	10[b]	700	1,500	1,400
Calciner						
Internal Temperatures, °C - Top	475	490	370	410	375	325
- Bottom	600	600	520	560	500	460
Furnace Temperature, °C	700	700	670	680	695	700
Pressure, inches water - Normal	-10	-8	-12[b]	-8	-11	-10
- During Blowback	0	4 (max.)	5 (max.)[b]	-1	-3	-2
Average Furnace Power, kW - Atomizing Air on	NA	NA	10	12	13	12
- Feed On	NA	NA	20	26	26	21
Solids Addition						
Additive	None	None	$NaPO_3$	$NaPO_3$	None	None
Size, mesh (Tyler Series)	---	---	6 to 10	6 to 10	---	---
Addition Method	---	---	2 batches/hr	2 batches/hr	---	---
Addition Point	---	---	Calciner Cone	Calciner Cone	---	---
Total Additive, kg	---	---	25.4	40.4	---	---
Melter						
Internal Melt Temperatures, °C	1100	1100	880	900	1100	1130
Furnace Temperature, °C	1175	1150	910	930	1125	1150
Drain-Freeze Valve Temperature, °C - While Frozen	NA	NA	440	415	800	830
While Draining	980	950	800	835	950	940
Weir Temperature, °C	1000	850	420	460	800	840
Melt Discharge Method	65% Continuous 35% Batch	Batch	Batch	Batch	Batch	Batch
Average Volume, liters	6	5	5	5	6	6
Production Rate, liters/hr	1.2	0.8	1.2	1.4	1.2	1.2
Residence Time, hr	5	6	4	3	5	5
Furnace Power, kW	15.5	NA	7.0	7.5	14.4	14.5

PRODUCT DATA							
Product Receiver							
WSEP Pot Number	20	24	21	33	40	35	42
Material	304L	304L	304L	304L	Mild Steel	304L	304L
Diameter (OD), in.[e]	12.03	8.70	12.03	8.63	8.55	8.62	8.64
Wall Thickness, in.[e]	0.330	0.320	0.315	0.315	0.320	0.310	0.323
Length, in.[e]	96	95.7	95.2	95.2	95.5	95.6	95.5
Receiver Wall Temperature, °C[f]	780	860	640	640	60	840	60
Depth of Solidified Waste in Receiver in.	33.2[g]	59.2	∿16	∿35	67.0	79.1	78.0
Leakage, atm-cm^3/sec	NA	NA	NA	NA	5.1×10^{-8}	NA	2.5×10^{-7}
Product							
Weight, kg	193[g]	152	27	77	160	209	207[i]
Volume, liters	55[g]	48	10	29	56	66	65[i]
Bulk Density, kg/liter	3.5[g]	3.16	∿2.7	∿2.6	2.86	3.19	3.18
Measured Density, kg/liter	3.15	3.19	2.7	2.7	2.80	3.24	3.18
Melting Point, °C (calcine without solid flux additive, °C)	870	925	700 (900)	700 (900)	775	875	950
Adjusted Feed to Solid Volume Ratio	13.6[h]	16.4[j]	9.6	9	8.9	13.8	15.6[i]
Waste to Solid Volume Ratio	11.3[h]	13.6[j]	6.2	5.9	6.0	11.4	11.0[i]
Equivalent Waste, tonne	1.1[h]	1.7	0.16	0.45	0.89	2.0	1.9
Average Processing Rate, tonne/day	0.8	0.7	0.50	0.45	0.5	0.9	0.8
Unit Volume, liters/tonne	34[h]	28	61	64	63	33	34
Fission Product Heat in Pot, W							
Based on Feed Analysis	285	2100	390	1000	5000	8200	10,800
Based on Pot Calorimetry	---[h]	2100	---	1300	5200	8200	11,100
Heat Generation Rate Density, W/liter	7.5[h]	44	39	34[k]	93	127	168
Total Radioactivity in Pot, Ci	72,000[h]	419,000	9,700	264,000[k]	1,400,000	2,500,000	3,000,000
Total Radioruthenium in Pot, Ci	1400[h]	1,200	2400	3800[k]	3,500	∿5000	13,300
Equivalent Age of Waste, years	45	3.6	1.7	1.7[k]	0.8	1.2	0.8
Centerline Temperature, °C							
In Air-Cooled Furnace	190	285	NA	315	505	640	735
In Air	NA	NA	NA	---	340[l]	630	710
In Water	NA	385	NA	55	265	345	330[m]
Centerline-to-Wall AT, °C							
In Air-Cooled Furnace	30	70	NA	80	220	270	305
In Air	NA	NA	NA	NA	170[l]	285	345
In Water	NA	NA	NA	NA	220	295	285[m]
Effective Thermal Conductivity, K_e, W/(m^2)(°C/m)							
In Air-Cooled Furnace	1.3[h]	1.6	NA	1.1[k]	1.1	1.2	1.4
In Air at 30 °C	NA	NA	NA	NA	1.0[l]	1.2	1.3
In Water at 30 °C	NA	NA	NA	NA	1.1	1.1	1.1[m]
Radiation Reading at 6 Inches, rad/hr	2.5×10^3	1.1×10^4	NA	1.4×10^4	2.0×10^4	2.8×10^4	5.1×10^4
WSEP AUXILIARY DATA							
Evaporator (TK-113) Average Operating Conditions							
Bottoms, M HNO_3	3	1.5	4.6	5.0	5.0	4.9	
overheads, M HNO_3	0.1	0.02	0.4	0.4	0.5	0.5	
Boiloff Rate, liters/hr	50	65	60	70	55	65	
Strip Water Addition Rate, liters/hr	36	50	50	55	50	30	
Volume, liters - Start	195	350	365	340	290	475	
- End	155	235	220	270	450	310	
Sugar Addition Rate, Moles/hr	0.13	0.17		0	0	0.92	
Fractionator (TK-115) Average Operating Conditions							
Bottoms, M HNO_3	7.7	10	6.0	9.3	8.7	8.7	
Overheads, M HNO_3	0.06	0.06	0.01	0.09	0.05	0.10	
Boiloff Rate, liters/hr	45	60	50	65	55	60	
Reflux Ratio	0.63	0.48	0.57	0.44	0.52	0.48	
Volume, liters - Start	400	275	310	525	520	605	
- End	705	710	865	560	640	805	
Fractionator Distillate (TK-116)							
Bottoms, M HNO_3 - Start	0	0	0	0	0	0	
- End	∿0.04	0.06	0.05	0.05	0.05	0.09	
Volume, liters - Start	185	210	190	220	220	215	
- End	365	895	740	490	430	1,995	
Scrubber (TK-118)							
Circulation Rate, liters/min	40	40	30	30	20	20	
Bottoms, M NaOH - Start	2.1	0.7	1.5	1.3	2.0	2.2	
- End	1.1	0	1.4	0	0.04	0.07	
Volume, liters - Start	475	480	370	415	470	565	
- End	360	270	310	335	475	395	
Solidifier Condensate (TK-117)[n]							
Bottoms, M HNO_3 - Start	---	0.05	---	---	---	---	
- End	---	2.1	---	---	---	---	
Volume, liters - Start	---	85	---	---	---	---	
- End	---	1,185	---		---	---	

a. Equipment arrangement for Mode A and Mode B-modified is shown in Figures 9.1 and 9.2, respectively.
b. Broken calciner filters resulted in high calcine entrainment losses and loss of vent capacity to auxiliary off-gas train.
Stuck solenoid valve in filter blowback assembly added about 4 scfm to solidifier off-gas flow and reduced vent capacity.
d. NA = Not Available.
e. Prefill measurements made out of cell prior to run.
f. Startup conditions with empty pot receiver in receiver furnace at steady state temperatures.
g. Includes about 38 liters (120 kg) of radioactive waste product, about 4 liters (13 kg) of nonradioactive PW-1 solidified waste from four hour prerun test, and an estimated 13 liters (2.59 kg) of radioactive cell waste (metallic and ceramic) stored in product receiver prior to run.
Based on net product volume of 44 liters which includes estimated 20 kg of calcine retained in calciner (equivalent to about 6 liters of solid waste product).
Does not include about 10 to 12 kg of calcine retained in calciner (equivalent to about 3 to 4 liters of solid waste product) from Runs SS-3, 4, 5, and 6.
j. Higher volume reduction factors were attributed to lower sodium concentration in feed (See Table 9.1).
k. Based on fission product heat (watts) in product receiver as determined from feed data.
l. Data taken during February, 1969, with estimated 3600 watts of fission product heat in product receiver.
m. Data taken during March, 1969, with estimated 8100 watts of fission product heat in product receiver.
n. For Mode B-modified operation only.

TABLE 9.2. Operating Parameters and Results of Spray Solidification Demonstration for Runs SS-1 Through SS-6

DEFINITIONS FOR TABLE 9.2

Operating Mode: WSEP equipment arrangement. See Figures 9.1 and 9.2

Feed

Type - PW-1, 2: Purex Waste 1 or 2. See Table 9.1.

Concentration, liters/tonne - Liters of basic feed per metric tonne (2205 lb) of uranium processed.

Average Feed Rate, liter/hr - Average rate during total feed time.

Total Feed Time, hr - Total hours that feed was on to solidifier.

Total Down Time, hr - Total hours that feed was off between time feed first fed to solidifier and time feed shut off to end the run.

Atomizing Feed Nozzle

Type - External-mix nozzle, Spraying Systems Co., Setup No. 5 or internal-mix nozzle, Spraying Systems Co., Setup No. 42.

Calciner Blowback Filters

Type - A total of 15 ft^2 of sintered powder metal (316L SST) filter surface area.

Total Gas Flow to Filters at 350 °C, cfm - Based on total non-condensible gas flow as air corrected for temperature, plus the total condensible gas flow from feed and other condensibles treated as steam at 350 °C.

Filter Face Velocity (at 350 °C), ft/min - Total gas flow to filters divided by the total filter surface area.

Filter De-entrainment Factor for Particulates - Based on ^{144}Ce-Pr as determined from total amount fed to calciner over the total amount gained in the auxiliary equipment, primarily in the evaporator bottoms.

Calciner

Internal Temperature, °C - The temperatures measured near the dry chamber wall.

Melter

Average Volume, liters - Average batch volume determined from total volume of product and total number of batches during run. For continuous operation the melter volume below the weir overflow level is used.

Production Rate, liters/hr - Average value determined from total product volume and total feed time.

Residence Time, hr - Average value determined from average melter volume and average melter production rate.

Drain-Freeze Valve - A drain tube which is sealed by freezing melt and opened by remelting frozen melt in the tube (see Section 4.6 this report).

Weir Temperature, °C - Average temperature within one inch of the external weir tube exit (see Section 4.6 this report).

Furnace Power, kW - Average power consumption during total feed time.

Internal Melt Temperature, °C - Maximum temperature of melt measured near the bottom of the melter

Product Receiver

Depth of Solidified Waste in Receiver, in. - Depth of solidified waste in receiver as measured by probing (rodding) the receiver at the end of the run.

Leakage, atm-cm^3/sec - Volume of air leaking into a sealed, evacuated receiver as determined by a helium leak check using a mass spectrometer type leak detector in the evacuation line,

Product

Bulk Density, kg/liter - Net weight of solidified waste from in-cell pot weights divided by total product volume.

Measured Density, kg/liter - Laboratory measurement of grab sample from product taken as melt flowed from melter into the pot receiver.

Melting Point, °C - Values reported from in-cell crucible test with actual radioactive sample prior to each run. Values reported are usually the temperature at which the waste initially forms a fluid melt.

Adjusted Feed to Solid Volume Ratio - Concentration factor from liquid feed to volume of solid in receiver.

Waste to Solid Volume Ratio - Concentration factor from feed at 378 liters/tonne to volume of solid in receiver.

Equivalent Waste, tonne - Equivalent metric tons (tonnes) of 20,000 MWd/tonne at 15 MW/tonne power reactor fuel from which the solidified waste would be derived.

Unit Volume, liters/tonne - The volume of solidified waste produced from the processing of one tonne of equivalent waste.

Fission Product Heat in Pot, W - Rate of internal heat generation in receiver from radioactive decay, based on either feed analyses (curies/liter converted to W/liter) and total feed processed or on pot calorimetry measurements after filling. The two methods usually agree within the 10 percent accuracy limit of either method.

Total Radioactivity in Pot, Ci - Based on feed data. The solidified waste grab samples could not be completely dissolved for an accurate analysis.

Total Radioruthenium in Pot, Ci - Based on feed data less the total radioruthenium found in solidifier aqueous effluents.

Equivalent Age of Waste, yr - Age of waste from 20,000 MWd/tonne at 15 MW/tonne power reactor fuel to produce the same fission product heat (watts) as in the WSEP receiver (but not necessarily the same number of curies).

Centerline Temperature, °C - Average steady-state receiver centerline temperature (usually average for Zones 3, 4, and 5).

Centerline-to-Wall AT, °C - Average temperature difference between the centerline and outside of the wall of the receiver with the receiver temperatures at steady state in a furnace or in air or in water.

Effective Thermal Conductivity, K_e, W/(m^2 °C/m) - Based on average pot temperature data and heat generation rate from pot calorimetry measurements. Values were obtained using the equation $\Delta T = Q/4\pi L K_e$ discussed in Section 6.0 of this report.

Radiation Reading at 6 in., R/hr - Maximum radiation dose rate from pot. Detected with unshielded ionization chamber held 6 inches from pot wall.

			SS-1	SS-2	SS-3	SS-4	SS-5	SS-6
Feed to Spray Calciner (TK-114)	Volume (Sp. Gr.)	Initial., liters (kg/liter)	873 (1.32)	910 (1.32)	1076 (1.27)	560 (1.30)	984 (1.33)	1102 (1.29)
		Final, liters (kg/liter)	270 (1.32)	121 (1.32)	703 (1.27)	75 (1.28)	96 (1.33)	114 (1.29)
	Net Change	Volume, liters	-603	-789	-373	-485	-888	-988
		Weight, kg	-795	-1045	-476	-632	-1179	-1278
		Na, kg	-8.41	-6.00	-4.86	-7.67	-11.60	-9.82
		Fe, kg	-26.6	-34.8	-5.34	-7.52	-31.53	-31.88
		Al, kg	-0.96	-1.26	-1.90	-2.74	-3.86	-2.03
		P, kg	-27.7	-36.2	-11.6	-16.5	-38.97	-44.19
		S, kg	---	---	-6.46[b]	-9.41[b]	-0.678	---
		N, kg	-42.8	-58.8	-21.5	-33.0	-69.3	-66
		Ru, gm	-203	-165	-108	-65.9	-91.2	-282.2
Evaporator (TK-113)	Volume (Sp. Gr.)	Initial, liters (kg/liter)	198 (1.00)	349 (1.05)	365 (1.02)	350 (1.06)	236 (1.09)	529 (1.05)
		Final, liters (kg/liter)	156 (1.09)	237 (1.05)	220 (1.07)	259 (1.10)	424 (1.04)	378 (1.03)
	Net Change	Volume, liters	-42	-112	-145	-91	188	-151
		Weight, kg	-28	-117	-136	-89	182	-165
		Na, Kg	0.015	0.59	0.66	1.46[c]	<0.1	0.013
		Fe, kg	0.041	NA	NA	<0.03	NA	NA
		P, kg	NA[i]	NA	2.2	<0.02	0.17	0.009
		S, kg	NA	NA	0.65	<0.02	NA	---
		N, kg	5.9	-6	3.4	2.0	5.1	-5.1
		Ru, gm	94	94	16	4.4	76.5	226
Fractionator (TK-115)	Volume (Sp. Gr.)	Initial, liters (kg/liter)	401 (1.24)	276 (1.30)	311 (1.17)	513 (1.16)	515 (1.13)	558 (1.17)
		Final, liters (kg/liter)	705 (1.24)	708 (1.30)	863 (1.14)	554 (1.18)	647 (1.19)	791 (1.18)
	Net Change	Volume, liters	304	432	552	41	132	233
		Weight, kg	377	562	617	58	188	282
		S, kg	NA	NA	0.04	0.01	0.022	---
		N, kg	32	50	33.9	21	45.5	51.6
		Ru, gm	<20	0	<4	NA	<0.5	<2
Fractionator Distillate (TK-116)	Volume (Sp. Gr.)	Initial, liters (kg/liter)	186 (1.00)	210 (1.00)	189 (1.00)	219 (1.00)	221 (1.00)	216 (1.00)
		Final, liters (kg/liter)	438 (1.00)	893 (1.00)	741 (1.00)	516 (1.00)	446 (1.00)	2023 (1.00)
	Net Change	Volume, liters	252	677	552	297	225	1807
		Weight, kg	252	677	552	297	225	1807
		N, kg	NA	0.7	0.5	0.3	0.3	2.20
		Ru, gm	NA	0	NA	<0.5	NA	<4
Scrubber (TK-118)	Volume (Sp. Gr.)	Initial, liters (kg/liter)	474 (1.08)	478 (1.08)	371 (1.06)	420 (1.05)	466 (1.08)	392 (1.08)
		Final, liters (kg/liter)	360 (1.08)	270 (1.08)	311 (1.14)	336 (1.07)	478 (1.08)	358 (1.11)
	Net Change	Volume, liters	-114	-208	-60	-84	12	-34
		Weight, kg	-123	-220	-39	-81	12	-25
		S, kg	NA	NA	NA	<0.1	0.017	NA
		N, kg	8.6	3.3	5.4	7.4	12.3	13.3
		Ru, gm	NA	NA	NA	<0.1	<0.1	<1
solids Addition to Melter[d]	Net Change	Volume, liters	∿6[e]	0	-10	-16.3	0	∿3.5[e]
		Weight, kg	∿20[e]	0	-25.4	-40.4	0	∿12[e]
		Na, kg	---	---	-5.7	-9.1	---	---
		P, kg	---	---	-7.7	-12.3	---	---
Product	Net Change	Volume, liters	∿38[f]	48	39	56	66	65
		Weight, kg	∿120[f]	152	104	160	209	207
		Na, kg	8.4	4.4	10.9	14.79	8.78	10.4
		Fe, kg	22.8	NA	5.0	9.86	31.5	31.0
		Al, kg	0.5	NA	3.5	6.6	6.17	NA
		P, kg	20.4	27.5	16.4	22.7	29.2	34.7
		S, kg	NA	---	3.3	10.4	0.623	---
		N, kg	<0.01	<0.01	0.04	0.02	0.04	0.07
		Ru, gm	8.8	<9	<10	<10	<20	6.2
Solidifier Seal Tank (TK-117)	Volume (Sp. Gr.)	Initial, liters (kg/liter)	672 (1.00)	86 (1.00)	NA	519 (1.00)	386 (1.00)	380 (1.00)
		Final, liters (kg/liter)	718 (1.00)	1184 (1.07)	NA	537 (1.00)	397 (1.00)	380 (1.00)
	Net Change	Volume, liters	46	1098	∿0	18	11	0
		Weight, kg	46	1181	∿0	18	11	0
		Na, kg	---	0.02	---	---	---	---
		Fe, kg	---	<0.01	---	---	---	---
		N, kg	---	36	---	---	---	---
		Ru, gm	---	166	---	---	---	---
Head Tanks (Chemical Additions)	Net Change	Volume, liters	-84	-1173[g]	-992	0	0	-1052
		Weight, kg	-85	-1259[g]	-1058	0	0	-1054
		Sugar, g-moles	-4.7	-12	0	0	0	-16.6
		N, kg	0	-31[g]	-25.2	0	0	0
		Na, kg	0	-1.4[g]	0	0	0	0
		Ru, gm	0	73[g]	0	0	0	0
Net Change		Volume, liters	-203	-27	-437	-264	-307	-120
		Weight, kg	-236	-69	-461	-309	-450	-226
		Na, kg	0.05	-2.3	1.0	-2.0	-2.8	0.6
		Fe, kg	-3.76	NA	-0.3	2.4	0	-0.9
		Al, kg	-0.46	NA	1.6	3.9	2.3	NA
		P, kg	-7.3	-8.7	-0.7	-6.1	9.6	-9.5
		S, kg	---	---	-2.5	1.1	-0.02	---
		N, kg	3.7	-5.8	-3.4	-2.3	-6.1	-3.9
		Ru, gm	-80	30	-78	-51	<6	-43
Percent Recovery[h]		Volume, liters	93	98	87	90	91	95
		Weight, kg	93	98	88	90	89	95
		Na, kg	100	68	109	88	76	106
		Fe, kg	86	NA	94	132	100	97
		Al, kg	52	NA	184	241	160	NA
		P, kg	74	76	96	79	75	78
		S, kg	---	---	62	112	98	---
		N, kg	109	94	93	93	91	94
		Ru, gm	60	113	<28	<23	106	85

a. Elemental material balances are based on analysis of samples taken from each process tank over a total sampling period from 2 to 4 hours (i.e. only one tank is sampled at a time). Volume and weight balances are based on measurements made for all process tanks 1 hour before and after each run. Sulfate in feed is based on known quantity added during feed makeup due to inability to accurately analyze for sulfate in high rare earth salt solutions.
c. Not included in sodium material balance. High sodium due to residual solids from Run SS-3 which were flushed from the solidifier vent lines during first few hours of Run SS-4.
d. Solid sodium metaphosphate, $NaPO_3$, added to melter during Runs SS-3 and SS-4.
e. Not included in material balances. Estimated amount of calcine retained in calciner following the run and not transferred to receiver pot.
f. Estimated values based on performance data from nonradioactive tests. Values do not include about 4 liters of nonradioactive spray solidified PW-1 waste produced during prerun equipment test and do not include about 13 liters (about 59 kg) of radioactive cell waste stored in product receiver prior to Run SS-1.
g. Includes 979 liters (1048 kg) of solidifier condensate from Run PC-3 which was stored in the in-cell head tank TK-112 for addition to the auxiliary evaporator (TK-113) during Run SS-2 (see Figure 9.2).
h. Poor elemental recoveries are due primarily to inability to completely dissolve the product sample for an accurate chemical analysis.
i. NA = Not Available.

TABLE 9.3. Material Balances for Spray Solidification Runs SS-1 Through SS-6[a]

TABLE 9.4. Distribution of Radioactivity for Spray Solidification Runs SS-1 Through SS-6

Process Vessel	Radionuclides[a]	Fraction of Total Radioactivity Fed to Solidifier During Run					
		SS-1	SS-2[b]	SS-3	SS-4	SS-5	SS-6
Process Condensate, TK-113, 10^{-3}	Ru	750	NA[c]	710[d]	110	700	540
	Ce	0.53	NA	100[e]	1.4	0.64	0.71
	Cs	0.13	NA	120[e]	14	1.8	4.6
	Zr	1	NA	NA	3.4	NA	2.9
	Sr	NA	NA	NA	NA	NA	0.75
	T-Ru	0.54	NA	100[e]	1.4	0.64	0.72
Fractionator, TK-115, 10^{-7}	Ru	8200	40,000	24,000	14,000	64,000	65,000
	Ce	<10	63	40	9.6	4.8	7.9
	Cs	20	NA	82	110	NA	5.9
	Zr	<2	660	NA	17	NA	NA
	T-Ru	<10	63	40	9.6	4.8	7.9
Fractionator Distillate, TK-116, 10^{-9}	Ru	390	3000	8,000	27,000	60,000	20,000
	Ce	630	2.4	31	3.5	0.3	6.2
	Cs	78	32	52	39	60,000	NA
	Zr	30	NA	NA	NA	NA	NA
	T-Ru	64	2.4	31	3.5	0.3	7.0
Process Condensate (Mode B Modified),[f] TK-117, 10^{-3}	Ru	---	770	---	---	---	---
	Ce	---	0.16	---	---	---	---
	Cs	---	0.63	---	---	---	---
	Zr	---	0.31	---	---	---	---
	T-Ru	---	0.16	---	---	---	---
Scrubber, TK-118, 10^{-9}	Ru	320	2500	25,000	36,000	85,000	36,000
	Ce	290	<1	22	68	17	5.7
	Cs	13	NA	NA	110	NA	12
	Zr	82	NA	NA	NA	NA	NA
	T-Ru	290	<1	22	68	17	5.7
Stack Off-Gas, 10^{-12}	Ru	<1000	<880	<100	<210	<300	<100
	T-Ru[g]	10	3.6	11	<1.2	<0.9	<0.6
Ratio of Radioactivity in Fractionator Distillate to 10CFR20 Limits	Ru	16	45	37,000	140,000	180,000	22,000
	T-Ru[h]	140	1.5	940	870	1100	510
Ratio of Radioactivity in Process Off-Gases to 10CFR20 Limits, 10^{-4}	Ru	150	<71	<4	<4	<4	<4
	T-Ru[i]	16	15	37	<16	<21	<16

a. Radionuclides are Ru = ^{106}Ru-Rh, Ce = ^{144}Ce-Pr, Cs = ^{137}Cs, Zr = ^{95}Zr-Nb, and Sr = ^{90}Sr. T-Ru is total radioactivity less the ^{106}Ru-Rh radioactivity and represents the total nonvolatile radioactivity.

b. All data based on radioactivity in feed only and does not include radioactivity in process condensate from Run PC-3 which was added to the auxiliary evaporator from the in-cell feed tank (TK-112) during Run SS-2.

c. NA = Not Available. Samples taken from the auxiliary evaporator (TK-113) were contaminated throughout Run SS-2 due to inadequate sampling techniques.

d. Does not include radioactivity due to high calcine entrainment from broken calciner filters.

e. High values caused by high calcine entrainment to auxiliary evaporator from broken calciner filters.

f. Solidifier condensate was accumulated in a separate catch tank (TK-117) during Run SS-2 only (see Figure 9.21.

g. T-Ru value based on total beta reading for stack gas filter sample during operating week and total ^{144}Ce-Pr in feed to solidifier (see Figure 9.5).

h. Nonvolatiles (T-Ru) are represented by ^{144}Ce-Pr.

i. T-Ru value based on 10CFR20 limits for ^{90}Sr in air and total beta reading for stack gas filler sample during operating week. (See Figure 9.5).

TABLE 9.5. Averaqe Centerline Temperature in the First Six Spray Solidification Pots

Run No.	Waste Type	Pot Diam., in.	Air-Cooled Furnace[a] Average $T_{\mathbb{C}}$, °C	σ,[c] ±°C	$T_{\mathbb{C}}$ Data for Zones No:	In Ambient Air[a] Average $T_{\mathbb{C}}$, °C	σ,[c] ±°C	$T_{\mathbb{C}}$ Data for Zones No:
SS-1[b]	PW-1	12	192	---	5	NA	---	NA
SS-2	PW-1	8	287	8	3,4,5	NA	---	NA
SS-3	PW-2	8	312	---	5	NA	---	NA
SS-4	PW-2	8	508	4	4,5	NA	---	NA
SS-5	PW-1	8	640	13	2,3,4,5	595	14	2,3,4,5
SS-6	PW-1	8	734	9	2,3,4,5	709	15	2,3,4,5

a. Temperature data used only for pot zones with about two pot diameters of solid waste above and below the thermocouple position, and the temperature data for zone six (about 6 inches above bottom of pot] was not used due to end effects.
b. The level of the solid waste in the pot was about 5 inches above the centerline thermocouple position of zone 5.
c. Standard deviation for average of zone temperature data.

TABLE 9.6. Average Wall Temperatures for the First Six Spray Solidified Waste Pots

Run No.	Waste Type	Pot Diam., in.	Air-Cooled Furnace[a] Average T_W, °C	σ,[c] ±°C	T_W Data for Zones No:	In Ambient Air[a] Average T_W, °C	σ,[c] ±°C	T_W Data for Zones No:
SS-1[b]	PW-1	12	160	---	5	NA	---	NA
SS-2	PW-1	8	218	8	3,4,5	NA	---	NA
SS-3	PW-2	8	233	---	5	NA	---	NA
SS-4	PW-2	8	287	3	2,4,5	NA	---	NA
SS-5	PW-1	8	370	4	2,3,4,5	319	3	1,2,3,4,5
SS-6	PW-1	8	429	9	2,3,4,5	373	2	2,3,4,5

a. Temperature data used only for pot zones with about two pot diameters of solid waste above the thermocouple position and the temperature data for Zone 6 (about 6 inches above bottom of pot) was not used due to end effects.
b. The level of the solid waste in the pot was about 5 inches above the centerline (position of thermocouples) of Zone 5.
c. Standard deviation for data available from zones used.

TABLE 9.7 Average Centerline-to-Wall Temperature Differences for the First Six Spray Solidified Pots

			Air-Cooled Furnace[a]			In Ambient Air[a]		
Run No.	Waste Type	Pot Diam., in.	Average ΔT, °C	σ,[c] ±°C	ΔT Data for Zones No:	Average ΔT, °C	σ,[c] ±°C	ΔT Data for Zones No:[a]
SS-1[b]	PW-1	12	32	---	5	NA	---	NA
SS-2	PW-1	8	69	8	3,4,5	NA	---	NA
SS-3	PW-2	8	79	---	5	NA	---	NA
SS-4	PW-2	8	221	4	4,5	NA	---	NA
SS-5	PW-1	8	270	13	2,3,4,5	276	14	2,3,4,5
SS-6	PW-1	8	305	9	2,3,4,5	336	15	2,3,4,5

a. Temperature data (p ɑ centerline-to-wall ΔT) ωseɑ only for pot zones with about two pot diameters o f∃olid waste above the thɑrmocouple position and the temperature data for Z nɑ 6 (about 6 inches abɑvɑ bottom of pot) owas not used due to end effects.
b. The level of the so 1ɑ waste in the pot was about 5 inches ɑ> ve the centerline of Zone 5.
c. Standard deviation ɑr ΔT data used.

TABLE 9.8. Feed Pump Experience During WSEP Demonstration Runs[a]

Pump No.[b]	Service Runs	Feed Type	Hours	Date	Remarks
P-3	RLG-2	PW-1	29	8-22-66	Installed on feed tank
P-3	PC-1	PW-2	44	2-03-67	Connector was corroded away (sampler leaked on connector clamp)
P-3	SS-1	PW-1	37	1-04-67	
P-3	CSCM10	PW-2	15	---	
P-3	SS-2	PW-1	57	3-30-67	Repaired reinstalled on feed tank
P-3	PC-6 (Part I)	PW-2	23	8-22-67	Pump shaft froze during PC-6.
		Total:	205		
P-11	SS-3	PW-2	36	7-7-68	New pump installed prior to SS-3.
		Total:	36		
P-12	SS-4	PW-2	42	9-12-68	New pump installed prior to SS-4.
P-12	SS-5	PW-1	45	10-16-68	Same pump used as for SS-4
P-12	SS-6	PW	77	11-4-68	Same pump used as for SS-4 and 5 and will continue to be used for SS-7 and 8
		Total:	164		

a. Additional pump experience reported in Waste Solidification Program, Volumes 4 and 5.

b. Pump P-3 is Chempump; Pumps P-11 and P-12 are Deanline made by Dean Brothers Pumps, Inc.

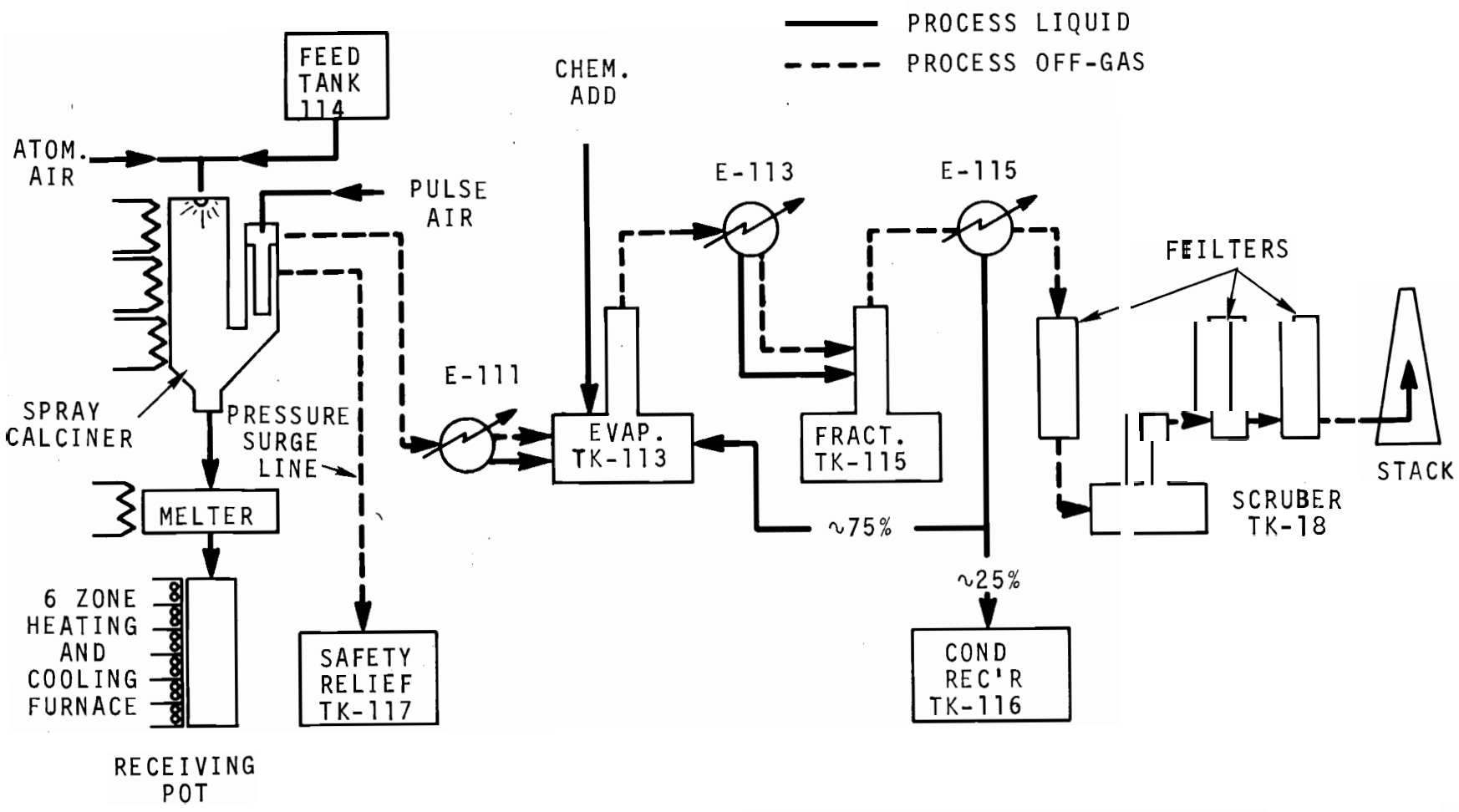

ARRANGEMENT FOR RUNS SS-1, 3, 4, 5, AND 6

FIGURE 9.1 Equipment Arrangement for Mode A Spray Solidification Runs

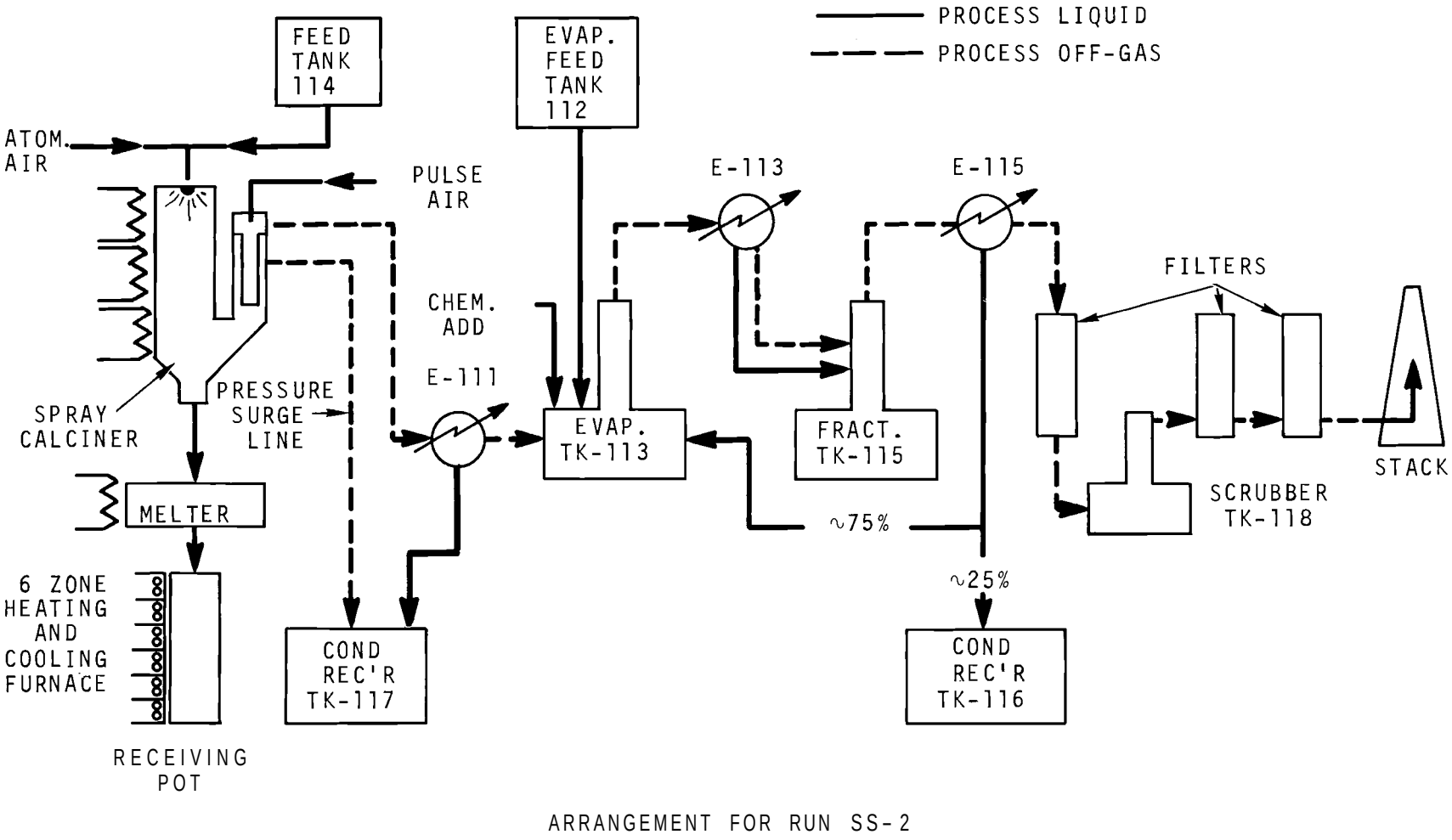

ARRANGEMENT FOR RUN SS-2

FIGURE 9.2. Equipment Arrangement for Modified Mode B Spray Solidification Runs

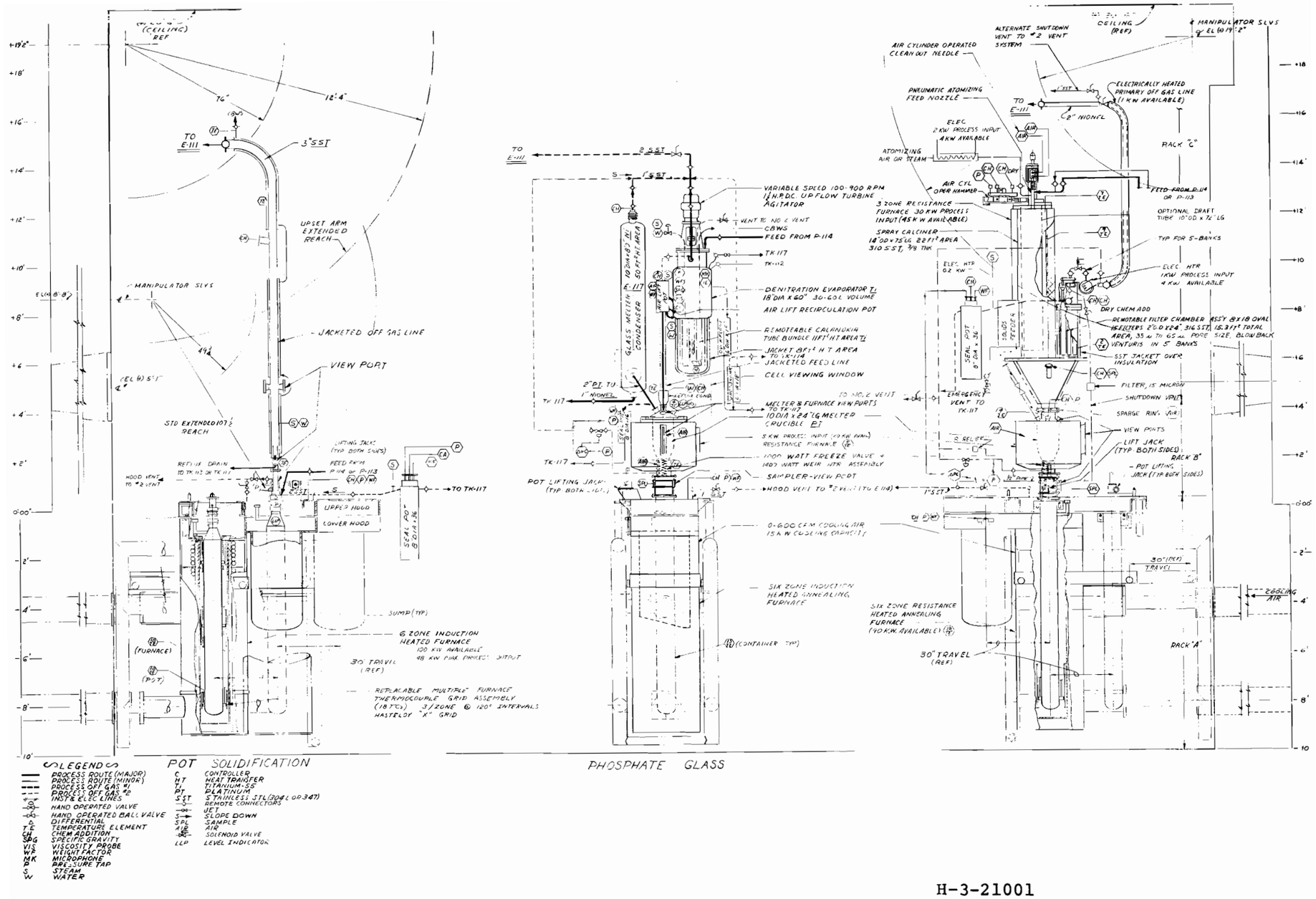

FIGURE 9.3. WSEP Auxiliary Equipment Flow Diagram

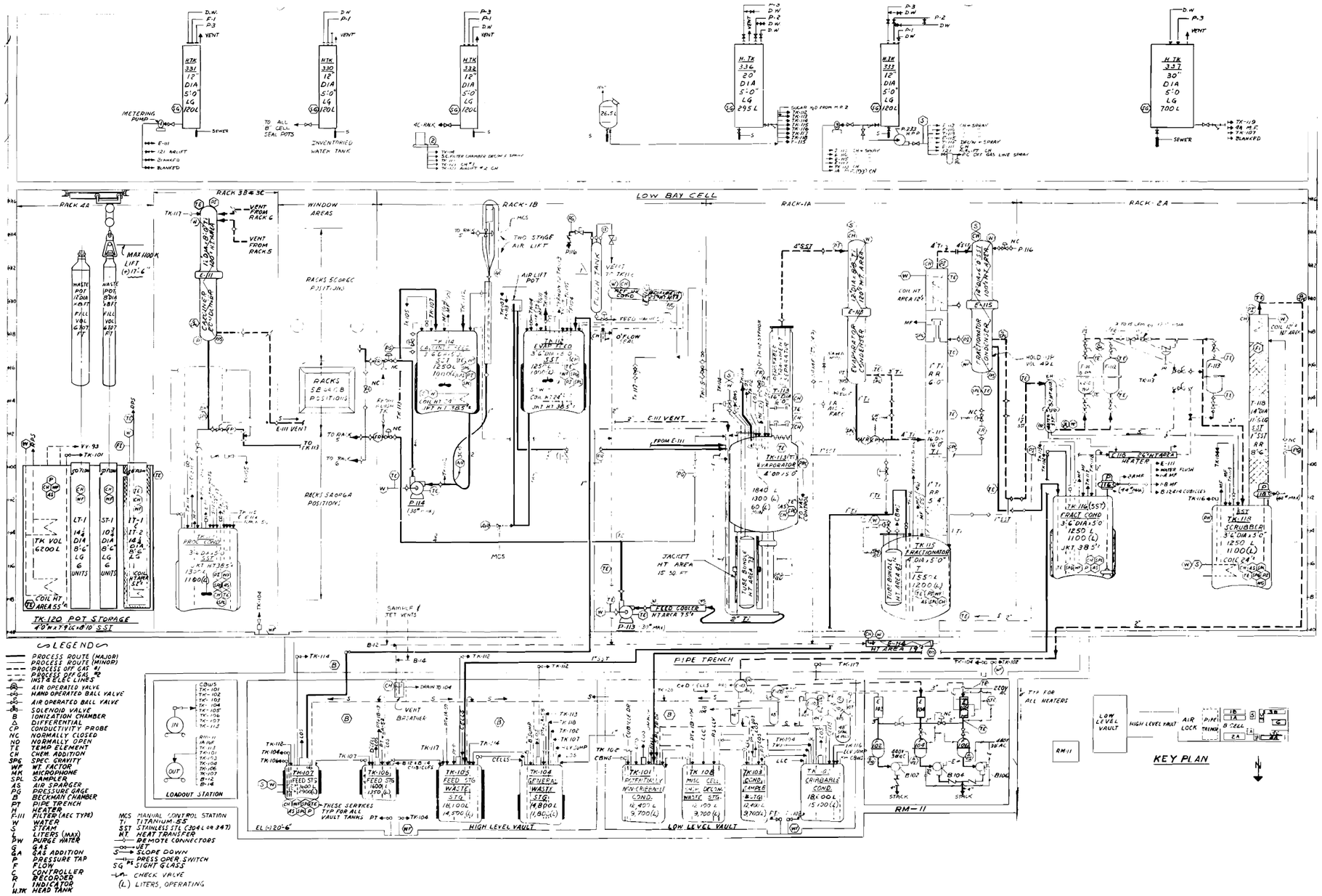

X-3-21001

FIGURE 9.4. WSEP Solidification Equipment Flow Diagram

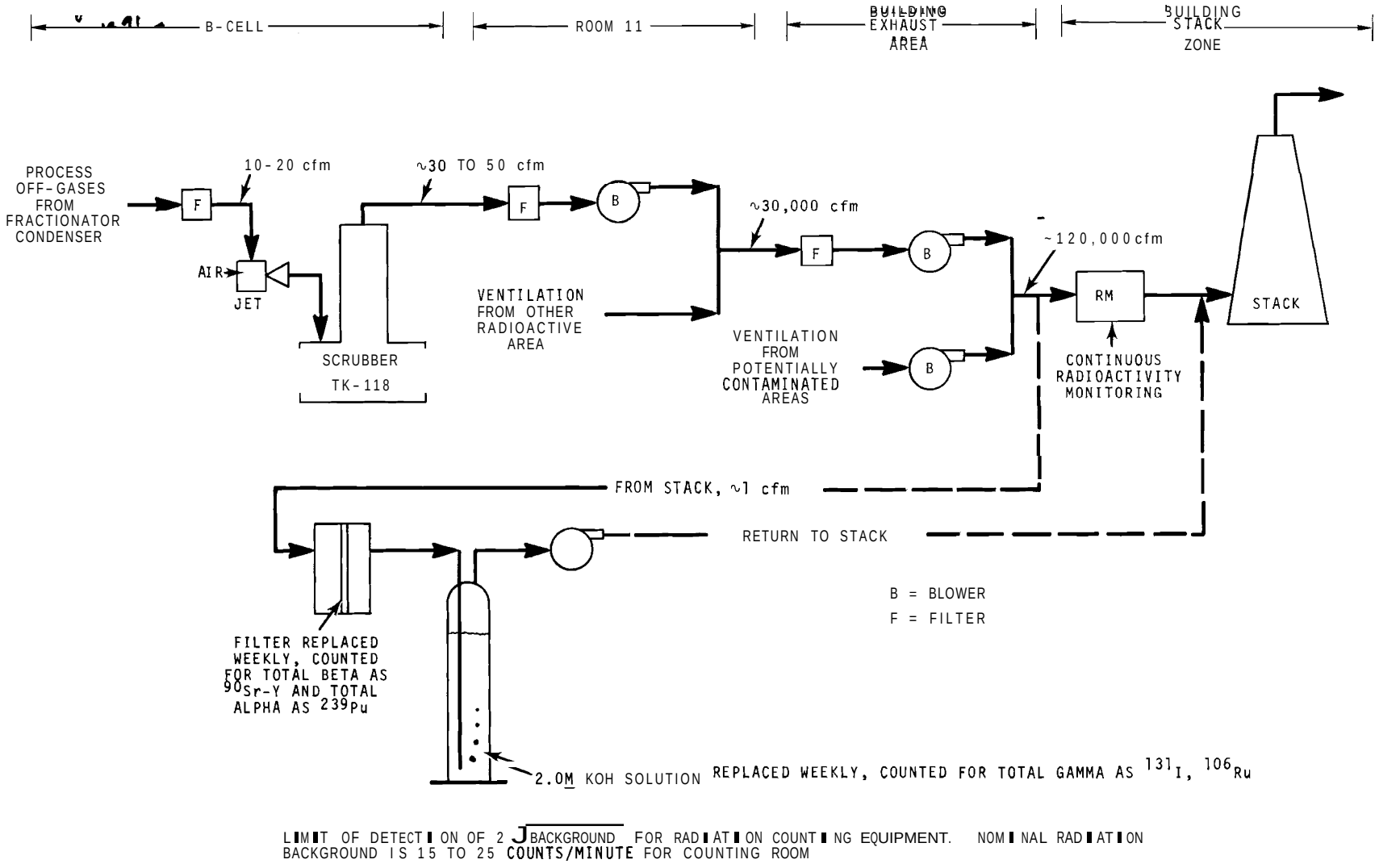

FIGURE 9.5. Schematic Diagram of Ventilation System for Process Off-Gases (Also-see Figure 5.1.)

10.0 ACKNOWLEDGEMENTS

Successful demonstrations of six radioactive spray solidification runs were possible only through the excellent cooperative efforts of the staff of the U.S. Atomic Energy Commission and the Pacific Northwest Laboratory. Preliminary work for the demonstrations was begun in 1962 and has involved the contribution of too many people to be specifically acknowledged here. In particular, the efforts of the technicians and other staff members who conducted the work are sincerely appreciated. The principal participants who so generously contributed to the successful efforts were:

BNW

A. G. Blasewitz
C. R. Cooley
R. D. Dierks
G. V. Fitzpatrick
V. L. Hammond
B. O. Kahle
J. D. Kaser
V. P. Kelly
M. G. Krisher
A. C. Leaf
L. Lust
J. D. Moore
F. L. Mourich
T. J. Owen
A. M. Platt
R. E. Pohto
M. O. Rankin
G. Rey
C. E. Saari
E. L. Shimoda
D. H. Siemens
J. S. Wallner

AEC

C. B. Bartlett
W. G. Belter
W. H. Regan
I. C. Roberts
A. D. Toth

DISTRIBUTION

No. of Copies	
	OFFSITE
1	AEC Chicago Patent Group G. H. Lee
1	AEC Dayton Area Office P. O. Box 66 Miamisburg, Ohio, 45342 E. A. Walker, Chief Operations Branch
174	AEC Division of Technical Information Extension
2	AEC Division of Materials Licensing 4915 St. Elmo Avenue Bethesda, Maryland 20014 John A. McBride P. B. Chitwood
1	AEC Division of Naval Reactors M. E. Miles
1	AEC Division of Operational Safety Mail Stop P.930 Alex F. Perge
1	AEC Division of Production W. L. Lennemann, Chief
5	AEC Division of Reactor Development and Technology Asst. Dir. for Nuclear Safety Chief, Environmental and Sanitary Eng. Br. C. B. Bartlett Chief, Fuel Recycle Br. W. H. Regan
4	AEC Idaho Operations Office P. O. Box 2108 Idaho Falls, Idaho 83401 K. K. Kennedy B. L. Schmalz

No. of Copies	
3	Allied-Gulf Nuclear Services Nuclear Fuels Department P. O. Box 35 Florham Park, New Jersey 07932 R. L. Newman A. Schneider J. J. Shefcik
3	Argonne National Laboratory S. Lawroski J. Loeding R. C. Vogel
1	Argonne National Laboratory P. O. Box 2528 Idaho Falls, Idaho 83401 P. Fineman
4	Atomic Energy of Canada Limited Chalk River Nuclear Laboratories Scientific Document Distribution Office Chalk River, Ontario, Canada
2	Atomic Energy Research Establishment Harwell, Didcot, Berks, England K. D. B. Johnson Dr. J. B. Lewis
2	AAEC Research Establishment The Director Private Mail Bag Sutherland, NSW 2232 Australia L. H. Keher P. A. Bonhote
1	Bhabha Atomic Research Centre Head, Waste Treatment Division Apollo Pier Road, Bombay - 1 K. T. Thomas
1	Bhabha Atomic Research Centre Organic Waste Laboratory Plutonium Plant Site Trombay, Bombay, India Keshava Chandra

No. of Copies	
1	Bhabha Atomic Research Centre Scientific Officer (C), Waste Treatment Division, Engineering Hall No. 5, Trombay, Bombay - 85 N. S. Sunder Rajan
1	Brookhaven National Laboratory Central Library
1	CEA-CHC Boite Postale No. 510 Paris 15, France F. Dumahel
4	Centre de Marcoule B.P. 106 30 - Bagnols S/Ceze France Mrs. R. Bonniaud C. J. Jouannaud F. Laude C. Sembret
2	Centre d Etudes Nucleaires de Fontenay-aux-Roses Boite Postale 6 92 - Fontenay-aux-Roses, France M. J. Pomerola P. J. Regnaut
1	Centre d Etudes Nucleaires de Saclay Service des Produits de Fission Boite Postale No. 2 91 Gif/Yvette, France Andre J. Raggenbass
1	Commission of the European Communities General Directorate XV 200 rue de la Loi 1040 Brussels Belgium Dr. P. Kruys

No. of Copies	
1	Dow Chemical Company (AEC) D. L. Ziegler
6	duPont Company, Aiken (AEC) R. M. Girdler C. H. Ice L. H. Meyer C. M. Patterson E. B. Sheldon D. S. Webster
1	duPont Company, Wilmington (AEC) J. R. Thayer
3	European Institute for Transuranium Elements P. O. Box 2266 75 Karlsruhe/W. Germany Birgit Seufert
1	European Nuclear Energy Agency 38 Boulevard Suchet Paris 16, France I. G. K. Williams, Deputy Director
1	French Atomic Energy Commission Cadarache Boite Postale No. 1 13 - Saint-Paul-Lez-Durance (France) P. E. Pottier
1	General Electric Company 175 Curtner Avenue (M/C 160) San Jose, California 95125 R. G. Barnes
1	General Electric Co. Midwest Fuel Recovery Plant Route 1, Box 219-B Morris, Illinois 60450 S. G. Smolen
2	General Electric Company Vallecitos Nuclear Center Vallecitos Road Pleasanton, California 94566 Dr. W. H. Reas

No. of Copies	
2	Gesellschaft fur Strahlenforschung mbH München 3392 Clausthal-Zellerfeld Bornhardstrasze 22 Germany Prof. Dr. H. Borchert Dr. I. K. Kühn
1	Harvard School of Public Health 665 Huntington Ave. Boston, Massachusetts 02115 Dade W. Moeller
1	Hitachi Works, Hitachi Ltd. Nuclear Power Plant Dept. 1-1 Saiwai-cho 3-chome Hitachi-shi, Ibaraki Ken 317 Japan A. Shimozato
3	Idaho Nuclear Corporation P. O. Box 1845 Idaho Falls, Idaho 83401 G. O. Bright J. A. Buckham B. R. Wheeler
1	Illinois State Geological Survey Division Urbana, Illinois 61801 J. C. Frye, Chief
1	Jersey Enterprises, Inc. Joseph Building Richland, Washington L. B. Torobin
1	The John Hopkins University 209 Ames Hall Baltimore, Maryland 21218 Dr. A. Wolman

No. of Copies	
1	Junta de Energia Nuclear Division de Materiales Ciudad Universitaria Madrid-3 Spain Dr. Leandros Ramos
1	Kansas State Dept. of Health Environmental Health Division Topeka, Kansas 66612 Robert C. Will
1	KFA - Julich Abteilung Dekontamination 517 Julich 1 P. O. Box 365 Fed. Rep. of Germany Dr. K. H. Rattay
1	Lawrence Radiation Laboratory, Berkeley (AEC) Technical Information Division Library
1	Lawrence Radiation Laboratory, Livermore (AEC) Technical Information Division Library
1	Los Alamos Scientific Laboratory (AEC) C. W. Christenson
3	Ministry of Education & Research 53 Bonn Heussallee 2-10 Germany (Fed. Rep.) Dr. J. Mehl
2	Mound Laboratory (AEC) S. Freeman J. J. Goldin
1	MPR Associates, Inc. 1140 Connecticut Ave. N.W. Washington, D.C. 20036 Librarian
1	National Lead Company 111 Broadway New York, New York 10006 Stephen Brown

No. of Copies	
1	National Academy of Sciences Committee on Radioactive Waste Management National Research Council 2101 Constitution Avenue Washington, D.C. 20418 Dr. Cyrus Klingsberg, Tech. Secretary
1	NYS Atomic & Space Development Authority 230 Park Ave., Rm 2425 New York, N. Y. 10017 J. G. Cline, General Manager
2	Nuclear Fuel Services, Inc. P. O. Box 124 West Valley, N. Y. 14171 J. P. Duckworth
1	Nuclear Research Center Waste Management Dept. D 75 Karlsruhe Weberstr. 5 Germany Dr. H. Krouse
1	Nuclear Safety Associates 1055-R Rockville Pike Rockville, Maryland 20852 W. A. Rodger
1	Nurnec Apollo, Penn. 15613 R. F. Duda
4	Oak Ridge National Laboratory (AEC) Central Research Library, Document Reference Sect. Central Research Library, ORNL Laboratory Records Dept., ORNL Laboratory Records Dept., ORNL-RC

No. of Copies	
2	Radiation Protection Dept. Luisenstrasse 46, Bad Godesberg, West Germany H. M. Holtzem G. Straimer
1	Dr. H. F. Ramdohr c/o Friedrich Uhde GmbH 10-12, Deggingstraze 46 Dortmund Germany
3	Studiecentrum voor Kernenergie, SCK, CEN Boeretang, 200, 2400 Mol. Belgium Dr. L. Baetsle Dr. P. Dejonghe Library
2	Tokai Works Power Reactor and Nuclear Fuel Development Corp. Tokai-Mura, Ibaraiki-Ken, Japan M. Ichikawa Library
8	Union Carbide Corporation (ORNL) P. S. Baker R. E. Blanco J. O. Blomeke W. C. Clark F. M. Empson H. B. Godbee J. C. Suddath M. E. Whatley
1	United Kinqdom Atomic Energy Authority Risley, England D. W. Clelland
1	University of Arizona Tucson, Arizona 85721 E. S. Simpson, Professor of Hydrology

No. of Copies	
1	University of Minnesota Environmental Health Research and Training Center Room 1108, Mayo Memorial Hospital Minneapolis, Minnesota 55455 Dr. C. P. Straub
1	The University of Texas at Austin Engineering Laboratories Bldg. 307 Austin, Texas 78712 Dr. E. F. Gloyna
2	U. S. Bureau of Mines Washington, D.C. 20240 J. W. Watkins Dir., Petroleum Research
1	U.S. Geological Survey Washington, D.C. R. L. Nace
1	USDA National Agricultural Library Current Serial Record Beltsville, Maryland 20705
1	Vanderbilt University Box 1670, Stn. B Nashville, Tennessee P. A. Krenkel

ONSITE-HANFORD

1	AEC Chicago Patent Group R. K. Sharp (Richland)
6	AEC Richland Operations Office J. T. Christy O. J. Elgert (2) J. E. Goodwin C. L. Robinson W. E. Lotz
2	AEC RDT Site Rep., Richland P. G. Holsted A. D. Toth

No. of Copies	
2	Atlantic Richfield Company P. O. Box 370 Richland, Washington 99352 H. C. Rathvon L. L. Zahn
15	Atlantic Richfield Hanford Company M. H. Campbell J. B. Fecht W. M. Harty H. H. Hopkins R. E. Isaacson L. M. Knights W. P. McCue R. W. McCullough G. C. Oberg H. P. Shaw P. W. Smith R. E. Smith R. E. Tomlinson J. H. Warren File Copy
3	Battelle Memorial Institute
2	Douglas United Nuclear, Inc.
2	RDT Assistant Director for Pacific Northwest Programs
11	WADCO Corp. G. J. Alkire J. M. Atwood J. J. Cadwell C. R. Cooley F. J. Leitz R. L. Moore WADCO Document Control (5)

No. of Copies	
66	Battelle-Northwest
	A. G. Blasewitz (2)
	W. R. Bond (2)
	R. E. Burns
	D. R. de Halas
	G. M. Dalen
	V. L. Hammond
	J. N. Hartley
	M. M. Hendrickson
	R. K. Hilliard
	G. Jansen
	J. D. Kaser
	J. H. Kleinpeter
	J. L. McElroy (30)
	J. E. Mendel
	F. L. Mourich
	R. E. Nightingale
	H. M. Parker
	D. W. Pearce
	L. D. Perrigo
	A. M. Platt
	F. P. Roberts
	K. J. Schneider
	M. R. Schwab
	R. J. Thompson
	C. J. Touhill
	E. E. Voiland
	W. K. Winegardner
	N. G. Wittenbrock
	Technical Information Files (5)
	Technical Publications (2)