PNNL-11330
UC-630

RECEIVED
OCT 15 1996
OSTI

RAMS (Risk Analysis - Modular System) Methodology

R. D. Stenner
D. L. Strenge
J. W. Buck
D. E. Smith
M. K. White
L. M. Bagaasen
G. M. Gelston
B. L. Harper
B. L. Hoopes
K. R. Middleton
W. T. Farris

October 1996

Prepared for the U.S. Department of Energy
under Contract DE-AC06-76RLO 1830

Pacific Northwest National Laboratory
Operated for the U.S. Department of Energy
by Battelle

Battelle

MASTER

PNNL-11330

DISTRIBUTION OF THIS DOCUMENT IS UNLIMITED

DISCLAIMER

This report was prepared as an account of work sponsored by an agency of the United States Government. Neither the United States Government nor any agency thereof, nor Battelle Memorial Institute, nor any of their employees, makes **any warranty, express or implied, or assumes any legal liability or responsibility for the accuracy, completeness, or usefulness of any information, apparatus, product, or process disclosed, or represents that its use would not infringe privately owned rights.** Reference herein to any specific commercial product, process, or service by trade name, trademark, manufacturer, or otherwise does not necessarily constitute or imply its endorsement, recommendation, or favoring by the United States Government or any agency thereof, or Battelle Memorial Institute. The views and opinions of authors expressed herein do not necessarily state or reflect those of the United States Government or any agency thereof.

PACIFIC NORTHWEST NATIONAL LABORATORY
operated by
BATTELLE
for the
UNITED STATES DEPARTMENT OF ENERGY
under Contract DE-AC06-76RLO 1830

Printed in the United States of America

Available to DOE and DOE contractors from the Office of Scientific and Technical Information, P.O. Box 62, Oak Ridge, TN 37831; prices available from (615) 576-8401.

Available to the public from the National Technical Information Service, U.S. Department of Commerce, 5285 Port Royal Rd., Springfield, VA 22161

The document was printed on recycled paper.

DISCLAIMER

Portions of this document may be illegible in electronic image products. Images are produced from the best available original document.

PNL-11330
UC-630

RAMS (Risk Analysis - Modular System) Methodology

R. D. Stenner
D. L. Strenge
J. W. Buck
D. E. Smith
M. K. White
L. M. Bagaasen
G. M. Gelston
B. L. Harper
B. L. Hoopes
K. R. Middleton
W. T. Farris

October 1996

Prepared for
the U.S. Department of Energy
under Contract DE-AC06-76RLO 1830

Pacific Northwest Laboratory
Richland, Washington 99352

SUMMARY

The Risk Analysis - Modular System (RAMS) was developed to serve as a broad scope risk analysis tool for the Risk Assessment of the Hanford Mission (RAHM) studies. The RAHM element provides risk analysis support for Hanford Strategic Analysis and Mission Planning activities. The RAHM also provides risk analysis support for the Hanford 10-Year Plan development activities. The RAMS tool draws from a collection of specifically designed databases and modular risk analysis methodologies and models.

RAMS is a flexible modular system that can be focused on targeted risk analysis needs. It is specifically designed to address risks associated with overall strategy, technical alternative, and "what if" questions regarding the Hanford cleanup mission. RAMS is set up to address both near-term and long-term risk issues. Consistency is very important for any comparative risk analysis, and RAMS is designed to efficiently and consistently compare risks and produce risk reduction estimates (i.e., Δ-risk values). There is a wide range of output information that can be generated by RAMS. These outputs can be detailed by individual contaminants, waste forms, transport pathways, exposure scenarios, individuals, populations, etc. However, they can also be in rolled-up form to support high-level strategy decisions.

The RAMS was developed to coincide with current Hanford Strategic Analysis and Site Integration (i.e., site-wide system engineering integration) planning. That is, a large number of alternative strategies and "what-if questions" regarding potential strategies and/or specific technical alternatives can most efficiently be screened by first examining whether they meet final end-state requirements and conditions. If a specific strategy does not meet end-state requirements, it would either be adjusted to produce another alternative strategy to analyze or simply ruled out. It would not be cost-effective to perform the full range of interim process and end-state risk analyses on all potential alternative strategies, without first determining whether the potential strategies are even acceptable from an end-state perspective. The modular approach of RAMS can also be utilized to provide in-depth analyses of the interim process phase for selected alternative strategies that adequately meet end-state requirements. Interim process analyses will also require the assessment of worker risk (so the trade-off between public and worker risks can be incorporated into the decision process), ecosystem risk, cultural risk, and programmatic risk. All of these risk factors must then be coupled with cost and schedule information to fully assess each screened alternative strategy or elements of a strategy. It isalso important to understand how much risk is averted by the proposed treatment and/or movement of the waste from one area to another. The RAMS near-term risk modules provide a relatively fast and cost effective means of assessing these averted risks.

ACKNOWLEDGMENT

The authors wish to acknowledge and thank James L. Daily, II and the Department of Energy (DOE) - Planning and Integration Division (PID) for their sponsorship and support in the development of the RAMS tool.

Contents

1.0 Introduction 1.2
1.1 Modular Approach 1.2
1.2 RAMS Output Capability 1.4
1.3 Application For Strategic Analysis, Mission Planning, and Decision-Making 1.5

2.0 Near-term (Accident) Modular Methodology 2.1
2.1 Worker Health Impacts 2.2
2.1.1 Release Fraction Evaluation 2.2
2.1.2 Unit Transport Factor Evaluation 2.3
2.1.3 Unit Exposure Factors for Radionuclide Health Impacts 2.5
2.1.4 Unit Exposure Factors for Chemical Health Impacts 2.7
2.1.5 Implementation of Worker Impact Methodology 2.10
2.2 Co-located Worker and Public Health Impacts 2.10
2.2.1 Release Fraction Evaluation 2.10
2.2.3 Unit Exposure Factors 2.15
2.2.4 Implementation of Public Impact Methodology 2.16
2.3 Environmental Consequence Index - Near-term Criteria 2.19
2.3.1 Area-Specific Natural and Cultural Resources 2.20
2.3.2 Rationale for Selecting Distances by Geographic Area 2.21
2.3.3 Environmental Consequence Index 2.23

3.0 Long-term (Chronic) Modular Methodology 3.1
3.1 MRA Methodology 3.1
3.2 Environmental Consequence Analysis - Long-term Criteria 3.5

4.0 RAHM Database 4.1
4.1 Database Design 4.1
4.2 Acute Risk Component Description 4.1
4.3 Long-Term Risk Component Description 4.2
4.4 Acute Risk Database Content 4.2
4.5 Long-Term Database Content 4.2

5.0 Quality Assurance 5.1
5.1 Objectives of the QA Program 5.1
5.2 QA Approach 5.1
5.2.1 Quality Points 5.1
5.2.2 Quality Points for RAHM 5.2
5.3 QA Program Implementation 5.3
5.3.1 Training 5.3

5.3.2 Data Verification 5.3
5.3.3 Records of Assumption (ROAs) 5.3
5.3.4 Independent Technical Review (ITR) 5.3
5.3.5 Model Assessment 5.3

6.0 References 6.1

Figures

1.1 RAMS Structure 1.2
5.1 Information Flow and Quality Points 5.4

Tables

2.1 UEF Values for Radionuclides 2.5
2.2 UEF Values for Non-Carcinogenic Chemical Effects 2.6
2.3 UEF Values for Carcinogenic Chemicals 2.8
2.4 UTF Values for Radionuclides 2.11
2.5 UTF Values for Chemicals 2.14
2.6 Physical Forms For Chemicals 2.14
2.7 Dose Limits for EUZ Calculations 2.17
2.8 Chemical Concentration Criteria for EUZ Calculations 2.19
2.9 Distances from Sources to Nearest Probable Sensitive Resource
2.10 Low, Medium, and High Impact Radii by Area

1.0 Introduction

The Risk Analysis - Modular System (RAMS) was developed to serve as a broad scope risk analysis tool for the Risk Assessment of the Hanford Mission (RAHM) studies. The RAHM element provides risk analysis support for Hanford Strategic Analysis and Mission Planning activities. The RAHM also provides risk analysis support for the Hanford 10-Year Plan development activities. The RAMS tool draws from a collection of specifically designed databases and modular risk analysis methodologies and models.

1.1 Modular Approach

A systems approach to defining the necessary elements and obtaining the necessary input information is best for conducting a RAMS risk analysis for a specific cleanup strategy and/or technical alternative. The RAMS approach involves:

- defining the facilities/sites and processes associated with waste handling, processing, storage, and disposition
- determining the associated waste inventories by constituents and forms (i.e., both radiological and hazardous chemical)
- defining the environmental release process, release fractions and release probabilities
- identifying and defining interim- and/or end-state waste forms, release factors associated with these states, and waste locations
- generating and/or applying unit risk factors appropriate to the selected release, transport, and exposure scenarios
- generating and/or applying calculational routines to combine specific source term and unit risk factor data
- generating and/or applying output generation routines to produce necessary tables, graphs, and report information
- utilizing the RAHM database system to collect and manage the input information and results.

The approach divides these information elements into modules so they can be independently modified to allow for rapid and efficient recalculation of risks associated with different strategies and/or technical alternatives being considered. Figure 1.1 shows the basic RAMS strategy and information flow.

The unit risk factors developed and utilized by this approach are produced in accordance with the Modular Risk Analysis (MRA) methodology as described in Strenge and Chamberlain (1994) and Whelan et al. (1995). The MRA methodology is based on the assumption of linearity between the release site source, the environmental transport, and the impacts at the receptor. The linearity of the system is tested as part of building the Unit Risk Factor Database.

Risk Analysis - Modular System (RAMS)

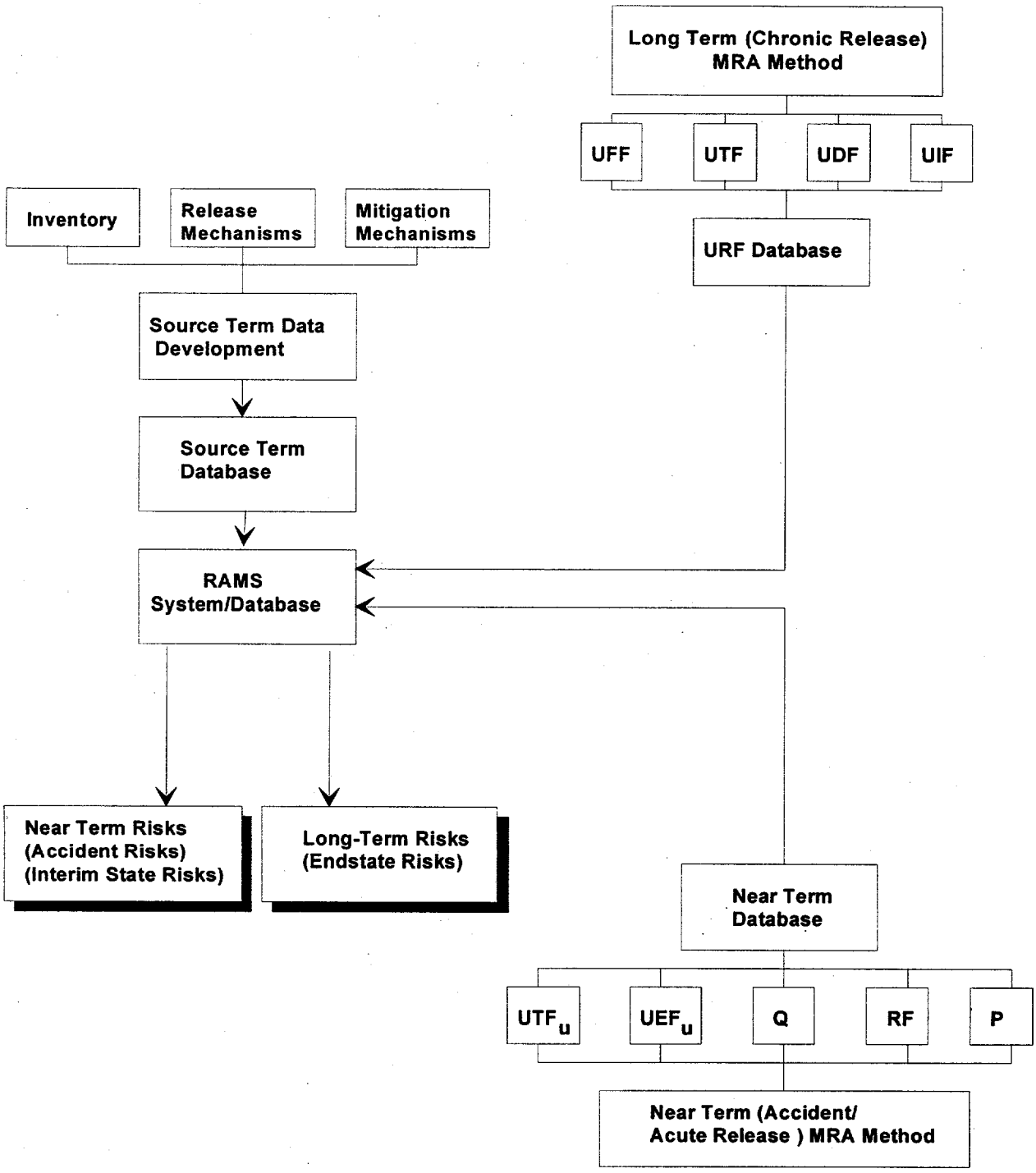

Figure 1.1 RAMS Structure

1.2 RAMS Output Capability

RAMS is a flexible modular system that can be focused on targeted risk analysis needs. It is specifically designed to address risks associated with overall strategy, technical alternative, and "what if" questions regarding the Hanford cleanup mission. RAMS is set up to address both near-term and long-term risk issues. Consistency is very important for any comparative risk analysis, and RAMS is designed to efficiently and consistently compare risks and produce risk reduction estimates (i.e., Δ-risk values). There is a wide range of output information that can be generated by RAMS. These outputs can be detailed by individual contaminants, waste forms, transport pathways, exposure scenarios, individuals, populations, etc. However, they can also be in rolled-up form to support high-level strategy decisions. The following are examples of the types of output that can be generated in either detail or rolled-up form:

Near-term (accident-acute releases)

- accident frequency versus consequence plots
- risk-based urgency lists and diagrams
- individual accident buffer zone radius list and plots
- significant facility and/or accident lists (initial-, interim- and end-states)
- Δ-risk lists, graphs, and plots

Long-term (chronic releases), high-level analysis

- risk profiles over time by a variety of categories (e.g., waste form, location, contaminant, etc.)
- rolled-up and/or selected high-risk contributor lists
- waste type versus remedial technology results matrices
- generalized risk isopleths or 3-D plots (individual risks, collective risks, risk reductions, etc.)

Long-term (chronic releases), detailed analysis

- risk profiles for major contaminants, and waste forms for initial-, interim-, and end-states
- Δ-risk graphs showing risk reduction associated with remedial action, both projected and performance verification
- detailed risk isopleths or 3-D plots (plots for individual risks, collective risks, risk reductions).

1.3 Application For Strategic Analysis, Mission Planning, and Decision-Making

The RAMS was developed to coincide with the current Strategic Analysis and Site Integration (i.e., site-wide system engineering integration). That is, a large number of alternative strategies and "what-if questions" regarding potential strategies and/or specific technical alternatives can most efficiently be screened by first examining whether they meet final end-state requirements and conditions. If a specific strategy does not meet end-state requirements, it would either be adjusted to produce another alternative strategy to analyze or

simply ruled out. It would not be cost-effective to perform the full range of interim process and end-state risk analyses on all potential alternative strategies, without first determining whether the potential strategies are even acceptable from an end-state perspective. The modular approach of RAMS can also be utilized to provide in-depth analyses of the interim process phase for selected alternative strategies that adequately meet end-state requirements. Interim process analyses will also require the assessment of worker risk (so the trade-off between public and worker risks can be incorporated into the decision process), ecosystem risk, cultural risk, and programmatic risk. All of these risk factors must then be coupled with cost and schedule information to fully assess each screened alternative strategy or elements of a strategy. As an example of near-term risk trade-offs, various strategies and technical alternatives need to be examined to decide upon the most cost-effective approach to reducing the mortgage (i.e., cost of minimum-safe operations) on existing Hanford facilities, such as the PFP or K-Basins. As an example of long-term risk trade-off, each of the strategies for wastes to be moved from one Hanford area to another (e.g., moving buried waste in the 100 Area to the 200 Area) have different types of risk that need to be examined. It is important to understand how much risk is averted by the proposed treatment and movement of the waste from one area to another.

2.0 Near-term (Accident) Modular Methodology

This section describes the methods used to estimate accidental health impacts to workers and the general public. The workers are individuals involved in the proposed activity at the location of the postulated accident and are the primary recipients of health impacts from the accident. The general public includes individuals located beyond the Hanford Site boundaries, publicly accessible onsite locations, and co-located workers (non-Project Hanford workers working in the vicinity of Project Hanford workers).

Evaluation of health impacts from acute releases requires special consideration because the release typically involves a pulse of material released to the environment that exposes individuals for short times (hours to a few days) and with little impact afterwards. The major impacts are generally associated with exposure (via inhalation) to the pulse of airborne material.

The primary exposure route considered for short-term airborne release of pollutants is the inhalation pathway. However, it should be recognized that other exposure routes may have a significant impact, especially on the resulting long-term (chronic release) risks associated with contaminant deposition from the acute release. The methods used to evaluate health impacts from inhalation exposure following airborne releases are described here. Exposure to both radionuclides and chemicals is considered.

Health impacts are estimated using the general target-barrier-hazard analysis approach. This approach is based on development of accident scenarios that identify the barriers to exposure (e.g., packaging, containment, distance). The failure of these barriers is postulated to result in exposure of workers near the event (involved workers) or individuals at other locations (public). This process can be represented as follows for the inhalation pathway:

$$\text{Impact} = Q_i * RF * P * UTF_a * UHF_a \qquad (2.1)$$

where Impact = measure of health detriment to the exposed individual (risk or hazard index)

Q_i = amount of hazardous material, i, available for release during the event (g or Ci)

RF = fraction of available material actually released (airborne and respirable) during the event

UTF_a = unit transport factor for acute release to the air, represented for radionuclides as the normalized time-integrated air concentration at the exposure point (sec/m^3), and for chemicals as the air concentration per unit release (mg/m^3 per g)

UEF_a = unit exposure factor for acute inhalation exposure (risk or hazard index per unit integrated air concentration, i.e., risk or hazard index per mg/m^3 or risk per $Ci\text{-}sec/m^3$).

The release fraction is defined for the worker (RF_w) and the public (RF_p), with values potentially being different because of differences in definition of the barriers between the source and the target individual. A probability for each event, P, is also assigned to be used in comparing the calculated health impact with guidelines:

P = probability of occurrence of the event (yr^{-1}).

The methods for estimating worker inhalation exposure are different than those for the public. The following sections describe the worker methods and the methods for the public.

2.1 Worker Health Impacts

The worker may be exposed to airborne material during the postulated event. As the scenario progresses, the worker will likely be aware of the event and evacuate the area, depending on the severity of the event (e.g., fire or explosion). If the event occurs in a location where there are no workers, then there may be no health impact calculation for the worker. The following sections describe methods for evaluating parameters for Equation (2.1) for radionuclides and chemicals.

2.1.1 Release Fraction Evaluation

The release fraction for a scenario is defined as the product of three terms as follows:

$$RF_w = DR * ARF * RSP \tag{2.2}$$

where RF_w = release fraction for worker exposure, i.e., the fraction of the defined inventory that is released in the postulated accident scenario and becomes airborne at the location of the event (dimensionless)

DR = damage ratio, i.e., the fraction of the defined inventory that is released from the source configuration during the event (fraction)

ARF = airborne release fraction, i.e., the fraction of the released material that becomes airborne during the event (fraction)

RSP = respirable fraction, i.e., the fraction of the airborne material that is respirable and contributes to inhalation exposure (fraction).

The release fraction, when multiplied by the source inventory, gives the total quantity of material that is airborne and respirable in the accident scenario.

2.1.2 Unit Transport Factor Evaluation

The unit transport factor provides an estimate of the time-integrated airborne concentration of radionuclides and average air concentration of chemicals to which the involved worker is exposed. This factor is estimated for radionuclides as follows:

$$UTF_{wr} = \frac{\Delta T}{V} \tag{2.3}$$

where UTF_{wr} = unit transport factor for the involved worker for inhalation exposure (sec/m^3)

ΔT = exposure duration for the worker during the scenario (sec)

V = volume that the contamination is dispersed in during the time the involved worker is being exposed to the contamination (m^3).

For hazardous chemicals, this factor is divided by time to give the average air concentration, as follows:

$$UTF_{wc} = \frac{1}{V} \tag{2.4}$$

where UTF_{wc} = unit transport factor for the worker for inhalation exposure to chemicals (m^{-3})

V = volume that the contamination is dispersed in during the time the involved worker is being exposed to the contamination (m^3).

Definition of the volume of dispersal must be coordinated with the exposure time. The ratio of exposure time to volume is represented by the time-integrated air concentration at the worker exposure location. If a worker leaves soon, the exposure time will be less, but the material may be dispersed in a smaller volume of air. Also, at the time of exposure, the total amount of the inventory released in the scenario may not yet be airborne. The following "standard" cases have been developed to be applied to the various scenarios identified. A range of exposure times and volumes are suggested to account for various situations postulated in the accident scenarios.

2.1.2.1 Small Spills and Releases

This category of accident is used for scenarios involving small releases with relatively small energy driving forces (e.g., spills, drops, small earthquakes, and small fires). The worker is assumed either not to be aware of the accident or not to evacuate immediately. No credit is taken for protective equipment (e.g., respirators). The worker is assumed to be exposed for 15 minutes and then leave the area of contamination. This time is selected because

application of the emergency response planning guides (ERPGs) is to be based on air concentrations averaged over a 15-minute period (Craig et al. 1994). A nominal volume of 100 m^3 is used as the dilution volume representing the volume of a large vault or room. The radionuclide UTF for this situation is 900 sec/100 m^3 = 9 sec/m^3. The chemical UTF for this situation is 1/100 m^{-3} = 0.01 m^{-3}.

If there are no workers in the area in which the accident occurs (i.e., remote-handling), then the exposure is assumed to be to a co-located worker outside the building. For this location, a nominal atmospheric dispersion factor of 0.1 sec/m^3 is used for the radionuclide UTF, representing a high value for exposure in a plume in the wake of a building. The chemical UTF for this situation is taken as half the indoor UTF, or 0.005 m^{-3}.

2.1.2.2 Large Fires

Accidents involving large fires are likely to have lower exposures to workers inside the building for several reasons. The worker is likely to be aware of the fire danger and evacuate immediately. The source material is not likely to be released until the fire has progressed significantly, after the worker has left. The fire products will be diluted in a large volume of air because of the high energy release during the fire (causing drafts and mixing). An estimate of the UTF values for large fires is therefore based on an exposure time of 1 minute and a dilution volume of 1000 m^3. The radionuclide UTF for this situation is 60 sec/1000 m^3 = 0.06 sec/m^3. The chemical UTF for this situation is 1/1000 m^{-3} = 0.001 m^{-3}.

If there are no workers in the area in which the fire occurs (as in the case of remote-handling), then the exposure is assumed to be to a co-located worker outside the building. For this location, the UTF values are taken as half the indoor values: 0.03 sec/m^3 for radionuclides and 0.0005 m^{-3} for chemicals.

2.1.2.3 Major Earthquakes

This category is used for major earthquake scenarios that do not involve fires. These scenarios generally involve loss of building containment with release directly to the outdoors. During such an earthquake, the worker may be more concerned about his own safety and not aware of releases of hazardous materials. The worker is assumed to be exposed for 15 minutes, with the released material being dispersed in a volume of 100 m^3 (same values as used for the small release events). The radionuclide UTF for this situation is 900 sec/100 m^3 = 9 sec/m^3. The chemical UTF for this situation is 1/100 m^{-3} = 0.01 m^{-3}.

If there are no workers in the area in which the release occurs (for instance, if the building is unoccupied), then the exposure is assumed to be to a co-located worker outside the building. For this location, a nominal atmospheric dispersion factor of 0.01 sec/m^3 is used for the radionuclide UTF, representing a high value for exposure in a plume in the wake of a building. The chemical UTF for this situation is taken as half the indoor UTF, or 0.005 m^{-3}.

2.1.3 Unit Exposure Factors for Radionuclide Health Impacts

Evaluation of the involved worker impacts for radionuclides is performed using Equation (2.1) with the release fraction defined according to Equation (2.2) and the unit transport factor defined by Equation (2.3). Unit exposure factors (UEFs) are defined for radionuclides for endpoints of dose and risk. The dose unit factor is evaluated as follows:

$$UEF_{aid} = BR\ DF_i \tag{2.5}$$

where UEF_{aid} = unit exposure factor for radiation dose from radionuclide i from inhalation exposure (rem per pCi•sec/m^3)

BR = breathing rate for the involved individual during the exposure period (m^3/sec)

DF_i = inhalation dose conversion factor for radionuclide i (rem/pCi inhaled)

10^{12} = units conversion factor (pCi/Ci).

The cancer incidence unit factor for radionuclides is evaluated as follows:

$$UEF_{aic} = UEF_{aid}\ HE \tag{2.6}$$

where UEF_{aic} = unit exposure factor for radionuclide i from inhalation exposure (risk per pCi•sec/m^3)

HE = health effects conversion factor for inhalation exposure (cancer incidence risk/rem).

The breathing rate is taken as the "light activity" rate for standard man (ICRP 1975): 9,600 L/8 hours or 3.33×10^{-4} m^3/sec. The risk of total cancer incidence is evaluated using the conversion factor of 4.8×10^{-4} risk per rem (ICRP 1991) for workers. For members of the public, the conversion factor is 6.0×10^{-4} risk per rem. The UEF values are then calculated as follows:

UEF_{aid} (risk per Ci sec/m^3) = $3.33 \times 10^8\ DF_i$.

From Equation (2.6), the calculation for workers is as follows:

UEF_{aic} (risk per Ci sec/m^3) = 1.598×10^5.

The calculation for the public is as follows:

UEF_{aic} (risk per Ci sec/m^3) = 1.998 x 10^5 DF_i .

The UEF_{aid} and UEF_{aic} values are presented in Table 2.1 for the radionuclides of interest to the RAHM study. The table also lists the dose factors, Df_i.

Table 2.1. UEF Values for Radionuclides

Radionuclide	Inhalation Dose Factor, rem/pCi	Dose UEF_{aid}, rem/Ci sec/m^3	Worker Risk UEF_{aic}, risk/Ci sec/m^3	Public Risk UEF_{aic}, risk/Ci sec/m^3
Am-241	4.44E-4	1.48E5	7.10E1	8.87E1
Am-242m	4.26E-4	1.42E5	6.81E1	8.51E1
Am-243	4.40E-4	1.47E5	7.03E1	8.79E1
C-14	2.09E-9	6.96E-1	3.34E-4	4.18E-4
Co-60	2.19E-7	7.29E1	3.50E-2	4.38E-2
Cs-137	3.19E-8	1.06E1	5.10E-3	6.37E-3
Eu-152	2.21E-7	7.36E1	3.53E-2	4.42E-2
Eu-154	2.86E-7	9.52E1	4.57E-2	5.71E-2
H-3	6.30E-11	2.10E-2	1.01E-5	1.26E-5
I-129	1.74E-7	5.79E1	2.78E-2	3.48E-2
Np-237	5.40E-4	1.80E5	8.63E1	1.08E2
Pu-238	3.92E-4	1.31E5	6.27E1	7.83E1
Pu-239	4.29E-4	1.43E5	6.86E1	8.57E1
Pu-240	4.29E-4	1.43E5	6.86E1	8.57E1
Pu-241	8.25E-6	2.75E3	1.32E0	1.65E0
Ru-106	4.77E-7	1.59E2	7.62E-2	9.53E-2
Sr-90	1.30E-6	4.33E2	2.08E-1	2.60E-1
Se-79	9.84E-9	3.28E0	1.57E-3	1.97E-3
Tc-99	8.33E-9	2.77E0	1.33E-3	1.66E-3
U-235	1.23E-4	4.10E4	1.97E1	2.46E1
U-238	1.18E-4	3.93E4	1.89E1	2.36E1
Y-90	8.44E-9	2.81E0	1.35E-3	1.69E-3

2.1.4 Unit Exposure Factors for Chemical Health Impacts

Evaluation of the worker impacts for chemicals is performed using Equation (2.1) with the release fraction defined Equation (2.2) and the unit transport factor by Equation (2.4). Chemicals may cause either a carcinogenic impact or a noncarcinogenic impact. The unit exposure factor is defined for noncarcinogenic chemicals as follows:

$$UEF_{Lni} = \frac{1}{HRPG_{Li}} \tag{2.7}$$

where UEF_{Lni} = unit exposure factor for noncarcinogenic health impacts based on ERPG level L for chemical i (hazard index per mg/m^3)

$ERPG_{Li}$ = emergency response planning guide level L for acute exposure to chemical i (mg/m^3).

Three ERPG levels are defined for each chemical (ERPG1, ERPG2, and ERPG3). A fourth level is based on OSHA PEL-TWA values. The UEF_{LNi} values are calculated for each level. Use of the UEF_{LNi} values is defined according to the probability assigned for the accident scenario (see Section 2.1.5). Values for $UEFL_{ni}$ for chemicals of interest are given in Table 2.2.

The unit exposure factor is defined for carcinogenic chemicals as follows:

$$UEF_{ci} = \frac{SF_i \; \Delta T \; BR \; 5}{BW \; AT \; 365.25} \tag{2.8}$$

where UEF_{ci} = unit exposure factor for carcinogenic health impacts from chemical i (incremental cancer risk per mg/m^3)

SF_i = inhalation slope factor for carcinogenic effects for chemical i (incremental cancer risk per mg/(kg•d))

ΔT = time period the involved worker breathes the contaminated air during the event (sec)

BR = breathing rate for the involved individual during the exposure period (m^3/sec)

5 = modification factor for estimation of cancer incidence for acute exposure periods (dimensionless)

BW = body weight

AT = averaging time for estimation of incremental cancer incidence (yr)

365.25 = units conversion factor (d/yr).

The incremental cancer risk is calculated using cancer slope factors of EPA and a modification factor of 5 to account for differences in an acute exposure relative to a chronic exposure (slope factors being intended for chronic exposure). As discussed in Section 2.1.2, the exposure time

Table 2.2. UEF Values for Noncarcinogenic Chemical Effects

Chemical Name (m^3/mg)	1/ERPG3 UEF_{3ai} (m^3/mg)	1/ERPG2 UEF_{2ai} (m^3/mg)	1/ERPG1 UEF_{1ai} (m^3/mg)	1/PEL-TWA	UEF_{Pai}
acetonitrile	1.7E-2	5.0E-2	3.3E-1	3.3E-1	
acrolein	1.4E-1	8.6E-1	4.3E-0	4.3E-0	
aluminum	1.0E-1	1.0E-1	1.7E-1	5.0E-1	
ammonia	1.4E-3	7.2E-3	5.7E-2	5.7E-2	
arsenic	2.5E-2	1.4E-1	1.0E+1	1.0E+2	
barium	4.0E-3	4.0E-1	6.7E-1	2.0E-0	
benzo(a)pyrene	(No Values, see carcinogen UEFs in Table 2.3)				
beryllium	1.0E+1	4.0E+1	1.7E+2	5.0E+2	
cadmium	1.0E-1	1.0E-0	5.0E-0	2.0E+2	
calcium oxide	4.0E-2	4.0E-2	6.7E-2	2.0E-1	
carbon disulfide	6.3E-4	6.3E-3	3.2E-1	3.2E-1	
carbon tetrachloride	6.3E-4	1.6E-3	7.7E-3	7.7E-2	
chlorine gas	1.7E-2	1.1E-1	3.3E-1	6.7E-1	
chloroform	4.0E-5	2.0E-4	2.0E-3	4.2E-3	
cellulosics (cellulose)	1.3E-2	1.3E-2	2.2E-2	6.7E-2	
chlorobenzene	2.1E-4	5.7E-4	9.5E-4	2.9E-3	
chromium III ion		7.8E-3	1.9E-2	3.8E-1	2.0E-0
chromium VI ion	(No Values, see carcinogen UEFs in Table 2.3)				
chrysene	(No Values, see carcinogen UEFs in Table 2.3				
copper ion	2.0E-1	2.0E-1	3.3E-1	1.0E+0	
cyanide ion	3.7E-2	9.1E-2	2.0E-1	2.0E-1	
dichloromethane	5.6E-5	1.1E-4	1.9E-4	5.6E-4	
EDTA	(No values, not considered toxic at expected levels)				
fluorine (gas)	2.5E-2	1.0E+0	1.7E0	5.0E0	
fluoride (ion)	8.0E-2	8.0E-2	1.3E-1	4.0E-1	
hydrazine	7.5E-2	9.4E-1	9.4E-1	9.4E-1	
hydrogen chloride	6.7E-3	3.3E-2	2.2E-1	4.0E-1	
hydrogen fluoride	2.6E-2	6.5E-2	2.6E-1	4.0E-1	
kerosene	1.4E-4	6.9E-4	2.7E-2	2.7E-2	
lead ion	2.0E+0	2.0E+0	3.3E+0	1.0E+1	
mercury		7.1E-2	1.0E+1	1.3E+1	2.0E+1
nickel	1.0E-1	2.0E+0	3.3E+0	1.0E+1	
nitric acid	7.7E-3	1.6E-2	1.9E-1	1.9E-1	
nitrobenzene	1.0E-3	4.0E-2	6.7E-2	2.0E-1	
PCBs	(No Values, see carcinogen UEFs in Table 2.3				
polystyrene	3.3E-4	4.6E-4	7.7E-4	3.3E-3	
potassium hydroxide	1.0E-2	2.5E-2	5.0E-1	5.0E-1	
pyridine		3.0E-4	1.3E-2	2.2E-2	6.7E-2
silver chloride	2.0E+1	2.0E+1	3.3E+1	1.0E+2	
sodium cyanide (as CN^-)	3.7E-2	9.1E-2	2.0E-1	2.0E-1	
sodium hydroxide	1.0E-2	2.5E-2	5.0E-1	5.0E-1	
toluene	1.3E-4	1.3E-3	1.8E-3	2.6E-3	
tributyl phosphate	2.0E-2	6.7E-2	3.3E-1	4.0E-1	
trichloroethylene	1.9E-4	3.7E-4	1.9E-3	3.7E-3	
triethylamine	1.2E-3	2.0E-3	3.3E-3	1.0E-2	
uranium (soluble salts)	5.0E-2	1.0E-1	1.0E+0	5.0E+0	

is set to 15 minutes, based on recommended application of the ERPGs (Craig et al 1994). The breathing rate is set to a level appropriate for light activity, 3.33 x 10^4 m^3/sec. The averaging time is set to 70 years, as recommended by EPA for application of the slope factors.

The UEF values for carcinogenic chemicals are given in Table 2.3 for the chemical of interest to the RAHM study. Equation (2.8) can be written as follows using the specific values of each parameter:

$$UEF_{ci} = 8.37E\text{-}7\ SF \tag{2.9}$$

where UEF and SF are as previously defined.

Table 2.3. UEF Values for Carcinogenic Chemicals

Chemical Name	Inhalation Slope Factor, kg d/mg	Carcinogen UEF, risk per mg/m^3
Arsenic	15.0	1.3E-5
Benzo(a)pyrene	6.1	5.1E-6
Beryllium	8.4	7.0E-6
Carbon Tetrachloride	0.053	4.4E-8
Chromium VI	41.0	3.4E-5
Chrysene	0.0268	2.2E-8
Hydrazine	17.0	1.4E-5
PCBs	7.7	6.4E-6
Trichloroethylene	0.013	1.1E-8

2.1.5 Implementation of Worker Impact Methodology

Equation (2.1) provides the basic method for evaluating impacts from release of pollutants for the accident analysis. Use of this equation and the parameters defined in the previous sections is described in this section. The endpoints for the worker analysis are dose to the worker and the total cancer incidence risk.

The radionuclide impacts to workers are evaluated using Equation (2.1) with terms selected as follows. The unit transport factor for workers (UTF_a) for radionuclides and chemicals is defined in Section 2.1.3. The unit exposure values for radionuclides and

chemicals are based on data from Table 2.2 and 2.3 the UEFs for noncarcinogenic effects are provided in Table 2.2 and for carcinogenic effects in Table 2.3.

2.2 Co-located Worker and Public Health Impacts

Health impacts to individuals outside a facility (in which the accidental release occurs) are evaluated for a member of the public at the facility boundary. The evaluations are performed using the basic analysis method indicated in Equation (2.1). Terms for that equation are described in this section for the target individual and each pollutant type (radionuclides, noncarcinogenic chemicals, and carcinogenic chemicals).

2.2.1 Release Fraction Evaluation

The release fraction for exposure of the public for a scenario is defined as the product of four terms as follows:

$$RF_p = DR * ARF * RSP * LPF \tag{2.10}$$

where RF_p = release fraction for public exposure, i.e., the fraction of the defined inventory that is released in the postulated accident scenario and becomes airborne at the location of the event

DR = damage ratio, i.e., the fraction of the defined inventory that is released from the source configuration during the event

ARF = airborne release fraction, i.e., the fraction of the released material that becomes airborne during the event

RSP = respirable fraction, i.e., the fraction of the airborne material that is respirable and contributes to inhalation exposure

LPF = leakage path fraction, i.e., the fraction of material airborne inside the facility that escapes the facility.

Note this equation is the same as that for the release fraction for workers, except for the addition of the leakage path fraction (LPF). In the present application, the LPF is used to describe the transmission through the building ventilation system to the outdoors. Release fractions have been established for accidents involved in the study without definition of specific parameters indicated in this equation. However, the equation gives a basis for establishing release fractions and can be used to reconcile information from other Hanford studies that may be of use in the present study.

2.2.2 Unit Transport Factors

Exposure via inhalation following an acute release is typically evaluated using a bivariate plume atmospheric transport model. The models provide an estimate of the time-integrated air concentration at a point of exposure. The total intake via inhalation is then

evaluated for a person at the exposure point. The intake is then converted to a measurement of health impact.

The UTF_a values can be calculated independently of the pollutant (assuming all pollutants are dispersed similarly over a short time period). For example, the UTF_a for acute release analyses at Hanford may be calculated using the GENII code at the 5% level of excedence (the calculated value would not be exceeded more than 5% of the time). Other, more sophisticated codes, could also be used, such as those using hourly sequential data to determine the path of the released plume. The UTF_a values are dependent on physical properties of the released material and should be defined by constituent.

2.2.2.1 Radionuclide Unit Transport Factors

The UTFs for radionuclides are based on results from the GENII code and are equivalent to E/Q values for acute releases. The results are provided as a function of downwind distance from the release point. These values are interpolated between calculated data points to determine the UTF value at a given distance. For each facility, the distance to the facility boundary and the UTF information are provided in Table 2.4. The E/Q values presented in this table as a function of distance are based on the 95th percentile (i.e., 5% excedence level) values for ground-level releases from 100N Area for the sector having the highest E/Q values. The corresponding values for the 200 and 300 Areas are 20% (lower) than 100N Area values.

2.2.2.2 Chemical Unit Transport Factors (UEFs)

Unit transport factors for chemicals (UEFs) are evaluated for each chemical using the EPI code™, which uses the standard Gaussian atmospheric dispersion model (Sutton 1932; Pasquil 1961, 1974; and Gifford 1961, 1968). This model is used to determine the concentration of a chemical gas or aerosol (particles less than about 20 micrometers in diameter). The unit transport factors represent the air concentration at a downwind distance per unit total release (grams). The EPI code™ provides the air concentration as a function of distance for each chemical. Units of the chemical UTF are mg/m^3 per gram released. The EPI code™ was run for a unit release over a 15-minute period for Pasquill type F meteorological conditions and a wind speed of 1 m/s. These conditions approximate the typical worst case meteorology and are roughly comparable to the UTF analysis for radionuclides. The EPI code™ has been run for three cases: 1) no plume depletion representative of volatile (gaseous) compounds, 2) deposition velocity of 1 cm/sec representative of particles, and 3) deposition velocity of 0.1 cm/sec representative of liquids. The results from the EPI code™ are listed in the Table 2.5. The use of the UTFs by chemical form for each chemical is defined in Table 2.6.

Table 2.4. UTF Values for Radionuclides and Facility Boundary Distances
Facility Boundary Distances

Site	Facility	Boundary Distance, m	Direction
222S	222 S	120	S
	219S	120	S
2W Tank Farm	241 SX	130	W
	241 U	830	SSW
2E Tank Farm	241 AX	130	E
	241 A	130	E
2W Tank Farm	241 SX	130	W
	241 U	830	SSW
PUREX	202Z	340	E
300 Area	FSC	180	W
	N FUEL	180	W
	306E	50	ENE
	308	270	NNE
	324	210	NNE
	325	280	NNE
	327	390	E
	337	140	ENE
	340	120	NNE
	3730	180	W
600 Area	616S	1500	N
B-Plant	B-Plant	810	E
CWC	CWC	590	E
FFTF	FFTF	180	E
K Basins	105 KE	240	ENE
	105 KW	260	SW
PFP	234-5Z	950	SW
	236 Z	860	SW
	2736 Z	930	SSW
	241 Z	760	SW
	232 Z	800	SW
	242 Z	900	SW
PUREX	202A	340	E
SWBG	SWBG	980	SSW
T-Plant	221-T	840	E
	2706-T	840	E
	291-T	840	E
TANK FARMS	TANKS	130	E
UO3 Plant	224-U	850	E
WESF	WESF	810	E
WSCF	WSCF	1500	N

UTF Values by Downwind Distance

Distance, km	UTF, sec/m^3
0.1	7.50E-2
0.2	2.30E-2
0.3	1.10E-2
0.4	7.00E-3
0.5	4.80E-3
0.8	2.20E-3
1.0	1.50E-3
2.0	5.10E-4
3.0	2.90E-4
4.0	1.90E-4
5.0	1.40E-4
8.0	7.70E-5
11.0	5.10E-5
14.0	3.80E-5
20.0	2.40E-5
25.0	1.80E-5

Table 2.5. Unit Transport Factors for Chemicals, mg/m^3 per gram released

	Deposition Velocity Category		
Distance, km	Volatiles, 0.0 cm/s	Liquids, 0.1 cm/s	Solids, 1.0 cm/s
0.10	5.7E-2	5.1E-2	1.8E-2
0.20	1.5E-2	1.3E-2	3.3E-3
0.30	6.8E-3	5.7E-3	1.2E-3
0.40	3.9E-3	3.3E-3	6.0E-4
0.50	2.6E-3	2.1E-3	3.5E-4
0.60	1.9E-3	1.5E-3	2.2E-4
0.70	1.4E-3	1.1E-3	1.5E-4
0.80	1.1E-3	8.9E-4	1.1E-4
0.90	9.0E-4	7.1E-4	8.6E-5
1.00	7.5E-4	5.9E-4	6.7E-5
2.00	2.4E-4	1.8E-4	1.3E-5
3.00	1.3E-4	9.6E-5	5.1E-6
4.00	9.0E-5	6.3E-5	2.4E-6
5.00	6.8E-5	4.6E-5	1.4E-6
6.00	5.4E-5	3.6E-5	8.9E-7
7.00	4.6E-5	3.0E-5	6.2E-7
8.00	3.9E-5	2.5E-5	4.5E-7
9.00	3.5E-5	2.2E-5	3.5E-7
10.00	3.1E-5	1.9E-5	2.8E-7
20.00	1.7E-5	8.3E-6	1.6E-8
40.00	7.1E-6	2.4E-6	1.6E-10
60.00	3.0E-6	7.3E-7	2.0E-12
80.00	2.2E-6	4.1E-7	1.1E-13
100.00	1.7E-6	2.6E-7	1.3E-14

Table 2.6. Physical Form for Each Chemical
(Note: physical form may vary according to scenario conditions)

Chemical Name	Physical Type
acetonitrile	liquid
acrolein	volatile
aluminum	solid
ammonia	liquid
arsenic	solid
barium	solid
benzo(a)pyrene	solid
beryllium	solid
cadmium	solid
calcium oxide	solid
carbon tetrachloride	volatile
cellulose	solid
chlorine gas	volatile
chlorobenzene	liquid
chloroform	volatile
chromium III ion	solid
chromium VI ion	solid
chrysene	solid
copper ion	solid
cyanide ion	solid
dichloromethane	volatile
EDTA	solid
fluoride (ion)	solid
fluorine (gas)	volatile
hydrogen chloride	volatile
hydrogen fluoride	volatile
hydrazine	volatile
kerosene	liquid
lead ion	solid
mercury	solid
nickel	solid
nitric acid	liquid
nitrobenzene	liquid
PCBs	liquid
polystyrene	solid
potassium hydroxide	solid
Pyridine	liquid
silver chloride	solid
sodium cyanide (as CN)	solid
sodium hydroxide	solid
toluene	volatile
tributyl phosphate	liquid
trichloroethylene	volatile
triethylamine	liquid
uranium (soluble salts)	solid

2.2.3 Unit Exposure Factors

The UEF values are evaluated quite simply for radionuclides as the product of the inhalation rate times the inhalation slope factor for chemicals or times an inhalation dose conversion factor times a health effects conversion factor for radionuclides. A similar approach is used for carcinogenic chemicals. The analysis for noncarcinogenic chemicals uses comparison of the estimated exposure point air concentration to a concentration guideline, such as the Emergency Response Planning Guidelines (ERPGs).

The evaluation of unit exposure factors for the public is the same as for workers (described in Section 2.1.3). The values for radionuclide UEFs are given in Table 2.1. Values for chemical UEFs are given in Tables 2.2 and 2.3.

2.2.4 Implementation of Public Impact Methodology

Equation (2.1) provides the basic method for evaluating impacts from the release of pollutants for the accident analysis. Several endpoints are needed for the study: 1) impacts at the facility boundary, 2) the distance to the exclusive use boundary, and 3) the amount of pollutant in the plume at the two boundaries. Also, for radionuclides, the impacts must be defined in terms of dose and total cancer incidence risk. These analyses are described in the following sections.

2.2.4.1 Radionuclide Impacts at the Facility Boundary

The radionuclide impacts at the facility boundary are evaluated using Equation (2.1) with terms selected as follows:

For radiation dose

UTF_a = UTF at the distance to the facility boundary (Table 2.4)
= UEF_{aid} (Table 2.1)

For cancer incidence risk

UTF_a = UTF at the distance to the facility boundary (Table 2.4)
= UEF_{aic} for the public (Table 2.1).

2.2.4.2 Chemical Impacts at the Facility Boundary

The chemical impacts at the facility boundary are evaluated using Equation (2.1) with terms selected as follows:

UTF_a = UTF for the chemical at the distance of the facility boundary for the physical form indicated in Table 2.6 and UTFs from Table 2.5

UEF_a = UEF_{Lai} from Tables 2.2 and 2.3 for noncarcinogenic and carcinogenic effects, respectively.

The UEF value for noncarcinogenic effects are defined for four impact levels in Table 2.2. Selection of the impact level is dependent on the probability of the accident as described in Section 2.2.3.4.

2.2.4.3 Distance to the Exclusive Use Boundary for Radionuclides

The evaluation of minimum distance to the exclusive use boundary for radionuclides is based on the distance at which the radiation dose reaches a dose limit. The dose limit is a function of the event probability [P in Equation (2.1)], as indicated in Table 2.7. The distance is estimated using the UTF_a values given as a function of downwind distance. The impact in Equation (2.1) is set to the dose limit (for the given value of P), and the equation is solved for the value of UTF_a, which will provide the dose limit at the boundary, as follows:

$$UTF_a(dist) = \frac{\text{Dose Limit}}{\sum_i Q_i * RF_i * UEF_{aid}} \tag{2.11}$$

where UTF_a(dist) is the UTF at the distance for which the total dose is equal to the Dose Limit (rem). The summation in the denominator represents inclusion of contributions from all radionuclides released from the facility for the given accident scenario. The UTF_a values for radionuclides (see Table 2.1) are interpolated to determine the distance at which the UTF is equal to the value calculated by Equation (2.11).

Table 2.7. Dose Limits for Exclusive Use Boundary

Probability Range	Dose Limit, rem
$10^{-6} < P \leq 10^{-4}$	25
$10^{-4} < P \leq 10^{-2}$	5
$10^{-2} < P \leq 1$	0.5

2.2.4.4 Distance to the Exclusive Use Boundary for Chemicals

The evaluation of minimum distance to the exclusive use boundary involves consideration of both carcinogenic and noncarcinogenic health impacts. The endpoint criteria are given in Table 2.8. The noncarcinogenic endpoints are based on ERPG and PEL-TWA values, while the carcinogenic endpoints are incremental cancer risks (ICR) for the chemical of interest. The chemical endpoints are a function of the event probability (P in Equation (2.1)), as indicated in Table 2.8. Using the information in this table, and the known probability of the event, the distance at which the UTF for the endpoint of interest can be estimated.

For noncarcinogenic chemicals, the endpoint is evaluated for the distance that satisfies the following equation:

$$UTF_a(dist) = \frac{1}{\Sigma\ Q * RF_p * UEF_a} \tag{2.12}$$

where terms are as previously defined. For the accident probability scenario, the value for UEF_a is taken from Table 2.2 for the column indicated in Table 2.8. For example, an analysis involving release of aluminum during an accident with probability 10^{-3} would use the UEF_a based on ERPG1, as indicated in Table 2.8. The UTF_a values would be taken from Table 2.5, last column (solid), as indicated in Table 2.6 (aluminum to be treated as a solid).

For carcinogenic chemicals, the endpoint is evaluated for the distance that satisfies the following equation:

$$UTF_a(dist) = \frac{criterion}{\Sigma\ Q * RF_p * UEF_a} \tag{2.13}$$

where terms are as previously defined. The value for the "criterion" is taken from Table 2.8, based on the probability for the accident scenario in question. For example, a scenario of probability 0.1 that releases beryllium would be assigned a "criterion" of 2×10^{6}, a UEF_a of 7×10^{-6} (from Table 2.3), and would use UTF_a values from the last column of Table 2.5, as indicated in Table 2.6 (beryllium to be treated as a solid).

For both of the above analyses, the UTF_a values for the chemical of interest are interpolated to determine the distance at which the UTF is equal to the value calculated by the equations, for noncarcinogens and carcinogens, respectively. The equations must be evaluated for all chemicals and impact types. Some chemicals have UEF_a values for both carcinogenic and noncarcinogenic endpoints. All distances calculated for radionuclides and chemicals are reviewed, and the largest distance is the value used for the exclusive use boundary.

Table 2.8. Chemical Concentration Criteria for Exclusive Use Boundary

Probability Range (yr^{-1})	Noncarcinogen UEF Basis, from Table 2.2	Carcinogen LCR Criteria
$10^{-6} < P \leq 10^{-4}$	ERPG-2	2.0E-2
$10^{-4} < P \leq 10^{-2}$	ERPG-1	2.0E-4
$10^{-2} < P \leq 1$	PEL-TWA	2.0E-6

2.2.4.5 Soil Concentration from Deposition

The total amount deposited to soil is estimated for radionuclides as follows:

$$C_{si} = Q * RF_p * UTF_a * V_d \tag{2.14}$$

where C_{si} = soil concentration for radionuclide i, from deposition, Ci/m^2

V_d = deposition velocity for the radionuclide, m/sec

and other terms are as previously defined.

A conservative value for deposition velocity of 0.01 m/sec is used for all radionuclides representing particulate deposition. Noble gas radionuclides (Ar, Kr, Xe, and Rn) do not deposit ($V_d = 0$).

The total amount deposited to soil is estimated for chemicals as follows:

$$C_{si} = Q * RF * UTF * t * V_d \tag{2.15}$$

where C_{si} = soil concentration for chemical I, from deposition, g/m^2

t = release duration for the accident scenario, sec

and other terms are as previously defined. The release duration for each accident is set to 15 minutes for consistency with the calculation of the chemical UTF_a values. The deposition velocity is set according to the chemical form defined in Table 2.6. For "volatile" chemicals, there is no deposition ($V_d = 0$). For "liquids" the deposition velocity is set to 0.001 m/sec, and for "solids" the deposition velocity is set to 0.01 m/sec.

2.3 Environmental Consequence Index - Near-term Criteria

The environmental consequence analysis evaluates the impacts on land useability due to accidental (airborne) releases. This is not an ecological toxicity analysis. Rather, this section describes the type of human activities that could safely occur within certain distances of the facility being evaluated, and the long-term impacts on socio-cultural useability given various accident probabilities and potential consequences. While socio-cultural useability depends on the quality of the natural resources and the habitat, the accident analysis uses environmental persistence of the contaminant rather than concentration-dependent toxicity to individual organisms as the environmental measure.

The basic elements used in the environmental consequence evaluation are 1) the Exclusive Use Zone (EUZ) for each accident, which is based on accident probability and short-

term human dose limits, 2) the importance of natural and cultural resources within the EUZ, and 3) the length of time that the zone needs to be maintained due to inherent characteristics of the material (persistence or half-life).

Radius of the EUZ has been described in other sections. Resource importance is estimated from probable distance from a source in a given geographic area (100 Area, 200 Area, etc.) to the nearest sensitive natural or cultural resource. Due to the sizes of the area boundaries, the locations of sources within the areas, and the particular resources in the surrounding areas, the most probable minimum reasonable distance from source to resource will vary from area to area. If the EUZ radius for a particular accident scenario is equal to or smaller than this distance, the accident is deemed low-impact because it is assumed that few or no resources would be adversely affected. Scaling factors of 5x and 10x are used as benchmarks for medium and high impacts. Note the radius of the EUZ is based on short-term human dose limits, not on degradation of cultural resources or on impacts to natural resources. Therefore, the actual impact zone of an accident would likely extend beyond the EUZ boundary. However, since this is a ranking exercise and not an evaluation of absolute impacts, the ranking of accidents should be roughly the same even if cultural resource degradation is not used to define a zone of impact.

The accident probability and the toxicity of the material to humans are used to derive the radius of the EUZ, but the length of time the zone would be required, given current conditions, will be proportional to the persistence of the driving contaminant. Although the size of the EUZ would actually shrink over time as the material (most likely radioactive) decays, this prioritization activity does not require this level of precision. Furthermore, even if the primary isotope were to decay enough that the EUZ boundary could be reduced, it would only be reduced as much as indicated by the next most toxic contaminant present at the source. For ranking purposes, then, the simplest assumption is that the area associated with EUZ boundaries remain committed over 10 half-lives of the original driving contaminant.

2.3.1 Area-Specific Natural and Cultural Resources

The radius of the EUZ is dependent on the nature and quantity of the material contained in the facility, regardless of where the facility is located. The distance to the nearest sensitive resource, however, varies between geographic areas, as shown in Table 2.9.

As a conservative first approximation for determining area impacted, the following can be assumed: If the radius of the EUZ is less than or equal to the distance in Table 2.9, this is considered a low-impact accident. Medium and high impacts are scaled from this minimum distance, as shown in Table 2.10. However, the true impact area will depend on the accident and the nature of the contaminants released (e.g., contaminants that deposit more rapidly would have a higher impact near the source and less farther away from the source).

Table 2.9. Distances from Sources to Nearest Probable Sensitive Resource

Geographic Area	Distance from Any Source to the Nearest Probable Sensitive Natural or Cultural Resource
100 Area	0.1 km
200 Area	2 km
300 Area	0.2 km
400 Area	0.5 km
600 Area	0.1 km

Table 2.10. Low, Medium, and High Impact Radii by Area

	Low-impact radius	Medium-Impact radius (5x)	High-Impact radius (10x)
100 Area	≤0.1 km	≤0.5 km	≤1 km
200 Area	≤2 km	≤10 km	≤20 km
300 Area	≤0.2 km	≤1 km	≤2 km
400 Area	≤0.5 km	≤2.5 km	≤5 km
600 Area	≤0.1 km	≤0.5 km	≤1 km

2.3.2 Rationale for Selecting Distances by Geographic Area

The rationales for distances to sensitive resources vary from area to area.

2.3.2.1 100 Area Rationale

The 100 Area is the most sensitive area at Hanford for both cultural and natural resources. The 100 Area is located along the Columbia River and the entire shoreline is important due to the presence of critical habitats, threatened and endangered species, tribal social and religious history that has extended for over 10,000 years, and archaeological resources. The 100 Area also provides wildlife access corridors between the interior of the Site and the river. The Columbia River itself is considered to be a cultural resource by local tribes because it is central to the ecology of the Columbia River basin and therefore also central to indigenous cultures and religion. If the river is degraded, culture and religion are also harmed.

The 100 Area has the highest density of individual artifacts, burial sites, and other sites of cultural importance. Therefore, any accidental release of contaminants from a source within the 100 Area is likely to occur within 100 m of such a site, and could either directly impact the site or potentially require physical disturbance of a site during emergency response.

2.3.2.2 200 Area Rationale

The 200 Area is located within the Central Plateau, which includes some areas of high quality, undisturbed habitat containing sensitive species of wildlife. Since the 200 Area is farther from the river, however, and since little undisturbed habitat remains within the boundary of the 200 Area, most accidental releases would have to travel further from 200 Area sources than from 100 Area sources to adversely impact either high-quality habitat or cultural resources. There are two exceptions to this, however: 1) A number of Cold War-era buildings in the 200 Area are, or may be, eligible for inclusion on the National Register of Historic Places. They would require additional protective or data-gathering measures should any emergency response be required; and 2) Gable Mountain and Butte are Native American sacred sites and traditional cultural properties, which are located within 5 km of some of the potential release sources. Airborne releases would affect any elevated geoform due to impaction of particles. Some accidents, therefore, would have a highly adverse cultural impact closer to the source than would be indicated by linear distance, which is not accounted for in this evaluation.

2.3.2.3 300 Area Rationale

The 300 Area includes areas close to the river that have never been surveyed for subsurface cultural resources, although they are potentially present. Contaminant releases from the 300 Area could impact the river, areas of cultural importance along the river, and important plant and animal resources close to the river. Since the 300 Area itself is largely developed, however, some small accidental releases would remain within the boundary of the 300 Area. Therefore, the distance to sensitive resources was estimated as 200 m, rather than 100 m as in the 100 Area, even though both areas are immediately adjacent to the river.

2.3.2.4 400 Area Rationale

The 400 Area (the Fast Flux Test Facility (FFTF)in particular) is surrounded by recovering shrub-steppe habitat. Some of the surrounding area has not been surveyed for cultural or historic resources. While the 400 Area is approximately 7 km inland from the river and may not have as high a density of artifacts and sites as areas closer to the river, it nevertheless is of cultural importance for reasons of resources, aesthetics, and tribal history. It was estimated that accidental releases from the FFTF facility could affect resources within 0.5 km.

2.3.3 Environmental Consequence Index

The environmental consequence index (ECI) is determined by the radius (in km) or impact and the persistence of the contaminant on which the radius is based. The rule of thumb is that 10 half-lives are conservatively assumed to be needed in order for the radioactive material to decay sufficiently to recover unrestricted land use. While the exact number of half-lives needed will, of course, depend on the initial concentration, this ranking exercise assumed that concentration was taken into account in setting the dose-based EUZ boundary. The size of the EUZ zone is a snapshot in time and unrelated to the persistence of the materials. It makes sense that rapidly decaying materials would allow recovery of unrestricted land uses faster than radionuclides that decay more slowly. For ranking purposes, the simplest method was to use 10 half-lives of only the single driving contaminant used to derive the EUZ radius. If there are accident scenarios for which the driving contaminant is not a radionuclide, persistence can be evaluated as follows: for inorganic materials, from chemical specific data or approximated as 250 yrs; for organic materials which deposit, from chemical specific data or approximated as 100 yrs; for water-soluble organic material (NO_4, NH_4, CN, NO_2, PO_4), from chemical specific data or approximated as 10 yrs.

The ECI is expressed below as a function of radioactivity, since most, if not all, of the accident-based EUZs are driven by radionuclides:

ECI = high impact x 10 half-life, or
medium impact x 10 half-life, or
low impact x 10 half-life.

If a single numeric score is needed per accident scenario for ranking purposes, one could be designated by assigning values of 10-5-1 and multiply that value by 10 half-lives to produce a crude estimate.

3.0 Long-term (Chronic) Modular Methodology

The modular risk assessment (MRA) methodology used for analyzing chronic release (long-term) risks was developed by Pacific Northwest National Laboratory and Advanced Sciences, Inc., to facilitate regional-scale risk analysis. This methodology is described in several documents (Strenge and Chamberlain 1994; Whelan et al. 1995). The MRA methodology was developed for regional and site-wide chronic release risk computations involving a large number of release sites and contaminants with different waste forms and for various environmental settings and transport and exposure pathways.

3.1 MRA Methodology

The MRA approach allows for :

- regional and multiple-site analyses
- consistent analysis of large number of release sites in varying environments
- efficient use of project resources
- application to broad range of problems and solutions
- implementation with different software tools
- results that can be easily and efficiently revised.

The MRA methodology is based on the assumptions of linearity between the release site source, the environmental transport, and the impacts at the receptor. By determining the linearity of the system, the methodology can be divided into compartments that can be implemented both independently and concurrently. The compartments of the MRA methodology are 1) contaminant mass at the source, 2) determination of contaminant-release rate from the source, 3) transport modeling of the contaminant into the environment (environmental concentrations at the receptor location), 4) exposure assessment for dose to receptor (MEI or population), and 5) estimation of risk at the receptor.

The MRA methodology is based on the following general description for risk/hazard:

$$\text{Health Impact} = P \times RF \times URF \tag{3.1}$$

where Health Impact = estimated probability of adverse effects (carcinogenic risk for radionuclides and chemical carcinogens and hazard quotient for noncarcinogenic constituents) from a contaminant at a receptor

P = probability of the release event (unitless)

RF = releasable fraction of the source (unitless)

URF = health impact associated with a contaminant at a receptor location, based on a unit quantity at the source and has a unit of health impact

per source quantity (NOTE: Source quantity is often expressed as a source activity for radioactive contaminants.).

Therefore, the URF is determined as follows:

$$URF = [(Q \times UFF) \bullet UTF] \times UDF \times UIF \tag{3.2}$$

where Q = estimated quantity of contaminant at the source in grams or curies

UFF = time series of contaminant mass per time divided by unit contaminant mass

UTF = time series of environmental concentrations at a receptor produced from the UFF for groundwater, air, surface water, and soil media (expressed as contaminant mass per volume of medium divided by unit contaminant mass per time)

UDF = dose to an organism from a unit concentration for a given exposure pathway - For chemicals, UDF is expressed as contaminant mass per body mass per time divided by unit contaminant mass per volume of contaminant in the environment at the receptor point. For radionuclides, UDF is expressed as contaminant total dose (rem) divided by unit contaminant mass per volume of contaminant in the environment at the receptor point.

UIF = unit health-impact factor that provides the dose-conversion factor for radionuclides, cancer potency factor for chemical carcinogens, or reference dose for noncarcinogenic contaminants - For radionuclides, UIF is expressed as cancer incidences divided by unit contaminant total dose. For chemical carcinogens, UIF is expressed as cancer incidence divided by unit contaminant mass per body mass per time. For chemical noncarcinogens, UIF is expressed as hazard quotient divided by unit contaminant mass per body mass per time.

Whereas Equation (3.2) provides a description of the link between the different unit factors involved in computing the URF, Equations (3.3) through (3.6) provide a description of each of the unit factors that were developed to compute URFs. Note the UFF and UTF are time series and need to be convoluted together. The source, UDF, and UIF are multipliers. The UFF includes the probability of release and the release-factor fraction for a given scenario:

$$UFF = \frac{F_s}{S_u} \tag{3.3}$$

where F_s = contaminant-flux-release rate from the waste form, in grams per year or curies per year

S_u = unit source mass in grams or source activity in curies

$$UTF = \frac{C_f}{F_u} \tag{3.4}$$

where C_f = contaminant concentration at the receptor, based on transport through the appropriate medium, in grams per cubic meter or curies per cubic meter divided by grams per year or curies per year (air), grams per square meter or curies per square meter divided by grams per year or curies per year (soil), or grams per milliliter or curies per milliliter divided by grams per year or curies per year (water)

F_u = unit contaminant flux, in grams per year or curies per year

$$UDF = \frac{D_c}{C_u} \tag{3.5}$$

where D_c = unit dose from the contaminant, grams of contaminant per kilogram of body mass per day or total dose (rem) to a human at the receptor

C_u = unit concentration at the receptor, grams per cubic meter or curies per cubic meter divided by grams per year or curies per year (air), grams per square meter or curies per square meter divided by grams per year or curies per year (soil), or grams per milliliter or curies per milliliter divided by grams per year or curies per year (water), based on contaminant transport through the appropriate medium

$$UIF = \frac{R_d}{D_u} \tag{3.6}$$

where R_d = risk associated with a unit dose, risk per gram of contaminant per kilogram of body mass per day or risk per total dose

D_u = unit dose to a human, grams of contaminant per kilogram of body mass per day or total dose (rem).

URFs are developed for the different environmental settings (at the same or different installations). Each environmental setting is assumed to have homogeneous climatology, hydrology, and geologic characteristics. Therefore, the URF is representative of the risk from a release site within a region, not actual risk. The site-specific climatology, hydrology, and geologic characteristics are used for this analysis, where possible. The regional climatology (joint-frequency distributions) and population for regional air receptors for each environmental setting are used to evaluate atmospheric impacts.

Conceptual site models are developed for each environmental setting associated with a release site. These conceptual site models define the relationship between the source contaminant at the release sites and the health impacts at the receptors. The important components associated with these relationships are the constituents of interest, waste-source

types and forms, release mechanisms, exposure media, and receptor types. In cases of environmental releases, such as landfills and trenches, the probability of a release or exposure event is assumed to be 1.0. Likewise, it is assumed sources are in a releasable form such that the releasable fraction of the source is equal to 1.0. For accident and potential future release sites, the probability and release fractions need to be determined.

Once the waste configuration and waste forms for each environmental setting and release site have been identified, the release mechanisms need to be selected. In general, infiltration of contaminants to groundwater and surface water, suspension, volatilization, and overland-flow-release mechanisms are considered. The resulting release rate (contaminant flux) for each release mechanism is also dependent on the waste form. In addition, the solubility of each contaminant in the waste form is potentially an important factor in determining contaminant-release rates. Generally there are different waste form categories involved: (e.g., soil/debris, cement, glass, protective caps, barriers). The solubility limits for the primary waste contaminants at each site are necessary for the analysis.

The UFFs are generated using a computer model (Streile et al. 1996) to simulate the release of contaminants from a source term. The model directly considers contaminated soil/debris, solidified (cemented), and glass waste forms. The contaminant is removed from the source by simultaneously evaluating degradation or decay, groundwater leaching, atmospheric volatilization, and soil erosion by wind suspension and overland runoff, as appropriate. Because of potential solubility issues associated with the waste forms analyzed, the contaminant mass (Q) was included with the UFF to produce total flux factors. These were subsequently convoluted with the UTFs, thereby resolving the solubility issue.

The UTF represents the environmental fate and transport component of the unit factor methodology. The UTF value is based on the release of 1 g or 1 Ci of contaminant from the source per year, which, after being transported through a specific environmental medium, ultimately arrives at the receptor exposure point. The receptor exposure point for groundwater analysis is a specifed distance (specified for each study) located downgradient from the source, and to be conservative is generally assumed to be in the centerline of the plume. The atmospheric receptor is located at the point of highest concentration that is at least 100 m away from, but within an 80-km radius of, the release point. The UTF is media-dependent.

The UIF relates the chemical intake or radiation dose to a risk or hazard index, as appropriate, for each contaminant. Both the UIF and UDF are defined for intake or exposure routes of inhalation, ingestion, and external radiation.

Three different human-health-impact types were considered in this study: 1) carcinogenic radionuclides, 2) carcinogenic chemicals, and 3) noncarcinogenic chemicals. These impact types are directly related to the three types of UIFs computed for this study.

Finally, both maximally exposed individual (MEI) and population endpoints were considered. The MEI endpoints influence UDF calculations by defining dose intake factors and UTF calculations by defining the exact location of the receptor. The combination of these

factors requires the convolution of time series and straight multiplication. The UFF and UTF are time series at different locations. The UFF is the time series of contaminant-release rate from the source, while the UTF is the time series of contaminant concentration at the receptor point. Equation (3.7) provides the convolution method used to combine the series:

$$URF = [Q \times UFF] \bullet UTF(\tau) = \int_0^{\tau} [Q \times UFF(t)] \times UTF(\tau - t)dt \,. \qquad (3.7)$$

Once the convolution is completed, all the factors can be combined based on Equation (3.2) to provide health risk or hazard quotient impact values.

The units for air UTFs are either 1) grams of contaminant per cubic meter of air divided by gram per year of contaminant at the source or 2) curies of contaminant per cubic meter of air divided by curie per year of contaminant from the source. The units for soil are either 1) grams of contaminant per square meter of soil divided by gram per year of contaminant from the source or 2) curies of contaminant per square meter of soil divided by curie per year of contaminant from the source. The units for surfacewater or groundwater are either 1) grams of contaminant per milliliter of water divided by gram per year of contaminant from the source or 2) curies of contaminant divided by milliliter of water curie per year of contaminant from the source.

The UDF involves an average daily intake in grams of contaminant per kilogram of body mass per day for chemicals or a lifetime radiation dose in rem for radionuclides.

3.2 Environmental Consequence Analysis - Long-term Criteria

Long-term environmental consequences and impacts on land useability, due to contamination spread, are usually of concern for a study. This section is not intended to produce an evaluation of ecological or human toxicity related consequences. Rather, it describes impacts to human activity patterns, including social, cultural, religious and recreational uses due to restrictions on access and contamination of natural and cultural resources. Land useability and human exposure-based risk are inversely proportional to each other - more potential exposure means lower land-use levels would be allowed. Land useability and natural resource quality are directly proportional to each other: better habitat (or less ecotoxicity) allows a greater number of "higher and better" land uses. So, the three factors needed to assess long-term useability are:

- Acres affected - Acres adversely impacted (degraded or restricted), or acres of high (or improved) quality relative to a baseline, or acres available for a particular land use. If total acreage is not available, then total amount of material released into the environment from the source over time could be used.

- Media, resources, habitat, landscapes affected - If the current quality is good, then decrements would be measured: if current quality is less than ideal, then improvements

would be measured. If the quality will fluctuate over time (such as during passage of a groundwater plume), the quality relative to the original baseline/optimal condition would be measured. For land-use planning purposes, the highest possible land use at selected times could be used to show incremental improvements over a block of land of a predetermined size.

- Time - The duration of degradation, time to future impact, or time to achieving the target end-use or fully restored habitat are important considerations. The persistence of the contaminants deposited could possibly be used as a measure of urgency with respect to urgency for action.

4.0 RAHM Database

The RAHM Database is designed to serve as a collection point for all the pertinent modular risk information associated with a study. It stores summary unit factor information needed to determine the impact of mobile constituents as they are released; however, all the detailed unit risk factor information associated with long-term risks are maintained in a separate database (i.e., the URF Database). RAMS also uses the RAHM Database to provide support mapping, translating, and/or data converting needs for specific RAMS calculations.

4.1 Database Design

The database is designed as a normalized, relational database. By normalized, it is meant the database contains a minimum amount of repeated information. Ideally, there is no duplicate information in the database other than the key information needed to establish the relationships between records in different tables. Detailed information about the table structures is provided in Appendix B. The data dictionary for the tables is included in Appendix C. The data dictionary contains definitions for each field in the tables and a list of legal values for fields containing codes or a limited set of key values.

4.2 Acute Risk Component Description

The accident is described in the SITE table including the area, site, and facility of the accident location. The accident is also described in terms of the accident probability and the amount of the accident inventory that is released external to the facility in the accident. The inventory for the accident is described in the INVEN3 table. For each facility accident, the constituents and amounts are listed. The distance and direction to the nearest facility or site boundary are specified in the BOUNDARY table.

The unit transport factors are found in three tables: DIST_UTF, CHEM_UTF, and WRKRSK. Radioactive constituent transport is included in DIST_UTF. Transport amounts for solid, liquid and volatile chemicals are found in CHEM_UTF. Radioactive and chemical transport for the worker risk calculation are found in WRKRSK. The WRKRSK table also includes the ratio of the release inventory for the worker risk accident as compared to the external release inventory.

The unit exposure factors are found in three tables: RAD_UEF, CHEM_UEF, and CARC_UEF. For each radioactive constituent, RAD_UEF contains the inhalation dose factor, the acute inhalation dose unit exposure factor, and the acute inhalation cancer risk factor. For each noncarcinogenic chemical constituent, CHEM_UEF contains the inverse of ERPG1, ERPG2, EPRG3, and PEL-TWA concentration limit values. For each carcinogenic chemical constituent, CARC_UTF contains the inhalation slope factor and carcinogen unit exposure factor.

To implement an environmental consequence index, the MAT_PROP table is used to provide radionuclide half-life.

4.3 Long-Term Risk Component Description

The long term risk is described in three tables: SITES, INVEN, and URF. SITES identifies the locations to be evaluated for long term risk. INVEN lists the constituent amounts, source, and media for each site. URF provides the risk to a receptor for a constituent from a site media via a transport pathway. The results performing the long term risk calculation are stored in a table, RISK.

4.4 Acute Risk Database Content

The tables BOUNDARY, CARC_UEF, CHEM_UEF, CHEM_UTF, DIST_UTF, and WRKRSK are loaded from the tables presented elsewhere in this document. SITES2 and INVEN3 are loaded from files representing extracted material from accidents to be evaluated. MAT_PROP is a general material property table.

4.5 Long-Term Database Content

The tables SITES and INVEN are loaded from files representing extracted material for the sites referenced. The URF table is loaded from a set of files of URF calculation results for the specified sites, receptors, pathways, media, and constituents.

5.0 Quality Assurance

The quality assurance program for RAHM is defined by Battelle Quality Assurance (QA) Plan number LSC-024, Revision 0, effective June 1, 1995. The QA Plan applies to the entire Integrated Risk Assessment Program (IRAP). Within the QA Plan, requirements are identified and procedures and guidelines provided. The remainder of this section describes the QA program developed for information-gathering, analysis, and reporting for a RAHM study. The implementation steps of the program are also described.

5.1 Objectives of the QA Program

The IRAP has driven development of the QA program in three ways:

- Data from numerous sources are used to analyze health and ecological risks, in supporting decisions about environmental restoration and waste management at the Hanford Site.

- Data are aggregated, summarized, or converted before being used. These processes require professional judgement based on the technical qualifications and experience of the research staff.

- Studies produced evaluate and estimate the impact of hazardous materials at Hanford. The information produced will be used by DOE to prioritize clean-up activities at Hanford.

Therefore, certain measures should be implemented to assure the accuracy and traceability of the project's input data, results, and conclusions. These measures are also necessary since the results and recommendations will receive broad circulation within DOE, various external groups, and the public. The primary objective of the QA program is to assure data used in producing the risk assessments and prioritizations are reproducible, traceable, and (thus) defensible. All data and decisions must be documented and reviewed at appropriate points during each task to minimize errors and ensure decisions are supportable.

5.2 QA Approach

The objectives of the QA Program involve identifying specific activities performed during the RAHM work that can both ensure and enhance the quality of the end product. Data must be traceable to sources; errors in data transfer, aggregation, summarization, conversion, or calculation must be identified and corrected as soon as possible. The following terms explain how these objectives are satisfied.

5.2.1 Quality Points

Analysis of the RAMS and RAHM studies has identified various points during the work where a QA activity could be undertaken. These locations in the task processes are called

quality points. The QA activity relating to information at a quality point could be an internal verification (IV), a record of assumption (ROA), an independent technical review (ITR), or an assessment of external software.

An IV is a separate, documented review of the accuracy of data before continuing with the task activities. The reviewer will normally be someone working on the project, but not the person responsible for developing or transferring the information. The IV verifies data transferred from outside the task or from one element of the task to another.

The ROAs are used to document engineering and scientific assumptions required to complete the work. Such assumptions and judgements are critical in analyzing results, documentation, and review efforts of the overall task. The ROAs systematically document these assumptions, judgements, and interpretations. Each ROA includes the subject and purpose, a statement of the assumption which is being made, and a brief narrative to justify the assumption.

An ITR is a technical review of a task's formal/final product, frequently a finalized formal document, by a group of technically qualified individuals who are not members of the team which has prepared the product. All ITRs for IRAP are performed in accordance with PNL-MA-70, PAP-70-604, *Independent Technical Review*.

Finally, externally developed software is evaluated to determine if proper QA measures have been taken during the development, maintenance, and use of the programs. These assessment activities include:

- review of current information on available versions and known errors or modifications
- review of all testing that has been performed and the results
- recommendations and oversight of additional testing as deemed necessary
- review of the current configuration management plan and user documentation.

5.2.2 Quality Points for RAHM

To identify the necessary QA activities for a specific study under RAHM, the task activities are segregated into information flow activities and software analysis tool development.

The acquisition, aggregation, and reporting of data for RAHM are analyzed based on the design of the study. Quality points are identified throughout the task and QA activities assigned to satisfy the program requirements of IRAP. Figure 5.1 shows an example of these quality points and activities for a typical study.

5.3 QA Program Implementation

The following paragraphs describe the implementation of the IRAP QA Program for the information aspects of the RAHM.

5.3.1 Training

Formal training on the QA plan is conducted for the staff participating in a particular study.

5.3.2 Data Verification

Internal Verification (IV) of the data is performed and documented in the project files. Additionally, the following actions are taken:

1) Care is taken to assure the source of all data has been identified and recorded.
2) All information in the RAHM Database is identified with a version number for traceability.

5.3.3 Records of Assumption (ROAs)

ROAs are completed at all quality points and are included in separate appendices in the formal study reports associated with a particular study.

5.3.4 Independent Technical Review (ITR)

The RAHM deliverable document receives an ITR prior to final delivery to the client.

5.3.5 Model Assessment

A formal assessment of the computer codes used in a specific study is conducted. The assessment will ensure the team is implementing and following the procedures that have been developed to:

1) enhance the control of changes to the system
2) test program changes prior to their use
3) verify the accuracy of results prior to forwarding them to other task segments.

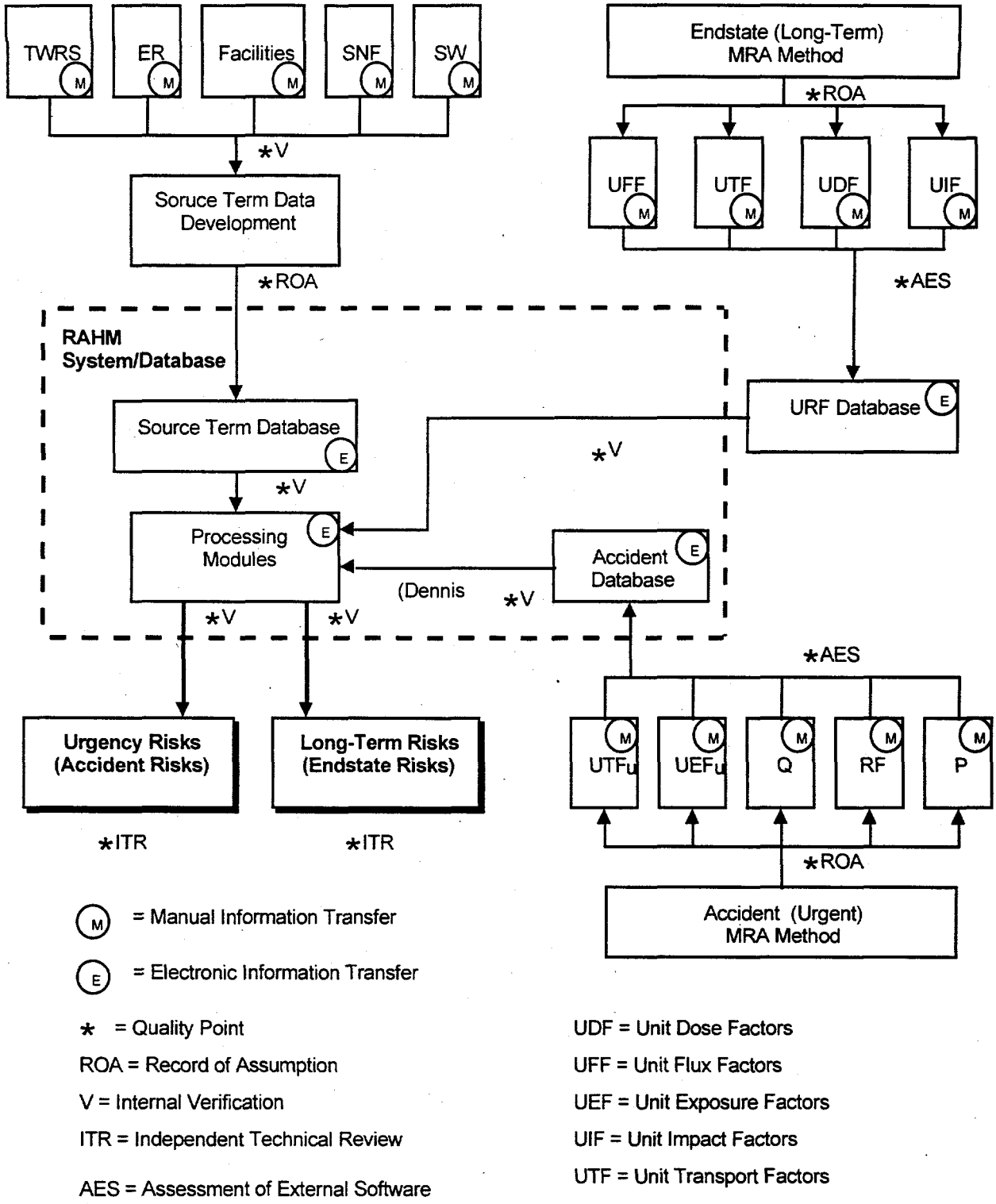

Figure 5.1. Information Flow and Quality Points

6.0 References

Craig, DK, JS Davis, LG Lee, PJ Lein, and PW Hoffman. 1994. *Toxic chemical hazard classification and risk acceptance guidelines for use in DOE facilities*. WSRC-MS-92-206, Rev. 2, Westinghouse Savannah River Company, Aiken, SC.

Gifford, FA, Jr. 1961. "Use of routine meteorological observations for estimating atmospheric dispersion." *Nuclear Safety* 2:4:45-57.

Gifford, FA, Jr. 1968. "An outline of theories of diffusion in the lower layers of the atmosphere." *In Meteorology and Atomic Energy-1968*, ed. D.H. Slade, pp. 66-116. U.S. Atomic Energy Commission, Report TID-24190, National Information Service.

Holdren GR, CS Glantz, LK Berg, K Delinger, SM Goodwin, JR Rustad, R Schalla, and JA Schramke. 1994. *Environmental Settings for Selected U.S. Department of Energy Installations -- Support Information for the Programmatic Environmental Impact Statement*. PNL-10180, Pacific Northwest Laboratory, Richland, Washington.

International Commission on Radiological Protection (ICRP). 1991. *1990 recommendations of the International Commission on Radiological Protection*. Annals of the ICRP, vol. 21, No. 1-3, ICRP Publication 60, Pergamon Press, New York.

International Commission on Radiological Protection (ICRP). 1975. *Report of the Task Group on Reference Man*. ICRP Publication 23, Pergamon Press, New York.

International Commission on Radiological Protection (ICRP). 1983. *Radionuclide Transformations - Energy and Intensity of Emissions*. Vol. 11-13, ICRP Publication 38, Pergamon Press, New York.

Pasquill, F. 1961. "The estimation of the dispersion of windborne material." *Meteorology Magazine* 90, pp. 33-49.

Pasquill, F. 1974. *Atmospheric Diffusion*. 2nd ed. John Wiley and Sons, New York.

Pacific Northwest Laboratory. 1995. "Independent technical review." In *Procedures For Quality Assurance Program*, PNL-MA-70, Section PAP-70-604, Pacific Northwest Laboratory, Richland, Washington.

Schramke, JA, CS Glantz, and GR Holdren. 1994. *Hanford Site environmental setting data developed for the unit risk factor methodology in support of the programmatic environmental impact statement (PEIS)*. PNL-9801, Pacific Northwest Laboratory, Richland, Washington.

Streile, GP, KD Shields, JL Stroh, LM Bagaasen, G Whelan, JP McDonald, JG Droppo, and JW Buck. 1996. *The multimedia environmental pollutant assessment system (MEPAS):*

Source-term release formations. PNNL-11248, Pacific Northwest National Laboratory, Richland, Washington.

Strenge, DL, and PJ Chamberlain II. 1994. *Evaluation of unit risk factors in support of the Hanford remedial action environmental impact statement*. PNL-10190, Pacific Northwest Laboratory, Richland, Washington.

Sutton, OG. 1932. "A theory of eddy diffusion in the atmosphere." *In Proceedings of the Royal Society (London)*, Series A, 135, p 143.

U.S. Department of Energy (DOE). 1994. *Hanford remedial action draft environmental impact statement, volumes I and II*. U.S. Department of Energy, Washington, DC.

U.S. Environmental Protection Agency. 1988. *Superfund exposure assessment manual*. OSWER Directive 9285.5-1, Office of Remedial Response, Office of Solid Waste and Emergency Response, U.S. Environmental Protection Agency, Washington, DC.

Westinghouse Hanford Company (WHC). 1995. *Safety analysis manual*. WHC-CM-4-46, Section 7.0, Rev. 4, Westinghouse Hanford Company, Richland, Washington.

Whelan, G, JW Buck, KJ Castleton, JP McDonald, C Sato, GM Gelston, A deHamer, RJ Serne, SK Wurstner, and RN Kickert. 1995. *Unit environmental transport assessment of contaminants from Hanford's past-practice waste sites*. PNL-10233, Pacific Northwest National Laboratory, Richland, Washington.

Whelan, G, JW Buck, A Nazarali. 1994. "Modular risk analysis for assessing multiple waste sites." PNL-SA-24239, Pacific Northwest National Laboratory, Richland, Washington.

Appendix A

Records of Assumption (ROAs)

Record of Assumption (ROA) Memorandum

TO: File

FROM: Dennis Strenge

DATE: September 4, 1996

ROA No.:

SUBJECT: Urgency Analysis: ERPG Values

The following table contains available ERPG values for the chemicals identified for the RAHM urgency task.

Acute Toxicity Values

Chemical Name	PEL-TWA mg/m^3	ERPG-1 mg/m^3	ERPG-2 mg/m^3	ERPG-3 mg/m^3
Acetonitrile	3 (c)	3 (c)	20 (c)	60 (c)
Acrolein	0.23 (a)	0.23 (a)	1.2 (a)	7 (a)
Aluminum (ion)	2 (d)	6 (i)	10 (h)	-
Ammonia (vapor)	25 ppm (g) 17.4 (a)	25 ppm 17.4 (a)	200 ppm 139 (a)	1000 ppm 695 (a)
Ammonia (NH_4OH)	0.46 (c)	0.46 (c)	9.2 (c)	23 (c)
Arsenic ion	0.01 (c)	0.1 (c)	7 (c)	40 (c)
Barium	0.5 (d)	1.5 (i)	2.5 (h)	250 (l)
Benzo(a)pyrene	carcinogen	-	-	-
Beryllium ion	0.002 (b,c)	0.006 (b,c)	0.025 (a,b,c)	0.100 (a,b,c)
Cadmium	0.005 (d)	0.2 (a)	1.0 (a)	10 (a)
Calcium oxide	5 (d)	15 (i)	25 (h)	25 (l)
Carbon disulfide	3.2 (m)	3.2 (a)	160 (a)	1600 (a)
Carbon tetrachloride	2 ppm (b) 13	20 ppm (a,b) 130	100 ppm (a,b) 630	750 ppm (a,b) 4700
Chlorine gas	1.5 (j)	1 ppm (a) 3	3 ppm (a) 9	20 ppm (a) 59
Chlorobenzene	350 (d)	1100 (i)	1800 (h)	4700 (l)

Chloroform	240 (d)	500 (a)	5000 (a)	25,000 (a)
Cellulosics (cellulose)	15 (d)	45 (i)	75 (h)	75 (n)
Chromium III ion	0.5 (c)	2.6 (c)	51.5 (c)	129 (c)
Chromium VI ion	0.5 (c)	2.6 (c)	51.5 (c)	129 (c)
Chrysene	carcinogen	-	-	-
Copper ion	1 (d)	3 (i)	5 (h)	No value
Cyanide ion	5 (c)	5 (c)	10 ppm HCN (a) 11 41 (c)	25 ppm HCN (a) 27 200 (c)
Dichloromethane	1800 (d)	5300 (i)	8800 (h)	18,000 (l)
EDTA (f)	non toxic	-	-	-
Fluorine (gas)	0.2 (d)	0.6 (i)	1.0 (h)	40 (l)
Fluoride (ion)	2.5 (d)	7.5 (i)	12.5 (h)	12.5 (n)
Hydrazine	0.8 (m)	0.8 (o)	0.8 (a)	10 (a)
Hydrogen chloride	2.5 (k)	3 ppm (a) 4.5	20 ppm (a) 30	100 ppm (a) 150
Hydrogen fluoride	2.5 (d)	3.9 (a)	15.5 (a)	39 (a)
Kerosene	37 (c)	37 (c)	1450 (c)	7330 (c)
Lead ion	0.1 (d)	0.3 (i)	0.5 (h)	No value
Mercury ion	0.05 (c)	0.075 (c)	0.10 (c)	14 (c)
Nitrate ion	(e)	-	-	-
Nitric acid	2 ppm (j) 5.2	2 ppm (a) 5.2	25 ppm (a) 64	50 ppm (a) 130
Nitrite ion	(e)	-	-	-
Nitrobenzene	5 (d)	15 (i)	25 (h)	1000 (l)
PCBs (General)	0.001 (d)	carcinogen	carcinogen	-
Phosphate ion	(e)	-	-	-
Polystyrene	430 (d)	1300 (i)	2200 (h)	3000 (l)
Potassium hydroxide	2.8 (m,p)	2.8 (p)	56 (p)	140 (p)
Pyridine	15 (d)	45 (i)	75 (h)	3300 (l)

Sodium ion	(e)	-	-	-
Sodium hydroxide	2 mg/m^3 (d)	2 mg/m^3 (a)	40 mg/m^3 (a)	100 mg/m^3 (a)
Silver (ion) chloride	0.01 (j)	0.03 (i)	0.05 (h)	No value
Toluene	100 ppm (b) 380	150 ppm (b) 570	200 ppm (b) 750	2000 ppm (b) 7500
Tributyl phosphate	2.5 (c)	3 (a,c)	15 (a,c)	50 (a,c)
Trichloroethylene	50 ppm (b) 270	100 ppm (b) 540	500 ppm (b) 2700	1000 ppm (b) 5400
Triethylamine	100 (d)	300 (i)	500 (h)	840 (l)
Uranium ion	0.2 (b,c)	1 (a,c)	10 (a,c)	20 (a,c)

(a) HANINFO. 1995. A file of ERPG values for use at Hanford is maintained by staff of HEHF on the HANINFO network. The latest revision is July 1995 (as of September 1996).

(b) Craig, D.K., J.S. Davis, L.G. Lee, P.J. Lein. and P. W. Hoffman. 1994. "Toxic Chemical Hazard Classification and Risk Acceptance Guidelines for Use in D.O.E. Facilities". WSRC-MS-92-206 Rev. 2. Westinghouse Savannah River Company, Aiken, SC.

(c) WHC. Tank Waste Remediation System. WHC-SD-WM-SAR-065 REV 0. Westinghouse Hanford Company, Richland, WA.

(d) NIOSH: Pocket Guide to Chemical Hazards. National Institute for Occupational Safety and Health, Cincinnati OH. Micromedex, Inc. Vol. 30 (Expires 10/31/1996), Englewood, CO.

(e) These pollutants are considered essential nutrients and are not expected to be released in quantities large enough to cause health impacts.

(f) This compound is a chelating agent used to treat intakes of uranium and is not considered toxic for the expected released quantities.

(g) Conversion from units of ppm to mg/m^3 is as follows:
(mg/m^3) = (ppm) (MW) / 24.45
MW = molecular weight

(h) The ERPG-2 value is estimated as 5 times the TLV-TWA value as recommended by reference (b)

(i) The ERPG-1 value is estimated as 3 times the TLV-TWA value as recommended by reference (b)

(j) ACGIH. 1991-1992. Threshold Limit Values for Chemical substances and Physical Agents and Biological Exposure Indices. American Conference of Governmental Industrial Hygienists. Cincinnati, OH.

(k) Value is 1/3 of NIOSH PEL-STEL as per reference (b)

(l) The ERPG-3 value is set to the NIOSH IDLH value as per reference (b).

(m) The PEL-TWA level is set equal to the ERPG-1 value because the EPRG-1 value is less than the published PEL-TWA value.

(n) The ERPG-3 level is set equal to the ERPG-2 value because no EPRG-3 value is (or IDLH) was available.

(o) The ERPG-1 value is set to the ERPG-2 value because no ERPG-1 was available and the PEL-TWA value was greater than the ERPG-2 value.

(p) The values for potassium hydroxide are based on values for sodium hydroxide with correction for molecular weight differences.

Record of Assumption (ROA) Memorandum

TO: File

FROM: Dennis Strenge

DATE: April 22, 1996

ROA No.:

SUBJECT: Agricultural Scenario Description

The exposure pathways for the agricultural scenario are those defined by HSRAM, plus resuspension of soil (inhalation), swimming water ingestion, and external pathways for air and swimming. The resuspension of the soil pathway is included to allow for inhalation exposure of soil contaminants. Swimming water ingestion is included to cover the possible case where surface water is not used for drinking water. The swimming external pathway is included for radionuclides because it involves direct contact with the water. The air external pathway is included because Kr-85, a noble gas, may be included in the list of radionuclides to be evaluated. Game ingestion is not included in the RAHM analysis because meat ingestion is included at a much higher ingestion rate and would dominate the health impacts.

The exposure pathways included for the agricultural scenario for each medium are indicated in Table 1.

Agricultural Scenario Parameter Values

All RME exposure analyses for the agricultural scenario are based on exposure during a 30 year period. For dermal contact with soil, ingestion of soil and water, and air inhalation pathways, the health impacts are evaluated for a "composite" individual who is assumed to be a child for 6 years and an adult for 24 years. The exposed individual is assumed to be involved in recreational activities (swimming, boating, and shoreline use) for 7 days per year. The fruit, vegetable, beef, and milk pathways are evaluated for all media, therefore, parameter values are included in Table 2 for general parameter values. Game ingestion is not included because the beef ingestion rate is much higher than the game ingestion rate and would dominate the calculated risk.

Table 1. Agricultural Scenario Exposure Pathways

Exposure Pathway	Soil (mass)	Soil (area)	Air	Ground Water	Surface Water	Pathway Number
Soil ingestion	yes	yes	-	-	-	14
Soil dermal	yes	yes	-	-	-	15
Soil external	yes	yes	-	-	-	23
Soil resuspension	yes	yes	-	-	-	19
Air inhalation	-	-	yes	-	-	18
Air external	-	-	yes	-	-	24
Shower dermal	-	-	-	yes	yes	2
Shower ingestion	-	-	-	yes	yes	3
Shower inhalation	-	-	-	yes	yes	17
Water ingestion	-	-	-	yes	yes	1
Swimming dermal	-	-	-	-	yes	11
Swimming ingestion	-	-	-	-	yes	10
Swimming external	-	-	-	-	yes	20
Shoreline dermal	-	-	-	-	yes	12
Shoreline ingestion -	-	-	-	yes		13
Boating external	-	-	-	-	yes	21
Shoreline external	-	-	-	-	yes	22
Fish ingestion	-	-	-	-	yes	8
Fruit ingestion	yes	yes	yes	yes	yes	5
Vegetabling.	yes	yes	yes	yes	yes	4
Meat ingestion	yes	yes	yes	yes	yes	6
Milk ingestion	yes	yes	yes	yes	yes	7

Table 2. General Exposure Parameter Values for Agricultural Scenario Pathways

Parameter	RME Values
Exposure Duration	30 years
Body Weight	70 kg
Frequency (general)	1.000 (365.25/365.25)
Frequency (swimming)	0.0192 (7/365.25)
Frequency (soil dermal)	0.493 (180/365.25)
Fruit ingestion	0.042 kg/d
Vegetable ingestion	0.080 kg/d
Meat ingestion	0.075 kg/d
Milk ingestion	0.3 L/d

The application of the composite individual approach to specific pathways is as defined in Table 3.

Specific parameter values for each exposure pathway for the agricultural scenario are indicated in the following sections.

Table 3. Individual Representations for the Agricultural Scenario

Exposure Pathway	Noncarcinogenic-carcinogenic Chemicals	Carcinogenic Chemicals	Radionuclides
Soil ingestion	Composite	Composite	Composite
Soil dermal	Composite	Composite	Adult
Soil external	NA	NA	Adult
Soil resuspension	Composite	Adult	Adult
Air inhalation	Composite	Adult	Adult
Air external	NA	NA	Adult
Shower dermal	Adult	Adult	Adult
Shower inhalation	Adult	Adult	Adult
Shower ingestion	Adult	Adult	Adult
Water ingestion	Composite	Adult	Adult
Swimming dermal	Adult	Adult	Adult
Swimming ingestion	Adult	Adult	Adult
Swimming external	NA	NA	Adult
Shoreline dermal	Composite	Composite	Adult
Shoreline ingestion	Composite	Composite	Composite
Boating external	NA	NA	Adult
Shoreline external	NA	NA	Adult
Fish ingestion	Adult	Adult	Adult
Fruit ingestion	Adult	Adult	Adult
Vegetable ingestion	Adult	Adult	Adult
Meat ingestion	Adult	Adult	Adult
Milk ingestion	Adult	Adult	Adult

Soil Related Pathways

The individuals are assumed to ingest soil at an average rate of 200 mg/d as a child and 100 mg/d as an adult. Dermal exposures are evaluated for skin contamination over 2,500 cm^2 as a child and 5,000 cm^2 as an adult. One contact event is assumed to occur each day. Soil adheres to the skin at a rate of 0.2 mg/cm^2. External radiation exposure to contaminated soil occurs for 24 hr/d and is reduced by a shielding factor of 0.8. The individual breathes air at a rate of 10 m^3/d as a child and 20 m^3/d as an adult, while exposed to suspended or resuspended contamination from soil.

Air Related Pathways

The individual breathes air at a rate of 10 m^3/d as a child and 20 m^3/d as an adult. External exposure to airborne radionuclides is evaluated for a period of 24 hours per day, consistent with the external exposure analysis for soil external exposure.

Water Related Pathways

The individual drinks water at a rate of 1 L/d as a child and 2 L/d as an adult, and takes one shower per day lasting a period of 0.17 hours (10 minutes). While showering, the individual ingests water at the rate of 0.06 L/hr. The contact area with water while showering or swimming is 20,000 cm^2. The individual breathes at a rate of 15 m^3/d (used for exposure to volatile compounds released from water while showering). The individual swims for 2.6 hr/d. The individual is assumed to ingest fish from contaminated waters at the rate of 27 g/d.

Record of Assumption (ROA) Memorandum

TO: File

FROM: Dennis Strenge

DATE: April 16, 1996

ROA No.:

SUBJECT: Summary Intake Factors for Unit Exposure Factor Analysis for the Agricultural Scenario

Agricultural Scenario Summary Intake Factors

The agricultural exposure scenario is based on exposures over a 30-year exposure duration. Evaluation of unit exposure factors for the agricultural scenario is described in the following sections for each exposure pathway for each medium.

Medium: Soil (mass)

The agricultural scenario exposure pathways for soil (per unit mass) are: soil ingestion, soil dermal absorption, soil resuspension and inhalation, and external exposure to ground contamination.

The soil ingestion pathway is evaluated for a daily soil ingestion rate of 200 mg/d for a child (6 years) and 100 mg/d for an adult (24 years). The soil dermal contact pathway is evaluated for one contact event per day, a skin contact area of 2,500 cm^2 for a child (6 years) and 5,000 cm^2 for an adult (24 years), a soil adherence factor of 0.2 mg/cm^2. Resuspension of soil with subsequent inhalation is evaluated using the mass loading method with an assumed soil air concentration of 50 $\mu m/m^3$. The inhalation rate is set to 20 m^3/d and the exposure duration is 30 years (as an adult). External exposure is assumed to occur 24 hours a day. A shielding factor of 0.8 is applied as per HSRAM recommendations. All pathways occur 365 days per year, except soil dermal contact which occurs only 180 days per year.

The SIF values for this medium are given in Table 1 for each pollutant type and exposure pathway.

Table 3. Agricultural Scenario Summary Intake Factors: Soil (mass)

Exposure Pathway	Type[a]	SIF Value	Units
Soil ingestion	NC	3.64E-6	kg/(kg d)
	CC	1.56E-6	kg/(kg d)
	RA	1.32E+0	kg
Soil dermal absorption	NC	8.71E-6	kg/(kg d)
	CC	3.73E-6	kg/(kg d)
	RA	5.40E+0	kg
Soil resuspension	NC	1.76E-8	kg/(kg d)
	CC	6.12E-9	kg/(kg d)
	RA	1.10E-2	kg
Soil external	RA	2.10E+5	h
Vegetable ingestion	NC	1.14E-3	kg/(kg d)
	CC	4.90E-4	kg/(kg d)
	RA	8.77E+2	kg
Fruit ingestion	NC	6.00E-4	kg/(kg d)
	CC	2.57E-4	kg/(kg d)
	RA	4.60E+2	kg
Meat ingestion	NC	1.07E-3	kg/(kg d)
	CC	4.59E-4	kg/(kg d)
	RA	8.22E+2	kg
Milk ingestion	NC	4.29E-3	L/(kg d)
	CC	1.84E-3	L/(kg d)
	RA	3.29E+3	L

(a) NC - non-carcinogenic chemicals, CC - carcinogenic chemicals, RA - radionuclides

Medium: Soil (area)

Contamination deposited onto soil from atmospheric transport and deposition is modeled as a concentration per unit area of soil. The agricultural scenario URFs for this medium are evaluated for the same pathways as the soil per unit mass medium analyses plus ingestion of fruit, vegetables, meat, and milk.

The exposure parameters are the same as those defined for the soil (mass) medium, except for the resuspension pathway. This pathway is evaluated using the resuspension factor approach with the analysis set up to give an air concentration equivalent to 50 $\mu m/m^3$ of soil in air. The effective resuspension factor is 8.33×10^{-10} m^{-1}. The vegetable ingestion pathway is modeled in the HAZDK analyses as "leafy vegetables" with a daily ingestion rate of 80 g/d (as recommended in HSRAM). The fruit ingestion pathway is modeled as "other vegetables" with a daily ingestion rate of 42 g/d. The SIF values for each pathway for this medium are given in Table 2 for each pollutant type.

Table 2. Agricultural Scenario Summary Intake Factors: Soil (area)

Exposure Pathway	Type[a]	SIF Value	Units
Soil Ingestion	NC	6.07E-8	m^2/(kg d)
	CC	2.60E-8	m^2/(kg d)
	RA	2.19E-2	m^2
Soil Dermal	NC	1.45E-7	m^2 ev/(kg d)
	CC	6.22E-8	m^2 ev/(kg d)
	RA	9.00E-2	m^2 ev
Soil Resuspension	NC	2.95E-10	m^2/(kg d)
	CC	1.02E-10	m^2/(kg d)
	RA	1.83E-4	m^2
Vegetable ingestion	NC	1.14E-3	kg/(kg d)
	CC	4.90E-4	kg/(kg d)
	RA	8.77E+2	kg
Fruit ingestion	NC	6.00E-4	kg/(kg d)
	CC	2.57E-4	kg/(kg d)
	RA	4.60E+2	kg
Meat ingestion	NC	1.07E-3	kg/(kg d)
	CC	4.59E-4	kg/(kg d)
	RA	8.22E+2	kg
Milk ingestion	NC	4.29E-3	L/(kg d)
	CC	1.84E-3	L/(kg d)
	RA	3.29E+3	L
Soil External	RA	2.10E+5	h

(a) NC - non-carcinogenic chemicals, CC - carcinogenic chemicals, RA - radionuclides

Medium: Air

Agricultural scenario URFs for air are evaluated for inhalation, external exposure from submersion in the cloud, and consumption of fruits, vegetables, meat, and milk. The air inhalation rate is set to 20 m^3 for the adult and external exposure occurs for 24 hours per day. Inhalation and external exposure occurs for 365 days per year. The vegetable ingestion pathway is modeled in the analyses as "leafy vegetables" with a daily ingestion rate of 80 g/d (as recommended in HSRAM). The fruit ingestion pathway is modeled as "other vegetables" with a daily ingestion rate of 42 g/d. The daily ingestion rate for meat is 75 g/d and the ingestion rate for milk is 300 g/d. All pathways occur 365 days per year, except soil dermal contact which occurs only 180 days per year. The SIF values for each pathway for this medium are given in Table 3 for each pollutant type.

Table 3. Agricultural Scenario Summary Intake Factors: Air

Exposure Pathway	Type[a]	SIF Value	Units
Inhalation	NC	3.54E-1	m^3/(kg d)
	CC	1.22E-1	m^3/(kg d)
	RA	2.19E+5	m^3
Air external dose	RA	2.63E+5	hr
Vegetable ingestion	NC	1.14E-3	kg/(kg d)
	CC	4.90E-4	kg/(kg d)
	RA	8.77E+2	kg
Fruit ingestion	NC	6.00E-4	kg/(kg d)
	CC	2.57E-4	kg/(kg d)
	RA	4.60E+2	kg
Meat ingestion	NC	1.07E-3	kg/(kg d)
	CC	4.59E-4	kg/(kg d)
	RA	8.22E+2	kg
Milk ingestion	NC	4.29E-3	L/(kg d)
	CC	1.84E-3	L/(kg d)
	RA	3.29E+3	L

(a) NC - non-carcinogenic chemicals, CC - carcinogenic chemicals, RA - radionuclides

Medium: Groundwater

Use of contaminated groundwater in the agricultural scenario includes drinking water, showering, and ingestion of fruits, vegetables, meat, and milk 365 days per year. The

exposure pathways involved in these uses are: drinking water, shower water dermal absorption, shower water ingestion, indoor inhalation of volatile compounds, and ingestion of homegrown fruit, vegetables, meat, and milk. Individuals are assumed to drink 2 L of contaminated water and take 1 shower of 10 minute duration per day. The inhalation rate is 15 m^3/d and the indoor air volatilization factor is 0.5 for volatile chemicals and 0.1 for Rn222. Dermal exposure is evaluated for a skin area of 20,000 cm^2 and inadvertent ingestion involves intake of 0.01 L of water per shower. The vegetable ingestion pathway is modeled in the HAZDK analyses as "leafy vegetables" with a daily ingestion rate of 80 g/d (as recommended in HSRAM). The fruit ingestion pathway is modeled as "other vegetables" with a daily ingestion rate of 42 g/d. The daily ingestion rate for meat is 75 g/d and the ingestion rate for milk is 300 g/d. All pathways occur 365 days per year. The SIF values for each pathway for this medium are given in Table 4 for each pollutant type.

Table 6. Agricultural Scenario Summary Intake Factors: Groundwater

Exposure Pathway	Type[a]	SIF Value	Units
Water ingestion	NC	3.54E-2	L/(kg d)
	CC	1.22E-2	L/(kg d)
	RA	2.19E+4	L
Water dermal absorption	NC	4.86E-2	L h/(kg d cm)
	CC	2.08E-2	L h/(kg d cm)
	RA	3.73E+4	L h/cm
Shower water Ingestion	NC	1.46E-4	L/(kg d)
	CC	6.24E-5	L/(kg d)
	RA	1.12E+2	L
Indoor inhalation	NC	1.07E-1	L/(kg d)
	CC	4.59E-2	L/(kg d)
	RA	1.64E+4	L
Vegetable ingestion	NC	1.14E-3	kg/(kg d)
	CC	4.90E-4	kg/(kg d)
	RA	8.77E+2	kg
Fruit ingestion	NC	6.00E-4	kg/(kg d)
	CC	2.57E-4	kg/(kg d)
	RA	4.60E+2	kg
Meat ingestion	NC	1.07E-3	kg/(kg d)
	CC	4.59E-4	kg/(kg d)
	RA	8.22E+2	kg
Milk ingestion	NC	4.29E-3	L/(kg d)
	CC	1.84E-3	L/(kg d)
	RA	3.29E+3	L

(a) NC - non-carcinogenic chemicals, CC - carcinogenic chemicals, RA - radionuclides

Medium: Surface Water

Unit exposure factors for surface water are evaluated in the agricultural scenario for ingestion of drinking water, showering, ingestion of fish, exposure related to aquatic recreational activities, and ingestion of fruit, vegetables, meat, and milk. All exposure pathways are assumed to occur 365 days per year, except aquatic recreational pathways that occur 7 days per year.

The exposed individual is assumed to drink 2 L of contaminated water per day. The inhalation rate is 15 m^3/d and the indoor air volatilization factor is 0.5 for volatile chemicals and 0.1 for Rn222. Dermal exposure is evaluated for a skin area of 20,000 cm^2 and inadvertent ingestion involves intake of 0.01 L of water per shower. The exposure time for aquatic recreational activities is 2.6 hr/d each (boating, swimming, and shoreline activities). Dermal exposure while swimming is evaluated for a skin area of 20,000 cm^2. Dermal exposure to shoreline sediment is evaluated for a skin area of 2,500 cm^2 (6 years as a child) and 5,000 cm^2 (24 years as an adult). Inadvertent ingestion of shoreline sediment is based on an ingestion rate of 200 mg/d for 6 years (child) and 100 mg/d for 24 years (adult). The vegetable ingestion pathway is modeled in the HAZDK analyses as "leafy vegetables" with a daily ingestion rate of 80 g/d (as recommended in HSRAM). The fruit ingestion pathway is modeled as "other vegetables" with a daily ingestion rate of 42 g/d. The daily ingestion rate for meat is 75 g/d and the ingestion rate for milk is 300 g/d. The exposed individual catches enough fish from the contaminated surface water body to ingest 27 g/d edible fish each day of the year. The SIF values for each pathway for this medium are given in Table 5 for each pollutant type.

Table 5. Agricultural Scenario Summary Intake Factors: Surface Water

Exposure Pathway	Type[a]	SIF Value	Units
Water ingestion	NC	3.54E-2	L/(kg d)
	CC	1.22E-2	L/(kg d)
	RA	2.19E+4	L
Water dermal absorption	NC	4.86E-2	L h/(kg d cm)
	CC	2.08E-2	L h/(kg d cm)
	RA	3.73E+4	L h/cm
Shower water Ingestion	NC	1.46E-4	L/(kg d)
	CC	6.24E-5	L/(kg d)
	RA	1.12E+2	L
Indoor inhalation	NC	1.07E-1	L/(kg d)
	CC	4.59E-2	L/(kg d)
	RA	1.64E+4	L
Fish ingestion	NC	3.86E-4	L/(kg d)
	CC	1.65E-4	L/(kg d)
	RA	2.96E+2	L
Swimming dermal absorption	NC	1.43E-2	L h/(kg d cm)
	CC	6.11E-3	L h/(kg d cm)
	RA	1.09E+4	L h/cm

Swimming water Ingestion	NC	3.57E-5	L/(kg d)
	CC	1.53E-5	L/(kg d)
	RA	2.74E+1	L
Swimming external dose	RA	5.46E+2	h
Shoreline dermal absorption	NC	3.39E-7	kg ev / (kg d)
	CC	1.45E-7	kg ev / (kg d)
	RA	2.10E-2	kg ev

Exposure Pathway	Type[a]	SIF Value	Units
Shoreline sediment ingestion	NC	6.98E-8	kg/(kg d)
	CC	2.99E-8	kg/(kg d)
	RA	2.52E-2	kg
Shoreline external dose	RA	1.09E+2	h
Boating external dose	RA	2.73E+2	h
Vegetable ingestion	NC	1.14E-3	kg/(kg d)
	CC	4.90E-4	kg/(kg d)
	RA	8.77E+2	kg
Fruit ingestion	NC	6.00E-4	kg/(kg d)
	CC	2.57E-4	kg/(kg d)
	RA	4.60E+2	kg
Meat ingestion	NC	1.07E-3	kg/(kg d)
	CC	4.59E-4	kg/(kg d)
	RA	8.22E+2	kg
Milk ingestion	NC	4.29E-3	L/(kg d)
	CC	1.84E-3	L/(kg d)
	RA	3.29E+3	L

(a) NC - non-carcinogenic chemicals, CC - carcinogenic chemicals, RA - radionuclides

Record of Assumption (ROA) Memorandum

TO: File

FROM: Dennis Strenge

DATE: April 16, 1996

ROA No.:

SUBJECT: Unit Exposure Factor Description and Pathways for the Agricultural Scenario

Scenarios and Media

The HSRAM agricultural scenario was used as the basis for the UEF evaluations. This scenario is evaluated for five transport media determined to be necessary for the GIS analysis: 1) soil defined per unit mass, 2) soil defined per unit area, 3) groundwater from wells, 4) surface water, and 5) air. These are the primary media for which pollutant concentrations are estimated. Other media are identified in HSRAM (biota and sediment), but are not specifically identified for representation. These other media are considered in the unit exposure factor analyses as appropriate to the scenario and exposure pathways. For example, ingestion of agricultural products (referred to as biota in HSRAM) is included for use of contaminated water for irrigation of crops. In such cases the secondary media concentration is evaluated using mathematical models in MEPAS, and the risk from the secondary media is included in the units risk factors for the primary media.

Agricultural Scenario

Use of land for agricultural production is represented by this scenario. The scenario is intended to represent potential exposures to an individual who may take up residence on the Hanford Site in the future. The exposures are described as occurring continuously throughout the year (except for surface water recreational activities). The pathways described in HSRAM are included, plus a few other related pathways. All of the media have potential for exposure of the agricultural individual. Exposure parameters are selected to represent the continuous exposure by each pathway, as shown in Table 1.

Table 1. Exposure Pathways Included in Agricultural Scenario URF Analyses

Medium	Exposure Pathway	Chemicals	Radionuclides
Soil (mass)	Soil ingestion	yes	yes
	Soil dermal absorption	yes	yes
	Soil resuspension inhalation	yes	yes
	External ground dose	no	yes
Soil (area)	Fruit ingestion	yes	yes
	Vegetable ingestion	yes	yes
	Meat ingestion	yes	yes
	Milk ingestion	yes	yes
	Soil dermal absorption	yes yes	
	Soil ingestion	yes	yes
	Soil resuspension	yes	yes
	External ground dose	no	yes
Air	Fruit ingestion	yes	yes
	Vegetable ingestion	yes	yes
	Meat ingestion	yes	yes
	Milk ingestion	yes	yes
	Inhalation	yes	yes
	External air dose	no	yes
Groundwater	Drinking water ingestion	yes	yes
	Shower dermal absorption	yes	yes
	Shower water ingestion	yes	yes
	Fruit ingestion	yes	yes
	Vegetable ingestion	yes	yes
	Meat ingestion	yes	yes
	Milk ingestion	yes	yes
	Indoor inhalation of VOCs	yes	Rn222 only
Surface water	Drinking water ingestion	yes	yes
	Shower dermal absorption	yes	yes
	Shower water ingestion	yes	yes
	Fruit ingestion	yes	yes
	Vegetable ingestion	yes	yes
	Meat ingestion	yes	yes
	Milk ingestion	yes	yes
	Fish ingestion	yes	yes
	Swimming water ingestion	yes	yes
	Swimming dermal absorption	yes	yes
	Swimming external dose	no	yes
	Shoreline dermal absorption	yes	yes
	Shoreline sediment ingestion	yes	yes
	Shoreline external dose	no	yes
	Boating external dose	no	yes
	Indoor inhalation of VOCs	yes	Rn222 only

Unit Exposure Factor Units

The unit exposure factors involve normalization to unit concentration of a pollutant in each of the five media. The units of normalization are indicated in Table 2.

Table 2. Media Normalization Units

Medium	Chemicals	Radionuclides
Soil (mass)	mg/kg	pCi/kg
Soil (area)	mg/m^2	pCi/m^2
Air	mg/m^3	pCi/m^3
Groundwater	mg/L	pCi/L
Surface water	mg/L	pCi/L

Record of Assumption (ROA) Memorandum

TO: File

FROM: Dennis Strenge

DATE: September 4, 1996

ROA No.:

SUBJECT: Worker Unit Transport Factor Description for the Accident Scenario

Accident scenarios are evaluated for involved workers and for the public. The health impact estimates for involved workers requires an estimate of the air concentration the worker is exposed to during the course of the accident. This parameter is the unit transport factor for workers. For chemicals, the UTF is expressed as the inverse of the volume in which the material is diluted and for radionuclides, the UTF is the time integral of air concentration (normalized to unit release). The evaluation of UTFs requires assumptions regarding the volume in which the released material is diluted and the time over which the exposure occurs. The following "standard" cases have been developed to be applied to the various scenarios identified. A range of exposure times and volumes are suggested to account for various situations postulated in the accident scenarios.

Small Spills and Releases

This category of accident is used for scenarios involving small releases with relatively small energy driving forces (e.g. spills, drops, small earthquakes, and small fires). The worker is assumed to either not be aware of the accident or not evacuate immediately. No credit is taken for protective equipment (e.g., respirators). The worker is assumed to be exposed for 15 minutes and then leave the area of contamination. A nominal volume of 100 m^3 is used as the dilution volume representing the volume of a large vault or room. The radionuclide UTF for this situation is 900 sec/100 m^3 = 9 sec/m^3. The chemical UTF for this situation is 1/100 m^{-3} = 0.01 m^{-3}.

If there are no workers in the area in which the accident occurs (e.g. remote handling), then the exposure is assumed to be to a co-located worker outside the building. For this location, a nominal atmospheric dispersion factor of 0.01 sec/m^3 is used for the radionuclide UTF, representing a high value for exposure in the wake of a plume from a building. The chemical UTF for this situation is taken as half the indoor UTF, or 0.005 m^{-3}.

Large Fires

Accidents involving large fires are likely to have lower exposures to workers inside the building for several reasons. The worker is likely to be aware of the fire danger and evacuate immediately. The source material is not likely to be released until the fire has progressed significantly, after the worker has left. The fire products will be diluted in a large volume of air because of the high energy release during the fire (causing drafts and mixing). An estimate of the UTF values for large fires is, therefore, based on an exposure time of 1 minute and a dilution volume of 1000 m^3. The radionuclide UTF for this situation is 60 sec/1000 m^3 = 0.06 sec/m^3. The chemical UTF for this situation is 1/1000 m^{-3} = 0.001 m^{-3}.

If there are no workers in the area in which the fire occurs (e.g. remote handling), then the exposure is assumed to be to a co-located worker outside the building. For this location the radionuclide UTF value is take as half the indoor value, 0.03 sec/m^3. The chemical UTF for this situation is taken as half the indoor UTF, or 0.0005 m^{-3}.

Major Earthquakes

This category is used for major earthquake scenarios that do not involve fires. These scenarios generally involve loss of building containment with release directly to the outdoors. During such an earthquake the worker may be more concerned about his own safety and not aware of releases of hazardous materials. The worker is assumed to be exposed for 15 minutes with the released material being dispersed in a volume of 100 m^3 (same values as used for the small release events). The radionuclide UTF for this situation is 900 sec/100 m^3 = 9 sec/m^3. The chemical UTF for this situation is 1/100 m^{-3} = 0.01 m^{-3}.

If there are no workers in the area in which the release occurs (e.g. unoccupied building), then the exposure is assumed to be to a co-located worker outside the building. For this location, a nominal atmospheric dispersion factor of 0.01 sec/m^3 is used for the radionuclide UTF, representing a high value for exposure in the wake of a plume from a building. The chemical UTF for this situation is taken as half the indoor UTF, or 0.005 m^{-3}.

Appendix B

RAHM Database Structure Information

Near-Term (Urgent) Risk Database Structure

Structure for table: boundary.dbf

Field	Field Name	Type	Width
1	SITE_NAME	Character	60
2	FACILITY	Character	10
3	BND_DIST	Numeric	4
4	DIRECTION	Character	3
** Total **			78

Structure for table: carc_uef.dbf

Field	Field Name	Type	Width
1	CAS_NAME	Character	30
2	INH_SLOPEF	Character	13
3	CARC_UEF	Character	13
** Total **		57	

Structure for table: chem_uef.dbf

Field	Field Name	Type	Width
1	CAS_NAME	Character	30
2	E3_UEFAI	Character	13
3	E2_UEFAI	Character	13
4	E1_UEFAI	Character	13
5	PT_UEFAI	Character	13
** Total **			83

Structure for table: chem_utf.dbf

Field	Field Name	Type	Width
1	DIST	Character	6
2	VOLATILE	Character	14
3	LIQUID	Character	14
4	SOLID	Character	14
** Total **			49

Structure for table: dist_utf.dbf

Field	Field Name	Type	Width
1	DIST	Character	6
2	UTF	Character	10
** Total **			17

Structure for table: inven3.dbf

Field	Field Name	Type	Width
1	SITE_NAME	Character	60
2	FACILITY	Character	10
3	ACCIDENT	Character	90

4	CAS	Character	15
5	CAS_NAME	Character	30
6	INVEN	Character	10
7	INVEN_UNIT	Character	2
8	REF	Character	10
** Total **			228

Structure for table: mat_prop.dbf

Field	Field Name	Type	Width	Dec
1	CAS	Character	9	
2	CONT_NAME	Character	45	
3	AT_NUM	Numeric	3	
4	AT_MASS	Numeric	8	4
5	HALF_LIFE	Numeric	17	4
6	HLIFE_UNIT	Character	1	
7	SPECIF_ACT	Numeric	20	17
8	DEN_LIQUID	Numeric	8	3
9	DEN_SOLID	Numeric	8	3
** Total **			120	

Structure for table: rad_uef.dbf

Field	Field Name	Type	Width
1	CAS	Character	9
2	INH_DFAC	Character	12
3	D_UEFAID	Character	12
4	R_UEFAIC	Character	12
** Total **			46

Structure for table: sites2.dbf

Field	Field Name	Type	Width
1	AREA	Character	9
2	SITE_NAME	Character	60
3	FACILITY	Character	10
4	ACCIDENT	Character	90
5	REL_FRAC	Character	10
6	PROB	Character	12
** Total **			192

Structure for table: wrkrsk.dbf

Field	Field Name	Type	Width
1	FACILITY	Character	10
2	ACCIDENT	Character	90
3	REL_RATIO	Character	11
4	UTF_WRAD	Character	11
5	UTF_WCHEM	Character	11
** Total **			133

Long-Term (Chronic) Risk Database Structure

Structure for table: inven.dbf

Field	Field Name	Type	Width
1	SITE_NAME	Character	20
2	CAS	Character	9
3	CAS_NAME	Character	30
4	INVEN	Character	10
5	INVEN_UNIT	Character	2
6	HRA_EIS_IN	Character	8
7	BEMR_IN	Character	8
8	REF	Character	10
9	REF_NUM	Character	10
10	REF2	Character	10
11	MEDIA	Character	4
** Total **			122

Structure for table: risk.dbf

Field	Field Name	Type	Width
1	AREA	Character	9
2	MEDIA	Character	4
3	SITE_NAME	Character	20
4	CAS	Character	9
5	CAS_NAME	Character	30
6	INVEN	Character	10
7	INVEN_UNIT	Character	2
8	PATHWAY	Character	7
9	CONT_TYPE	Character	4
10	URF	Character	10
11	UNIT	Character	7
12	RISK	Character	10
13	RISKGRP	Character	3
** Total **			126

Structure for table: sites.dbf

Field	Field Name	Type	Width
1	AREA	Character	9
2	MEDIA	Character	4
3	SITE_NAME	Character	20
** Total **			34

Structure for table: urf.dbf

Field	Field Name	Type	Width
1	SITE_NAME	Character	20
2	SOURCE	Character	7
3	MEDIA	Character	7
4	RECEPTOR	Character	7
5	CAS_NAME	Character	30
6	CAS	Character	9
7	PATHWAY	Character	7
8	CONT_TYPE	Character	4
9	UNIT	Character	7
10	URF1	Character	10
11	URF2	Character	10
12	URF3	Character	10
13	URF4	Character	10
14	URF5	Character	10
15	URF6	Character	10
16	URF7	Character	10
17	URF8	Character	10
18	URF9	Character	10
19	URF10	Character	10
20	URF11	Character	10
21	URF12	Character	10
22	URF13	Character	10
23	URF14	Character	10
24	URF15	Character	10
25	URF16	Character	10
26	URF17	Character	10
27	URF18	Character	10
28	URF19	Character	10
29	URF20	Character	10
30	URF21	Character	10
31	URF22	Character	10
32	URF23	Character	10
33	URF24	Character	10
34	URF25	Character	10
35	URF26	Character	10
36	URF27	Character	10
37	URF28	Character	10
38	URF29	Character	10
39	URF30	Character	10
40	URF31	Character	10
41	URF32	Character	10
42	URF33	Character	10
43	URF34	Character	10

44	URF35	Character	10
45	URF36	Character	10
46	URF37	Character	10
47	URF38	Character	10
48	URF39	Character	10
49	URF40	Character	10
50	URF41	Character	10
51	URF42	Character	10
52	URF43	Character	10
53	URF44	Character	10
54	URF45	Character	10
55	URF46	Character	10
56	URF47	Character	10
57	URF48	Character	10
58	URF49	Character	10
59	URF50	Character	10
60	URF51	Character	10
61	URF52	Character	10
62	URF53	Character	10
63	URF54	Character	10
64	URF55	Character	10
65	URF56	Character	10
66	URF57	Character	10
67	URF58	Character	10
68	URF59	Character	10
69	URF60	Character	10
70	URF61	Character	10
71	URF62	Character	10
72	URF63	Character	10
73	URF64	Character	10
74	URF65	Character	10
75	URF66	Character	10
76	URF67	Character	10
77	URF68	Character	10
78	URF69	Character	10
79	URF70	Character	10
80	URF71	Character	10
81	URF72	Character	10
82	URF73	Character	10
83	URF74	Character	10
84	URF75	Character	10
85	URF76	Character	10
86	URF77	Character	10
87	URF78	Character	10
88	URF79	Character	10

89	URF80	Character	10
90	URF81	Character	10
91	URF82	Character	10
92	URF83	Character	10
93	URF84	Character	10
94	URF85	Character	10
95	URF86	Character	10
96	URF87	Character	10
97	URF88	Character	10
98	URF89	Character	10
99	URF90	Character	10
100	URF91	Character	10
101	URF92	Character	10
102	URF93	Character	10
103	URF94	Character	10
104	URF95	Character	10
105	URF96	Character	10
106	URF97	Character	10
107	URF98	Character	10
108	URF99	Character	10
109	URF100	Character	10
110	URF101	Character	10
111	URF102	Character	10
112	URF103	Character	10
113	URF104	Character	10
114	URF105	Character	10
115	URF106	Character	10
116	URF107	Character	10
117	URF108	Character	10
118	URF109	Character	10
119	URF110	Character	10
120	URF111	Character	10
121	URF112	Character	10
122	URF113	Character	10
123	URF114	Character	10
124	URF115	Character	10
125	URF116	Character	10
126	URF117	Character	10
127	URF118	Character	10
128	URF119	Character	10
129	URF120	Character	10
130	URF121	Character	10
131	URF122	Character	10
132	URF123	Character	10
133	URF124	Character	10

134	URF125	Character	10
135	URF126	Character	10
136	URF127	Character	10
137	URF128	Character	10
138	URF129	Character	10
139	URF130	Character	10
140	URF131	Character	10
141	URF132	Character	10
142	URF133	Character	10
143	URF134	Character	10
144	URF135	Character	10
145	URF136	Character	10
146	URF137	Character	10
147	URF138	Character	10
148	URF139	Character	10
149	URF140	Character	10
150	URF141	Character	10
151	URF142	Character	10
152	FILEN	Character	10
** Total **			1529

Appendix C

RAHM Database Data Dictionary

Field Name	Short Description	Field Type	Tables	Long Description
ACCIDENT	Accident Description	C(90)	INVEN3 SITES2 WRKRSK	Accident description
AREA	Hanford Site Area	C(9)	RISK SITES SITES2	Hanford site area identifier. Choices are 100H, 100N, 100K, 200E, 200E, 300, 400, and 600. Alternate choices include 100 and 200 to summarize.
AT_MASS	Atomic Mass	N(8,4)	MAT_PROP	Constituent atomic mass.
AT_NUM	Atomic Number	N(3,0)	MAT_PROP	Constituent atomic number.
BEMR_IN	BEMR inventory	C(8)	INVEN	Constituent inventory as found in BEMR-95.
BND_DIST	Distance to fence line	N(4,0)	BOUNDARY	Minimum distance from facility to fence line boundary based on distance in the 16 cardinal directions (e.g. N, NNE, NE, ...). Units are m.
CARC_UEF	Carc UEF	C(13)	CARC_UEF	Carcinogenic unit exposure factor. Units are risk per mg/m3.
CAS	Constituent Indentifier	C(9)	INVEN INVEN3 MAT_PROP RAD_UEF RISK URF	Constituent Indentifier.
CAS_NAME	Constituent Name	C(30)	CARC_UEF CHEM_TYP CHEM_UEF INVEN INVEN3 RISK URF	Constituent Name.
CONT_NAME	Constituent Name	C(45)	MAT_PROP	Constituent Name.
CONT_TYPE	Constituent Carc/Rad Type	C(4)	RISK URF	Constituent Carc/Rad Type. Choices are Rad, Carc, and Non.
DEN_LIQUID	Liquid Density	N(8,3)	MAT_PROP	Constituent material property. Liquid density is not currently used.
DEN_SOLID	Solid Density	N(8,3)	MAT_PROP	Constituent material property. Solid density is not currently used.
DIRECTION	Direction	C(3)	BOUNDARY	One of the 16 cardinal compass directions (e.g. N, NNE, NE, ...).
DIST	Distance	C(6)	CHEM_UTF DIST_UTF	Radioactive and chemical utf distance in kilometers.
D_UEFAID	Dose UEFaid	C(12)	RAD_UEF	Radiation dose unit exposure factor for acute exposure based on inhalation. Units are rem per Ci*s/m
E1_UEFAI	ERPG1 UEFai	C(13)	CHEM_UEF	1/ERPG1 non-carcinogenic chemical unit exposure factor for acute exposure based on inhalation. Units are m3/mg.
E2_UEFAI	ERPG2 UEFai	C(13)	CHEM_UEF	1/ERPG2 non-carcinogenic chemical unit exposure factor for acute exposure based on

Field Name	Short Description	Field Type	Tables	Long Description
				inhalation. Units are m3/mg.
E3_UEFAI	ERPG3 UEFai	C(13)	CHEM_UEF	1/ERPG3 non-carcinogenic chemical unit exposure factor for acute exposure based on inhalation. Units are m3/mg.
FACILITY	Facility	C(10)	BOUNDARY INVEN3 SITES2 WRKRSK	Facility name.
FILEN	Source file name	C(10)	URF	Source file name for data tracking purposes.
HALF_LIFE	Half-life	N(17,4)	MAT_PROP	Radioactive half-life.
HLIFE_UNIT	Half-life unit	C(1)	MAT_PROP	Radioactive half-life unit. Choices are Y, D, H, M (minutes), or S.
HRA_EIS_IN	HRA EIS inventory	C(8)	INVEN	Constituent inventory as found in the HRA EIS.
INH_DFAC	Inhalation Dose Factor	C(12)	RAD_UEF	Radioactive inhalation dose factor. Units are rem/pCi.
INH_SLOPEF	Inhalation Slope Factor	C(13)	CARC_UEF	Carcinogenic chemical inhalation slope factor. Units are kg*d/mg.
INVEN	Inventory	C(10)	INVEN INVEN3 RISK	Constituent inventory. Units are Ci for radionuclides, g for chemicals.
INVEN_UNIT	Inventory Units	C(2)	INVEN INVEN3 RISK	Inventory units. Choices are Ci for radionuclides, g for chemicals
LIQUID	UTF For Liquid -Type Chemicals	C(14)	CHEM_UTF	Unit transport factors for liquid-type chemicals. Units are mg/m3 per g released.
MEDIA	Media	C(4)	INVEN RISK SITES URF	Inventory source media. Choices are SOIL or BW (buried waste).
MEDIA	Media	C(7)	INVEN RISK SITES URF	Inventory source media. Choices are SOIL or BW (buried waste).
PATHWAY	Pathway	C(7)	RISK URF	Transport pathway from source to receptor. Current choices are GWater and Soil.
PROB	Probability	C(12)	SITES2	Probability of the release for analysis purposes.
PT_UEFAI	PEL-TWA UEFai	C(13)	CHEM_UEF	1/PEL-TWA non-carcinogenic chemical unit exposure factor for acute exposure based on inhalation. Units are m3/mg.
RECEPTOR	Receptor	C(7)	URF	Transport Receptor Location: The constituent release is transported to a variety of receptor locations. The choices are On-site - At the location of the waste site, Restricted - At the boundary of the fence surrounding the area named in the

Field Name	Short Description	Field Type	Tables	Long Description
				environmental setting, Boundary - At the boundary of the Hanford reservation, Current - At a location used to represent the location of the current population in the Tri-Cities, and Future - At a location used to represent the location of the population of some future town within the current Hanford reservation boundaries.
REF	Reference Source	C(10)	INVEN INVEN3	Source of referenced inventory. For INVEN, choice is (empty) or BEMR. For INVEN3, choice is a number.
REF2	Reference Page Number	C(10)	INVEN	BEMR reference page number.
REF_NUM	Reference Number	C(10)	INVEN	BEMR document number for referenced inventory.
REL_FRAC	Release Fraction	C(10)	SITES2	Fraction of inventory specified for the accident to be released external to the facility.
REL_RATIO	Release Ratio	C(11)	WRKRSK	Release ratio for workers compared to accident release external to the facility.
RISK	Risk	C(10)	RISK	Risk calculated for the specified constituent and 70-year group.
RISKGRP	Risk Group	C(3)	RISK	70-Year group for which the risk was calculated.
R_UEFAIC	Risk UEFaic	C(12)	RAD_UEF	Radiation cancer risk unit exposure factor for acute exposure based on inhalation. Units are risk per Ci*s/m3.
SITE_NAME	Site name	C(60)	BOUNDARY INVEN3 SITES2	Common name for cluster of facilities at the location.
SOLID	UTF For Solid -Type Chemicals	C(14)	CHEM_UTF	Unit transport factors for solid - type chemicals. Units are mg/m3 per g released.
SOURCE	Inventory Source	C(7)	URF	Inventory source form. Choices are soil or bw (buried waste).
SPECIF_ACT	Specific Activity	N(20,17	MAT_PROP	Radioactive specific activity. Not currently used.
TYPE	Chemical Physical Form Type	C(8)	CHEM_TYP	Chemical physical form type. Choices are solid, liquid, and volatile.
UNIT	Unit	C(7)	RISK URF	Units for URF. Choice of risk/Ci or risk/g.
URF	URF	C(10)	RISK	Unit risk factor for the 70-year specified in units of risk/Ci or risk/g.
URF1	URF1	C(10)	URF	Unit risk factor for 70-year group 1 in units of risk/Ci or risk/g.
URF10	URF10	C(10)	URF	Unit risk factor for 70-year group 10 in units of risk/Ci or risk/g.
URF100	URF100	C(10)	URF	Unit risk factor for 70-year group 100 in units of risk/Ci or risk/g.
URF101	URF101	C(10)	URF	Unit risk factor for 70-year group 101 in units of risk/Ci or risk/g.
URF102	URF102	C(10)	URF	Unit risk factor for 70-year group 102 in units of risk/Ci or risk/g.
URF103	URF103	C(10)	URF	Unit risk factor for 70-year group 103 in units of risk/Ci or risk/g.

Field Name	Short Description	Field Type	Tables	Long Description
URF104	URF104	C(10)	URF	Unit risk factor for 70-year group 104 in units of risk/Ci or risk/g.
URF105	URF105	C(10)	URF	Unit risk factor for 70-year group 105 in units of risk/Ci or risk/g.
URF106	URF106	C(10)	URF	Unit risk factor for 70-year group 106 in units of risk/Ci or risk/g.
URF107	URF107	C(10)	URF	Unit risk factor for 70-year group 107 in units of risk/Ci or risk/g.
URF108	URF108	C(10)	URF	Unit risk factor for 70-year group 108 in units of risk/Ci or risk/g.
URF109	URF109	C(10)	URF	Unit risk factor for 70-year group 109 in units of risk/Ci or risk/g.
URF11	URF11	C(10)	URF	Unit risk factor for 70-year group 11 in units of risk/Ci or risk/g.
URF110	URF110	C(10)	URF	Unit risk factor for 70-year group 110 in units of risk/Ci or risk/g.
URF111	URF111	C(10)	URF	Unit risk factor for 70-year group 111 in units of risk/Ci or risk/g.
URF112	URF112	C(10)	URF	Unit risk factor for 70-year group 112 in units of risk/Ci or risk/g.
URF113	URF113	C(10)	URF	Unit risk factor for 70-year group 113 in units of risk/Ci or risk/g.
URF114	URF114	C(10)	URF	Unit risk factor for 70-year group 114 in units of risk/Ci or risk/g.
URF115	URF115	C(10)	URF	Unit risk factor for 70-year group 115 in units of risk/Ci or risk/g.
URF116	URF116	C(10)	URF	Unit risk factor for 70-year group 116 in units of risk/Ci or risk/g.
URF117	URF117	C(10)	URF	Unit risk factor for 70-year group 117 in units of risk/Ci or risk/g.
URF118	URF118	C(10)	URF	Unit risk factor for 70-year group 118 in units of risk/Ci or risk/g.
URF119	URF119	C(10)	URF	Unit risk factor for 70-year group 119 in units of risk/Ci or risk/g.
URF12	URF12	C(10)	URF	Unit risk factor for 70-year group 12 in units of risk/Ci or risk/g.
URF120	URF120	C(10)	URF	Unit risk factor for 70-year group 120 in units of risk/Ci or risk/g.
URF121	URF121	C(10)	URF	Unit risk factor for 70-year group 121 in units of risk/Ci or risk/g.
URF122	URF122	C(10)	URF	Unit risk factor for 70-year group 122 in units of risk/Ci or risk/g.
URF123	URF123	C(10)	URF	Unit risk factor for 70-year group 123 in units of risk/Ci or risk/g.
URF124	URF124	C(10)	URF	Unit risk factor for 70-year group 124 in units of risk/Ci or risk/g.
URF125	URF125	C(10)	URF	Unit risk factor for 70-year group 125 in units of risk/Ci or risk/g.
URF126	URF126	C(10)	URF	Unit risk factor for 70-year group 126 in units of risk/Ci or risk/g.
URF127	URF127	C(10)	URF	Unit risk factor for 70-year group 127 in units of risk/Ci or risk/g.
URF128	URF128	C(10)	URF	Unit risk factor for 70-year group 128 in units of risk/Ci or risk/g.
URF129	URF129	C(10)	URF	Unit risk factor for 70-year group 129 in units of risk/Ci or risk/g.
URF13	URF13	C(10)	URF	Unit risk factor for 70-year group 13 in units of risk/Ci or risk/g.
URF130	URF130	C(10)	URF	Unit risk factor for 70-year group 130 in units of risk/Ci or risk/g.
URF131	URF131	C(10)	URF	Unit risk factor for 70-year group 131 in units of risk/Ci or risk/g.
URF132	URF132	C(10)	URF	Unit risk factor for 70-year group 132 in units of risk/Ci or risk/g.

Field Name	Short Description	Field Type	Tables	Long Description
URF133	URF133	C(10)	URF	Unit risk factor for 70-year group 133 in units of risk/Ci or risk/g.
URF134	URF134	C(10)	URF	Unit risk factor for 70-year group 134 in units of risk/Ci or risk/g.
URF135	URF135	C(10)	URF	Unit risk factor for 70-year group 135 in units of risk/Ci or risk/g.
URF136	URF136	C(10)	URF	Unit risk factor for 70-year group 136 in units of risk/Ci or risk/g.
URF137	URF137	C(10)	URF	Unit risk factor for 70-year group 137 in units of risk/Ci or risk/g.
URF138	URF138	C(10)	URF	Unit risk factor for 70-year group 138 in units of risk/Ci or risk/g.
URF139	URF139	C(10)	URF	Unit risk factor for 70-year group 139 in units of risk/Ci or risk/g.
URF14	URF14	C(10)	URF	Unit risk factor for 70-year group 14 in units of risk/Ci or risk/g.
URF140	URF140	C(10)	URF	Unit risk factor for 70-year group 140 in units of risk/Ci or risk/g.
URF141	URF141	C(10)	URF	Unit risk factor for 70-year group 141 in units of risk/Ci or risk/g.
URF142	URF142	C(10)	URF	Unit risk factor for 70-year group 142 in units of risk/Ci or risk/g.
URF15	URF15	C(10)	URF	Unit risk factor for 70-year group 15 in units of risk/Ci or risk/g.
URF16	URF16	C(10)	URF	Unit risk factor for 70-year group 16 in units of risk/Ci or risk/g.
URF17	URF17	C(10)	URF	Unit risk factor for 70-year group 17 in units of risk/Ci or risk/g.
URF18	URF18	C(10)	URF	Unit risk factor for 70-year group 18 in units of risk/Ci or risk/g.
URF19	URF19	C(10)	URF	Unit risk factor for 70-year group 19 in units of risk/Ci or risk/g.
URF2	URF2	C(10)	URF	Unit risk factor for 70-year group 2 in units of risk/Ci or risk/g.
URF20	URF20	C(10)	URF	Unit risk factor for 70-year group 20 in units of risk/Ci or risk/g.
URF21	URF21	C(10)	URF	Unit risk factor for 70-year group 21 in units of risk/Ci or risk/g.
URF22	URF22	C(10)	URF	Unit risk factor for 70-year group 22 in units of risk/Ci or risk/g.
URF23	URF23	C(10)	URF	Unit risk factor for 70-year group 23 in units of risk/Ci or risk/g.
URF24	URF24	C(10)	URF	Unit risk factor for 70-year group 24 in units of risk/Ci or risk/g.
URF25	URF25	C(10)	URF	Unit risk factor for 70-year group 25 in units of risk/Ci or risk/g.
URF26	URF26	C(10)	URF	Unit risk factor for 70-year group 26 in units of risk/Ci or risk/g.
URF27	URF27	C(10)	URF	Unit risk factor for 70-year group 27 in units of risk/Ci or risk/g.
URF28	URF28	C(10)	URF	Unit risk factor for 70-year group 28 in units of risk/Ci or risk/g.
URF29	URF29	C(10)	URF	Unit risk factor for 70-year group 29 in units of risk/Ci or risk/g.
URF3	URF3	C(10)	URF	Unit risk factor for 70-year group 3 in units of risk/Ci or risk/g.
URF30	URF30	C(10)	URF	Unit risk factor for 70-year group 30 in units of risk/Ci or risk/g.
URF31	URF31	C(10)	URF	Unit risk factor for 70-year group 31 in units of risk/Ci or risk/g.
URF32	URF32	C(10)	URF	Unit risk factor for 70-year group 32 in units of risk/Ci or risk/g.
URF33	URF33	C(10)	URF	Unit risk factor for 70-year group 33 in units of risk/Ci or risk/g.

Field Name	Short Description	Field Type	Tables	Long Description
URF34	URF34	C(10)	URF	Unit risk factor for 70-year group 34 in units of risk/Ci or risk/g.
URF35	URF35	C(10)	URF	Unit risk factor for 70-year group 35 in units of risk/Ci or risk/g.
URF36	URF36	C(10)	URF	Unit risk factor for 70-year group 36 in units of risk/Ci or risk/g.
URF37	URF37	C(10)	URF	Unit risk factor for 70-year group 37 in units of risk/Ci or risk/g.
URF38	URF38	C(10)	URF	Unit risk factor for 70-year group 38 in units of risk/Ci or risk/g.
URF39	URF39	C(10)	URF	Unit risk factor for 70-year group 39 in units of risk/Ci or risk/g.
URF4	URF4	C(10)	URF	Unit risk factor for 70-year group 4 in units of risk/Ci or risk/g.
URF40	URF40	C(10)	URF	Unit risk factor for 70-year group 40 in units of risk/Ci or risk/g.
URF41	URF41	C(10)	URF	Unit risk factor for 70-year group 41 in units of risk/Ci or risk/g.
URF42	URF42	C(10)	URF	Unit risk factor for 70-year group 42 in units of risk/Ci or risk/g.
URF43	URF43	C(10)	URF	Unit risk factor for 70-year group 43 in units of risk/Ci or risk/g.
URF44	URF44	C(10)	URF	Unit risk factor for 70-year group 44 in units of risk/Ci or risk/g.
URF45	URF45	C(10)	URF	Unit risk factor for 70-year group 45 in units of risk/Ci or risk/g.
URF46	URF46	C(10)	URF	Unit risk factor for 70-year group 46 in units of risk/Ci or risk/g.
URF47	URF47	C(10)	URF	Unit risk factor for 70-year group 47 in units of risk/Ci or risk/g.
URF48	URF48	C(10)	URF	Unit risk factor for 70-year group 48 in units of risk/Ci or risk/g.
URF49	URF49	C(10)	URF	Unit risk factor for 70-year group 49 in units of risk/Ci or risk/g.
URF5	URF5	C(10)	URF	Unit risk factor for 70-year group 5 in units of risk/Ci or risk/g.
URF50	URF50	C(10)	URF	Unit risk factor for 70-year group 50 in units of risk/Ci or risk/g.
URF51	URF51	C(10)	URF	Unit risk factor for 70-year group 51 in units of risk/Ci or risk/g.
URF52	URF52	C(10)	URF	Unit risk factor for 70-year group 52 in units of risk/Ci or risk/g.
URF53	URF53	C(10)	URF	Unit risk factor for 70-year group 53 in units of risk/Ci or risk/g.
URF54	URF54	C(10)	URF	Unit risk factor for 70-year group 54 in units of risk/Ci or risk/g.
URF55	URF55	C(10)	URF	Unit risk factor for 70-year group 55 in units of risk/Ci or risk/g.
URF56	URF56	C(10)	URF	Unit risk factor for 70-year group 56 in units of risk/Ci or risk/g.
URF57	URF57	C(10)	URF	Unit risk factor for 70-year group 57 in units of risk/Ci or risk/g.
URF58	URF58	C(10)	URF	Unit risk factor for 70-year group 58 in units of risk/Ci or risk/g.
URF59	URF59	C(10)	URF	Unit risk factor for 70-year group 59 in units of risk/Ci or risk/g.
URF6	URF6	C(10)	URF	Unit risk factor for 70-year group 6 in units of risk/Ci or risk/g.
URF60	URF60	C(10)	URF	Unit risk factor for 70-year group 60 in units of risk/Ci or risk/g.
URF61	URF61	C(10)	URF	Unit risk factor for 70-year group 61 in units of risk/Ci or risk/g.
URF62	URF62	C(10)	URF	Unit risk factor for 70-year group 62 in units of risk/Ci or risk/g.

Field Name	Short Description	Field Type	Tables	Long Description
URF63	URF63	C(10)	URF	Unit risk factor for 70-year group 63 in units of risk/Ci or risk/g.
URF64	URF64	C(10)	URF	Unit risk factor for 70-year group 64 in units of risk/Ci or risk/g.
URF65	URF65	C(10)	URF	Unit risk factor for 70-year group 65 in units of risk/Ci or risk/g.
URF66	URF66	C(10)	URF	Unit risk factor for 70-year group 66 in units of risk/Ci or risk/g.
URF67	URF67	C(10)	URF	Unit risk factor for 70-year group 67 in units of risk/Ci or risk/g.
URF68	URF68	C(10)	URF	Unit risk factor for 70-year group 68 in units of risk/Ci or risk/g.
URF69	URF69	C(10)	URF	Unit risk factor for 70-year group 69 in units of risk/Ci or risk/g.
URF7	URF7	C(10)	URF	Unit risk factor for 70-year group 7 in units of risk/Ci or risk/g.
URF70	URF70	C(10)	URF	Unit risk factor for 70-year group 70 in units of risk/Ci or risk/g.
URF71	URF71	C(10)	URF	Unit risk factor for 70-year group 71 in units of risk/Ci or risk/g.
URF72	URF72	C(10)	URF	Unit risk factor for 70-year group 72 in units of risk/Ci or risk/g.
URF73	URF73	C(10)	URF	Unit risk factor for 70-year group 73 in units of risk/Ci or risk/g.
URF74	URF74	C(10)	URF	Unit risk factor for 70-year group 74 in units of risk/Ci or risk/g.
URF75	URF75	C(10)	URF	Unit risk factor for 70-year group 75 in units of risk/Ci or risk/g.
URF76	URF76	C(10)	URF	Unit risk factor for 70-year group 76 in units of risk/Ci or risk/g.
URF77	URF77	C(10)	URF	Unit risk factor for 70-year group 77 in units of risk/Ci or risk/g.
URF78	URF78	C(10)	URF	Unit risk factor for 70-year group 78 in units of risk/Ci or risk/g.
URF79	URF79	C(10)	URF	Unit risk factor for 70-year group 79 in units of risk/Ci or risk/g.
URF8	URF8	C(10)	URF	Unit risk factor for 70-year group 8 in units of risk/Ci or risk/g.
URF80	URF80	C(10)	URF	Unit risk factor for 70-year group 80 in units of risk/Ci or risk/g.
URF81	URF81	C(10)	URF	Unit risk factor for 70-year group 81 in units of risk/Ci or risk/g.
URF82	URF82	C(10)	URF	Unit risk factor for 70-year group 82 in units of risk/Ci or risk/g.
URF83	URF83	C(10)	URF	Unit risk factor for 70-year group 83 in units of risk/Ci or risk/g.
URF84	URF84	C(10)	URF	Unit risk factor for 70-year group 84 in units of risk/Ci or risk/g.
URF85	URF85	C(10)	URF	Unit risk factor for 70-year group 85 in units of risk/Ci or risk/g.
URF86	URF86	C(10)	URF	Unit risk factor for 70-year group 86 in units of risk/Ci or risk/g.
URF87	URF87	C(10)	URF	Unit risk factor for 70-year group 87 in units of risk/Ci or risk/g.
URF88	URF88	C(10)	URF	Unit risk factor for 70-year group 88 in units of risk/Ci or risk/g.
URF89	URF89	C(10)	URF	Unit risk factor for 70-year group 89 in units of risk/Ci or risk/g.
URF9	URF9	C(10)	URF	Unit risk factor for 70-year group 9 in units of risk/Ci or risk/g.
URF90	URF90	C(10)	URF	Unit risk factor for 70-year group 90 in units of risk/Ci or risk/g.
URF91	URF91	C(10)	URF	Unit risk factor for 70-year group 91 in units of risk/Ci or risk/g.

Field Name	Short Description	Field Type	Tables	Long Description
URF92	URF92	C(10)	URF	Unit risk factor for 70-year group 92 in units of risk/Ci or risk/g.
URF93	URF93	C(10)	URF	Unit risk factor for 70-year group 93 in units of risk/Ci or risk/g.
URF94	URF94	C(10)	URF	Unit risk factor for 70-year group 94 in units of risk/Ci or risk/g.
URF95	URF95	C(10)	URF	Unit risk factor for 70-year group 95 in units of risk/Ci or risk/g.
URF96	URF96	C(10)	URF	Unit risk factor for 70-year group 96 in units of risk/Ci or risk/g.
URF97	URF97	C(10)	URF	Unit risk factor for 70-year group 97 in units of risk/Ci or risk/g.
URF98	URF98	C(10)	URF	Unit risk factor for 70-year group 98 in units of risk/Ci or risk/g.
URF99	URF99	C(10)	URF	Unit risk factor for 70-year group 99 in units of risk/Ci or risk/g.
UTF	UTF	C(10)	DIST_UTF	Unit transport factor values for downwind distances. Units are sec/m3.
UTF_WCHEM	Worker Chemical UTF	C(11)	WRKRSK	Worker unit transport factor for chemical releases. Units are mg/m3 per g released.
UTF_WRAD	Worker Rad UTF	C(11)	WRKRSK	Worker unit transport factor for radionuclide releases. Units are sec/m3.
VOLATILE	UTF For Volatile-Type Chemical	C(14)	CHEM_UTF	Unit transport factors for liquid - type chemicals. Units are mg/m3 per g released.

Appendix D

RelScen Database Structure/Data Dictionary

Structure for database: REL_SCEN.DBF (Release Scenario database)
Number of data records: 189
Date of last update: 08/26/96

This database describes near-term risk release scenarios, the amount released during an unusual occurrence, and the probability of an accidental release occurring.				
FIELD	FIELD NAME		TYPE	WIDTH
1	BUILD_NAME	Building name	Character	55
2	STATUS	Status of facility/accident (e.g., current, past)	Character	8
3	OFCLNAME	Official name of facility	Character	60
4	SCEN_NAME	Scenario name	Character	100
5	SCENDESCPT	Scenario description	Memo	10
6	SCENFACDES	Scenario facility information	Memo	10
7	LIM_EXP_RT	Limiting exposure route [e.g., Air (acute and chronic), SW (chronic), GW (chronic), Direct Contact (acute)]	Character	45
8	RAD_CONTAM	Radionuclide inventory for the scenario/exposure route (i.e., released quantity of radionuclides - includes units)	Memo	10
9	CHM_CONTAM	Hazardous chemical inventory for the scenario/exposure route (i.e., released quantity of hazardous chemicals - includes units)	Memo	10
10	APP_REL_RT	Controlling release route for potential exposures	Character	100
11	REL_FRACT	Release fraction (i.e., fraction of inventory released during accident)	Memo	10
12	REL_PROB	Probability of accidental release occurring	Character	100
13	SCEN_REF	Reference for scenario	Memo	10

Appendix E
URF Database Structure and Field Terminology

Structure of Unit Risk Factors (URF) file

Column	Description		Units
1	Operable Unit		
2	Source	"Soil", "BW"	
3	Wasteform	"Soil", "Cement", or "Glass"	
4	Receptor		
5	Constituent Name of Parent		
6	Constituent Id of Parent		
7	Constituent Id		
8	Title	"Soil", "GWater", "VAir", "VSSoil", "SAir", "SSSoil", or "SWater"	
9	Constituent Type	"Rad", "Non", or "Carc"	
10	Exposure Route	"Ingestion", "Inhalation", or "External"	
11	Maximum Risk		risk/g or risk/Ci or HI/g
12	Maximum Risk Lifetime		lifetime
13	"Parent" or "Progeny"		
14+	Series of 142 (70-year lifetime) unit risk factors		risk/g or risk/Ci or HI/g

Structure of the Unit Flux Factor (UFF) file.

Column	Description	
1	Operable Unit	
2	Source	"BW" or "Soil"
3	Wasteform	"Soil", "Glass", or "Cement"
4	unused	
5	unused	

6	unused	
7	Constituent Name of Parent	
8	Constituent Id of Parent	
9	Constituent Id	
10	Datatype	"time", "suspend", "volatile", "overland", "leach", or "conc"
11+	Series of values for each datatype corresponding to time intervals described by the "time" values	"time" intervals are 1->9 by 1, 10->90 by 10, 100->900 by 100, 1,000->10,000 by 1000

Structure of the Unit Transport Factor (UTF) file.

Field	Description	Units
1	Operable Unit	
2	Media (unused)	
3	Depth (unused)	
4	Receptor	
5	Constituent Name of Parent	
6	Constituent Id of Parent	
7	Constituent Id	
8	Constituent Type	
9	Air	(mg/m^3)/g or (pCi/m^3)/Ci
10	Surface Soil	(mg/m^2)/g or (pCi/m^2)/Ci
11	Soil (Direct)	(g/g)/g or (pCi/g)/Ci
12	Groundwater start	years
13	Groundwater step	years

14-53	Groundwater series (40 values)	(g/ml)/g or (Ci/ml)/Ci
54	Surface water start	years
55	Surface water step	years
56-95	Surface water series (40 values)	(g/ml)/g or (Ci/ml)/Ci

Structure of Unit Dose Factor file (UDF)

Column	Description			Units
1	Constituent Id			
2	Radionuclide	Groundwater	Ingestion	rem/(Ci/ml)
3	Radionuclide	Groundwater	Inhalation	rem/(Ci/ml)
4	Radionuclide	Groundwater	External	rem/(Ci/ml)
5	Radionuclide	Surface Water	Ingestion	rem/(Ci/ml)
6	Radionuclide	Surface Water	Inhalation	rem/(Ci/ml)
7	Radionuclide	Surface Water	External	rem/(Ci/ml)
8	Radionuclide	Surface Soil	Ingestion	rem/(pCi/m^2)
9	Radionuclide	Surface Soil	Inhalation	rem/(pCi/m^2)
10	Radionuclide	Surface Soil	External	rem/(pCi/m^2)
11	Radionuclide	Soil	Ingestion	rem/(pCi/g)
12	Radionuclide	Soil	Inhalation	rem/(pCi/g)
13	Radionuclide	Soil	External	rem/(pCi/g)
14	Radionuclide	Air	Ingestion	rem(pCi/m^3)
15	Radionuclide	Air	Inhalation	rem(pCi/m^3)
16	Radionuclide	Air	External	rem(pCi/m^3)
17	Noncarcinogen	Groundwater	Ingestion	(mg/kg-d)/g/ml)
18	Noncarcinogen	Groundwater	Inhalation	(mg/kg-d)/g/ml)

19	Noncarcinogen	Surface Water	Ingestion	(mg/kg-d)/g/ml)
20	Noncarcinogen	Surface Water	Inhalation	(mg/kg-d)/g/ml)
21	Noncarcinogen	Surface Soil	Ingestion	(mg/kg-d)/(mg/m^2)
22	Noncarcinogen	Surface Soil	Inhalation	(mg/kg-d)/(mg/m^2)
23	Noncarcinogen	Soil	Ingestion	(mg/kg-d)/(g/g)
24	Noncarcinogen	Soil	Inhalation	(mg/kg-d)/(g/g)
25	Noncarcinogen	Air	Ingestion	(mg/kg-d)/(mg/m^3)
26	Noncarcinogen	Air	Inhalation	(mg/kg-d)/(mg/m^3)
27	Carcinogen	Groundwater	Ingestion	(mg/kg-d)/g/ml)
28	Carcinogen	Groundwater	Inhalation	(mg/kg-d)/g/ml)
29	Carcinogen	Surface Water	Ingestion	(mg/kg-d)/g/ml)
30	Carcinogen	Surface Water	Inhalation	(mg/kg-d)/g/ml)
31	Carcinogen	Surface Soil	Ingestion	(mg/kg-d)/(mg/m^2)
32	Carcinogen	Surface Soil	Inhalation	(mg/kg-d)/(mg/m^2)
33	Carcinogen	Soil	Ingestion	(mg/kg-d)/(g/g)
34	Carcinogen	Soil	Inhalation	(mg/kg-d)/(g/g)
35	Carcinogen	Air	Ingestion	(mg/kg-d)/(mg/m^3)
36	Carcinogen	Air	Inhalation	(mg/kg-d)/(mg/m^3)

Structure of Unit Impact Factors (UIF) file

Column	Description		Units
1	Constituent Id		
2	Carcinogen or Radionuclide	Ingestion	Risk/rem or Risk/(mg/kd-d)
3	Carcinogen or Radionuclide	Inhalation	Risk/rem or Risk/(mg/kg-d)
4	Carcinogen or Radionuclide	External	Risk/rem

5	Noncarcinogen	Ingestion	HI/(mg/kg-d)
6	Noncarcinogen	Inhalation	HI/(mg/kg-d)

Distribution

No. of Copies		
	ONSITE	
5	DOE Richland Operations Office	
	J.L. Daily (3)	A5-58
	S.T. Hwang (1)	A5-18
	J.D. Kautzsky (1)	A5-58
2	Lockhead Martin Hanford Company	
	J.E. Ferguson (2)	H5-24
2	Fluor Daniel Hanford Company, Inc.	
	P.R. Brobst (1)	H5-20
	J.L. Brennan (1)	H5-20
1	MACTEC	
	J.L. Madsen (1)	A4-35

No. of Copies		
50	Pacific Northwest National Laboratory	
	L.M. Bagaasen (1)	P7-43
	J.W. Buck (1)	K6-80
	W.T. Farris (5)	K3-54
	G.H. Gelston (1)	K6-80
	B.L. Harper (1)	K3-54
	B.L. Hoopes (1)	K6-80
	P.J. Mellinger (1)	K6-91
	K.R. Middleton (1)	K7-28
	M.J. Quadrel (3)	K9-70
	S.C. Slate (1)	K9-14
	D.E. Smith (1)	K7-22
	R.D. Stenner (25)	K3-54
	D.L. Strenge (1)	K3-54
	M.B. Triplett (1)	K9-09
	M.K. White (1)	K7-94
	Technical Report Files (5)	K1-06