LA-UR- 98-1885

95153

Approved for public release; distribution is unlimited.

Title: Thermodynamics and Electrodynamics of Unusual Narrow-gap Semiconductors

RECEIVED
OCT 08 1998
OSTI

Author(s): Albert Migliori, Timothy W. Darling, Franz Freibert, Evagelia Moshopoulou, John L. Sarrao, MST-10

Stuart A. Trugman, T-11

Submitted to: DOE OFFICE OF SCIENTIFIC AND TECHNICAL INFORMATION (OSTI)

MASTER

DISTRIBUTION OF THIS DOCUMENT IS UNLIMITED

Los Alamos
NATIONAL LABORATORY

Los Alamos National Laboratory, an affirmative action/equal opportunity employer, is operated by the University of California for the U.S. Department of Energy under contract W-7405-ENG-36. By acceptance of this article, the publisher recognizes that the U.S. Government retains a nonexclusive, royalty-free license to publish or reproduce the published form of this contribution, or to allow others to do so, for U.S. Government purposes. Los Alamos National Laboratory requests that the publisher identify this article as work performed under the auspices of the U.S. Department of Energy. The Los Alamos National Laboratory strongly supports academic freedom and a researcher's right to publish; as an institution, however, the Laboratory does not endorse the viewpoint of a publication or guarantee its technical correctness.

Form 836 (10/96)

DISCLAIMER

This report was prepared as an account of work sponsored by an agency of the United States Government. Neither the United States Government nor any agency thereof, nor any of their employees, makes any warranty, express or implied, or assumes any legal liability or responsibility for the accuracy, completeness, or usefulness of any information, apparatus, product, or process disclosed, or represents that its use would not infringe privately owned rights. Reference herein to any specific commercial product, process, or service by trade name, trademark, manufacturer, or otherwise does not necessarily constitute or imply its endorsement, recommendation, or favoring by the United States Government or any agency thereof. The views and opinions of authors expressed herein do not necessarily state or reflect those of the United States Government or any agency thereof.

DISCLAIMER

Portions of this document may be illegible in electronic image products. Images are produced from the best available original document.

Thermodynamics and Electrodynamics of Unusual Narrow-gap Semiconductors

Albert Migliori*, Timothy W. Darling, Stuart A. Trugman,
Franz Freibert, Evagelia Moshopoulou, and John L. Sarrao

Abstract

This is the final report of a three-year, Laboratory Directed Research and Development (LDRD) project at the Los Alamos National Laboratory (LANL) that has led to a fully funded DOE program to continue this work. The project was directed toward exploring the Ettingshausen effect, which is the direct extension of the familiar Peltier-effect refrigerator (the process used in popular coolers that run off automotive electrical power) in which a magnetic field is used to enhance refrigeration effects at temperatures well below room temperature. Such refrigeration processes are all-solid-state and are of potentially great commercial importance, but essentially no work has been done since the early 1970s. Using modern experimental and theoretical techniques, we have advanced the state-of-the-art significantly, laying the groundwork for commercial cryogenic solid-state refrigeration.

Background and Research Objectives

Our intent in this section is to provide a basic review of thermoelectric cooling in materials in which a strong magnetic field is present, and to indicate new directions in this old and extensively studied area of electronic transport in solids. The basic physical effects that describe heat transport by charge carriers in solids are the Peltier effect and the Ettingshausen effect. The Peltier effect, governing all modern thermoelectric coolers, is a thermal transport process requiring no magnetic field in which a thermal gradient is created parallel to an applied electric current. The Ettingshausen effect, a somewhat obscure but powerful refrigeration process, is a thermal transport process in which a thermal gradient is created perpendicular to an applied electric current and both these are perpendicular to an applied magnetic field. Because of the extensive literature on these processes and because of the detailed complexity of the new approaches developed at our Laboratory, we will attempt only to present an accurate but simple overview.

For some period of time, there has been an established interest in $Bi_{1-x}Sb_x$ alloys for use in electronic refrigerators. This appreciation was inspired by their large thermoelectric power (S) and low thermal conductivity. All present-day devices (Peltier coolers), however, use doped Bi_2Te_3 and operate near room temperature and without a magnetic field. The Sb alloys

* Principal Investigator, email: migliori@lanl.gov

of Bi showed promise only at lower temperatures and in magnetic fields (Ettingshausen coolers) of order 1T—too high for the inexpensive permanent magnets of the day—and so their development was stifled. With the advent of modern $Nd_2Fe_{14}B$ permanent magnets, 1T fields are routinely achieved in such mundane devices as automotive starter motors; however, the Ettingshausen effect has not been an active area of study by any group but our own. In addition, because orientation of the applied magnetic field with respect to the crystal axes plays an important role in optimizing Ettingshausen figures-of-merit values in $Bi_{1-x}Sb_x$, only one particular orientation has been used for essentially all previous work on this problem. However, little before our work has been published to rationalize physically this fact in terms of a microscopic picture, and it appears that the conventional wisdom is wrong. The apparent lack of understanding of the relationship between the band structure of Bi and its alloys with Sb, and the physics of thermoelectric and thermomagnetic effects leaves an interesting approach open, to be described below, that will provide substantially improved materials for Ettingshausen cooling.

Zero Magnetic Field

The root of all thermoelectric effects is the small variation of the energy and momentum distribution of charge carriers caused by temperature gradients. Such variations produce, among other things, a non-zero electric field inside electric conductors—the Seebeck effect—and it is the coupling between this electric field and electric current that provides thermoelectric power generation or refrigeration (the Peltier effect). The size of the effect is dependent on the energy scales and temperature of the solid. In a degenerate metal, where only a few charge carriers near the Fermi energy ε_f (ε_f/k_b is of order 30,000K, k_b is Boltzman's constant) are out of their ground state, the effects are small. In semiconductors and semimetals, where only a few charge carriers are present (Bi has 10^6 fewer charge carriers than Cu, and ε_f/k_b is ~1000K) and very few are in the ground state, the effects are large.

However all large thermoelectric effects, meaning those of sufficient strength to be of practical importance, arise only in solids that can be made to carry electric current via carriers (quasiparticles) of both negative (e or electron-like) and positive (h or hole-like) charge. Because of the "reverse" motion of holes, systems can be constructed where, although electric current circulates, "particle" current is unidirectional, and it is the particle current that carries heat.

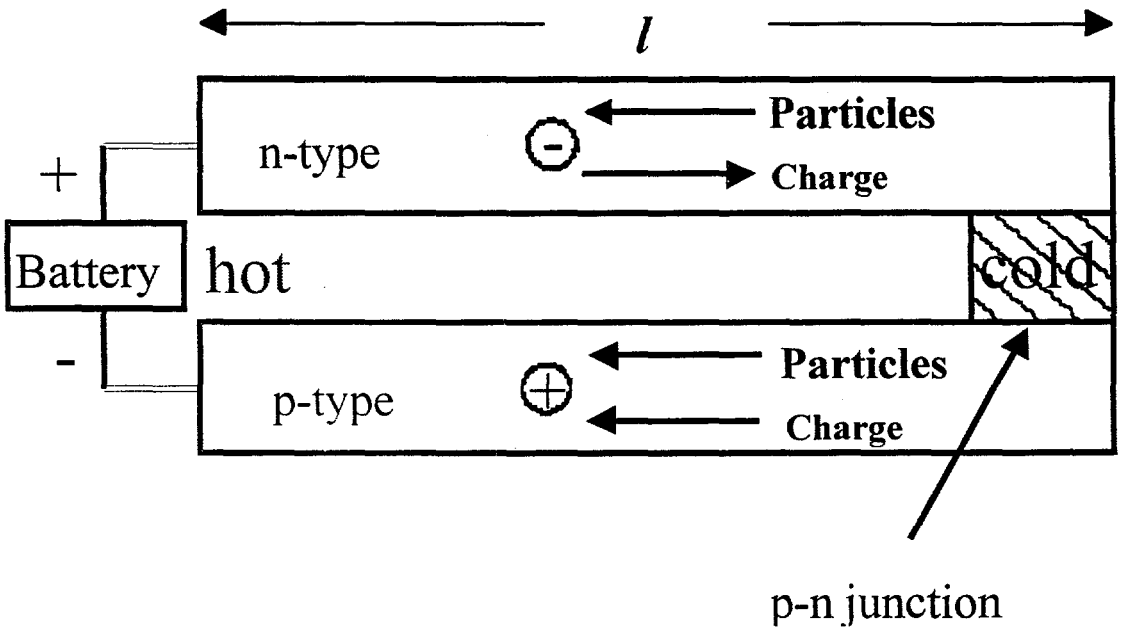

Figure 1. A simple schematic of a Peltier refrigerator consisting of a p-type and an n-type semiconductor bar joined at the cold end.

This is shown schematically in Figure 1 for a Peltier cooler that consists of two legs, one of a p-type semiconductor (holes are the majority carrier) and one of an n-type semiconductor (electrons are the majority carrier). Several key points, relevant to what follows, should be mentioned. One is that any holes in the n-type bar or electrons in the p-type bar will carry heat toward the cold end, degrading performance; the other is that thermal conduction (K) and the heat generated by the ordinary electrical conductivity of the material (σ) are fighting the cooling effects that the device is designed to achieve.

It can be shown that everything depends on the dimensionless and temperature-dependent quantity, $\sigma S^2 T/K$, historically called ZT, a particularly unhelpful appellation. Much more revealing is to note that $K/\sigma T$ has units of thermopower squared $(\mathrm{mV/K})^2$ so that a critical thermopower S_0 =155mV/K can be defined, which expresses a value for the thermopower that must be achieved for any reasonable thermoelectric material. If the material were such that the phonon thermal conductivity could be neglected, the quantity inside the square root is the Lorenz number $L=(155\mathrm{mV/K})^2$, a constant that comes from the Wiedemann-Franz law, a very general relationship between the electronic thermal conductivity and the electrical conductivity that constrains the ratio K/σ to be constant. Thus any material with a thermopower less than about 155mV/K is not going to be a good candidate for a Peltier refrigerator.

The search for good thermoelectric cooling materials is a battle to make S greater than S_0 (S/S_0=1 for very good materials) and minimize the phonon contribution to K (not much can be done about the electronic contribution to K because one is not going to beat the Wiedemann-Franz law substantially in a system with enough carriers to pump heat).

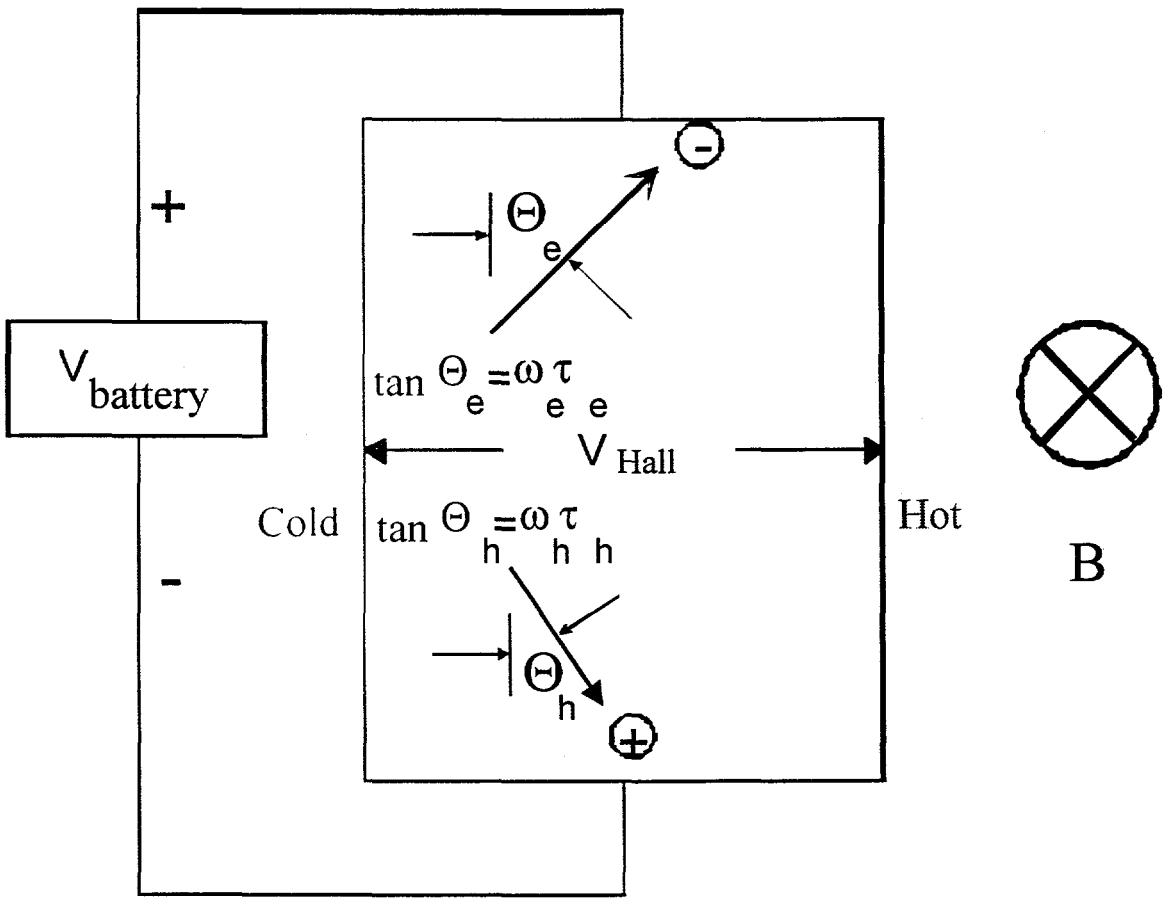

Figure 2. This schematic shows a bar of material in a magnetic field and the various transport quantities that contribute to Ettingshausen thermoelectric cooling.

Effects In A Magnetic Field

We are, however, not working on Peltier coolers, but on the more complex Ettingshausen cooler. The complexities come in because the material properties must be treated as tensors and the analysis is more difficult. In Figure 2 we show a schematic of what the charge carriers must do: the idea is to use a single material in which both electrons and holes are present. An electric field makes the holes travel roughly upward and the electrons roughly downward. The magnetic field B, however, deflects both carriers to the positive x-direction, and it is this effect that, exactly analogous to Peltier cooler, pumps heat. Notice that just as in a

Peltier cooler, the electric current carried by holes is opposite in direction to the current carried by electrons but there is a net flow of particles toward the hot end.

It is clear that one quality of importance is to maximize the total number of particles moving toward the hot end. If the number and velocity of electrons did not equal the same quantities for holes, then very quickly, charge would pile up at the hot side, creating a voltage (the Hall voltage) that would reduce (or stop if only one carrier were present) the flow of the majority carriers, degrading refrigeration. Therefore, the ideal Ettingshausen material must have equal numbers of electrons and holes with equal mobility. This is called 'e-h symmetry'. Such a system has ZERO thermopower and would produce no temperature drop if used in a Peltier cooler.

Under the assumption that we have two bands, e and h, with the same masses and with the same mean free path, that is, perfect e-h symmetry, all the transport quantities are now tensors. In analogy with the Peltier cooler, $\sigma_{11}S_{12}^2T/K$ controls things, but now S_{12} is the transverse thermopower, while σ_{11} remains the ordinary electrical conductivity. Because E and j are perpendicular to the heat flows, two or more Ettingshausen coolers (EC) in series can make electrical contact between the hot end of the smaller stage and the cold end of the larger stage, making it possible to produce a sequence of staged coolers simply by machining the correct shape from the bar of single material. Therefore, in a properly engineered EC, there is no obvious minimum temperature, T varies strongly with length, and assumptions used to analyze Peltier coolers with small temperature drops are not valid.

Furthermore, the equations describing the two processes are fundamentally different, even though some authors attempt to map the Ettingshausen problem onto the Peltier problem by using different definitions for K and σ. Such attempts are no help to the materials scientist who is interested only in how well the refrigerator can be made to work. The best approach to developing an EC material is to use the best of modern solid-state theory to predict candidate alloys and use measured values of the conductivity tensor, the thermopower tensor, and the thermal conductivity to optimize the shape and driving electric and magnetic fields. We believe that this has never been done as well as it is possible to do and that the real potential of ECs has not yet been realized.

Our goals are to grow good crystals of a range of Sn-doped Bi-Sb alloys and measure their thermal conductivity, thermopower, Nernst coefficient (the transverse thermopower in a magnetic field), resistivity and Hall resistivity as a function of Sb concentration, Sn concentration, magnetic field, and temperature and then use the results to produce an optimum Ettingshausen material for cooling to below 80K. To do this we must also develop theoretical tools that describe the details of combined charge and heat transport in semimetals in a magnetic field.

Importance to LANL's Science and Technology Base and National R&D Needs

It appears possible, using the approach described here, to produce the materials required for a compact Ettingshausen cryogenic cooler that can reach liquid nitrogen temperatures. The device would produce stray magnetic fields comparable to the earth's field, and operate with the hot heat exchanger air cooled to ambient temperature. The payoff if such a device were developed is substantial, essentially enabling the high T_c superconductor industry to invade non-laboratory applications including consumer electronics. Spin-offs in both science and technology would be significant as well, including medical (office visit skin cancer treatment with no liquid nitrogen container to be maintained), laboratory (low-temperature cryogenics measurement systems an order of magnitude reduced in cost), and vacuum applications (a sorption pump needing no cryogen!). Military applications are also obvious, including coolers for focal plane arrays and the cooling of ultra-fast, low-voltage conventional semiconducting devices (especially CPUs), a newly emerging area of importance where anticipated speed and performance exceed superconducting devices.

Scientific Approach and Accomplishments

There are very good ways to attack the material development problem if one bases the approach on the search for e-h symmetry and an understanding of the directional properties of transport in single crystals of the Bi-Sb system. We have quantified this second point, and at the same time provided a new and fundamental basis for the historical choices of magnetic field B, electric field E, and electric current j in a Bi-based EC cooler. This, and the band structure of Bi-Sb, suggest new directions for materials development.

In Figure 3 we show the Fermi surfaces of Bi. This set of surfaces is the intersection of ε_f with the dispersion curves of the electrons and holes. Even though there are several electron surfaces, the total number of electrons equals the number of holes. Where the surfaces are narrow, the dispersion curves have a lot of curvature, yielding low effective masses. Remembering that one goal is to maximize the total flux of heat-carrying particles, can we find a rule that will tell us what directions B, E, and j must be in? What we are after is the maximum possible component of current for each carrier separately for a given current drawn from the battery. We have recently shown that this occurs when effective mass in the heat-carrying direction is a minimum. This remarkable result is one of the few instances where only one

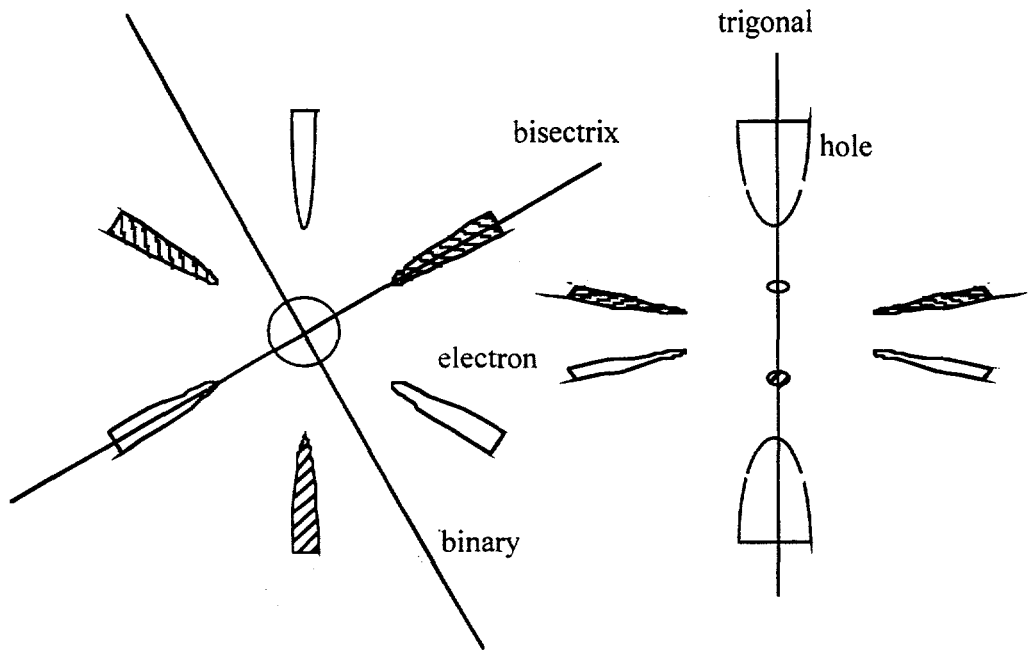

Figure 3. Fermi surface of Bi.

component of the effective mass tensor is involved in transport in a magnetic field.

Maximizing these effects is very important, but one cannot simply increase the magnetic field because if B exceeds 1T or so, permanent magnets cannot be used and the system becomes a laboratory curiosity. Thus it is important for the effective mass and the scattering of electrons to be low. We can keep electronic scattering down by minimizing alloy elements that change the electron count, and we can make sure that the temperature gradient points in the direction of lowest mass.

Finally, we point out that the conventional approach to predictions of performance, as found in textbooks on solid-state refrigeration, has been shown to be nearly unusable. The difficulty lies in the fact that the *form* of the differential equations is affected by simplifying assumptions (usually that all transport coefficients are temperature-independent). We have developed a much more accurate approach to this problem, using the full, measured temperature dependence, and have developed better and more accurate simplifications for more approximate theoretical studies. The above new approaches and guidance are the result of the theoretical studies we made.

All of these, and more detailed considerations, lead us to produce and measure Bi with about 3% Sb and with parts-per-million of Sn as the key alloys. Such systems have been well

studied without Sn, with large amounts of Sn, and with *E*, *B* and *j* in the conventional orientation. However there are no studies where we believe the maximum effects occur.

In order to explore carefully new alloys of doped Bi-Sb, a very tedious collection of somewhat difficult measurements must be made. These must include the resistivity tensor, the thermopower tensor, and the thermal conductivity for many alloys over a broad temperature range in a varying magnetic field. In addition, the measurement techniques are non-trivial. The difficulty arises because a good thermoelectric material (Peltier or Ettingshausen) generates huge thermoelectric voltages and substantial temperature gradients when current is passed through it, mixing up thermopower and resistivity signals in a nearly impossible-to-unscramble way. Nevertheless, these studies are well underway, with promising results.

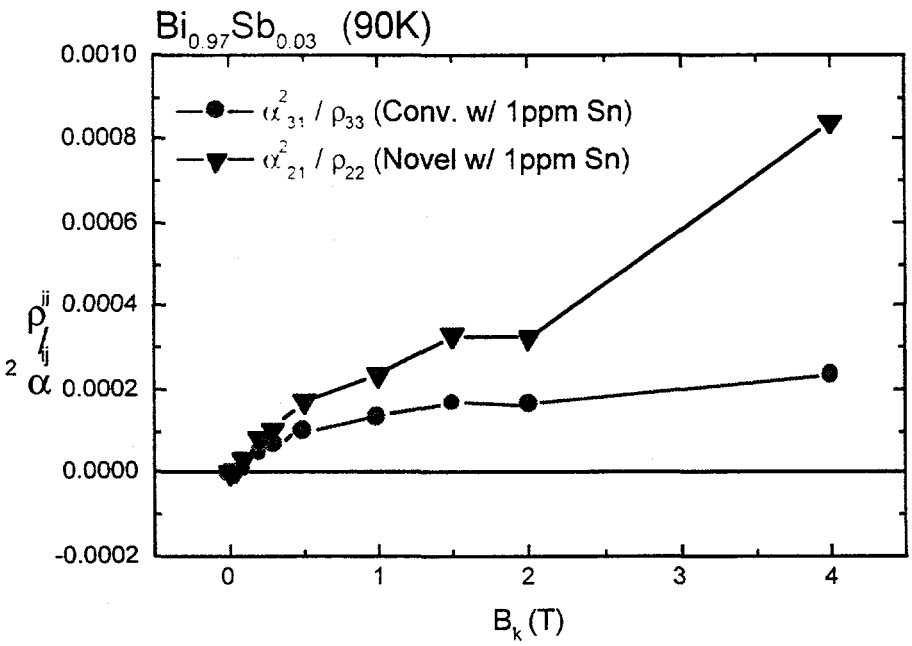

Figure 4. The partial figure of merit (because thermal conductivity is the same for both samples, it is left out) for the conventional and LANL orientations of a sub-optimally-doped sample.

In Figure 4, we show a partial performance coefficient as a function of temperature for the conventional and LANL orientations of magnetic fields. As we expect, the LANL orientation is superior. This successful LDRD project has resulted in a new DOE/AEP-funded project titled "Magnetically Enhanced Thermoelectric Cooling."

Publications

1. Freibert, F., Migliori, A., Darling, T. W., Movshovich, R., "New Results for the Adiabatic Thermoelectric and Conductivity Tensors in Bi-Sb Alloy Single Crystals," presented at the 1997 APS Spring Meeting.

2. Migliori, A., Darling, T., Freibert, F., Trugman, S., Moshopoulou, E., Sarrao, J., "Optimization of Materials for Thermomagnetic Cooling," accepted for publication in Journal of Materials Research (1997).

3. Migliori, A., Freibert, F., Darling, T. W., Trugman, S. A., Moshopoulou, E., Sarrao, J. L., "New Approaches to Thermoelectric Cooling Effects in Magnetic Fields," accepted for publication in Journal of Heat Transfer (1997).

4. Migliori, A., Freibert, F., Darling, T. W., Sarrao, J. L., Trugman, S. A., Moshopoulou, E., "New Directions in Materials for Thermomagnetic Cooling," submitted for publication in the "Proceedings of the 1998 Space Technology and Applications International Forum" (1997).