ANL/XFD/CP--87552 CONF-9510119--30

Alignment and commissioning of the APS beamline front ends

D. Shu, J. Barraza, M. Ramanathan, J. Chang, and T.M. Kuzay
Experimental Facilities Division, Advanced Photon Source, Argonne National Laboratory, Argonne, Illinois 60439

RECEIVED
MAR 27 1996
OSTI

(Presented on 20 October 1995)

Fifteen out of forty phase-one beamline front ends have been installed in the storage-ring tunnel at the 7-GeV Advanced Photon Source (APS). For the front-end installation, a four-step alignment process was designed and consists of (1) prealigning the front-end components with support tables in the preassembly area, (2) installing the components with tables in the storage-ring tunnel and aligning relative to the APS global telescope survey network, (3) confirming the alignment using a tooling laser alignment system, and (4) performing adjustments with the synchrotron-radiation beam during commissioning.

The laser alignment system and the prealignment data-base have been of great importance for the expeditient maintenance of front-end components. These tools are very important to a large synchrotron radiation facility such as the APS, since they make a quick alignment setup possible and minimize alignment time inside the tunnel.

This paper will present the four-step alignment process, the laser alignment system, and discuss the alignment confirmation results. © *1995 American Institute of Physics*

I. INTRODUCTION

The 7-GeV Advanced Photon Source (APS), now under commissioning at Argonne National Laboratory, is one of a new third-generation of synchrotron-radiation sources [1] that have presented a multitude of challenges in the design and manufacturing of the beamline front end components [2]. In the planned phase-one construction, twenty sectors are available for user beamlines and experimental stations. Each sector contains two beamline front ends, one from an insertion device (ID) source, such as an undulator or wiggler, and the other from a bending magnet (BM) source. Fig. 1 shows a typical front end for an APS undulator source. Two fixed masks confine the photon beam and protect the downstream components from missteering. Two "hockey-stick" style, high-heat-flux photon shutters intercept the photon beam and protect the safety shutters and vacuum valves from any thermal load. Radiation protection in the downstream experimental area is provide by two lead collimators and two tungsten safety shutters. The photoelectron emission signals from two photon beam position monitors (PBPM) are fed back into the storage-ring orbit-control system for photon-beam stabilization. Outside the tunnel, a set of commissioning filter/windows or a differential pumping system isolates the beamline vacuum from the front-end vacuum. The total length of the ID front end is about 7.5 meters in the storage-ring tunnel and is about 14.2 meters for a BM front end.

To achieve the design goals of the front end, it is important to correctly place each component about the theoretical beam line within the tolerances specified by its function and aperture size. A four-step alignment procedure satisfies this requirement and, with the aid of the tooling laser system, lends itself to an expeditious replacement of component assemblies needing maintainance.

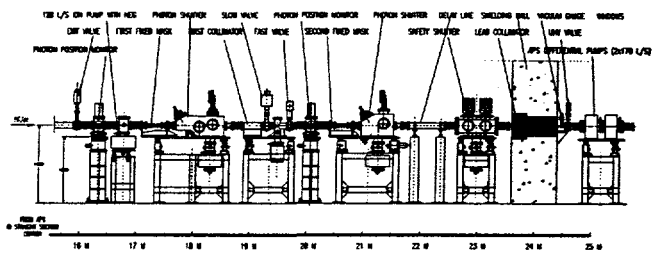

FIG. 1 Typical Front End for the APS Undulator Source

II. PREALIGNMENT IN ASSEMBLY AREA

The first step in aligning a front-end component is performed in a clean room environment. After passing quality control, a front-end is mounted to its support table as illustrated in Fig. 2. The table top (1) of the support table contains two sets of survey references. The primary set consists of three tooling ball fiducials, each 0.50 inch in diameter, inserted in the table top as shown. The secondary set consists of the table top surface and the outboard table edge. Using the alignment system described below, the table top is leveled and squared with respect to the alignment system using the three tooling ball fiducials to define a reference plane. Next, the component aperture centerline, found optically by measuring the geometric center of the entrance and exit apertures, is adjusted on the table so that it is parallel to both surfaces on the secondary survey reference. Now, both the component centerline and the tooling ball fiducials are aligned square and parallel to alignment system. The prealignment is completed by optically transferring the vertical and horizontal coordinates of the aperture centerline to the tooling ball fiducials and recorded in a data base.

DISTRIBUTION OF THIS DOCUMENT IS UNLIMITED

MASTER

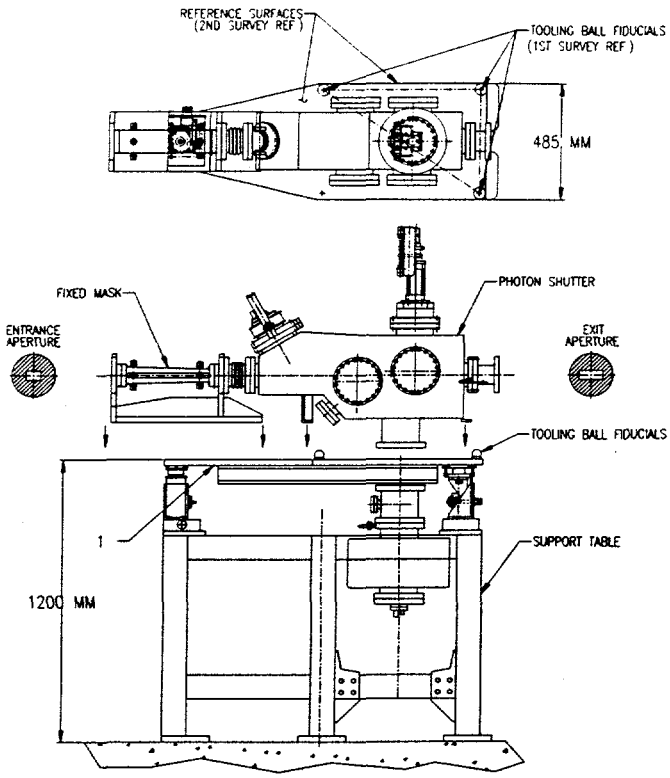

FIG. 2. Installation to Support Table in Pre-assembly Area.

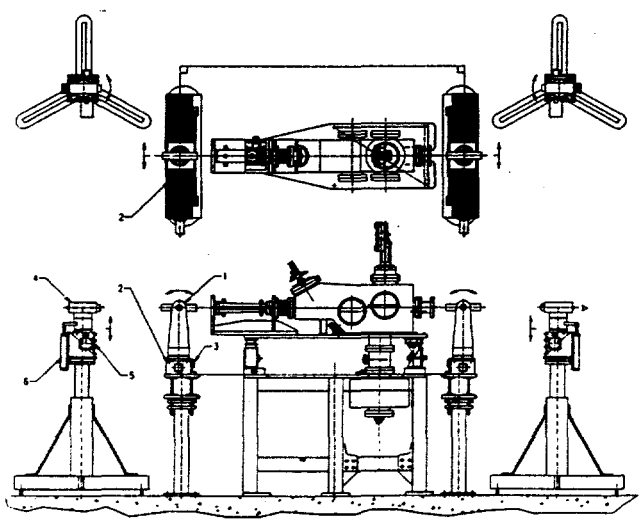

FIG. 3. Alignment in Pre-alignment Area, (1) transit telescope, (2) horizontal stage, (3) linear optical encoder, (4) precision optical level, (5) vertical translation stage, (6) linear optical encoder

Fig. 3 illustrates the telescope-base prealignment system. The measurement accuracy in this setup is limited by the optical characteristics of the measurement telescopes. With careful measurement, an accuracy of 50 micrometers or better can be achieved. As shown, a Brunson Instruments transit telescope (1) [3] is mounted on a precision, stepper-motor-driven, horizontal stage (2) with 600-mm of travel and 12.5-micrometer position resolution. A 1-micrometer-resolution linear optical encoder (3) is used for position indication when obtaining horizontal coordinates to the tooling ball fiducials. The vertical position information is obtained separately using a Leica WILD N3 [4] precision optical level (4) mounted on a precision vertical translation stage (5) with 50-mm of travel and 0.635-micrometer resolution. Similarly, the 1-micrometer linear optical encoder (6) provides vertical-position indication to the tooling ball fiducials.

III. ALIGNMENT TO APS GLOBAL TELESCOPE SURVEY NET

The second alignment step is performed after the components are installed inside the storage-ring tunnel. Initially, the components are "rough" positioned about the blue-line survey mark with a 2-3 mm accuracy. With the support frame leveled and bolted to the floor, a fine alignment to the APS global survey network is performed by the APS survey group. The survey group utilizes the coordinate information from the prealignment step to transfer the component centerline to the theoretical beam line established by the APS survey network. Fine adjustments of the components are accomplished with the 3-point kinematic-mount support table [5]. This alignment process yields a 250-micrometer accuracy relative to the local sector area.

IV. ALIGNMENT CONFIRMATION WITH LASER SYSTEM

To independently confirm the alignment from the first and second steps, a tooling laser system is used to check the straightness of the optical aperture center line on a completed front end. As shown in Fig. 4, the frequency- and mode-stabilized He-Ne laser head [6] is mounted to the safety shutter table. With a special fixture, the laser head is aligned offset to the secondary reference surfaces, that is, to the table's top and edge surfaces. An end position detector, mounted to the first BPM, defines the laser beam and monitors the beam stability. Next, each component's relative position to the laser beam is measured by moving a "see-through" detector to each component and recording the X-Y coordinates from the secondary reference surfaces on each table top. With these values, the optical center line of the front-end can be determined by calculation and from the data-base obtained from the prealignment step. Fig. 5 plots the typical alignment data from the 1-ID front end laser measurement.

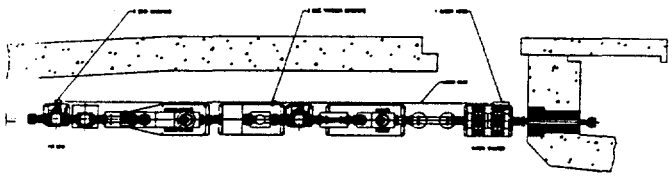

FIG 4. Alignment Verification of Completed Front End Assembly

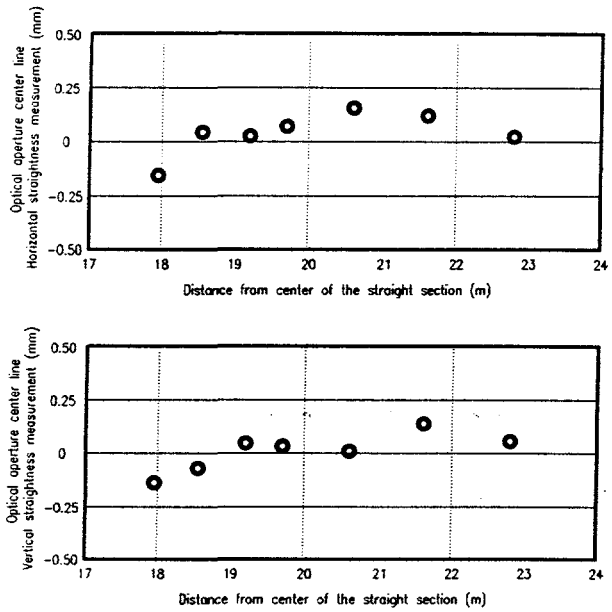

FIG 5. A typical alignment data from the ID front end laser measurement

Although this technique does not confirm the absolute aperture centerline position, it does provide linear deviation measurement to a 25-micrometer sensitivity. Further, the measurement process takes less than 30 minutes and provides a check for occasional telescopic measurement errors. Even more valuable, should a complete component need to be removed and/or replaced for maintenance, the tooling laser system will reduce the alignment time significantly by taking advantage of the secondary reference plane. For a large synchrotron radiation facility such as the APS, the result is improved beam availability through the reduction of alignment time in the maintenance process.

V. FINAL ADJUSTMENT WITH SYNCHROTRON RADIATION BEAM COMMISSIONING

After the alignment confirmation, the front end is now ready to commission with limited beam current. A thermal sensitive paper was used to quickly check the beam position in the experimental station. A more accurate beam position measurement was done by a scanning photoemmission beam profiler or a set of precision slits with a photon flux detector. Initial alignment is also necesary for these devices using a measuring telescope with APS survey targets.

Based on the measurement data for the beam position in two locations in the experimental station and compared with the calibration scan data from the front end X-ray BPMs, final fine tuning of the storage ring and/or final adjustment of the front-end components will be needed. A new zero position will be set after the synchrotron radiation beam commissioning.

VI. DISCUSSION

The commissioning of the first two beamline front ends (1-BM and 1-ID) yielded successful results of the four-step alignment process described. In each case, the full beam passed through into the first optics stations when the front end shutters were opened. Details of the XBPM measurements and beam profiler are discussed in an accompanying paper.

[1]G.K. Shenoy et al., Status of the Advanced Photon Source Project, Int. Symp. on X-Ray Synchrotron Radiation and Advanced Science and Technology, RIKEN, JAERI, Japan (1990)
[2]D. Shu, T.M. Kuzay, Nuclear Instruments and Methods, A 347 (1994) 584-590
[3]Brunson Instruments, Kansas City, MO
[4]WILD N3 User Manual, Leica Heerbrugg AG, Heerburg, Switzerland
[5]J. Barraza, D. Shu, T.M. Kuzay, Nuclear Instruments and Methods, A 347 (1994) 591-597
[6]Mark-Tech Laser Inc., San Jose, CA

The submitted manuscript has been authored by a contractor of the U. S. Government under contract No. W-31-109-ENG-38. Accordingly, the U. S. Government retains a nonexclusive, royalty-free license to publish or reproduce the published form of this contribution, or allow others to do so, for U. S. Government purposes.

DISCLAIMER

This report was prepared as an account of work sponsored by an agency of the United States Government. Neither the United States Government nor any agency thereof, nor any of their employees, makes any warranty, express or implied, or assumes any legal liability or responsibility for the accuracy, completeness, or usefulness of any information, apparatus, product, or process disclosed, or represents that its use would not infringe privately owned rights. Reference herein to any specific commercial product, process, or service by trade name, trademark, manufacturer, or otherwise does not necessarily constitute or imply its endorsement, recommendation, or favoring by the United States Government or any agency thereof. The views and opinions of authors expressed herein do not necessarily state or reflect those of the United States Government or any agency thereof.

DISCLAIMER

Portions of this document may be illegible in electronic image products. Images are produced from the best available original document.