"The submitted manuscript has been authored by a contractor of the U.S. Government under contract No. DE-AC05-84OR21400. Accordingly, the U.S. Government retains a nonexclusive, royalty-free license to publish or reproduce the published form of this contribution, or allow others to do so, for U.S. Government purposes."

CONF-950905--21

RECEIVED
JAN 17 1995
OSTI

The Technology of ICRF Systems*

F. W. Baity, G. C. Barber, T. S. Bigelow, R. H. Goulding, D. J. Hoffman, P. M. Ryan, H.-M. Zhang
Oak Ridge National Laboratory
P. O. Box 2009, Oak Ridge, TN 37831-8071

ABSTRACT

The technology of ICRF systems has made substantial gains in the past few years. The total power levels have increased from the 5-MW level to greater than 20 MW; the pulse lengths have increased from the 100-msec level to 30 seconds. Recently, fast wave current drive (FWCD) has been demonstrated using phased arrays of ICRF antennas. In order to achieve such large gains, substantial changes and improvements were needed in the level of design analysis, fabrication techniques, and system controls.

INTRODUCTION

Improvements in antenna designs [1-17] that facilitated multimegajoule operation began with the increase in RF vacuum feedthrough voltage limits from 20 kV to 50 kV. At the same time, antenna designs have been improved by incorporating more efficient Faraday shields with low-Z coatings to reduce impurity generation. The next level of improvement was better analysis of the current distributions in radiating structures. The knowledge of these currents was initially needed to evaluate where to put cooling for long pulse operation, but is also required for loading calculations and spectral coupling calculations. The long pulse impact on the design is embodied in Tore Supra, where the antennas are designed to handle pulse lengths up to 210 sec. Knowledge of the current distributions in evaluating power was recently demonstrated to yield engineering-level confidence in coupling analysis on TFTR [18]. Finally, with the additional function of generating a directional array for the purpose of current drive, such codes and measurements were used to optimize the spectrum for fast wave current drive (FWCD) on DIII-D [4].

Current drive imposes the additional demand for phase control. In particular, the mutual flux linkage at the strap had to be compensated for in a matching/control circuit. First, second, and third generation level phase control circuits have been demonstrated to be successful on DIII-D [19-22] and JET [23-24]. Codes such as FDAC [25] were used to evaluate the stability of such circuits. Beyond the need for phase control is the need to cope with various plasma load variations.

Real time matching programs, again using extensive circuit codes, have been employed on JET to achieve matching on the 200-msec time scale. For faster transients, such as arcs and ELMs, passive and active feedback designs are either in place or are in development now [23-24,26-28].

The transmitters, although generally operating in the 1-MW level initially, have been developed to the 2-MW level. This involved tube development, such as that carried out on the X2274 by General Atomics and EIMAC [29]. These transmitters are now being developed to cope with the complex ICRF arrays discussed above.

To get to ITER and beyond, additional development is needed in first wall materials, transmission line supports, and control systems. Improvements in the power density at the launcher are desirable. New launcher concepts, such as the folded waveguide [30-32], while marginally practical in today's fusion machines, offer potential advantages over conventional loop antennas for larger machines at higher magnetic field.

MODELING

Much of our recent progress has been in the modeling of antenna structures [18,33] and plasma interactions, particularly for coupled antenna arrays. Most of the ICRF antennas in use today were built before the latest 3-dimensional models were developed. Consequently, the effects of feedline coupling and other internal (and external, for that matter) structures on current balance and loading were not fully anticipated. Using these models to improve the antenna configuration and testing the improvements on full-scale bench mockups has proven quite successful in the case of the JET A2 [3] and ASDEX-U [7] antennas. Fig. 1 shows a set of codes used by ORNL and collaborators for antenna analysis and design, with the applicability of each.

The ANTMOD [23] code has been developed to allow quick modeling of complex antenna geometries from the standpoint of calculating current and voltage profiles and calculating input impedances. The code uses cascaded, coupled, lossy transmission lines to model these parameters. Fig. 2 shows measured and calculated values of R_c vs. frequency for the two types of straps (outer and crossover) on the JET A2 antennas. The quantity R_c is the value of the resistive load which would

*Research managed by the Office of Fusion Energy, U.S. Department of Energy, under contract DE-AC05-84OR21400 with Lockheed Martin Energy Systems, Inc.

DISTRIBUTION OF THIS DOCUMENT IS UNLIMITED

MASTER

DISCLAIMER

Portions of this document may be illegible in electronic image products. Images are produced from the best available original document.

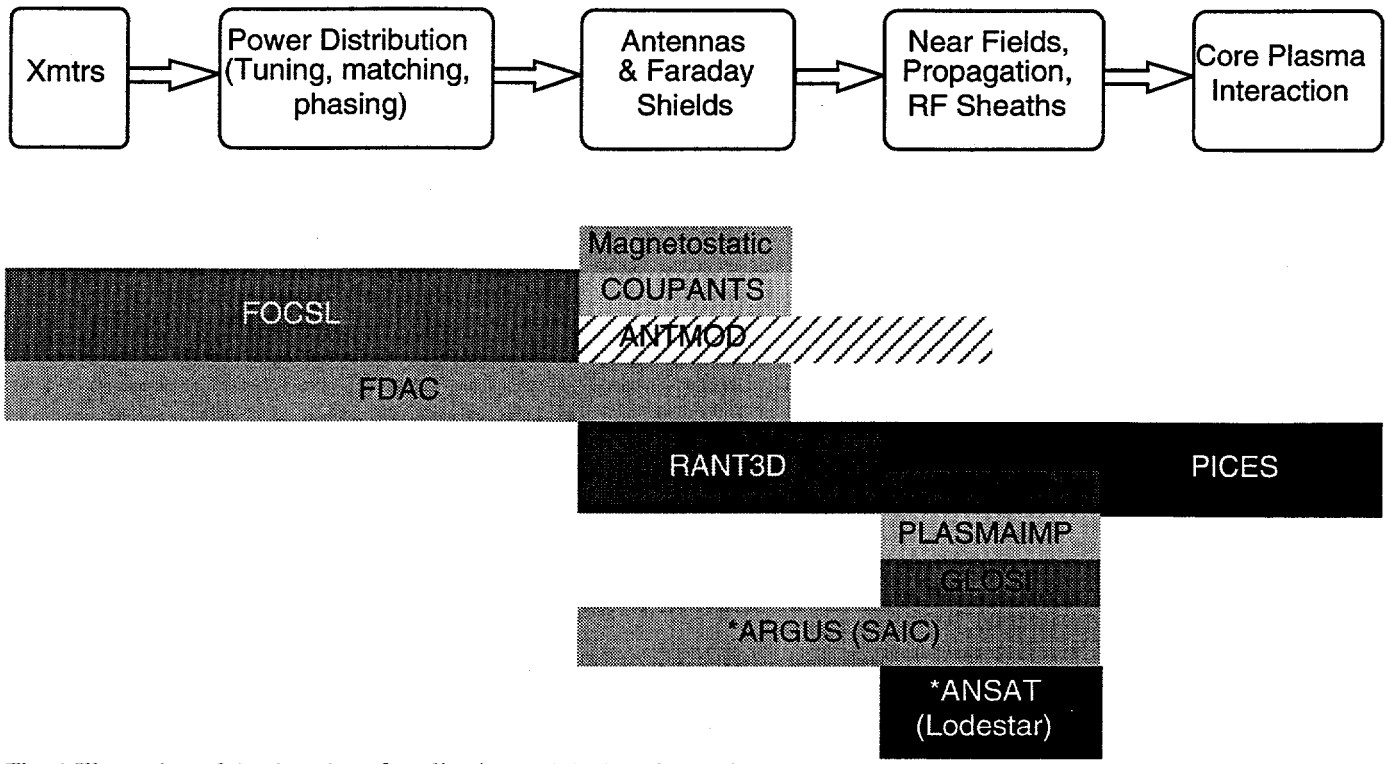

Fig. 1 Illustration of the domains of application and the interfaces of a representative set of codes used to design and analyze RF systems.

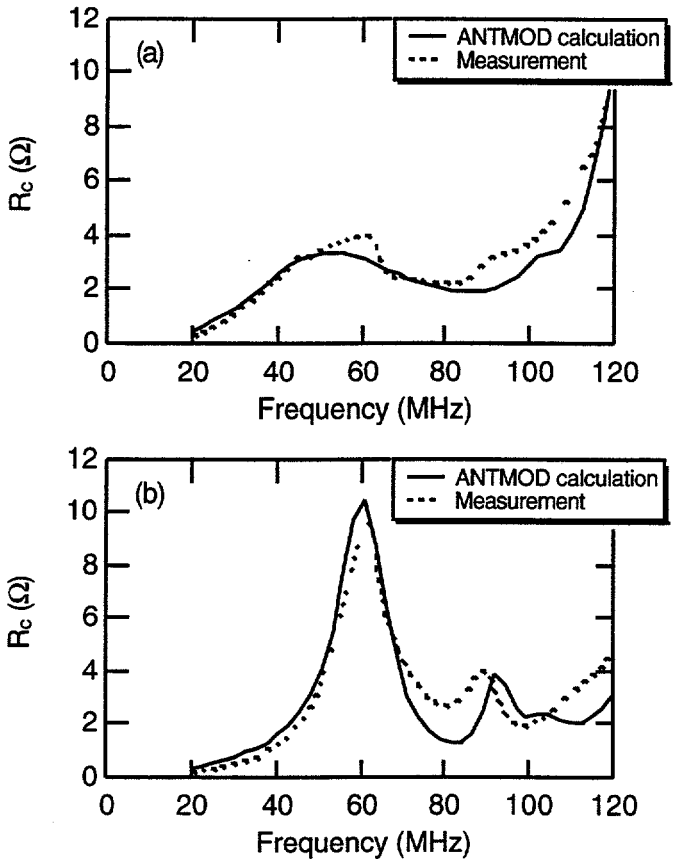

Fig. 2 Comparison of calculated and measured coupling resistance as a function of frequency for the JET A2 antennas for (a) the current strap without a crossover (VTL strap), and (b) the strap with a crossover.

give the same value of the VSWR in the feedline as the calculated value, and is equal to Z_0/VSWR, where Z_0 is the characteristic impedance (30 Ω for JET) and VSWR is the voltage standing wave ratio in the feedline. Thus it is inversely proportional to the square of the maximum voltage appearing in the feedline for a given value of the net power. The code is very useful in predicting how changes in the antenna geometry will influence the effective loading seen by the transmission line, as well as voltages in various sections of the antenna current straps.

Fig. 3 illustrates how changes in the antenna geometry can change the effective loading seen by the transmission line. The ASDEX-Upgrade antenna has two straps, with one strap having a horizontal crossover in the feedline. As originally configured, the loading seen by the crossover strap was much lower than the strap without a crossover, particularly in the upper frequency range. Based on measurements of antenna scattering parameters and predictions using transmission line models, it was decided to increase the characteristic impedance of the crossover lead from ~13Ω to 25 Ω, in order to reduce the reflection at the antenna port for a given plasma load. The latter value is the same as the ASDEX-U feedline characteristic impedance. This was accomplished by reducing the width of the crossover lead from 18 cm to 9 cm. The calculations were based on measurements of the scattering parameters at the antenna input ports made before and after the modification. These were used to determine the antenna input impedances assuming that the feed line voltages were equal in magnitude at the location of the voltage maxima, but with opposite

phase. As can be seen in the figure, the value of R_c on the crossover antenna (strap 2) is increased by up to a factor of two at some frequencies as a result of the modification. The shape of the two curves after modification for all frequencies is more nearly equal as well. There is also a small change in the R_c profile for the other strap because of the mutual coupling between the straps. If the maximum power to the system is limited by the maximum voltage in the feedline, then the decrease in the VSWR in the crossover feedline should allow an increase in the maximum power by the same factor.

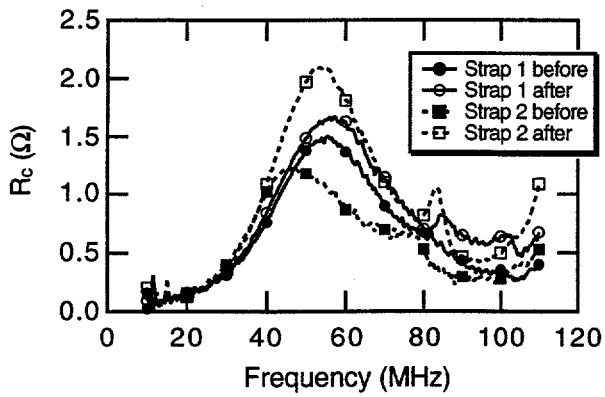

Fig. 3 Coupling resistance in dipole phasing as a function of frequency for the ASDEX-Upgrade antenna before and after modification of the crossover impedance.

The FDAC [25] network modeling code allows modeling of nearly arbitrary configurations of matching networks, decoupling networks, and coupled antennas. It calculates impedances, scattering matrices, tuning element settings, decoupler settings, and currents and voltages along the network. This code was used to predict the performance of the feed circuits for the DIII-D FWCD arrays with regards to ELM handling. These arrays are configured (see Fig. 4) so that the relative phasing between antennas can be adjusted for equal phase increments of 0, $\pm \pi/2$, and π. The antennas are grouped into two pairs fed by resonant loops , which in turn are fed by a hybrid power splitter. When the relative phase between the pairs is adjusted to be $\pm \pi/2$, then reflected waves at the matching stubs caused by equal changes in loading on both strap pairs cancel at the input to the power splitter. This allows the generator to see a constant load during events such as ELMs, even though the load seen by individual antennas can vary by as much as a factor of 10, while using only passive elements. Fig. 5 shows a calculation of the reflection coefficient on both sides of the hybrid power splitter as the load increased by a factor of three from the matched value. The calculation was performed at frequencies of 60 MHz and 80 MHz, which are approximately the frequencies of the original and new DIII-D FWCD systems. It can be seen that the reflection coefficient maintains a very low value on the generator side of the power splitter despite the large increase on both ports on the antenna side. Additional FDAC calculations have shown that decreases in antenna mutual coupling and self inductance that should accompany increases in resistive load should have little effect on this performance. Preliminary measurements made on one of the DIII-D ICRF array feed networks during plasma operations indicate that the system does indeed behave as expected.

Improved modeling the feedlines and antenna structures has led to increased accuracy in the determination of the wavenumber spectrum launched by antenna arrays. Models such as RANT-3D [34] and PICES [35] are now able to predict the plasma loading of antennas quantitatively for the first time. This capability is particularly useful for ITER [25] and other machines where the expense of redesigning antennas after initial operation is prohibitive.

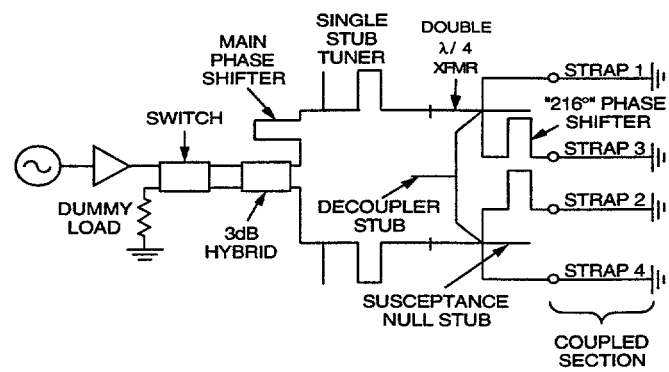

Fig. 4 Schematic diagram of the long-pulse FWCD antennas on DIII-D.

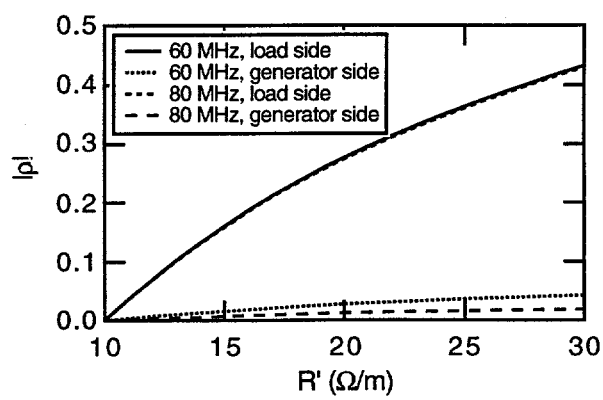

Fig. 5 Magnitude of reflection coefficient on both sides of the hybrid power splitter as a function of load resistance. The tuners were set for a match with 10 Ω/m loading.

ISSUES FOR FUTURE DEVELOPMENT

Conditioning of ICRF antennas has made progress despite the empirical nature of our knowledge on this subject [36]. The maximum antenna voltage level obtained during plasma operation is usually around 70% of the value achievable

during vacuum conditioning. The exact mechanism responsible for this reduction is unknown. It is observed that the antenna condition deteriorates during plasma operation, whether or not RF is applied to the antenna. Several machines conduct vacuum conditioning routinely between plasma shots in order to maintain the antenna voltage handling as much as possible.

The typical ICRF experiment can deliver up to 75% of the maximum transmitter design power, with approximately 80% to 95% of that coupled into the plasma under the best of conditions. The reasons for this are several. Chief among them is that the load presented by the plasma is not constant, being affected by plasma position, by fluctuations in plasma edge conditions, L- to H-mode transitions, etc. Transmitter specifications tend to be ambitious and are not easily achieved except into a broadband dummy load. The high Q loads presented by the short (with respect to a wavelength) loop antennas that will fit into the vacuum vessel often cause high reflected signals in the bandwidth of the transmitter leading to spurious resonances or oscillation which reduce the maximum power that can be attained by the transmitter. Transmission line components tend to be specified near their ideal voltage limits in order to reduce the overall system cost. The system as a whole is rarely as robust as the ideal. The failure of any one component in the system can result in voltages exceeding the design value elsewhere in the system. Surprisingly, perhaps, transmission line problems account for a high percentage of the failures experienced in ICRF systems. High power tuners introduce additional failure mechanisms due to their internal moving parts and external drive systems.

Transmission line components remain a concern for present experiments, and will require considerable development for ITER and beyond where the intense x-ray and neutron fluxes likely render ceramic center conductor supports unusable. All-metal waveguide supports are under development by JAERI for ITER [2]. There is a tradeoff to be made between locating tuning elements close to or in the antenna structure, with increased complexity of remote maintenance, and having long runs of transmission line with a high voltage standing wave ratio. The Tore Supra resonant double loop antennas [16], with full impedance matching accomplished in the antenna structure, represent one extreme; the DIII-D FWCD arrays [4-5,18] with all impedance matching elements located remotely with respect to the antenna represent the other extreme. Incorporating some sort of simple pre-tuning element as close to the antenna as possible is one approach that has been tried with success on JET [3]. This issue is obviously not entirely settled at the present.

A difficult problem facing antennas operating in H-mode plasmas is how to maintain full power operation in the face of changing plasma loading on a fairly rapid time scale. The transition between L- and H-modes typically results in a substantial reduction in plasma loading of the antenna due to the steepening of the edge density profile and reduction in plasma density in the vicinity of the antenna. The various ELMs occurring in H-mode plasmas can cause large increases in plasma loading which detune the antenna. In addition to having to cope with these fast plasma load changes, the system must be able to remove the RF power almost instantaneously to prevent damage to the antenna or transmission line components. This is an area of active investigation, with many methods of ELM/arc discrimination being proposed [24,26-27]. Unfortunately, there is not a great deal of data available on this subject yet. Methods of handling ELMs and arcs for existing antennas are being tested for implementation in the near term. Other methods, involving radically different antenna designs have also been proposed. In the case of FWCD systems being driven at 90° phasing by a hybrid splitter, such as DIII-D, the splitter provides a natural dump for common mode load changes [25], such as occur during ELMs.

Another area where future development is required is the interaction between the edge plasma and Faraday shield. Loop antennas have high currents and large voltages just behind the Faraday shield, giving rise to induced voltages on the antenna housing. These induced voltages can drive plasma sheaths immediately in front of the antenna, which, in turn, result in sputtering of the Faraday shield surface or first wall materials in close proximity to the antenna [37].

SUMMARY

The technology has made tremendous strides in the past ten years, and looks to be in good shape to handle the next generation system requirements such as TPX and ITER. The concept of how to cope with higher thermal and mechanical loads seems to be in hand; the only question is in choosing the best configuration that yields the practical field reliability needed.

REFERENCES

[1] Baity, F. W., et al., "The technology of fast wave current drive antennas," Fusion Engrg. Design, 24 (1994) 91-102.

[2] Kimura, H., et al., "Radiofrequency launchers for plasma heating and current drive," Nucl. Fusion, 35 (1995) 619-628.

[3] Kaye, A., et al., "Present and future JET ICRF antennae," Fusion Engrg. Design, 24 (1994) 1-22.

[4] Baity, F. W., et al., "Fast-wave current drive system for DIII-D," in Fusion Technology (Proc. 16th Symp. London, 1990), Vol. 2, North-Holland, Amsterdam (1990) 1035-1039.

[5] Baity, F. W., et al., "Design of long-pulse fast wave current drive antennas for DIII-D," in *Radiofrequency Power in Plasmas* (Proc. 10th Topical Conf. Boston, 1993), 343-346.

[6] Wesner, F., et al., "The 4 x 2 MW ICRH system for ASDEX Upgrade," in Fusion Technology (Proc. 16th Symp. London, 1990), Vol. 2, North-Holland, Amsterdam (1990) 1181-1185.

[7] Noterdaeme, J.-M., et al., "The ASDEX Upgrade ICRH antenna," Fusion Engrg. Design, 24 (1994) 65-74.

[8] Bonanos, P., et al., "Design of an ICRF antenna for TFTR," in Fusion Technology (Proc. 16th Symp. London, 1990), Vol. 2, North-Holland, Amsterdam (1990) 1003-1006.
[9] Raftopoulos, S., et al., "Design of ICRF antennas for TFTR," in Proc. 14th Symp. on Fus. Engrg. San Diego, 1991,in Proc. 14th Symp. On Fus. Engrg. San Diego, 1991, 111-114.
[10] Van Oost, G., et al., "The high power (3-MW) long-pulse (3-s) radio-frequency system for ion cyclotron heating experiments on TEXTOR," Fusion Technol., 12 (1987) 449-475.
[11] Golovato, S. N., et al., "Antennas for ICRF heating in the Alcator C-Mod tokamak," in Proc. 15th Symp. on Fus. Engrg. Hyannis, 1993, 1069-1072.
[12] Golovato, S. N., et al., (Proc. 21st EPS Conf. on Contr. Fus. and Plasma Phys., 1994), Vol. 18B, Part II, 992.
[13] Mutoh, T., et al., "ICRF antenna design in Large Helical Device," in Proc. 14th Symp. on Fus. Engrg. San Diego, 1991, 103-106.
[14] Fujii, T., et al., "Mechanical design and analysis of JT-60U ICRF launcher," in Proc. 14th Symp. on Fus. Engrg. San Diego, 1991, 107-110.
[15] Saigusa, M., et al., "Electrical design and test of ICRF antenna for JT-60U," Fusion Engrg. Design, 24 (1994) 47-64.
[16] Saigusa, M., et al., "High coupling performance of JT-60U ICRF antennas," Nucl. Fusion, 34 (1994) 276-282.
[17] Becraft, W. R., et al., "Compact loop launcher design study for Tore Supra," Proc. 13th Eur. Conf. Contr. Fusion and Plasma Heating Schliersee, 1986, Vol. 10C, 161-164.
[18] Ryan, P. M., et al., "Integrated design and analysis of RF heating and current drive systems," in *Radiofrequency Power in Plasmas* (Proc. 11th Topical Conf. Palm Springs, 1995), in press.
[19] Pinsker, R. I., et al., "30-60 MHz FWCD system on DIII-D: power division, phase control and tuning for a four-element antenna array," in Proc. 14th Symp. on Fus. Engrg. San Diego, 1991, 115-117.
[20] Goulding, R. H., et al., "Phased operation of the DIII-D FWCD antenna array with a single power source," Fusion Engrg. Design, 24 (1994) 103-133.
[21] Petty, C. C., et al., "Fast wave and electron cyclotron current drive in the DIII-D tokamak," Nucl. Fusion, 35 (1995) 773-786.
[22] Pinsker, R. I., et al., "Experimental test of a two-port decoupler in the DIII-D fast wave current drive system," in Proc. 15th Symp. on Fus. Engrg. Hyannis, 1993, 1077-1080.
[23] Goulding, R. H., et al., "Automatic Matching and Phase Control of Multiple Element ICRF Antennas," Bull. Am. Phys. Soc., 38, (1993) 2107.
[24] Goulding, R. H., et al., "A power compensation system for phased operation of the JET A2 antenna arrays," in Fusion Technology (Proc. 17th Symp. Rome, 1992), Vol. 1, North-Holland, Amsterdam (1993) 515-519.
[25] R.H. Goulding et al., "Global ICRF Systems Designs for ITER and TPX," in *Radiofrequency Power in Plasmas* (Proc. 11th Topical Conf. Palm Springs, 1995), in press.
[26] Durodié, F. and Vervier, M., "First results of the automatic matching and control device for TEXTOR's ICRH system," in Fusion Technology (Proc. 17th Symp. Rome, 1992), Vol. 1, North-Holland, Amsterdam (1992) 477-480.
[27] Kumazawa, R., et al., "Feedback control matching system for temporal change of plasma loading resistance in high power/steady state ICRF heating of the Large Helical Device," in Fusion Technology (Proc. 17th Symp. Rome, 1992), Vol. 1, North-Holland, Amsterdam (1992) 554-558.
[28] Moeller, C. P., et al., "Combline antennas for launching traveling fast waves," in *Radiofrequency Power in Plasmas* (Proc. 10th Topical Conf. Boston, 1993), 323-326.
[29] Remsen, D. B., et al., "Results of tests of the X2274 high power tetrode in a JT-60U 110 to 130 MHz ICRH amplifier," in Fusion Technology (Proc. 16th Symp. London, 1990) Vol. 2, North-Holland, Amsterdam (1990) 1156-1160.
[30] Owens, T. L., "A folded waveguide coupler for plasma heating in the ion cyclotron range of frequencies," IEEE Trans. Plasma Sci., PS-14 (1986) 934-946.
[31] Hoffman, D. J., et al., "Folded waveguide designs for tokamaks," in *Radiofrequency Power in Plasmas* (Proc. 10th Topical Conf. Boston, 1993), 327-330.
[32] Haste, G. R., et al., "The folded waveguide: a high frequency rf launcher," Fusion Engrg. Design, 24 (1994) 191-204.
[33] Ryan, P. M., "Methods of calculating selected geometrical effects in the design of ICRH antennas," Fusion Engrg. Design, 24 (1994) 135-158.
[34] Carter, M. D., et al., "Three-dimensional modeling of ICRF launchers for fusion devices," to be published in Nucl. Fus.
[35] Jaeger, E. F., "Influence of various physics phenomena on fast wave current drive in tokamaks," Nucl. Fusion, 33 (1992) 179.
[36] Baity, F. W., et al., "Commissioning of the long-pulse fast wave current drive antennas for DIII-D," in *Radiofrequency Power in Plasmas* (Proc. 11th Topical Conf. Palm Springs, 1995), in press.
[37] Haste, G. R., et at., "Effect on antenna structure of high-power RF during plasma operation," in *Radiofrequency Power in Plasmas* (Proc. 11th Topical Conf. Boston, 1993), 347-350.

DISCLAIMER

This report was prepared as an account of work sponsored by an agency of the United States Government. Neither the United States Government nor any agency thereof, nor any of their employees, makes any warranty, express or implied, or assumes any legal liability or responsibility for the accuracy, completeness, or usefulness of any information, apparatus, product, or process disclosed, or represents that its use would not infringe privately owned rights. Reference herein to any specific commercial product, process, or service by trade name, trademark, manufacturer, or otherwise does not necessarily constitute or imply its endorsement, recommendation, or favoring by the United States Government or any agency thereof. The views and opinions of authors expressed herein do not necessarily state or reflect those of the United States Government or any agency thereof.