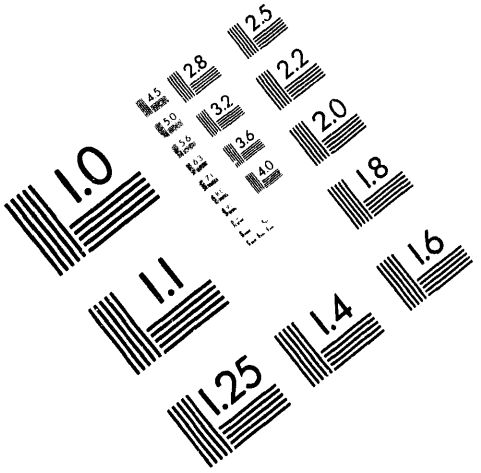

AIIM

Association for Information and Image Management

1100 Wayne Avenue, Suite 1100
Silver Spring, Maryland 20910

301/587-8202

Centimeter

1 2 3 4 5 6 7 8 9 10 11 12 13 14 15 mm

1 2 3 4 5

Inches

MANUFACTURED TO AIIM STANDARDS
BY APPLIED IMAGE, INC.

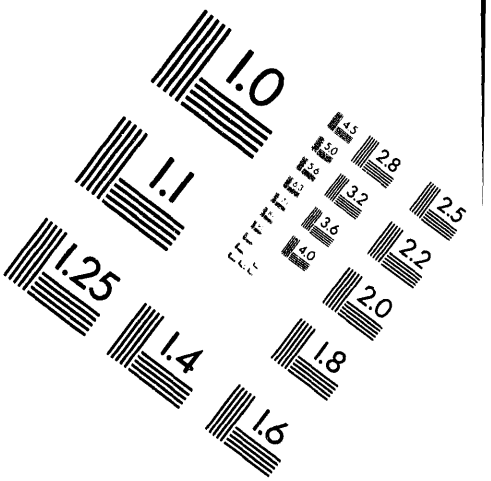

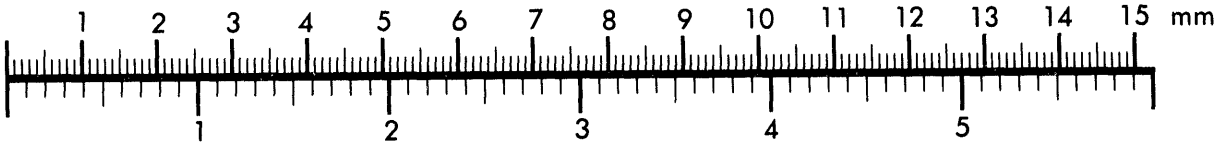

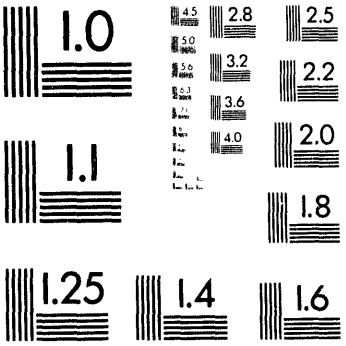

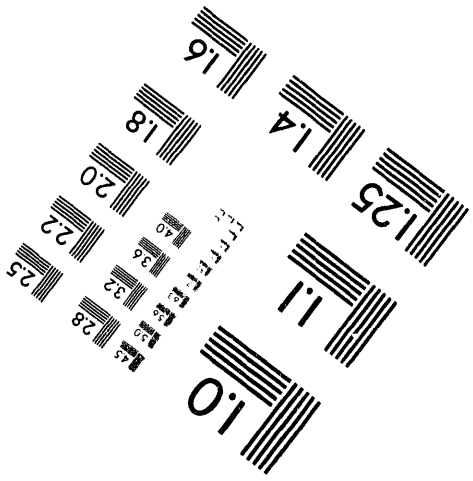

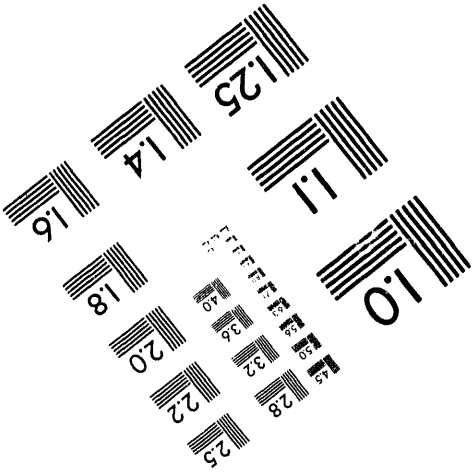

1 of 1

Conf-9403124--2

AIR SAMPLING AT OAK RIDGE NATIONAL LABORATORY

D. C. Gregory
Office of Radiation Protection
Health Physics Instrument Committee
Stationary HP Instrument Upgrade Project
Oak Ridge National Laboratory*
Building 5505, MS-6375
P. O. Box 2008
Oak Ridge, TN 37831

Sixth Air Monitoring Users Group
March 21 - 24, 1994
Carlsbad, NM

"The submitted manuscript has been authored by a contractor of the U. S. Government under contract No. DE-AC05-84OR21400. Accordingly, the U. S. Government retain a nonexclusive, royalty-free license to publish or reproduce the published form of this contribution, or allow others to do so, for U. S. Government purposes."

---

*Managed by Martin Marietta Energy Systems, Inc., for the U.S. Department of Energy under Contract DE-AC05-84OR21400.

MASTER

DISTRIBUTION OF THIS DOCUMENT IS UNLIMITED

AIR SAMPLING at
OAK RIDGE NATIONAL LABORATORY

New and more detailed requirements for air sampling and real-time monitoring contained in DOE Order 5480.11 (revised), Rule 10 CFR 835, and the RadCon Manual made it necessary to review and update ORNL's air sampling/monitoring program. In the past, real-time air monitors have been used exclusively as permanent stationary instruments at ORNL. Air samplers have been used exclusively for coverage of short jobs. In the future, these traditional uses will be expanded as some air samplers are treated as permanent stationary instruments and some real-time air monitors are used for coverage of relatively short jobs. The modernization of ORNL's air monitoring program is one of the more difficult parts of a general stationary Health Physics instrument upgrade program.

As the first step in upgrading the air sampling/monitoring program, facilities were evaluated using the protocol suggested in the draft NUREG-1400. Based on those evaluations, we conclude that over half of ORNL's present inventory of real-time air monitors should be eliminated or replaced by air samplers. The remaining permanently installed real-time air monitors may provide some degree of protection for employees. However, none of the permanently installed air samplers or real-time monitors are required according to the criteria found in DOE Orders, Rules, and guidance. All of the permanent units are considered to be for ALARA purposes.

The determination of the technical need for air samplers and real-time air monitors was only the first step in upgrading the air monitoring program. Users and owners had to be educated concerning the capabilities, recommended uses, and relative merits of air samplers and real-time air monitors. Safety documents had to be modified in order to allow the removal or replacement of units which were long ago declared to be safety-related without sufficient technical justification or need. Funding had to be found to support the initial purchase of a significant number of new full-time air samplers in order to firmly establish the program.

Finally, specifications were written for both high- and low-volume air samplers, based on ORNL's specific needs. No commercial samplers were found which met the requirements, but all necessary components are readily available to construct suitable units. The only desired feature not included was regulated or totalized air flow. An elapsed-time indicator and calibrated flow rate meter allow a simple and accurate calculation of total sample volume under normal conditions.

Two types of air samplers are being constructed for use at ORNL, with each unit costing under $1000. A low-volume air sampler operating at about 3-5 CFM will be permanently located where constant sampling is desired. The unit incorporates noise-minimizing features and gives the appearance of an "installed" instrument. These features should prevent complaints about the

noise usually associated with air samplers, and will discourage casual relocation of these "permanent" samplers. The high-volume sampler is easily portable, samples at "breathing zone" height, and operates at more than 10 CFM. The high-volume sampler is intended for coverage of special jobs lasting between one and four hours. Both types of samplers are being assembled and will be installed in the next few months. The new air samplers that replace real-time air monitors are expected to pay for themselves within a year due to lower maintenance and calibration costs.

DISCLAIMER

This report was prepared as an account of work sponsored by an agency of the United States Government. Neither the United States Government nor any agency thereof, nor any of their employees, makes any warranty, express or implied, or assumes any legal liability or responsibility for the accuracy, completeness, or usefulness of any information, apparatus, product, or process disclosed, or represents that its use would not infringe privately owned rights. Reference herein to any specific commercial product, process, or service by trade name, trademark, manufacturer, or otherwise does not necessarily constitute or imply its endorsement, recommendation, or favoring by the United States Government or any agency thereof. The views and opinions of authors expressed herein do not necessarily state or reflect those of the United States Government or any agency thereof.

ORNL AIR SAMPLERS

CURRENT INVENTORY

111 Alpha Air Monitors
126 Beta Air Monitors
No Official Air Samplers

LOCATIONS (Required by RadCon and 10 CFR 835)

Air monitoring is required in occupied areas where a person is likely to receive an ALI with normal operations, or where unexpected increases in airborne activity are predicted.

Air sampling is required in occupied areas where a person under normal operating conditions is likely to receive a CEDE in excess of 100 mrem.

ORNL has no areas where air sampling or air monitoring can be technically justified as REQUIRED for normal operations. Samplers and monitors are located based on NUREG 1400 Hazard Analysis and ALARA considerations.

FUTURE: Considering ORNL's decreased material inventories and aging, unwieldy air monitors, the expected inventory in one to two years will be:

50 alpha air monitors, about half new
50 beta air monitors, about half new
150 new (controlled) air samplers

BARRIERS TO IMPLEMEMTATION

Technical Basis Needed for Use and Placement

Education of Users for Appropriate Air Monitoring

Existing Monitors are OSR-required Safety Class Items

Initial Implementation of Numerous Units Expensive

ORNL Air Samplers

Design Requirements

Flow Rate through 47 mm filter

Hi-Vol - At least 10 CFM
Lo-Vol - At least 3 CFM

Portability

Hi-Vol - Easily movable, Breathing Zone sample
Lo-Vol - Semi-Permanent installation

LOW NOISE

Calibration possible even after use in Contamination Areas

Additional Features

Elapsed Time Indicator
Simple Construction, Easy Maintenance
Low Cost
OSHA Inspected
(Regulated, Totaled Air Flow)

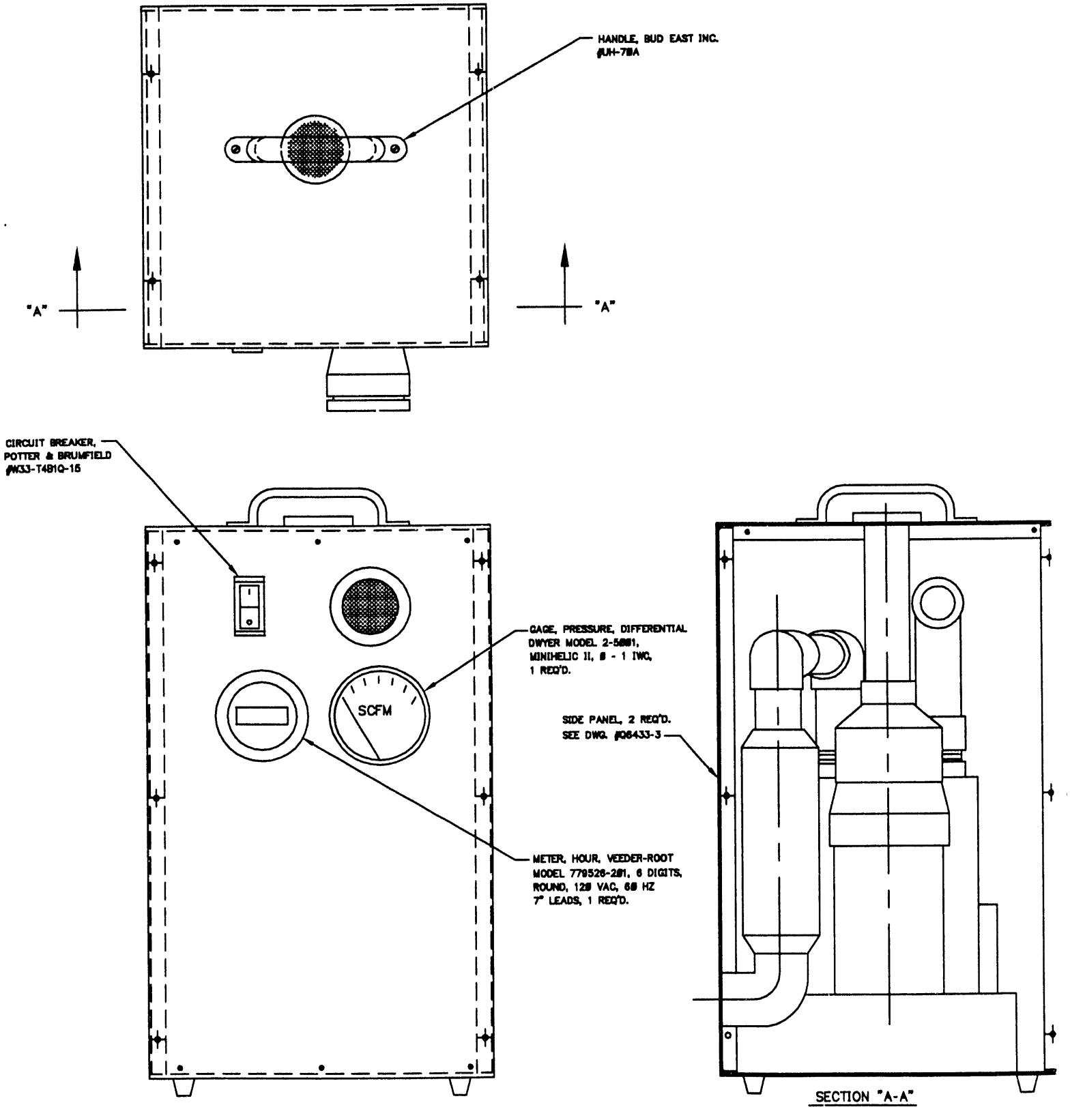

LOW VOLUME FIXED FILTER AIR SAMPLER

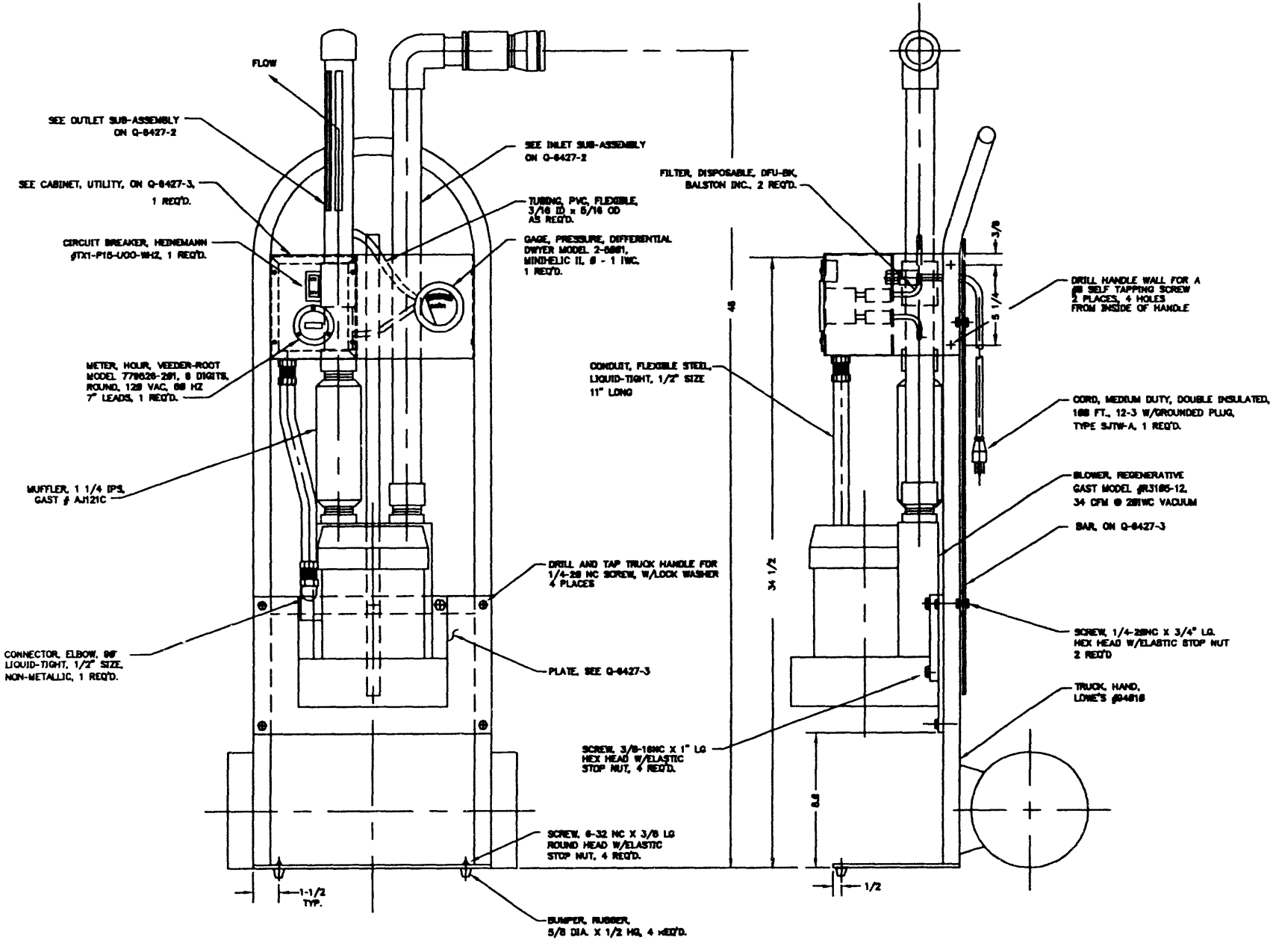

HIGH VOLUME FIXED FILTER AIR SAMPLER

DATE
FILMED
9/29/94

END