PNL-8730 Vol. 3
UC-350

VANDENBERG AIR FORCE BASE INTEGRATED RESOURCE ASSESSMENT

VOLUME 3: RESOURCE ASSESSMENT

K. K. Daellenbach
J. E. Dagle
A. L. Dittmer
D. B. Elliott
M. A. Halverson
B. J. Hickman
G. B. Parker
E. E. Richman
S. A. Shankle

June 1993

Prepared for
the U.S. Department of Energy
Federal Energy Management Program
under Contract DE-AC06-76RLO 1830

Pacific Northwest Laboratory
Richland, Washington 99352

MASTER

ABSTRACT

The U.S. Air Force Space Command (SPACECOM) has tasked the Pacific Northwest Laboratory (PNL),[a] as the lead laboratory supporting the U.S. Department of Energy (DOE) Federal Energy Management Program (FEMP), to identify, evaluate, and assist in acquiring all cost-effective energy projects at Vandenberg Air Force Base (VAFB). This is part of a model program that PNL is designing to support energy-use decisions in the federal sector.

This report provides the results of the fossil fuel and electric energy resource opportunity (ERO) assessments performed by PNL at the SPACECOM VAFB facility located approximately 50 miles northwest of Santa Barbara, California. It is a companion report to Volume 1, Executive Summary, and Volume 2, Baseline Detail.

The results of the analyses of EROs are presented in ten common energy end-use categories (e.g., boilers and furnaces, service hot water, and building lighting). In addition, a case study of process loads at Space Launch Complex-4 (SLC-4) is included. A narrative description of each ERO is provided, including information on the installed cost, energy and dollar savings; impacts on operation and maintenance (O&M); and, when applicable, a discussion of energy supply and demand, energy security, and environmental issues. A description of the evaluation methodologies and technical and cost assumptions is also provided for each ERO. Summary tables present the cost-effectiveness of energy end-use equipment before and after the implementation of each ERO and present the results of the life-cycle cost (LCC) analysis indicating the net present value (NPV) and value index (VI) of each ERO. Finally, an appendix includes a summary of an economic analysis case study of the South Vandenberg Power Plant (SVPP) operating scenarios.

(a) Pacific Northwest Laboratory is operated for the U.S. Department of Energy by Battelle Memorial Institute under Contract DE-AC06-76RLO 1830.

SUMMARY

The U.S. Air Force Space Command (SPACECOM) has tasked the Pacific Northwest Laboratory (PNL), as the lead laboratory supporting the U.S. Department of Energy (DOE) Federal Energy Management Program (FEMP), to identify, evaluate, and assist in acquiring all cost-effective energy projects at Vandenberg Air Force Base (VAFB). This is part of a model program that PNL is designing to support energy-use decisions in the federal sector. This report describes the methodology used to identify and evaluate the energy resource opportunities (EROs) at VAFB, provides a life-cycle cost (LCC) analysis for each ERO, and prioritizes the EROs based first upon whether or not they have a positive net present value (NPV) and second upon their value index (VI). The VI (the ratio of NPV to the present value of installed cost) is used to prioritize EROs and is only applied to projects deemed cost-effective by nature of their positive NPV. EROs with negative NPVs, therefore, will not have an associated VI measurement. Analysis results are presented in ten common energy end-use categories (e.g., boilers and furnaces, service hot water, and building lighting) as well as the South Vandenberg Power Plant (SVPP). In addition, a case study of process loads at Space Launch Complex-4 (SLC-4) is included.

As illustrated in Table S.1, the present value (PV) of the installed cost of all EROs constituting the minimum LCC efficiency resource (i.e., cost-effective) at VAFB is approximately $18.3 million in 1992 dollars (1992$). The PV of the savings associated with this investment is approximately $45.7 million, for an overall NPV of $27.4 million.

TABLE S.1. Total Savings, Cost, and NPV (1992$)

Total Present Value of Installed Cost	Total Present Value of Energy Savings	Total Present Value of Demand Savings	Total Present Value of O&M Savings	Total Present Value of Replacement Savings	Total Present Value of All Savings	Total Net Present Value
18,346,343	24,458,892	7,081,085	8,950,165	5,221,154	45,711,296	27,364,921

Table S.2 provides a breakdown and summary of the cost-effective electricity resource at VAFB. Cost-sharing and rebate incentives from the utility would normally be factored into the analysis. Because the potential demand-side management (DSM) relationship with the electric utility, Pacific Gas and Electric (PG&E), is so uncertain, SPACECOM and VAFB project managers agreed that this document would present an economic analysis from the government-funding-only perspective. That way if no cost-sharing with the utility could be arranged, the document would still be useful to the U.S. Air Force (USAF) in its planning for implementation of various EROs. Once details of a cost-sharing agreement with the utility has been reached, the economic analysis can be redone at any time.

The operations and maintenance (O&M) savings are a reflection of the incremental cost difference between the cost of maintaining the existing equipment and that of maintaining new or retrofitted equipment. Because maintenance costs of new or retrofitted equipment are often the same as the costs to maintain the existing equipment, this incremental maintenance cost is often zero.

To accompany Table S.2 is Table S.3, which presents a breakdown and summary of both the energy and demand savings for the first-year and full implementation of the cost-effective electricity resource at VAFB.

TABLE S.2. Summary of the Cost-Effective Electric Resource at VAFB (1992$)

ERO Category	Present Value of Installed Cost	Present Value of Energy Savings	Present Value of Demand Savings	Present Value of O&M Savings	Present Value of Replac. Savings	Present Value of Total Savings	Net Present Value
Lighting	6,712,768	7,132,365	2,046,905	5,071,339	0	14,250,609	7,537,840
Motors	270,223	1,493,715	16,145	0	152,538	1,662,398	1,392,176
Trans&Dist	6,727,565	1,475,090	195,336	2,987,085	5,794,344	7,464,770	737,205
SVPP[a]	0	5,872,259	4,886,082	-59,314	0	10,699,027	10,699,027
Totals	13,710,556	15,973,429	7,144,468	7,999,110	5,946,882	34,076,804	20,366,248

(a) See Appendix. SVPP O&M savings consists of $560,288 credit from sale of emission permits, less $619,602 increased O&M. SVPP reported values are for 1994. Generation will decline over time. While the analysis for the Volume 3: Resource Assessment used a 4.6% discount rate, the SVPP analysis (PNL-8556) used a 4.0% discount rate.

TABLE S.3. Summary of the Electric Energy and Demand Savings

ERO Category	First-Year Energy Savings (MBtu)	Full Implement. Energy Savings (MBtu)	First-Year Demand Savings (kW-mo)	Full Implement. Demand Savings (kW-mo)
Lighting	31,586	31,586	27,279	27,279
Motors	6,776	7,051[a]	215	215[b]
Trans & Dist	0	10,775[a]	0	4,325
SVPP[c]	(c)	(c)	(c)	(c)
Totals	38,362	49,412	27,494	31,819

(a) Energy savings increases between first-year and full implementation because of additional implementation of replace-on-failure (ROF) opportunities.

(b) The full implementation demand savings for motors does not increase over first-year demand savings because of uncertainty about the ROF motor contribution to the monthly peak demand.

(c) See Appendix. First-year energy and demand savings will be 234,440 MBtu and 51,300 kW-mo, respectively. During the remaining 17-year life of the gas turbines at the SVPP, electricity generation and the related natural gas use will decline over time, resulting in reduced energy and demand savings for subsequent years.

Table S.4 provides a breakdown and summary of cost-effective fossil fuel resource opportunities at VAFB. The economic analysis presented below considered natural gas and propane only. Potential EROs affecting fuel oil use were considered in the initial screening evaluation (see Table 1.1) but it was determined in discussions with VAFB personnel that because VAFB was already phasing-out use of fuel oil wherever possible, these EROs would not be considered further. This phase-out is primarily a result of increasing restrictions on air emissions mandated by the Santa Barbara Air Pollution Control District (SBAPCD).

TABLE S.4. Summary of Cost-Effective Fossil Fuel Resource at VAFB (1992$)

ERO Category	Present Value of Installed Cost	Present Value of Energy Savings	Present Value of O&M Savings	Present Value of Replacement Savings	Present Value of Total Savings	Net Present Value
Space Heating	1,745,786	2,858,824	0	318,463	3,177,287	1,431,502
Transportation	892,398	2,598,956	2,987,085	(1,160,588)	4,425,453	3,533,055
Water Heating	141,833	719,219	0	(102,152)	617,066	475,234
Totals	2,780,017	6,176,999	2,987,085	(944,277)	8,21,806	5,439,791

To accompany Table S.4 is Table S.5, which presents a breakdown and summary of both the energy and demand savings for the first-year and full implementation of the cost-effective fossil fuel resource at VAFB.

Because of time, funding, and information availability constraints, the scope of this assessment only considered process energy conservation at SLC-4. Table S.6 provides a breakdown and summary of the cost-effective process EROs developed for the case study at SLC-4. This SLC was chosen for the following reasons:

1) SLC-4 has the greatest energy use of any active SLC and, therefore, has potential for a large energy savings impact.

2) Due to the secure nature of missions at the SLCs, significant assistance was required from SLC operating personnel to obtain the necessary data for economic analysis. This type of assistance was only provided at SLC-4.

TABLE S.5. Summary of the Fossil Fuel Energy and Demand Savings

ERO Category	First-Year Energy Savings (MBtu)	Full Implement. Energy Savings (MBtu)	First-Year Demand Savings (kW-mo)	Full Implement. Demand Savings (kW-mo)
Space Heating	27,860	27,860	0	0
Transportation	20,406	20,410 [a]	0	0
Water Heating	5,470	8,339 [a]	0	0
Totals	53,736	56,609	0	0

(a) Energy savings increases between first-year and full implementation because of additional implementation of replace-on-failure (ROF) opportunities.

TABLE S.6. Summary of Cost-Effective Process Resource at SLC-4 (1992$)

ERO Category	Present Value of Installed Cost	Present Value of Energy Savings	Present Value of Demand Savings	Present Value of O&M Savings	Present Value of Replacement Savings	Present Value of Total Savings	Net Present Value
Process Total	1,855,800	2,308,464	(63,383)	951,055	218,549	3,414,685	1,558,883

3) The SLC-4 mission is relatively stable compared to the transient nature of the missions at other SLCs. For example, the SLC-5 mission to launch Scout missiles will be changing when the current supply of Scout missiles is depleted (about three years).

The SLC-4 analysis is generally conservative because this SLC is the most modern at VAFB and, consequently, energy savings are more difficult to achieve. Although differences exist between process and procedural requirements in handling the different vehicle types, energy conservation the other SLCs may be possible by applying some of the EROs considered at SLC-4.

To accompany Table S.6 is Table S.7, which presents a breakdown and summary of both the energy and demand savings for the first-year and full implementation of the cost-effective process resource at VAFB.

TABLE S.7. Summary of the Process Energy and Demand Savings

ERO Category	First-Year Energy Savings (MBtu)	Full Implement. Energy Savings (MBtu)	First-Year Demand Savings (kW-mo)	Full Implement. Demand Savings (kW-mo)
Process	4,966	4,966	-842[a]	-842

(a) The negative demand savings result from the increased demand for electricity due to a fuel switch from nitrogen.

Table S.8 presents a breakdown and summary of the cost-effective resource determined within this ERO assessment by fuel type.

TABLE S.8. Summary of Cost-Effective Resource by Fuel Type

Exist. Fuel	Present Value of Installed Cost	Present Value of Energy Savings	Present Value of Demand Savings	Present Value of O&M Savings	Present Value of Replacement Savings	Present Value of Total Savings	Net Present Value
Propane	38,345	153,795	0	0	7,342	161,119	122,774
Nat. Gas	1,849,274	3,424,248	0	0	208,987	3,633,235	1,783,961
Elect.	13,710,556	10,101,170	2,258,386	5,071,339	5,946,882	23,377,777	9,667,221
FlSw(a,b)	2,748,198	10,779,679	4,822,699	3,878,826	(942,039)	18,539,165	15,790,965
Totals	18,346,373	24,458,892	7,081,085	8,950,165	5,221,154	45,711,296	27,264,921

(a) SVPP O&M savings consists of $560,288 credit from sale of emission permits, less $619,602 increased O&M. While the analysis for the Volume 3: Resource Assessment used a 4.6% discount rate, the SVPP analysis (PNL-8556) used a 4.0% discount rate.
(b) Fuel-Switch includes process, transportation, and SVPP EROs.

To accompany Table S.8 is Table S.9, which presents a breakdown and summary of both the energy and demand savings for the first-year and full implementation for different fuel types at VAFB.

Table S.10 presents a breakdown and summary of the total fuel balance at VAFB. Total existing fuel use is based on information developed for the Volume 2 Baseline Detail companion report to this document. Total fuel use after ERO implementation was determined, where possible, by subtracting the

total fuel savings from the total existing fuel use. In addition, percent savings of existing fuel use is presented where possible.

TABLE S.9. Summary of the Energy and Demand Savings by Fuel Type

ERO Category	First-Year Energy Savings (MBtu)	Full Implement. Energy Savings (MBtu)	First-Year Demand Savings (kW-mo)	Full Implement. Demand Savings (kW-mo)
Electricity	38,362	49,412[a]	27,494	31,819
Fuel-Switch[b]	25,372	25,376[a]	-842[c]	-842
Nat. Gas	31,818	34,685[a]	0	0
Propane	1,514	1,514	0	0
Totals[d]	97,066	110,987	26,652	30,977

(a) Energy savings increases between first-year and full implementation because of additional implementation of replace-on-failure (ROF) opportunities.
(b) Fuel-Switch includes process, transportation, and SVPP EROs.
(c) The negative demand savings result from the increased demand for electricity due to a fuel-switch from nitrogen.
(d) See Appendix. Energy and demand savings for the SVPP, which are not included, are -234,440 MBtu and 51,300 kW-mo, respectively. During the remaining 17-year life of the gas turbines at the SVPP, electricity generation and the related natural gas use will decline over time, resulting in reduced energy and demand savings for subsequent years.

TABLE S.10. Fuel Balance at VAFB

ERO Category	Total Existing Fuel Use (MBtu/yr) (a) (from Volume 2: Baseline Detail)						Total Fuel Use (MBtu/yr) After ERO Implementation						Total Fuel Savings (MBtu/yr) with ERO Implementation and Percent (%) Saved of Existing Fuel Use												
	Electric(b) (MBtu/yr)	Natural Gas(c) (MBtu/yr)	Propane(d) (MBtu/yr)	Diesel(e) (MBtu/yr)	Unleaded Gas.(f,g) (MBtu/yr)	Nit.(g) (Tons)	Electric (MBtu/yr)	Natural Gas (MBtu/yr)	Propane (MBtu/yr)	Diesel (MBtu/yr)	Unleaded Gasoline (MBtu/yr)	Nit. (Tons)	Electric (MBtu/yr)	Electric Saved (%)	Natural Gas (MBtu/yr)	Natural Gas Saved (%)	Propane (MBtu/yr)	Propane Saved (%)	Diesel (MBtu/yr)	Diesel Saved (%)	Unleaded Gasoline (MBtu/yr)	Unleaded Gasoline Saved (%)	Nit. (tons)	Nit. Saved (%)
Lighting	151,117	0	0	0	0	0	119,531	0	0	0	0	0	31,586	21	0	0	0	0	0	0	0	0	0	0
Motors	70,141	0	0	0	0	0	63,090	0	0	0	0	0	7,051	10	0	0	0	0	0	0	0	0	0	0
Process at SLC-4(h)	NA	NA	NA	0	0	NA	NA	NA	NA	0	0	NA	516	NA	2,808	NA	1,642	NA	0	0	0	0	1,982	NA
Space Heating	11,352	347,828	32,420	37,765	0	0	11,352	321,482	30,906	37,765	0	0	0	0	26,346	8	1,514	5	0	0	0	0	0	0
Transportation	0	0	0	NA	NA	0	0	93,208	0	NA	NA	0	0	0	-93,208	NA	0	0	2,568	NA	111,050	NA	0	0
Trans. & Dist.	23,734	0	0	0	0	0	12,959	0	0	0	0	0	10,775	45	0	0	0	0	0	0	0	0	0	0
Water Heating	2,498	196,581	16,777	5,389	0	0	2,498	188,242	16,777	5,388	0	0	0	0	8,339	4	0	0	0	0	0	0	0	0
Other Fuel Use	422,945	84,984	1,255	3,453	0	0	422,429	82,176	-387	3,453	0	0	0	0	0	0	0	0	0	0	0	0	0	0
SubTotal	681,787	629,393	50,452	46,606	NA	NA	631,859	685,108	47,296	46,606	NA	NA	49,928		-55,715		3,156		2,568		111,050		1,982	
SVPP(i)	0	54,607	0	994	0	0	-76,284	365,331	0	994	0	0	76,284		-310,724		0		0	0	0		0	
Total	681,787	684,000	50,452	47,600	NA	NA	555,575	1,050,439	47,296	47,600	NA	NA	126,212		-366,439		3,156		2,568		111,050		1,982	

Notes:

(a): 1 MBtu = 1,000,000 Btu
(b): Electricity: 0.003413 MBtu/kWh
(c): Natural Gas: 0.01 MBtu/Therm
(d): Propane: 0.095 MBtu/gal
(e): Diesel = Fuel Oil #2: 0.1387 MBtu/gal; Volume 2: Baseline Detail use does not include transportation use.
(f): Unleaded Gas: 0.1277 MBtu/gal
(g): No baseline energy use was established for unleaded gasoline or nitrogen in Volume 2: Baseline Detail.
(h): Process use specific to SLC-4 not specifically allocated in Volume 2: Baseline Detail but it is estimated within the Other Fuel Use Category.
(i): South Vandenberg Power Plant (SVPP): Reported values are for 1994. Generation will decline over time. See Appendix. Net Electricity generation with increased natural gas use.
While the analysis for the Volume 3: Resource Assessment used a 4.6% discount rate, the SVPP analysis (PNL-8556) used a 4.0% discount rate.
NA: Information not available.

ACKNOWLEDGMENTS

The authors gratefully acknowledge the assistance of numerous Air Force and Air Force contractor personnel associated with the development of this Integrated Resource Assessment. The people who worked with Pacific Northwest Laboratory staff during site visits as well as over the phone and through the mail were both helpful in delivering us detailed information that increased the value and usefulness of our analysis and enjoyable to work with. While it is not possible to identify all those who provided assistance, we would like to thank the following dedicated individuals: Lt. Col G. Elliott, J. W. Gore, E. Lauterbach, J. Lowsley, R. Miller, Lt. R. Zawadzki, all of Vandenberg Air Force Base (Lompoc, California); C. A. Miller of Air Force Space Command Headquarters (Peterson Air Force Base, Colorado); and the engineering personnel that support SLC-4 (Martin Marietta and the Aerospace Corporation of Lompoc, California). Of particular importance to the completion of this study was the significant and conscientious assistance provided by K. Padilla of Vandenberg Air Force Base.

In addition, the authors thank J. W. Currie, J. A. Dirks, M. M. Hale, M. J. Larson, D. R. Payson, R. W. Reilly, and W. F. Sandusky III, all of Pacific Northwest Laboratory, for their excellent assistance in preparing this document.

CONTENTS

ABSTRACT iii

SUMMARY v

ACKNOWLEDGMENTS xiii

1.0 SELECTION OF ENERGY RESOURCE OPPORTUNITIES 1.1

1.1 ERO PRELIMINARY SELECTION CRITERIA 1.2

1.2 MASTER LIST OF SCREENED AND SELECTED EROs 1.3

2.0 ENERGY RESOURCE OPPORTUNITY EVALUATIONS 2.1

2.1 BOILERS AND FURNACES 2.3

2.1.1 Feedwater Economizers 2.4

2.1.2 Boiler Tuneup 2.5

2.1.3 Automatic Electric Dampers 2.6

2.1.4 New Conventional Boilers 2.7

2.1.5 New Pulse-Condensing Boilers 2.8

2.1.6 Continuous Boiler Blowdown 2.9

2.1.7 New Conventional Furnaces 2.10

2.1.8 New Pulse-Condensing Furnace 2.11

2.2 BUILDING ENVELOPE 2.15

2.2.1 Insulate Attic Ceilings 2.16

2.2.2 Insulate Walls 2.16

2.2.3 Weatherization Package-Caulking/ Weatherstripping 2.17

2.3 SERVICE HOT WATER 2.21

2.3.1 New 76 Percent Efficient Residential Water Heater 2.22

2.3.2 New 80 Percent Efficient Residential Water Heater 2.22

2.3.3 New 85 Percent Efficient Residential Water Heater 2.23

2.3.4 New 94 Percent Efficient Residential Water Heater 2.24

2.3.5 New 80 Percent Efficient Commercial Water Heater 2.25

2.3.6 Tank Insulation with R-11 Wrap for Residential/Commercial Water Heater 2.26

2.3.7 Low-Flow Shower Heads - Residential 2.27

2.4 BUILDING LIGHTING 2.31

2.5 FAN AND PUMP MOTORS IN SLC-4 BUILDINGS 2.57

2.6 SEWAGE LIFT STATION MOTORS 2.69

2.7 WATER WELL AND BOOSTER PUMP MOTORS 2.73

2.8 PACKAGED SEWAGE SYSTEM PUMP MOTORS 2.77

2.9 TRANSMISSION AND DISTRIBUTION 2.81

2.9.1 Transformer Energy Resource Opportunities 2.81

2.9.2 Conservation Voltage Reduction 2.94

2.10 TRANSPORTATION 2.95

3.0 CASE STUDY OF PROCESS LOADS AT SPACE LAUNCH COMPLEX-4 . . . . . 3.1

3.1 ENERGY CONSERVATION AT ACTIVE SLCs OTHER THAN SLC-4 . . . 3.4

3.2 FUEL AND OXIDIZER VAPOR MITIGATION SYSTEMS 3.4

3.2.1 Replace Hydrazine Incinerators with Bubble Cap Scrubbers 3.5

3.2.2 Replace Oxidizer Burner at SLC-4W with Oxidizer Scrubber 3.10

3.3 GASEOUS NITROGEN SYSTEMS 3.16

3.3.1 Improve Efficiency of Nitrogen Distribution System (Alone) 3.17

3.3.2 Install Electric Air Compressors for Electrical Equipment Purges and Pneumatic Tools at SLC-4E . . 3.23

3.3.3 Install Electric Air Compressors for Electrical Equipment Purges and Pneumatic Tools at SLC-4E, in Conjunction with Improving Distribution System Efficiency 3.27

3.4 CLEANROOM/CONDITIONED AIR SPACE EROS 3.30

3.4.1 Replace Steam Boilers in SLC-4E CE (Clean Enclosure) A/C System with Pneumatic Humidifiers . 3.30

3.4.2 Replace Steam Boilers in SLC-4E Payload A/C System with Pneumatic Humidifiers 3.35

3.4.3 Provide Dehumidifier Bypass in SLC-4E Payload A/C System 3.41

3.4.4 Provide Recirculation Path for SLC-4E Payload A/C Conditioned Air 3.44

4.0 ENERGY RESOURCE OPPORTUNITY IMPACT STUDY 4.1

4.1 LIFE-CYCLE COST EVALUATION METHOD 4.1

4.2 SUMMARY OF ERO IMPACT STUDY 4.3

5.0 REFERENCES 5.1

APPENDIX - SUMMARY OF ECONOMIC ANALYSIS CASE STUDY OF SOUTH VANDENBERG POWER PLANT OPERATING SCENARIOS A.1

FIGURES

2.1 Means Transformer Material Cost 2.84

2.2 Means Transformer Labor Cost 2.84

2.3 Weekly Load Duration Curve Used for Time-of-Loss Calculation 2.87

2.4 Load Loss Distribution Between Rate Periods 2.89

2.5 NPV for RI EROs 2.90

2.6 NPV for ROF EROs 2.91

2.7 Total Annual Energy Savings for ROF EROs With a Positive NPV 2.91

3.1. SLC-4 Gaseous Nitrogen Distribution System 3.18

3.2. SLC-4 Nitrogen Savings Diagrams 3.20

3.3. SLC-4E Clean Enclosure A/C System 3.32

3.4. SLC-4E Payload A/C System 3.37

TABLES

S.1 Total Savings, Cost, and NPV vi

S.2 Summary of the Cost-Effective Electric Resource at VAFB vii

S.3 Summary of Electric Energy and Demand Savings vii

S.4 Summary of the Cost-Effective Fossil Fuel Resource at VAFB viii

S.5 Summary of Fossil Fuel Energy and Demand Savings ix

S.6 Summary of the Cost-Effective Process Resource at SLC-4 ix

S.7 Summary of Process Energy and Demand Savings x

S.8 Summary of the Cost-Effective Resource by Fuel Type x

S.9 Summary of the Energy and Demand Savings by Fuel Type xi

S.10 Fuel Balance at VAFB xii

1.1 Master List of Energy Resource Opportunities at Vandenberg Air Force Base 1.4

2.1 Boiler and Furnace EROs 2.13

2.2 Building Envelope EROs 2.19

2.3 Service Hot Water EROs 2.28

2.4 Building Type Groups for Lighting ERO Analysis 2.32

2.5 Primary Lighting Hours of Operation Per Year and Percent on for Occupied Periods 2.34

2.6 Primary Lighting Hours of Operation Per Year and Percent on for Unoccupied Periods 2.35

2.7 Total First Cost of ERO Groups 2.38

2.8 First Year Energy and Demand Savings 2.39

2.9 Operations and Maintenance Savings 2.40

2.10 Lighting EROs for Administration Buildings 2.41

2.11 Lighting EROs for Barracks/Administration Buildings 2.42

2.12 Lighting EROs for Communication Buildings 2.43

2.13 Lighting EROs for Family Housing 2.44

2.14 Lighting EROs for Motor Pool Buildings 2.45

2.15 Lighting EROs for Production Buildings 2.46

2.16 Lighting EROs for R&D-1 Buildings 2.48

2.17 Lighting EROs for R&D-2 Buildings 2.49

2.18 Lighting EROs for Shop Buildings 2.50

2.19 Lighting EROs for Training Buildings 2.51

2.20 Lighting EROs for Warehouse Buildings 2.52

2.21 Motor EROs in Research (R&D Building Type) Building 715 . . . 2.60

2.22 Motor EROs in Plant Building 717 (PLT-BLD Building Type) . . . 2.61

2.23 Motor EROs in Storage Building 719 (STO Building Type) 2.62

2.24 Motor EROs in Communication Building 730 (COMCATN Building Type) 2.63

2.25 Motor EROs in Plant Building 734 (PLT-BLD Building Type) . . . 2.64

2.26 Motor EROs in Research Building 738 (R&D Building Type) . . . 2.65

2.27 Motor EROs in Warehouse Building 945 (WHS Building Type) . . . 2.66

2.28 Motor EROs in Warehouse Building 8401 (WHS Building Type) . . 2.67

2.29 Motor EROs in Sewage Lift Stations: Energy Efficient Motors . 2.71

2.30 Motor EROs in Water Wells and Booster Stations 2.75

2.31 Motor EROs in Packaged Sewage Systems 2.79

2.32 Large Transformer Hardware Cost 2.85

2.33 Pacific Gas and Electric Rate Schedule E-20: Electric Service to Customers with Maximum Demand of 1,000 kW or More, Effective January 1, 1992 . . . . . 2.86

2.34 Transformer ERO Options 2.90

2.35 VAFB Existing Transportation Outlook 2.99

2.36 VAFB Transportation Outlook Upon Conversion to Fueled Vehicles 2.102

3.1 Fuel and Oxidizer Vapor Mitigation Process EROs 3.9

3.2 Gaseous Nitrogen System Process EROs 3.29

3.3 Cleanroom/Conditioned Air Space Process EROs 3.47

4.1 Cost Elements in a Life-Cycle Cost Analysis 4.5

4.2 Assumptions Used in LCC Analysis 4.6

4.3 Description of Column Headings 4.7

4.4 LCC Results: All EROs 4.8

4.5 LCC Results: EROs Constituting the Minimum Life-Cycle Cost Efficiency Resource 4.23

4.6 Annualized LCC Results: EROs Constituting the Minimum Life-Cycle Cost Efficiency Resource 4.28

4.7 LCC Results: EROs Constituting the Minimum Life-Cycle Cost Efficiency Resource Aggregated by Fuel Type 4.33

4.8 LCC Results: EROs Constituting the Minimum Life-Cycle Cost Efficiency Resource Aggregated by ERO Category 4.34

4.9 Annualized LCC Results: EROs Constituting the Minimum Life-Cycle Cost Efficiency Resource Aggregated by Fuel Type . 4.35

4.10 Annualized LCC Results: EROs Constituting the Minimum Life-Cycle Cost Efficiency Resource Aggregated by ERO Category 4.36

4.11 Total Resource 4.37

1.0 SELECTION OF ENERGY RESOURCE OPPORTUNITIES

The number of conceivable energy conservation measures, fuel-switching opportunities, and renewable energy projects at a federal site is very large. A three-step process has been developed by PNL to make energy resource opportunity (ERO) selection, evaluation, and prioritization manageable. The steps are the following:

- Preliminary Screening. Select promising EROs from a master list, considering the site's mission, building stock, end-use equipment characteristics, utility characteristics, climate, energy costs, other local conditions that affect ERO viability, and recommendations from site staff.

- Cost and Performance Analysis. Establish, with a reasonable degree of accuracy, the technical and economic feasibility of each ERO that passed the preliminary screening. An analysis is performed comparing the operating and economic performance of the existing equipment and the ERO. Where applicable, impacts on energy security and the environment are included in the analysis.

- Life-Cycle Cost Analysis and Prioritization. Perform a life-cycle cost analysis and rank EROs by net present value (NPV), so that a package with the optimal return on investment can be defined. If any utility cost-sharing or rebate programs exist, they can be included within this evaluation step.

The life-cycle cost (LCC) analysis and prioritization step is required by federal law (CFR 436, Part 10). All federal agencies are required to evaluate the LCC of alternative technologies when making energy investments. An LCC evaluation computes the total long-run costs of alternative actions, and identifies the action that maximizes the NPV of the energy investment. Section 4.1 details the process by which LCCs are calculated, explains how these calculations are used in the identification of projects, and introduces a method for prioritizing a list of alternative actions.

The remainder of this section describes the process used for preliminary selection of EROs and presents a master list of screened and selected EROs. Section 2 covers the technical characteristics of each ERO considered and

analyzes its cost and performance. Section 3 is a case study of process loads at Space Launch Complex-4 (SLC-4). Section 4 provides the results of the LCC analysis and ERO prioritization process. The Appendix presents the summary of an economic analysis of operating alternatives at the South Vandenberg Power Plant (Daellenbach et al. 1993).

1.1 ERO PRELIMINARY SELECTION CRITERIA

The ERO selection process tests the applicability of a long list of EROs (see the master list of EROs in Table 1.1) using criteria that can be applied with relatively little "hard data." This step filters out EROs that are unlikely to be economically feasible and are unlikely to have significant, persistent energy impact at the site. The eight screening criteria used to characterize and select possible EROs are listed below.

- **Low Incidence.** EROs that apply to end use equipment representing a very small fraction of site energy use may be eliminated. However, such EROs may be retained in cases where the end-use is concentrated rather than diffuse, or where it has been previously identified in a detailed audit, and the ERO passes the other criteria without difficulty.

- **Economic Feasibility.** A preliminary assessment of economic feasibility can often be made if the utility will commit to an incentive or cost-sharing level in advance. Energy resource opportunities whose costs and performance are well established and fairly uniform across applications can then be screened with respect to the utility's marginal cost of energy and/or capacity.

- **Technical Feasibility.** In some cases, conditions at the site will preclude implementation of a certain ERO. Conditions that make retrofit difficult or use patterns that complicate operations or maintenance of the end-use equipment in question may result in elimination of an ERO prior to formal analysis.

- **Primarily Operations and Maintenance (O&M).** A measure that is little more than a no- or low-cost change in O&M activity will generally be rejected as inappropriate to the integrated resource acquisition program. The measures of interest to the program are capital intensive measures that are difficult, programmatically, for the site personnel to implement on their own. Cases where there is a significant cost to develop new O&M procedures or to procure special instruments and tools may be considered.

- **Mission-Critical.** End-use equipment that serves critical mission functions may not be accessible for retrofit or replacement, or its operation may be so important to critical mission objectives that any modification in the service is not tolerable.

- **Site Preference.** The site may have particular objections to certain EROs, based on O&M or other infrastructure support requirements, or based on unfavorable past experience with similar measures. In cases where the ERO appears to be very attractive in other respects, it may be analyzed in the belief that the savings might support a reevaluation of the measure.

- **Insufficient Data.** In some cases, the performance or operational characteristics of existing end-use equipment is unknown, and the cost to determine these characteristics cannot be justified. This is not a technical- or implementation-cost grounded rejection and should not deter the site energy and or contractor from further analysis and, if appropriate, implementation of the ERO concerned.

- **Complexity.** In some cases, the complexity of the analysis precludes the analysis of an ERO as part of a high-level, comprehensive site assessment program.

- **Immature Technology.** Some retrofits require equipment that has not achieved sufficient market acceptance or penetration in the federal sector to be considered reliable and effective. The persistence of savings and the sensitivity of savings to O&M, and the propensity for equipment to degrade in energy performance while continuing to provide service, are factors that could disqualify a technology. Such measures will usually not be considered.

- **Other ERO-Dependent Measures.** A measure may be rejected because it depends on one or more other EROs that have been rejected or whose feasibility is too uncertain. It may also be rejected because it has already been implemented in most or all of the existing end-use opportunities.

1.2 MASTER LIST OF SCREENED AND SELECTED EROs

A master list of generic conservation measures, aggregated from a variety of sources, was used as an origination point in the identification of energy resource opportunities at Vandenberg Air Force Base (VAFB). This master list is presented in Table 1.1. For each ERO listed there is an indication of whether or not it passed the preliminary screening process. If the ERO did not pass, a brief explanation is provided.

TABLE 1.1. Master List of Energy Resource Opportunities at Vandenberg Air Force Base

ERO Name	ERO Description	Passed Preliminary Screening (Y/N)	Comment
FANS AND FAN MOTORS			
Align sheaves	Align sheaves and shafts; replace belt with high-efficiency belt(s).	N	This is primarily an O&M measure
Reduce hours	Install clock, EMCS switch or other control means to reduce operating hours.	N	Intermittent application due to non-human critical loads in many facilities
Reduce speed	Reduce fan speed by adjusting sheave diameter and reduce motor size accordingly.	N	Insufficient data
Efficient motor	Replace existing motor with high-efficiency model and reduce size if appropriate.	Y	
Two-speed motor	Replace existing motor with two-speed motor and controller.	Y	
Variable inlet vane	Install variable inlet vanes and control to provide reduced air flow when appropriate.	N	Most fans are single zone
Variable-speed drive	Install variable frequency motor drive and control to modulate airflow; also reduce motor size if appropriate.	N	Most fans are single zone
Variable-speed electronically commutated motor	Replace existing motor with variable-speed electronically commutated permanent magnet motor and control; also reduce motor size if appropriate.	N	Most fans are single zone
CO_2 sensor	Install CO_2 sensors for ventilation control reduce heating of outside air and average (over time) air volume moved by fans.	N	Intermittent application due to non-human critical loads in many facilities
Duct transitions	Redesign duct transitions to reduce friction loss by using turning vanes, long radius turns and gradual changes in cross-sectional area.	N	No high SP systems; insufficient data on low SP systems
Duct cross-section	Increase duct cross-section to reduce friction loss.	N	No high SP systems; insufficient data on low SP systems
Face velocity	Redesign filters, coils, etc., to reduce friction loss by operating at lower face velocities.	N	No high SP systems; insufficient data on low SP systems

TABLE 1.1. (contd)

ERO Name	ERO Description	Passed Preliminary Screening (Y/N)	Comment
PUMPS AND PUMP MOTORS			
Align shafts	Align shafts and replace coupling with high-efficiency coupling.	N	This is primarily an O&M measure
Reduce hours	Install clock, EMCS switch or other control means to reduce operating hours.	N	Most pumps operate on demand
Efficient motor	Replace motor with high-efficiency model.	Y	
Trim impeller	Replace (or trim) impeller and reduce motor size to match actual load.	N	Insufficient data
Two-speed motor	Replace existing motor with two-speed motor and controller.	Y	
Variable-speed drive	Install variable frequency motor drive and control to modulate fluid flow; also reduce motor size if appropriate.	N	Use alternate ERO - two speed motor
Variable-speed, electronically commutated motor	Replace existing motor with variable-speed electronically commutated permanent magnet (VS ECM) motor and control; also reduce motor size if appropriate.	N	Use alternate ERO - two speed motor
Adjust VSD setpoint	Adjust VSD control setpoint for lower speed operation.	N	
Pipe transitions	Redesign system with long radius elbows and other low-loss type fittings to reduce friction loss.	N	Insufficient data
Pipe size	Redesign system with increased pipe diameter to reduce friction loss.	N	Insufficient data
Fittings	Redesign filters, heat exchangers, valves, etc., to reduce friction loss by operating at lower velocity.	N	Insufficient data
REFRIGERATION (residential/barracks)			
Efficient refrigerator	Replace existing refrigerator with high-efficiency model meeting DOE 1993 Appliance Efficiency Standard.	N	Insufficient resource
AIR-CONDITIONING (window or package units)			
Efficient air-conditioner	Replace window or package air-conditioner with high-efficiency model.	N	VAFB cooling load is insignificant
Reduce A/C hours	Install clock, EMCS switch or other control means to reduce operating hours and peak coincident load of air-conditioner.	N	VAFB cooling load is insignificant

TABLE 1.1. (contd)

ERO Name	ERO Description	Passed Preliminary Screening (Y/N)	Comment
LIFT STATION heating/ventilation			
Thermostat	Replace on/off control of electric resistance heater control with thermostatic control.	N	Not applicable
Ventilation heat recovery	Install air-to-air heat exchanger to preheat ventilation air by recovering sensible and latent heat from exhaust.	N	Immature technology
Methane sensor control	Provide methane sensor to operate ventilation fan only when needed to prevent excess methane concentrations.	N	Immature technology
Insulate walls	Install moisture-resistant insulation to above-grade walls and roof (consider this ERO only after thermostat and ventilation heat recovery or methane sensor).	N	Must be preceded by ventilation control ERO
RESIDENTIAL LIGHTING (interior and exterior)			
Upgrade incandescent to permanent compact fluorescent (PCF) fixture	Upgrade incandescent fixture to permanent compact fluorescent fixture.	N	Use alternative ERO - replace incandescent with PCF fixture
Replace incandescent with PCF fixture	Replace incandescent fixture with new compact fluorescent fixture.	Y	
Upgrade fluorescent to T8	Upgrade fluorescent to high-efficiency T8 or similar system.	N	Insufficient resource
Replace fluorescent with new fixture	Replace fluorescent fixture with new high-efficiency T8 (or comparable) fixture.	N	Insufficient resource
COMMERCIAL LIGHTING			
Upgrade fluorescent to T8	Upgrade fluorescent fixture to high-efficiency T8 or similar system.	Y	
Replace fluorescent with new fixture	Replace fluorescent fixture with new high-efficiency T8 (or comparable) fixture.	Y	
De-lamp	Replace, modify or move/remove fixtures to reduce lighting density to level that provides correct illumination.	N	Few overlit areas at VAFB
Upgrade incandescent to PCF fixture	Upgrade incandescent fixture to permanent compact fluorescent fixture.	N	Use alternative ERO - replace incandescent with PCF fixture
Replace incandescent with PCF fixture	Replace incandescent fixture with new compact fluorescent fixture.	Y	

TABLE 1.1. (contd)

ERO Name	ERO Description	Passed Preliminary Screening (Y/N)	Comment
Upgrade mercury to high-pressure sodium (HPS)	Replace mercury vapor lamps and ballasts with high-pressure sodium lamp and ballast (or replace entire fixture).	Y	
Upgrade incandescent exit signs	Upgrade incandescent exit signs with light emitting diode (LED) or fluorescent exit signs.	N	More cost-effective to replace whole unit
Replace incandescent exit signs	Replace incandescent exit signs with LED or fluorescent exit signs.	Y	
Occupancy sensors	Install occupancy sensors to control lights.	N	Few permanent applications
Time clocks or photocells	Install time clocks or photocells to control lights.	N	Few lighted areas not in use or not otherwise controlled
EMCS control	Install EMCS or add field panel and necessary relays to control lights via EMCS system.	N	Local control preferred
EXTERIOR LIGHTING			
De-lamp	Remove or disconnect bulbs or ballasts to reduce lighting density to level that provides reduced but satisfactory illumination.	N	Few overlit areas at VAFB
Zoned security lamp circuits	Rewire building exterior light circuits into zones so that night work lights and security lights are under separate control.	N	No application
Motion detectors	Install motion detectors in series with security light time clock switch so that selected zones are off except when activated by motion detectors.	N	No application
Reprogram time clocks	Reprogram existing time clock to turn off or reduce light level at low traffic hours.	N	Primarily and operation and maintenance (O&M) measure
Install time clocks	Install programmable time clock to turn off or reduce light level at low traffic hours.	N	Clock already in place or otherwise controlled
Zoned streetlamp circuits	Rewire streetlight circuits into zones and provide programmable time clock to turn off or reduce light level at low traffic hours.	N	No application
Mercury to HPS	Replace mercury vapor lamps and ballasts with high-pressure sodium lamp and ballast (or replace entire fixture).	N	Most streetlighting is already HPS and VAFB does not have an overlighting problem

TABLE 1.1. (contd)

ERO Name	ERO Description	Passed Preliminary Screening (Y/N)	Comment
Incandescent to HP sodium	Replace incandescent fixture with high-pressure sodium fixture.	N	Most streetlighting is already HPS and VAFB does not have an overlighting problem
OCCUPANCY-BASED CONTROLS (see also FAN, HVAC)			
Occupancy sensor, restroom	Install occupancy sensor to control lights and exhaust fan in restroom.	N	Insufficient resource
Occupancy sensor, other	Install occupancy sensor to control lights in hallway, lunchroom, office, conference room, or other intermittently occupied area.	N	Insufficient data
Daylight sensor	Install daylight sensor to control lights in hall, foyer, or other area that has windows and low ambient light requirement.	N	Areas too small
Daylight sensor, security	Install daylight sensor to control security light(s) in area that has windows.	N	Insufficient resource
Night setback	Install time clock to schedule fan, thermostat set point, and air-conditioner operation.	N	Not applicable
CO_2 sensor control	Install CO_2 sensor to control air-handler and ventilation fans.	N	Not applicable
Countdown timer	Install countdown timer to control air-handler and ventilation fans during normally unoccupied hours.	N	Not applicable
Occupied mode via EMCS	Implement unoccupied schedules for fans and air-conditioning via EMCS; override during normally unoccupied hours.	N	Not applicable
ELECTRIC DEMAND CONTROL			
Water heater control	Install controls to shed electric water heater loads in rotating blocks during peak demand periods.	N	Insufficient resource
Shed A/C loads	Install controls to shed air-conditioning loads in rotating blocks during peak demand periods.	N	VAFB cooling load is insignificant
Well pump control	Transfer lift station and well pumps to emergency generators during peak.	N	Insufficient data
Run motors at low speed	Install controls to operate existing variable speed pumps and fans at low speed during peak demand periods.	N	Insufficient data

TABLE 1.1. (contd)

ERO Name	ERO Description	Passed Preliminary Screening (Y/N)	Comment
Peak shave generator loads	Install controls to automatically transfer existing diesel generator loads to generator power during peak demand periods.	N	Not applicable except with South Vandenberg Power Plant (SVPP)
Feed grid from generators	Install controls and switches to feed existing generator output to grid; operate during high demand periods to reduce peak demand.	N	Not applicable except with South Vandenberg Power Plant (SVPP)
SERVICE HOT WATER			
New Conventional Gas Water Heater (76%, 80%, 85% efficient)	Replace existing gas water heater with a new conventional gas water heater model.	Y	Family housing units only
High Efficiency Gas Water Heater (94% efficient)	Replace existing gas water heater with high-efficiency (well-insulated) model.	Y	Residential and commercial units
Tank insulation with R-11 wrap	Add insulating blanket to provide additional tank insulation.	Y	Family housing units only
Tankless heater	Replace tank type water heaters with instant/tankless unit.	N	Not cost-effective
Low-flow shower heads	Low-flow shower head restricts the volume of water passing through.	Y	Family housing units only
Lower hot water temperature	Reduced water temperature reduces energy lost in various hot water-consuming processes including showers, dishwashers, laundries, etc.	N	This is primarily an O&M ERO; user can have set-point changed if desired
Insulate service hot water pipes	Typically, service hot water pipes are copper. Insulation is usually 1/2-inch glass fiber, and the temperature of the water is usually 140 °F. ASHRAE standard 90 A covers the insulation requirements on service hot water pipes.	N	Already insulated according to VAFB sources
Fuel switch to electric	Fuel switch from thermal distribution loop to electric water heater.	N	No thermal distribution loop at VAFB
Fuel switch from electric	Install boiler to switch from electric to natural gas water heating.	N	Insufficient resource
A/C desuperheater	Recover heat from air-conditioner by installing water-cooled desuperheater and controls.	N	Insufficient resource
Refrigeration desuperheater	Recover heat from refrigerators by installing water-cooled desuperheater and controls.	N	Insufficient resource

TABLE 1.1. (contd)

ERO Name	ERO Description	Passed Preliminary Screening (Y/N)	Comment
TRANSMISSION & DISTRIBUTION			
Phase balance	Improve phase balance of feeders and main transformers by moving loads among phases.	N	Phase balance is satisfactory
Efficient transformers	Replace transformers with high-efficiency models.	Y	
Reduce transformer size	Reduce transformer size to match load, thus reducing standby loss and reactive power consumption; at VAFB, most transformers service non mission-critical loads.	N	Insufficient data
Conservation voltage reduction	Reduce set point on auto-tap-changing transformer to maintain minimum acceptable voltage at end of feeder.	Y	
Passive power factor correction	Install capacitor banks to provide passive power factor correction.	N	Reconsider after lighting & motor retrofits
Switched power factor correction	Install capacitor banks, power factor transducers and automatic switches to provide active power factor correction.	N	Reconsider after lighting & motor retrofits
RESIDENTIAL HVAC			
Whole house fan	Install whole house fans to reduce or eliminate the use of window air-conditioning.	N	VAFB cooling load is insignificant
Efficient furnace motor	Replace furnace fan motor with high-efficiency motor.	N	Insufficient data
2-speed furnace motor	Replace furnace fan motor with 2-speed motor.	N	Insufficient data
Ventilation heat recovery	Install air-to-air heat exchanger to reduce infiltration and recover heat from ventilation air.	N	Insufficient data
Efficient air-conditioner	Replace air-conditioner with high-efficiency unit.	N	VAFB cooling load is insignificant
Efficient heat pump	Replace heat pump with high-efficiency unit.	N	Insufficient resource
Heat pump	Replace electric resistance heat with heat pump.	N	Insufficient resource
Fuel switch from electric	Switch from electric heat to natural gas by installing fuel burning furnace or I.C. engine-driven heat pump.	N	Insufficient resource

TABLE 1.1. (contd)

ERO Name	ERO Description	Passed Preliminary Screening (Y/N)	Comment
RESIDENTIAL APPLIANCES			
Efficient washer	Replace clothes washer with high-efficiency (water miser) unit.	N	Tenant-owned
Efficient dryer	Replace clothes dryer with high-efficiency unit.	N	Tenant-owned
Efficient dishwasher	Replace dishwasher with high-efficiency (water miser) dishwasher.	N	Immature technology
Microwave oven	Provide microwave oven to reduce use of convection oven.	N	Insufficient data on cooking end use
FREEZE PROTECTION BY HEAT TAPE			
Thermostat	Provide thermostatic control (especially water storage tanks) of resistance heaters to eliminate continuous operation.	N	Not applicable; VAFB cooling load is insignificant
Insulate	Add insulation to pipes and tanks that have thermostatically controlled resistance heaters.	N	Not applicable
BOILERS			
Preheat combustion air	A gas-to-air heat exchanger, or a heat pipe, used for transferring heat of exhaust gases to the primary combustion air.	N	Cost-effective for boilers >60 MBtu/hr capacity; insufficient resource
Feedwater economizer	A gas-to-water heat exchanger consisting of feedwater tubes located in the path of the exhaust stream. Economizer can also be employed to heat domestic hot water, space heating water, or process hot water.	Y	Cost-effective for boilers >3 MBtu/hr capacity
Provide Maintenance of economizers	Both gas side and water side deposits can reduce the effectiveness of the heat transfer surfaces. Periodic cleaning of the economizer will assist in maintaining high heat recovery efficiencies.	N	Too few boilers currently have economizers; insufficient resource.
Air atomizing burner	Proper atomization of fuel oil is critical to ensure complete combustion with minimum excess air. Air-atomizing burners use steam or air for atomization, minimizing excess air and unburnt combustibles, and improving boiler efficiency.	N	Fuel oil already being phased-out where possible; insufficient resource
Low Excess Air Burners for Oil Burners	Burners provide optimal fuel spray and air flow patterns to achieve both complete combustion and a stable flame	N	Fuel oil already being phased-out where possible; insufficient resource

TABLE 1.1. (contd)

ERO Name	ERO Description	Passed Preliminary Screening (Y/N)	Comment
Boiler tune-up	An annual tune-up is simple, can be generally accomplished within a day, and basically involves adjusting fuel-air ratios at optimal levels at various load conditions.	Y	Considered at all boiler capacities
Flue gas analyzer	A combination of flue gas analyzers and regular tuning can assist in maintaining optimal boiler efficiency. A typical analyzer will monitor O_2, CO_2, CO, and exhaust temperature.	N	Cost-effective for boilers >10 MBtu/hr capacity; insufficient resource.
Barometric damper	Installing an automatic damper will reduce the standby loss in a boiler or a furnace. When the burner is off, the damper closes to minimize heat loss through the stack.	N	Only cost-effective for boilers that cycle diurnally
Automatic electric damper	Installing an automatic damper will reduce the standby loss in a boiler. When the burner is off, the damper closes to minimize heat loss through the stack.	Y	More expensive initial cost but preferred over the barometric damper because of additional reliability; considered at all boiler capacities
Outside/supply air temperature reset controller	Install controller to reset the steam or hot water supply temperature based on a predetermined schedule. Operating at lower temperature reduces heat (and leaking steam) losses.	N	Already installed
New conventional boiler	When the retrofit cost of an existing boiler is uneconomical, boiler replacement may be considered.	Y	Considered for boilers >1 MBtu/hr capacity
Pulse-condensing boiler	Pulse or condensing boilers have an instantaneous efficiency of over 90% and a seasonal efficiency that is 8% points higher than conventional units.	Y	Considered for boilers <1 MBtu/hr capacity
Fire-tube turbulators	Turbulators improve overall combustion efficiency in fire-tube boilers. Efficiency increases due to better heat transfer and lower stack temperature.	N	Not generally cost-effective; insufficient resource
Continuous boiler blowdown system with heat recovery	Continuous boiler blowdown has the potential to reduce blowdown losses through control of blowdown rate.	Y	Considered for boilers >6 MBtu/hr capacity

TABLE 1.1. (contd)

ERO Name	ERO Description	Passed Preliminary Screening (Y/N)	Comment
Fuel switch from propane to natural gas	Switch boiler fuel from propane use to natural gas	N	Not cost-effective to switch-out existing propane to natural gas because of cost-prohibitive capital investment that would be required to bring in natural gas trunk and feeder lines to areas with minimal propane use
Fuel switch from fuel oil to natural gas	Switch boiler fuel from oil use to natural gas	N	Fuel oil already being phased-out where possible; insufficient resource
BOILER AUXILIARIES & CENTRAL DISTRIBUTION SYSTEMS			
Periodic inspection of steam traps	Steam traps need to be inspected at least once a year. The inspection program would 1) identify the types, location and number of various steam traps, 2) maintain some spare parts and spare traps of each kind, and 3) repair and replace traps on a routine basis.	N	Not applicable-no central distribution system at VAFB
Pipe insulation	Insulation could be applied to all hot and cold pipes which are either uninsulated, or whose insulation is deteriorated and is currently ineffective.	N	Not applicable-no central distribution system at VAFB
Heating of fuel oil	Depending on the viscosity of fuel oil at ambient temperature, oil may need to be heated.	N	Fuel oil already being phased-out at VAFB; insufficient resource
Insulate hot fuel-oil pipes	Lines leading the fuel oil from the heater to the burner may be insulated to (i) minimize energy loss, and (ii) ensure that the oil viscosity is maintained within acceptable limits at the burner.	N	Fuel oil already being phased-out at Base; insufficient resource
Repair leaking HTHW or steam lines	Leaking HTHW or steam lines are a major source of energy loss. The leak rate in lb/h is a function of the steam (HTHW) pressure and diameter and shape of the orifice through which it leaks.	N	Not applicable-no central distribution system at VAFB
Heat recovery heat exchanger	Various forms of waste heat can be recovered through appropriately sized heat exchanger systems.	N	Not applicable

TABLE 1.1. (contd)

ERO Name	ERO Description	Passed Preliminary Screening (Y/N)	Comment
Insulate condensate storage tanks	Tanks need to be insulated to prevent heat loss. Since condensate tank temperatures can be as high as 180 °F, proper insulation is critical for minimizing heat loss.	N	Not applicable
VSD feedwater pump	Install variable-speed drive to feedwater pump controlled by steam drum water level.	N	Insufficient resource
VSD combustion fan	Install variable-speed drives for combustion air and stack fans controlled by firing rate and static pressure at firebox.	N	Insufficient resource
Check valves	Repair leaking condensate return check valves.	N	Insufficient resource
CHILLERS			
Repair check valves	Repair leaking check valves in lead-lag pumps.	N	Light cooling loads; insufficient resource
Condenser water reset	Add controls to reset condenser water temperature on outdoor temperature.	N	Light cooling loads; insufficient resource
Chilled water reset	Add controls to reset chilled water temperature on chiller load.	N	Light cooling loads; insufficient resource
Parallel compressors	Add smaller, efficient compressor to obtain efficient operation under light-to-moderate load.	N	Light cooling loads; insufficient resource
Efficient chiller	Replace chiller with high-efficiency unit.	N	Light cooling loads; insufficient resource
PACKAGE HVAC (including split units)			
Expansion valve control	Install improved expansion valve control; Replace capillary tube if necessary.	N	Light cooling loads; insufficient resource
Improve liquid return	Replace liquid return with larger line or install pump ("liquid pressure amplification").	N	Not applicable
Parallel compressors	Add smaller, efficient compressor to obtain efficient operation under light-to-moderate load.	N	Light cooling loads; insufficient resource
Efficient new unit	Replace package or split unit with high-efficiency unit.	N	Light cooling loads; insufficient resource
Precooling/reheating heat pipe for latent load	Install heat pipe to reduce coil load while maintaining latent capacity by precooling mixed air and reheating supply air.	N	Light cooling loads; insufficient resource

TABLE 1.1. (contd)

ERO Name	ERO Description	Passed Preliminary Screening (Y/N)	Comment
SWIMMING POOLS			
Direct fired make-up air	Install direct-fired make-up air heater in air-supported pool enclosures.	N	No application at site
Heat pump dehumidification	Install dehumidifying heat pump to reduce ventilation load of enclosed pool.	N	Insufficient data
ENVELOPE			
Insulate attic ceilings in Family Housing units only	Batt-type fiberglass insulation and blown-in fiberglass or cellulose are most frequently used as ceiling insulation.	Y	Blown-in fiberglass to increase insulation level from R-8 to R-27
Insulate walls in Family Housing units only	Insulate with rigid, non-rigid, poured-in, or blown-in insulation. For a wood frame wall or a cavity wall, remove top strip of siding or drill holes in sheathing or inside gyp-board and completely fill each stud space with blown-in insulation.	Y	Blow-in fiberglass to increase insulation level from R-11 to R-19.5
Insulate slab-on-grade perimeter	To insulate the slab, it will be necessary to dig around the building up to the depth of the frost line or the footing, whichever is shallower.	N	Not applicable; no frost line
Insulate floor above crawl space	Fiberglass batt or blanket insulation is ideally suited for insulating floors above crawl spaces. Typically, the insulation is hung using a wire mesh, nails, and staples. Vapor barrier is installed against the floor surface prior to installation of the insulation.	N	Not applicable
Storm windows/doors and multi-glazed windows	Storm windows create a "dead-air" space for insulation and also reduce infiltration. Multi-glazed windows replace existing windows.	N	Most windows at the VAFB are either double-glazed or already have storm windows
Movable Window Insulation	Install insulated roller-shade with edge seals in all large windows.	N	Not applicable
Tinted/reflective window film or screen	Window tinting or micro-louver screens can be applied to an existing window to reduce solar heat gain.	N	Not applicable
Insulate supply and return ducts	Add fiberglass insulation to supply and return ducts.	N	Not applicable
Weatherstripping	Install weatherstripping to door and window perimeters to provide a tight seal limiting or eliminating infiltration.	Y	Family Housing units only

TABLE 1.1. (contd)

ERO Name	ERO Description	Passed Preliminary Screening (Y/N)	Comment
Caulking	A bead of caulk could be applied to seams in building structures where air can infiltrate.	Y	Family Housing units only
SPACE HEATING			
New conventional furnace (76% efficient)	Replacement is cost effective if existing furnaces are old and inefficient.	Y	Family Housing units only
Pulse-condensing furnace (93% efficient)	Replacement is cost effective if existing furnaces are old and inefficient.	Y	Family Housing units only
Infrared heaters	Provide spot or space heating by overhead infrared heating system to provide comfort with lower air temperature and corresponding lower envelope conduction and infiltration loss; also reduces energy used to power fans and pumps.	N	Not applicable
Space unit heaters	Replace old space heater with a new space heater.	N	Not applicable
Electric baseboard heaters	Baseboard unit provides more uniform heating due to placement at base of exterior walls where heat loss occurs.	N	Not applicable
Install programmable thermostat with setback controls	Electronic thermostats provide the means to set back temperature when the space is unoccupied or a greater deviation from normal set point temperature can be tolerated	N	Insufficient data
Fuel switch from propane to natural gas	Switch space heating fuel use from propane to natural gas	N	Insufficient data; propane is typically used in areas far from natural gas lines
Fuel switch from electric to natural gas	Switch space heating fuel use from electricity to natural gas	N	Insufficient resource
PROCESS: Fuel and Oxidizer Vapor Mitigation Systems			
Bubble cap scrubbers	Replace hydrazine incinerators at SLC-4 with bubble cap scrubbers	Y	
Oxidizer scrubber	Replace oxidizer burner at SLC-4W with oxidizer scrubber	Y	Although this measure is not cost-effective from a life cycle cost basis, it was evaluated at the request of the Aerospace Corporation

TABLE 1.1. (contd)

ERO Name	ERO Description	Passed Preliminary Screening (Y/N)	Comment
Corona discharge	Install a corona discharge system for fuel vapor mitigation (SLC-4)	N	Immature technology
Solar detoxification	Install a solar detoxification system for fuel vapor mitigation (SLC-4)	N	Immature technology
PROCESS: Gaseous Nitrogen Systems			
Nitrogen gas air compressors	Install natural gas air compressors to replace nitrogen usage for air tools and electrical equipment purges (SLC-4)	N	Site preference - cost of fossil fuel emissions would offset energy cost advantage
Extension of Linde Plant service	Extend a nitrogen line from the Linde Plant to SLC-3	N	Site preference - previous problems with extraction combination
Linde Plant nitrogen extraction	Recommend that Linde Plant use nitrogen extraction process rather than purchasing liquid nitrogen	N	Site preference - previous problems with extraction contamination
Intrinsic safety barriers	Use intrinsic safety barriers (where possible) to eliminate instrumentation enclosure purges (SLC-4)	N	Insufficient data
Nitrogen distribution efficiency	Improve efficiency of nitrogen distribution system at SLC-4	Y	
Electric air compressors	Install electric air compressors for electric equipment purges and pneumatic tools at SLC-4E	Y	
Nitrogen distribution efficiency with electric air compressors	Install electric air compressors for electrical equipment purges and pneumatic tools at SLC-4E, in conjunction with improving distribution efficiency	Y	
PROCESS: Vehicle Cleanroom/Conditioned Air Spaces			
Desiccant dehumidifier	Install desiccant dehumidifier system in 946 (X-ray) building	N	Insufficient data
Axial flow fans	Retrofit the existing centrifugal fans in the SLC-4E Clean Enclosure A/C system with axial flow fans	N	Insufficient data
Low pressure-drop HEPA filters	Install low pressure-drop HEPA filters in SLC-4E Clean Enclosure A/C and Payload A/C systems	N	Inadequate resources
Pneumatic humidifiers for Clean Enclosure A/C	Replace Steam Boilers in SLC-4E Clean Enclosure A/C with Pneumatic Humidifiers	Y	

TABLE 1.1. (contd)

ERO Name	ERO Description	Passed Preliminary Screening (Y/N)	Comment
Pneumatic humidifiers for Payload A/C	Replace Steam Boilers in SLC-4E Payload A/C Systems with Pneumatic Humidifiers	Y	
Dehumidifier bypass	Provide Dehumidifier Bypass in SLC-4E Payload A/C System	Y	
Recirculation air path	Provide Recirculation Path for SLC-4E Payload A/C Conditioned Air	Y	
TRANSPORTATION			
Conversion of fleet vehicles to compressed natural gas (CNG)	Replacement of gas and diesel Air Force and GSA (General Services Administration) fleet with CNG models to reduce fuel costs and emissions	Y	

2.0 ENERGY RESOURCE OPPORTUNITY EVALUATIONS

The results of the analysis of energy resource opportunities (EROs) are presented within 10 common energy end-use categories. Boilers and furnaces are analyzed in Section 2.1, building envelope in Section 2.2, service hot water in Section 2.3, building lighting in Section 2.4, fan and pump motors in SLC-4 buildings in Section 2.5, sewage lift station motors in Section 2.6, water well and booster pump motors in Section 2.7, packaged sewage system pump motors in Section 2.8, transmission and distribution in Section 2.9, and transportation in Section 2.10. A narrative description of each ERO is provided, including information on the initial cost, energy and dollar savings, impacts on operations and maintenance and, when applicable, a discussion of energy supply and demand, energy security, and environmental issues. A brief description of the evaluation methodologies and technical and cost assumptions is also included.

At the end of each section, a summary table presents the operational performance of energy end-use equipment before and after the implementation of each ERO. The summary tables also provide the results of the life-cycle cost (LCC) analysis, including net present value (NPV) and value index (VI) of each ERO. The NPV is defined as the difference between the life-cycle cost of the existing technology and that of the proposed alternative. The VI is defined as the NPV divided by the present value (PV) of the installed cost. As a first-cut selection criteria, EROs with positive NPVs are selected for further consideration while EROs with negative NPVs are discarded. Because the NPV of the option of doing nothing to the existing equipment is zero, for the installation of new or retrofit equipment to be economically attractive, their NPV would have to be greater than zero. The VI is used to prioritize EROs and is only applied to projects deemed cost-effective by nature of their positive NPV. EROs with negative NPVs, therefore, will not have an associated VI measurement.

Individual EROs were evaluated as mutually exclusive measures. This approach allows individual EROs to be ranked or rated based on parameters such as installed cost, NPV, energy savings, and changes in operations and maintenance (O&M) requirements. In addition, this evaluation approach permits

direct economic comparison of competing EROs (e.g., new conventional furnace versus high efficiency, pulse-condensing furnace). Between EROs that are not mutually exclusive (such as retrofitting an existing boiler with a feedwater economizer or installing a new conventional boiler), the ERO with the higher positive NPV will be considered further while the ERO with the lower NPV will no longer be considered.

The 1992 discount rate of 4.6 percent (NIST 1992) was used in this analysis. This rate is a reflection of the discount rate for U.S. Treasury Bonds and varies slightly from year-to-year. The relative ranking of EROs with positive NPVs (see Table 4.5) should not be affected to a large extent from this variable discount rate. For consistency in this analysis, installed costs are in 1992 dollars (1992$) and the fuel escalation rates are determined with the appropriate 1992 index by fuel type (NIST 1992).

Replacement or retrofit of existing technologies were evaluated on a replace-immediately (RI) or a replace-on-failure (ROF) basis or both depending on the average approximate age of the existing equipment, the remaining useful life of the existing equipment, and the life expectancy of new equipment. All EROs can be evaluated on an RI basis. EROs that analyze equipment with remaining useful lives greater than the life expectancy of new equipment can only be evaluated on an RI basis because the existing equipment would not be expected to fail during the 25-year analysis period (as mandated by 10 CFR Part 436, which requires all federal energy decisions to use LCC analysis methodology). If, however, the existing equipment is expected to fail during the 25-year analysis period, the EROs associated with this equipment can be evaluated on an ROF basis. In addition, existing equipment with an average approximate age greater than the life expectancy of new equipment are assumed in this analysis to have zero remaining useful life left.

The maintenance cost given for new or retrofit EROs is the incremental cost difference between the cost of maintaining the existing equipment and that of maintaining new or retrofitted equipment. Because the maintenance cost of new or retrofitted equipment is often the same as the cost to maintain the existing equipment, this incremental maintenance cost is often zero.

The identification (ID) code found in tables throughout this report delineates EROs within a given category (such as space heating or lighting) with identifiers such as capacity, fuel type, and fixture type. This code supplies information necessary to understand the various levels from which this analysis was carried out.

Electricity demand savings were included in this analysis for the following ERO equipment types were relevant: lighting, fans, pumps, motors, process equipment, and transmission and distribution (T&D). Essentially, if EROs with these equipment types contributed to peak demand reduction (as measured in reduced peak kW load), then demand savings were included in the economic analysis.

2.1 BOILERS AND FURNACES

This section covers those EROs that pertain to replacing existing boilers and furnaces with new conventional and high efficiency pulse-condensing units as well as retrofits to existing boilers using feedwater economizers, tuneups, automatic electric dampers, and continuous boiler blowdown.

Feedwater economizers are evaluated in Section 2.1.1, boiler tuneups are evaluated in Section 2.1.2, automatic electric dampers are evaluated in Section 2.1.3, new conventional boilers are evaluated in Section 2.1.4, new pulse-condensing boilers are evaluated in Section 2.1.5, continuous boiler blowdown systems are evaluated in Section 2.1.6, new conventional furnaces are evaluated in Section 2.1.7, and new high-efficiency furnaces are evaluated in 2.1.8.

An inventory list of natural gas and propane boilers containing capacity, location, and fuel type was provided by VAFB personnel early in this project. This inventory, along with site visits by PNL staff to examine equipment first-hand and discussions with VAFB personnel, helped identify the necessary information needed for this analysis. Nearly 200 natural gas and propane boilers with greater than 1 MBtu/hr capacity were identified at VAFB for replacement or retrofit. These boilers have an average approximate age of 15 years and a remaining life of 25 years. While some fuel oil boilers still

exist, they are few in number and are already being phased-out wherever possible because of the stringent emissions standards regulating use of this fuel.

All EROs associated with this section have similar or identical impacts in the area of energy or operations security and implications for environmental impact. There would be essentially no change in security issues compared with the existing situation. In addition, these EROs will result in reduced air pollution associated with reduced fuel consumption. Quantifying the economic benefits resulting from these environmental improvements is, however, beyond the scope of this study.

2.1.1 Feedwater Economizers

Description

With this retrofit, a gas-to-water heat exchanger consisting of feedwater tubes is installed in the path of the exhaust stream to convert flue gas waste heat to higher temperature feedwater. Flue gas temperatures are not cooled below 325°F to minimize corrosion due to flue particulate condensation. Efficiencies increase 0.08 percent per degree increase in feedwater temperature. This ERO is only typically considered for boilers with capacities greater than 3 MBtu/hr.

Assumptions

Technical assumptions are as follows:

- Given the age and maintenance condition of VAFB boilers greater than 3 MBtu/hr, the installation of feedwater economizers would result in a 100°F drop in stack temperature which correlates with a 30°F rise in feedwater temperature and an overall efficiency improvement in the boiler of approximately 2.5 percent.
- Twenty natural gas boilers with an average capacity of 5.0 MBtu/hr and two propane boilers with an average capacity of 8.2 MBtu/hr were identified for retrofit.
- At boiler capacities of 5.0 MBtu/hr and 8.2 MBtu/hr the equipment and labor installation cost is $6,231 and $9,697 per boiler, respectively.

Results

The complete quantitative results of this ERO appear in Table 2.1. The table contains specific energy, cost, and economic performance data. This ERO affects a total of 22 boilers with capacities greater than 3 MBtu/hr.

Budget Implications. The estimated initial cost of the measure is $124,616 for the natural gas boilers and $19,393 for the propane boilers.

Energy and Cost Savings. It is estimated that this ERO will result in an annual energy savings of 2,293 MBtu at a net present value (NPV) of $134,606 for natural gas boilers and annual energy savings of 736 MBtu at a NPV of $22,527 for propane boilers.

Operation and Maintenance. The impact of this ERO on maintenance requirement is considered to be negligible.

2.1.2 Boiler Tune-up

Description

An annual boiler tune-up will include mechanical adjustments to controls (linkage, control elements, controller), refractory repair, and cleaning or replacing of burner tips. Once the mechanical adjustments are complete, the operating conditions can be adjusted to increase efficiency. This ERO is typically considered for boilers of all sizes.

Assumptions

Technical assumptions follow:

- The extent of efficiency improvement by tuning a boiler is based in part on the period of time since the previous boiler tune-up. Personnel at VAFB indicated that they were not sure when the last boiler tune-ups occurred and, therefore, the assumption was made that the last complete tune-up occurred somewhere between 2 and 10 years ago. This ERO should be applied annually and will result in an average annual efficiency improvement of 1 percent given the age, capacity, and average time from last complete tuneup. Larger efficiency improvements will be possible in the initial years with degradation of impact on efficiency over time.

- 148 natural gas boilers with an average capacity of 1.4 MBtu/hr and 20 propane boilers with an average capacity of 1.6 MBtu/hr were identified for tune-up.

- The reported annual maintenance cost of a boiler tune-up varies between $100/boiler and $500/boiler for units with capacities in the size range identified at VAFB. With average VAFB boiler capacities of 1.5 MBtu/hr, the annual maintenance and labor cost is approximately $250 per boiler.

Results

The complete quantitative results of this ERO appear in Table 2.1. The table contains specific energy, cost, and economic performance data. This ERO affects a total of 168 boilers with average capacities of approximately 1.5 MBtu/hr.

Budget Implications. The estimated annual maintenance cost is for this measure is $37,000 for the natural gas boilers and $5,000 for the propane boilers.

Energy and Cost Savings. It is estimated that this ERO will result in an annual energy savings of 1,651 MBtu at a NPV of ($347,959) for natural gas boilers and annual energy savings of 293 MBtu at a NPV of ($43,658) for propane boilers. Values in parentheses indicate negative values. As these results indicate, annual boiler tune-up is not cost-effective at VAFB. While not specifically analyzed, tuning up boilers on a non-annual maintenance schedule might be a more cost-effective course of action.

Operation and Maintenance. While VAFB operation and maintenance personnel have the training and tools necessary to tune-up boilers, some work might have to be subcontracted because of limitations in the number of staff available.

2.1.3 Automatic Electric Dampers

Description

Installing an automatic electric damper will reduce standby loss in a boiler. When the burner is off, the damper closes to minimize heat loss through the stack. This ERO is typically considered for boilers of all capacities.

Assumptions

Technical assumptions follow:

- Given the age, size, and maintenance condition of VAFB boilers, the overall efficiency improvement that could be expected is approximately 2.9 percent.

- According to VAFB personnel, 148 natural gas boilers with an average capacity of 1.4 MBtu/hr and 20 propane boilers with an average capacity of 1.6 MBtu/hr were identified for retrofit with automatic electric dampers.

- At boiler capacities of approximately 1.5 MBtu/hr the equipment and labor installation cost is $150 per boiler.

Results

The complete quantitative results of this ERO appear in Table 2.1. The table contains specific energy, cost, and economic performance data. This ERO affects a total of 168 boilers with average capacities of approximately 1.5 MBtu/hr.

Budget Implications. The estimated initial cost for this measure is $22,090 for the natural gas boilers and $3,112 for the propane boilers.

Energy and Cost Savings. It is estimated that this ERO will result in an annual energy savings of 5,454 MBtu at a NPV of $542,113 for natural gas boilers and annual energy savings of 837 MBtu at a NPV of $82,489 for propane boilers.

Operation and Maintenance. The impact of this ERO on maintenance requirement is considered to be negligible.

2.1.4 New Conventional Boilers

Description

When the retrofit cost of an existing boiler is uneconomical, boiler replacement may be considered. The new boilers considered in this ERO use conventional technology. With the capacity specified below, the new boilers have an overall efficiency of approximately 88 percent. This ERO is typically only considered for boilers with capacities greater than 1 MBtu/hr.

Assumptions

Technical assumptions follow:

- Given the age, size, and maintenance condition of VAFB boilers, the overall efficiency improvement that could be expected is approximately 5.6 percent.
- According to VAFB personnel, 60 natural gas boilers with an average capacity of 2.9 MBtu/hr and 7 propane boilers with an average capacity of 3.7 MBtu/hr were identified for replacement with new conventional boilers.
- At boiler capacities of 2.9 MBtu/hr and 3.7 MBtu/hr the equipment and labor installation cost is $17,636 and $20,643 per boiler, respectively.

Results

The complete quantitative results of this ERO appear in Table 2.1. The table contains specific energy, cost, and economic performance data. This ERO affects a total of 67 boilers with average capacities greater than 1 MBtu/hr.

Budget Implications. The estimated initial cost for this measure is $1,058,185 for the natural gas boilers and $144,502 for the propane boilers.

Energy and Cost Savings. It is estimated that this ERO will result in an annual energy savings of 8,937 MBtu and a net present value (NPV) of $61,501 for natural gas boilers and annual energy savings of 1,331 MBtu at a NPV of $18,288 for propane boilers.

Operation and Maintenance. The impact of this ERO on maintenance is considered to be negligible.

2.1.5 New Pulse-Condensing Boilers

Description

When the retrofit cost of an existing boiler is uneconomical, boiler replacement may be considered. The new boilers considered in this ERO use pulse and condensing technologies. Pulse combustion burns the fuel-air mixture in an oscillatory manner which significantly increases convective heat transfer. By condensing flue gas, more energy is extracted from the combustion process and applied to heating the water or steam media used for space heating. Both technologies increase overall efficiencies over conventional technologies. With the capacity specified below, the new boilers have an

overall efficiency of approximately 95 percent. This ERO is only typically considered for boilers with capacities less than 1 MBtu/hr.

Assumptions

Technical assumptions follow:

- Given the age, size, and maintenance condition of VAFB boilers, the overall efficiency improvement that could be expected is approximately 8 percent.
- According to VAFB personnel, 88 natural gas boilers with an average capacity of 0.4 MBtu/hr and 13 propane boilers with an average capacity of 0.4 MBtu/hr were identified for replacement with new pulse-condensing boilers.
- At boiler capacities of 0.4 MBtu/hr the equipment and labor installation cost is $8,438 per boiler, respectively.

Results

The complete quantitative results of this ERO appear in Table 2.1. The table contains specific energy, cost, and economic performance data. This ERO affects a total of 101 boilers with average capacities 0.4 MBtu/hr.

Budget Implications. The estimated initial cost for this measure is $742,523 for the natural gas boilers and $109,691 for the propane boilers.

Energy and Cost Savings. It is estimated that this ERO will result in an annual energy savings of 2,582 MBtu an a NPV of ($335,524) for natural gas boilers and annual energy savings of 381 MBtu at a NPV of ($49,965) for propane boilers.

Operation and Maintenance. The impact of this ERO on maintenance requirement is considered to be negligible.

2.1.6 Continuous Boiler Blowdown

Description

Continuous boiler blowdown has the potential to reduce blowdown losses through control of blowdown rate and involves retrofitting the boiler with control equipment. This ERO is only typically considered for boilers of greater than 6 MBtu/hr capacity.

Assumptions

Technical assumptions follow:

- Given the age, size, and maintenance condition of VAFB boilers, the overall efficiency improvement that could be expected is approximately 2 percent.
- According to VAFB personnel, 5 natural gas boilers with an average capacity of 8.3 MBtu/hr and 2 propane boilers with an average capacity of 8.2 MBtu/hr were identified for retrofit with continuous boiler blowdown systems.
- At boiler capacities of 8.3 MBtu/hr and 8.2 MBtu/hr the equipment and labor installation cost is $7,980 and $7,920 per boiler, respectively.

Results

The complete quantitative results of this ERO appear in Table 2.1. The table contains specific energy, cost, and economic performance data. This ERO affects a total of 7 boilers with average capacities greater than 6 MBtu/hr.

Budget Implications. The estimated initial cost for this measure is $39,900 for the natural gas boilers and $15,840 for the propane boilers.

Energy and Cost Savings. It is estimated that this ERO will result in an annual energy savings of 762 MBtu at a NPV of $45,880 for natural gas boilers and annual energy savings of 301 MBtu at a NPV of $17,758 for propane boilers.

Operation and Maintenance. The impact of this ERO on maintenance requirement is considered to be negligible.

2.1.7 New Conventional Furnaces

Description

When retrofit costs of an existing furnace is not economical, furnace replacement may be considered. The new furnaces analyzed in this ERO use conventional technology and have an overall efficiency of 76 percent. Generally, this ERO is considered economical for furnaces with capacities between 0.01 and 0.20 MBtu/hr. The 1,913 natural gas furnaces with capacities of approximately 0.05 MBtu/hr capacity were identified at VAFB for replacement in

family housing units. The existing furnaces have an average approximate age of 10 years and a remaining useful life of 10 years.

Assumptions

Technical assumptions follow:

- Given the age, size, and maintenance condition of VAFB furnaces in the family housing area, the overall efficiency improvement that could be expected is approximately 14 percent.
- In family housing, 1,913 furnaces with capacities of approximately 0.05 MBtu/hr were considered for replacement with new conventional furnaces with overall thermal efficiencies of 76 percent.
- At furnace capacities of 0.05 MBtu/hr the equipment and labor installation cost is $592 per furnace.

Results

The complete quantitative results of this ERO appear in Table 2.1. The table contains specific energy, cost, and economic performance data. This ERO affects a total of 1,913 furnaces with an average capacity of 0.05 MBtu/hr.

Budget Implications. The estimated initial cost for this measure is $1,133,037 for the natural gas furnaces.

Energy and Cost Savings. It is estimated that this ERO will result in an annual energy savings of 9,708 MBtu and a NPV of ($246,578) for the natural gas furnaces.

Operation and Maintenance. The impact of this ERO on maintenance requirement is considered to be negligible.

2.1.8 New Pulse-Condensing Furnaces

Description

When retrofit costs of an existing furnace is not economical, furnace replacement may be considered. The new furnaces analyzed in this ERO use pulse and condensing technologies and have an overall efficiency of 93 percent. Generally, this ERO is considered economical for boilers with capacities between 0.01 and 0.20 MBtu/hr. The 1,913 natural gas furnaces with capacities of approximately 0.05 MBtu/hr capacity were identified at VAFB for

replacement in family housing units. The existing furnaces have an average approximate age of 10 years and a remaining useful life of 10 years.

Assumptions

Technical assumptions follow:

- Given the age, size, and maintenance condition of VAFB furnaces ing the family housing area, the overall efficiency improvement that could be expected is approximately 31 percent.
- In family housing, 1,913 furnaces with capacities of approximately 0.05 MBtu/hr were considered for replacement with new pulse-condensing furnaces with overall thermal efficiencies of 93 percent.
- At furnace capacities of 0.05 MBtu/hr the equipment and labor installation cost is $1,640 per furnace.

Results

The complete quantitative results of this ERO appear in Table 2.1. The table contains specific energy, cost, and economic performance data. This ERO affects a total of 1,913 furnaces with an average capacity of 0.05 MBtu/hr.

Budget Implications. The estimated initial cost for this measure is $3,136,635 for the natural gas furnaces.

Energy and Cost Savings. It is estimated that this ERO will result in an annual energy savings of 21,497 MBtu and a NPV of ($929,294) for the natural gas furnaces.

Operation and Maintenance. The impact of this ERO on maintenance requirement is considered to be negligible.

TABLE 2.1. Boiler and Furnace EROs

Existing Boiler and Furnace Operating Parameters

Existing Equipment							Existing Costs	
Equipment Type by Boiler Capacity	Ave. Age (years)	Fuel Type	Est. Oper. Eff. (%)	# of units	Ave. Size (MBtu/hr)	Present Energy Use (MBtu/yr)	Energy ($/yr)	Maint. ($/yr)
Boilers >3MBtu/hr	15	NG	81	20	5.0	91,717	511,649	0
Boilers >3MBtu/hr	15	P	80	2	8.2	15,402	98,958	0
Boilers; all sizes	15	NG	81	148	1.4	190,038	1,060,137	0
Boilers; all sizes	15	P	81	20	1.6	29,350	193,089	0
Boilers >1MBtu/hr	15	NG	81	60	2.9	159,588	890,270	0
Boilers >1MBtu/hr	15	P	81	7	3.7	23,755	153,281	0
Boilers <1MBtu/hr	15	NG	81	88	0.4	32,284	180,101	0
Boilers <1MBtu/hr	15	P	81	13	0.4	4,769	31,377	0
Boilers >6MBtu/hr	15	NG	80	5	8.3	38,063	212,334	0
Boilers >6MBtu/hr	15	P	80	2	8.2	15,042	98,958	0
Furnaces	10	NG	62	1913	0.05	69,344	386,839	0

NG Natural Gas
P Propane

Boiler and Furnace ERO Operating Parameters After EROs Applied

							Post-ERO Costs	
ID	ERO Description	Approx. Age (years)	Fuel Type	Est. Oper. Eff. (%)	# of Units	Ave. Size (MBtu/hr)	Post-ERO Energy Use (MBtu/yr)	Energy ($/yr)	Maint. ($/yr)
1a	Economizer >3MBtu/hr	0	NG	84	20	5.0	89,424	498,858	0
1b	Economizer >3MBtu/hr	0	P	83	2	8.2	14,666	96,484	0
2a	Tuneup; all sizes	0	NG	85	148	1.4	183,138	1,049,538	543,040
2b	Tuneup; all sizes	0	P	85	20	1.6	29,057	191,164	73,384
3a	Dampers; all sizes	0	NG	84	148	1.4	184,584	1,029,711	0
3b	Dampers; all sizes	0	P	84	20	1.6	28,513	187,586	0
4a	New Boiler >1MBtu/hr	0	NG	87	60	2.9	150,651	840,415	0
4b	New Boiler >1MBtu/hr	0	P	87	7	3.7	22,424	147,529	0
5a	Pulse Boiler <1MBtu/hr	0	NG	89	88	0.4	29,702	165,692	0
5b	Pulse Boiler <1MBtu/hr	0	P	89	13	0.4	4,388	28,867	0
6a	Blowdown >6MBtu/hr	0	NG	82	5	8.3	37,301	208,088	0
6b	Blowdown >6MBtu/hr	0	P	82	2	8.2	14,741	96,979	0
7a	New Furnace	0	NG	76	1913	0.05	59,636	332,682	0
8a	Pulse Furnace	0	NG	93	1913	0.05	47,847	266,919	0

TABLE 2.1. (contd)

Boiler and Furnace ERO Economic Parameters After EROs Applied

ID	ERO Description	Installed Cost (1992$)	Fuel Type	Life (yr)	Energy Savings (MBtu/yr)	Energy Savings ($/yr)	O&M Savings ($/yr)	Life-Cycle Cost NPV (1992$)	Life-Cycle Cost Value Index
1a	Economizer >3MBtu/hr	124,616	NG	40	2,293	12,791	0	134,606	1.08
1b	Economizer >3MBtu/hr	19,393	P	40	736	2,474	0	22,527	1.07
2a	Tuneup; all sizes	0	NG	1	1,651	10,599	(543,040)	(347,959)	(a)
2b	Tuneup; all sizes	0	P	1	293	1,925	(73,384)	(43,658)	(a)
3a	Dampers; all sizes	22,090	NG	40	5,454	30,426	0	542,113	24.54
3b	Dampers; all sizes	3,112	P	40	837	5,503	0	82,489	25.27
4a	New Boiler >1MBtu/hr	1,058,185	NG	40	8,937	49,855	0	61,501	0.06
4b	New Boiler >1MBtu/hr	144,502	P	40	1,331	8,752	0	18,288	0.08
5a	Pulse Boiler <1MBtu/hr	742,523	NG	40	2,582	14,409	0	(335,524)	NA
5b	Pulse Boiler <1MBtu/hr	109,691	P	40	381	2,510	0	(49,465)	NA
6a	Blowdown >6MBtu/hr	39,900	NG	40	762	4,246	0	45,880	1.15
6b	Blowdown >6MBtu/hr	15,840	P	40	301	1,979	0	17,758	1.03
7a	New Furnace	1,133,037	NG	20	9,708	54,157	0	(246,578)	NA
8a	Pulse Furnace	3,136,635	NG	20	21,497	119,920	0	(929,294)	NA

(a) This option has no installed cost, therefore, no value index can be calculated.
NA: Not Applicable - the VI is not relevant for EROs with negative NPVs.

2.2 BUILDING ENVELOPE

This section covers those EROs that pertain to the building envelope, including attic ceiling and wall insulation as well as a weatherization package which includes both weatherstripping and caulking. Through discussions with VAFB personnel and inspection of various building types by PNL personnel during site visits, it was determined that the family housing building type had by far the most inadequate level of insulation and level of weatherization. This fact, which coincides with the relatively inexpensive insulation methods for the stick-frame construction, narrowed the scope of the analysis to this building type. The other building types were found, on the average, to have adequate levels of insulation, including barracks that were scheduled for demolition. Attic insulation was analyzed in Section 2.2.1, wall insulation in Section 2.2.2, and a weatherization package including caulking and weatherstripping was included in Section 2.2.3.

The 1,913 family housing units were constructed an average of 32 years ago. Their stick-frame construction with open attic spaces allows relatively easy access for blow-in insulation to be applied to both the attic and walls. The effectiveness of adding insulation to the attic and ceiling as well as weatherizing the family housing units is evaluated in this section. Annual heating degree day (HDD) at VAFB are 3,451°F-day/yr; base 65°F and average monthly temperatures for VAFB were used as a basis for heat loss calculations (AFM 88-29, 1978; SERI, 1990).

All EROs associated with this section have similar or identical impacts in the area of energy or operations security, operations and maintenance, and implications for environmental impact. There would be essentially no change in security issues and operations and maintenance compared with the existing situation. In addition, these EROs will result in reduced air pollution associated with reduced fuel consumption. Quantifying the economic benefits resulting from these environmental improvements is, however, beyond the scope of this study.

2.2.1 Insulate Attic Ceilings

Description

Both blow-in or batt-type fiberglass insulation can be applied to the open attic spaces. This ERO would increase the insulation level from the average estimated level of R-8 to R-27 for all 1,913 family housing units.

Assumptions

Technical and cost assumptions follow:

- The average family housing unit has 1,450 ft^2 of attic area that could be affected by increased levels of insulation.
- Six inches of blow-in fiberglass (R-19) will be added to the existing R-8 insulation level at an installed cost including material and labor of $0.52/$ft^2$. For the age and type of structure found in family housing units, this incremental level of improved insulation is generally considered to appropriate and cost-effective. This results in a total installed cost of $754/family housing unit.

Results

The complete quantitative results of this ERO appear in Table 2.2. The table contains specific energy, cost, and economic performance data. This ERO will affect 1,913 family housing units with an approximate square footage of 2,773,000 ft^2 of attic ceiling area.

Budget Implications. The estimated initial cost for this measure is $1,442,402.

Energy and Cost Savings. It is estimated that this ERO will result in an annual energy savings of 14,530 MBtu at a NPV of $324,992.

2.2.2 Insulate Walls

Description

While rigid, non-rigid, and poured-in insulation types are possible retrofit insulation methods with stick-frame walls, blown-in insulation is generally considered the most cost-effective. Typically, the strip covering the cavity between the outer and inner walls is removed or a plug is temporarily taken out of the siding to allow the blow-in fiberglass insulation to fill

each space between studs. This ERO would increase the insulation of the wall from an average estimated level of R-11 to R-19.5 for all 1,913 family housing units.

Assumptions

Technical assumptions follow:

- The average family housing unit has approximately 1,220 ft^2 of wall area that could be affected by increased levels of insulation.
- Four inches of blow-in fiberglass (R-8.5) will be added to the existing R-11 insulation level of the wall at an installed cost including material and labor of $1.23/$ft^2$. For the age and type of structure found in family housing units, this incremental level of improved insulation is generally considered to appropriate and cost-effective. This results in a total installed cost of approximately $1,500/family housing unit.

Results

The complete quantitative results of this ERO appear in Table 2.2. The table contains specific energy, cost, and economic performance data. This ERO will affect 1,913 family housing units with an approximate square footage of approximately 2,334,000 ft^2 of wall area.

Budget Implications. The estimated initial cost for this measure is $2,867,174.

Energy and Cost Savings. It is estimated that this ERO will result in an annual energy savings of 14,530 MBtu at an NPV of ($1,533,693).

2.2.3 Weatherization Package-Caulking/Weatherstripping

Description

Weatherstripping material is installed around door and window perimeters to provide a tight seal to limit or eliminate infiltration. In addition, a bead of caulk can be applied to seams the building structures where air can infiltrate. By reducing the infiltration of cold air into the heated space within the structure, these weatherization techniques will reduce heating requirements and increase occupant comfort. This ERO analyzed the weatherization package as applied to all 1,913 housing units.

Assumptions

Technical assumptions follow:

- The average family housing unit has approximately 11,600 ft^3 of heated space that can be affected by infiltration.
- Energy experts estimate that up to 25 percent of volume of heated air within a structure can be displaced each hour in poorly weatherized buildings. At VAFB, a conservative displacement rate of 10 percent was used in the calculations. Total installed cost including labor and materials was $41/family housing unit.

Results

The complete quantitative results of this ERO appear in Table 2.2. The table contains specific energy, cost, and economic performance data. This ERO will affect 1,913 family housing units with an approximate total volume of 22,191,000 ft^3.

Budget Implications. The estimated initial cost for this measure is $78,433.

Energy and Cost Savings. It is estimated that this ERO will result in an annual energy savings of 3,308 MBtu at an NPV of $261,207.

TABLE 2.2. Building Envelope EROs

Existing Building Envelope Parameters

Existing Equipment						Existing Costs	
ERO Type	Ave. Age (yrs)	Fuel Type	R-Value	# of Units	Present Energy Use (MBtu/yr)	Energy ($/yr)	Maint. ($/yr)
Insulation in Attic	32	NG	8	1,913	69,344	386,839	0
Insulation in Walls	32	NG	11	1,913	69,344	386,839	0
Weatherization	32	NG	NA	1,913	69,344	386,839	0

Building Envelope Parameters After ERO Applied

							Post-ERO Costs	
ID	ERO Description	Ave. Age (yrs)	Fuel Type	R-Value	# of Units	Post-ERO Energy Use (MBtu/yr)	Energy ($/yr)	Maint. ($/yr)
1a	Attic Insulation	0	NG	27	1,913	54,814	305,783	0
2a	Insulate Walls	0	NG	19.5	1,913	61,690	344,141	0
3a	Weatherization Pkg.	0	NG	NA	1,913	66,036	368,385	0

Building Envelope Parameters After ERO Applied

								Life-Cycle Cost	
ID	ERO Description	Installed Cost (1992$)	Fuel Type	Life (yr)	Energy Savings (MBtu/yr)	Energy Savings ($/yr)	O&M Savings ($/yr)	NPV (1992$)	Value Index
1a	Attic Insulation	1,442,402	NG	40	21,497	81,056	0	324,922	0.23
2a	Insulate Walls	2,867,174	NG	40	7,654	42,698	0	(1,533,693)	NA
2a	Weatheriz. Pkg.	78,433	NG	40	3,308	18,454	0	261,207	3.33

Notes:

NG: Natural Gas.
NA: Not Applicable - the VI is not relevant for EROs with negative NPVs.

2.3 SERVICE HOT WATER

This section covers those EROs that pertain to replacing existing water heaters with new water heaters at various efficiency levels, wrapping water heaters with additional insulation to reduce standby losses, and installing low-flow shower heads to reduce hot water consumption. New water heaters and insulative tank wraps were considered in both residential (1,913 family housing, HSG-FAM, buildings) buildings and in commercial buildings showing high service hot water (SHW) use (73 administration, ADMIN, and 136 research and development, R/D, buildings). Because low-flow shower heads were generally located only in the showers of family housing units, this ERO considered retrofit possibilities only in the HSG-FAM building type.

Water heaters with several levels of efficiency are designed to meet the SHW load found in residential buildings. These buildings require relatively small water heaters with low gallons per hour recovery factors. In the 1,913 family housing units, new, natural gas 50 gallon water heaters were analyzed at 76, 80, 85, and 94 percent efficiency levels. The 94 percent efficient water heater uses pulse-condensing technology while the others use combinations of conventional technologies. Commercial buildings require larger water heaters (this analysis assumed 100 gallon capacities) with higher gallons per hour recovery factors. Through a combination of conversations with VAFB personnel and PNL inspections it was determined that approximately one large, high-recovery-rate, natural gas 100 gallon water heater would be adequate for each average-sized ADMIN and R/D building. All natural gas-fired water heaters considered have an average approximate age of 5 years and a remaining useful life of 5 years.

All EROs associated with this section have similar or identical impacts in the area of energy or operations security and implications for environmental impact. There would be essentially no change in security issues and operations and maintenance compared with the existing situation. In addition, these EROs will result in reduced air pollution associated with reduced fuel consumption. Quantifying the economic benefits resulting from these environmental improvements is, however, beyond the scope of this study.

2.3.1 New 76 Percent Efficient Residential Water Heater

Description

This ERO involves replacing the existing gas water heater with a new 76 percent efficient conventional gas water heater model. These models have 50 gallon capacities and relatively low gallons per hour recovery factors. They were analyzed for replacement of the current water heaters located in the 1,913 family housing buildings.

Assumptions

Technical assumptions follow:

- Given the age, size, and fuel use of the SHW units currently in place in family housing, their current efficiency is 75 percent. The overall efficiency improvement that could be expected, therefore, is 1 percent.
- Residential water heaters with 50 gallon capacity, low gallons per hour recovery factor, and 76 percent efficiency cost $270 for equipment and installation labor each.

Results

The complete quantitative results of this ERO appear in Table 2.3. The table contains specific energy, cost, and economic performance data. This ERO affects a total of 1,913 water heaters at 50 gallon capacity.

Budget Implications. The estimated initial cost for this measure is $516,510 for the 76 percent efficient natural gas water heaters.

Energy and Cost Savings. It is estimated that this ERO will result in an annual energy savings of 557 MBtu and an NPV of ($273,374) for the 76 percent efficient natural gas water heaters.

2.3.2 New 80 Percent Efficient Residential Water Heater

Description

This ERO involves replacing the existing gas water heater with a new 80 percent efficient conventional gas water heater model. These models have 5 gallon capacities and relatively low gallons per hour recovery factors.

They were analyzed for replacement of the current water heaters located in the 1,913 family housing buildings.

Assumptions

Technical assumptions follow:

- Given the age, size, and fuel use of the SHW units currently in place in family housing, their current efficiency is 75 percent. The overall efficiency improvement that could be expected, therefore, is 5 percent.
- Residential water heaters with 50 gallon capacity, low gallons per hour recovery factor, and 80 percent efficiency cost $349 for equipment and installation labor each.

Results

The complete quantitative results of this ERO appear in Table 2.3. The table contains specific energy, cost, and economic performance data. This ERO affects a total of 1,913 water heaters at 50 gallon capacity.

Budget Implications. The estimated initial cost for this measure is $667,637 for the 80 percent efficient natural gas water heaters.

Energy and Cost Savings. It is estimated that this ERO will result in an annual energy savings of 2,787 MBtu and an NPV of ($302,217) for the 80 percent efficient natural gas water heaters.

2.3.3 New 85 Percent Efficient Residential Water Heater

Description

This ERO involves replacing the existing gas water heater with a new 85 percent efficient conventional gas water heater model. These models have 50 gallon capacities and relatively low gallons per hour recovery factors. They were analyzed for replacement of the current water heaters located in the 1,913 family housing buildings.

Assumptions

Technical assumptions follow:

- Given the age, size, and fuel use of the SHW units currently in place in family housing, their current efficiency is 75 percent.

The overall efficiency improvement that could be expected, therefore, is 10 percent.

- Residential water heaters with 50 gallon capacity, low gallons per hour recovery factor, and 85 percent efficiency cost $368 for equipment and installation labor each.

Results

The complete quantitative results of this ERO appear in Table 2.3. The table contains specific energy, cost, and economic performance data. This ERO affects a total of 1,913 water heaters at 50 gallon capacity.

Budget Implications. The estimated initial cost for this measure is $703,984 for the 85 percent efficient natural gas water heaters.

Energy and Cost Savings. It is estimated that this ERO will result in an annual energy savings of 5,574 MBtu and an NPV of ($253,448) for the 85 percent efficient natural gas water heaters.

2.3.4 New 94 Percent Efficient Residential Water Heater

Description

This ERO involves replacing the existing gas water heater with a new 94 percent efficient pulse-condensing gas water heater model. These models have 50 gallon capacities and relatively low gallons per hour recovery factors. They were analyzed for replacement of the current water heaters located in the 1,913 family housing buildings.

Assumptions

Technical assumptions follow:

- Given the age, size, and fuel use of the SHW units currently in place in family housing, their current efficiency is 75 percent. The overall efficiency improvement that could be expected, therefore, is 19 percent.

- Residential water heaters with 50 gallon capacity, low gallons per hour recovery factor, and 80 percent efficiency cost $1,200 for equipment and installation labor each.

Results

The complete quantitative results of this ERO appear in Table 2.3. The table contains specific energy, cost, and economic performance data. This ERO affects a total of 1,913 water heaters at 50 gallon capacity.

Budget Implications. The estimated initial cost for this measure is $2,295,600 for the 94 percent efficient natural gas water heaters.

Energy and Cost Savings. It is estimated that this ERO will result in an annual energy savings of 10,592 MBtu and an NPV of ($1,014,198) for the 94 percent efficient natural gas water heaters.

2.3.5 New 80 Percent Efficient Commercial Water Heater

Description

This ERO involves replacing the existing gas water heater with a new 80 percent efficient conventional gas water heater model. These models have 100 gallon capacities and high gallons per hour recovery factors. They were analyzed for replacement of the current water heaters located in the 73 ADMIN and 136 R/D buildings.

Assumptions

Technical assumptions follow:

- Given the age, size, and fuel use of the SHW units currently in place in these commercial buildings, their current efficiency is 76 percent. The overall efficiency improvement that could be expected, therefore, is 4 percent.
- Commercial water heaters with 100 gallon capacity, high gallons per hour recovery factor, and 80 percent efficiency cost $1,553 for equipment and installation labor each.

Results

The complete quantitative results of this ERO appear in Table 2.3. The table contains specific energy, cost, and economic performance data. This ERO affects a total of 209 water heaters at 100 gallon capacity.

Budget Implications. The estimated initial cost for this measure is $324,577 for the 80 percent efficient natural gas water heaters.

Energy and Cost Savings. It is estimated that this ERO will result in an annual energy savings of 4,108 MBtu and an NPV of ($78,805) for the 80 percent efficient natural gas water heaters.

2.3.6 Tank Insulation with R-11 Wrap for Residential/Commercial Water Heaters

Description

This ERO involves adding an insulation blanket to the water heater to reduce standby losses. This ERO was analyzed for retrofit of the 50 gallon water heaters located 1,913 family housing units and of the 100 gallon water heaters located in the 209 ADMIN and R/D buildings. Replace-on-failure options considered insulating a newly installed tank upon failure of the existing tank.

Assumptions

Technical assumptions follow:

- The residential 50 gallon water heaters have a surface area of 38.4 ft^2 and the commercial 100 gallon water heaters have a surface area of 44.2 ft^2 available for a retrofit R-11 insulation wrap.
- At an installation and labor cost of $1.64/$ft^2$, the residential 50 gallon water heater wrapping cost is $63 each and the commercial 100 gallon water heater wrapping cost is $72 each.
- From heat transfer calculations, 2.54 MBtu/yr can be saved by installing an R-11 insulation wrap on the 50 gallon residential water heaters and 2.92 MBtu/yr can be saved by installing an R-11 insulation wrap on the 100 gallon commercial water heaters.

Results

The complete quantitative results of this ERO appear in Table 2.3. The table contains specific energy, cost, and economic performance data. This ERO affects a total of 1,913 residential and 209 commercial water heaters.

Budget Implications. The estimated initial cost for this measure is $120,499 for the R-11 insulative wrap applied to the 50 gallon residential water heaters and $15,156 for the R-11 insulative wrap applied to the 100 gallon commercial water heaters.

Energy and Cost Savings. It is estimated that this ERO will result in an annual energy savings of 4,859 MBtu and an NPV of $224,328 for the 50 gallon residential water heaters and an annual energy savings of 611 MBtu and a NPV of $28,204 for the 100 gallon commercial water heaters.

2.3.7 Low-Flow Shower Heads-Residential

Description

This ERO involves adding a low-flow shower head to the shower to reduce hot water consumption by restricting the volume of water passing through while maintaining adequate water pressure. Through consultation with VAFB personnel and PNL site inspection, it was determined that the 1,913 family housing units (with an average of one shower head each available for replacement) would be the most appropriate area for consideration of this retrofit.

Assumptions

Technical assumptions follow:

- With flow savings of 1.5 gpm of 110°F heated water with the typical hot water consumption of a family housing unit, approximately 1.5 MBtu/yr can be saved.
- The cost of each low-flow shower head unit is $20.

Results

The complete quantitative results of this ERO appear in Table 2.3. The table contains specific energy, cost, and economic performance data. This ERO affects a total of 1,913 residential family housing units.

Budget Implications. The estimated initial cost for this measure is $38,260 for the installation of 1,913 low-flow shower heads.

Energy and Cost Savings. It is estimated that this ERO will result in an annual energy savings of 2,869 MBtu and an NPV of $222,702.

TABLE 2.3. Service Hot Water EROs

Existing Service Hot Water Operating Parameters

Existing Equipment							Existing Costs	
Equipment Type	Ave. Age (years)	Fuel Type	Est. Oper. Eff. (%)	# of units	Ave. Capacity (gallons)	Present Energy Use (MBtu/yr)	Energy ($/yr)	Maint. ($/yr)
HSG-FAM Water Heat.	5	NG	75	1,913	50	55,745	310,397	0
ADMIN, R/D Water Heat.	5	NG	76	290	100	102,692	571,804	0

Existing Service Hot Water Operating Parameters After EROs Applied

									Post-ERO Costs	
ID	ERO Description	Approx Age (yrs)	RI or ROF	Fuel Type	Est. Oper. Eff. (%)	# of Units	Ave. Cap. (gal)	Post-ERO Energy Use (MBtu/yr)	Energy ($/yr)	Maint. ($/yr)
1a	New 76% Res. WH	0	RI	NG	76	1,913	50	55,188	307,293	0
2a	New 80% Res. WH	0	RI	NG	80	1,913	50	52,958	294,887	0
3a	New 85% Res. WH	0	RI	NG	85	1,913	50	50,171	279,357	0
4a	New 94% Res. WH	0	RI	NG	94	1,913	50	45,153	251,421	0
5a	New 80% Com. WH	0	RI	NG	80	209	100	98,584	548,932	0
6a	R-11 Wrap-Res.	0	RI	NG	NA	1,913	50	50,886	283,341	0
6b	R-11 Wrap-Res.	0	ROF	NG	NA	1,913	50	50,886	283,341	0
7a	R-11 Wrap-Com.	0	RI	NG	NA	209	100	102,081	568,402	0
7b	R-11 Wrap-Com.	0	ROF	NG	NA	209	100	102,081	568,402	0
8a	LFSH-Res.	0	RI	NG	NA	1,913	50	52,876	294,421	0

Notes:

HSG-FAM: Housing Family building type
ADMIN: Administration building type
R/D: Research and Development building type
WH: water heater
NG: natural gas
Res.: Residential
Com.: Commercial
LFSH: low-flow shower head
RI: replace-immediately
ROF: replace-on-failure
NA: not applicable

TABLE 2.3. (contd)

Service Hot Water Economic Parameters After EROs Applied

ID	ERO Description	Installed Cost (1992$)	RI or ROF	Fuel Type	Life (yr)	Energy Savings (MBtu/yr)	Energy Savings ($/yr)	O&M Savings ($/yr)	Life-Cycle Cost NPV (1992$)	Life-Cycle Cost Value Index
1a	New 76% Res. WH	516,510	RI	NG	10	557	3,104	0	(273,347)	NA
2a	New 80% Res. WH	667,637	RI	NG	10	2,787	15,510	0	(302,217)	NA
3a	New 85% Res. WH	703,987	RI	NG	10	5,574	31,040	0	(253,448)	NA
4a	New 94% Res. WH	2,295,600	RI	NG	10	10,592	58,976	0	(1,014,198)	NA
5a	New 80% Com. WH	324,577	RI	NG	10	4,108	22,872	0	(78,805)	NA
6a	R-11 Wrap-Res.	120,499	RI	NG	10	4,859	27,056	0	219,844	1.82
6b	R-11 Wrap-Res.	120,499	ROF	NG	10	4,859	27,056	0	224,328	2.44
7a	R-11 Wrap-Com.	15,156	RI	NG	10	611	3,402	0	27,636	1.82
7b	R-11 Wrap-Com.	15,156	ROF	NG	10	611	3,402	0	28,204	2.44
8a	LFSH-Res.	38,260	RI	NG	25	2,869	15,976	0	222,702	5.82

Notes:

NA: Not Applicable - the VI is not relevant for EROs with negative NPVs

2.4 BUILDING LIGHTING

Description

Over 21 percent of the electrical energy supplied to VAFB is used for lighting in and around buildings as determined in Volume 2: Baseline Detail (Halverson et al. 1993). Few, if any, of the existing lamps, ballasts, and light fixtures are as efficient as currently available cost-effective lamps, ballasts, and fixtures. A number of fixture retrofit and fixture replacement EROs are therefore evaluated in this section.

Eleven groups of EROs based on building types for building interior and some exterior lighting are discussed in this section. Street lighting and most exterior building and lot lighting is either already energy efficient by using mostly high pressure sodium lamps or is in the process of being replaced with energy efficient lighting as part of ongoing VAFB projects.

This set of EROs consists of replacing or retrofitting a majority of the fluorescent, incandescent, and mercury vapor fixtures in most of the buildings at VAFB. In some cases the existing fixture can be modified to accept the new tubes, ballast, and reflector. In other cases, due to fixture type and configuration, the entire fixture must be replaced.

Data and Assumptions

The eleven lighting ERO groups represent the lighting found in thirteen building types defined in the Volume 2: Baseline Detail (Halverson et al. 1993). These thirteen building types represent over 81 percent of the building square footage at VAFB. This 81 percent also represents approximately 95 percent of the actual interior lighting use at VAFB. Of the remaining 19 percent building square footage not considered in the analysis, more than half is considered to have minimal lighting needs or other energy use such as unheated storage, utility vaults, unmanned plant facilities, small pump houses, etc. The building type groups represented in the eleven ERO analysis groups are defined in Table 2.4.

TABLE 2.4. Building Type Groups for Lighting ERO Analysis

ADMIN	Administration building
BRK/ADM	Barracks includes barracks with administration and supply, etc.
COMCATN	Communications
HSG-FAM	Family housing
MTRPOOL	Maintenance shops for cars, trucks, tanks, and land vehicles
PRDCTN	Production/assembly facilities
R&D-1	Research and development buildings (operated on a continuous basis)
R&D-2	Research and development buildings (operated on an as needed basis for missile launch activities)
SHOP (+ SHOP-HVY, SHOP-WPN)	General, heavy equipment, and weapons maintenance facilities including Department of Engineering and Housing
TRAINING	Training/classrooms (not including flight simulator buildings)
WHS	Warehouse including cold storage

Analysis data and assumptions common to all of the lighting ERO groups follow. These include data and assumptions that effect energy consumption, costs, environmental issues and security.

- Lighting Technology Screening Matrix (LTSM). The first costs of fixture upgrades (either replacement or retrofit) that are feasible for a given type of existing fixture are determined using data from the LTSM database. The per-fixture wattage and maintenance requirements for each existing and post-retrofit configuration are also determined using the LTSM database. The LTSM is a software

package developed by Pacific Northwest Laboratory (PNL) for the Department of Energy (DOE) in support of the Federal Relighting Initiative to assist federal government facilities in their efforts to comply with mandated (10 CFR Part 436) life-cycle costing for energy efficient investments. The LSTM is a DOS-based software tool that calculates the life-cycle cost of an existing fixture and of a large number of potential energy-efficient replacements, both for one-on-one replacements and on a lumen-equivalent basis.

The LSTM can be used to evaluate retrofits for many common configurations of fluorescent, incandescent, and exit lighting systems for any level of operation, electricity price, discount rate, and utility rebate program. The full set of outputs that the LSTM provides for existing lighting system and each retrofit alterative are shown below:

Fixture name	Value of 1st year savings
Fixture code	Annualized ballast cost
Activity type	Annualized lamp cost
Lumen ratio	Annualized total O&M cost
Watts	Annualized capital cost
Ballast Life (yrs)	Annualized energy cost
Lamp life (yrs)	Annualized total cost
Installed cost	Life-cycle cost
Rebate value	Levelized energy cost
Annual kWh savings	Net present value (LSTM, 1993).

- Fixture Modification vs. Fixture Replacement. Fixtures can be upgraded by replacing selected parts (ballast, lamp, reflector, or lens) or by replacing the entire fixture. The former approach (replacement of selected parts) will be referred to as "retrofit," the latter as "replacement," and both as a fixture "upgrade." The best option for a given upgrade is determined by the relative costs in the LTSM except when site-specific (usually implementation labor or maintenance related) conditions dictate otherwise.

- Operating Hours. The hours of operation of interior lights were determined by building type group based on information gathered from VAFB and other regional and national lighting utilization data. The primary hours of operation of the majority of lights for on-, mid-, and off- peak utility periods and the percent that lights are on is summarized by building type in Tables 2.5 and 2.6 for occupied and unoccupied periods. The "percent on" numbers indicate the average fraction of lights turned on during occupied and unoccupied hours. Some lighting within buildings operates more or fewer hours than the majority of lights (exit lights, storage, etc.). These lights have hours of operation applied that are appropriate to their use within all building types.

TABLE 2.5. Primary Lighting Hours of Operation Per Year and Percent on for Occupied Periods

Bldg Type	Hours On Peak	Hours Mid Peak	Hours Off Peak	Percent Lights On
ADMIN	650	1560	390	70
BRK/ADM	390	910	650	40
COMCATN	650	1560	390	70
HSG-FAM	390	910	650	40
MTRPOOL	650	1560	390	70
PRDCTN	650	1560	390	70
R&D-1	650	1560	390	70
R&D-2	217	520	130	70
SHOP	650	1560	390	70
TRAING	650	1560	390	70
WHS	650	1560	390	70
WHS-CLD	650	1560	390	70

- O&M costs are included in this analysis for the family housing lighting (Table 2.13) because the use of compact flourescents in housing areas may require Base-sponsored lamp replacement, procurement, or disposal costs. In addition, compact flourescents use in family housing may require Base-supported lamp replacement to ensure the use of more efficient, but higher installed cost, compact flourescent technology.

- Fixture Type and Quantity. The existing fixture inventory was estimated for each building type. While detailed information was available for some buildings from site visits or plans, the lighting in the majority of the buildings could not be rigorously established with available resources. Estimates of the existing lighting stock were, therefore, developed based on walk-through audits of representative buildings and lighting plan drawings. The information from these walk-through audits and lighting plans were used to derive prototypical fixture counts and details for each building type represented. These counts were in turn used to extrapolate to total fixtures within a particular building type based on total VAFB square footage. This approach assumes that all of the buildings of a given type have the same fixture types, distribution, and use. Since the omitted building types represent a relatively small fraction of the total lighting energy, the

TABLE 2.6. Primary Lighting Hours of Operation Per Year and Percent on for Unoccupied Periods

Bldg Type	Hours On Peak	Hours Mid Peak	Hours Off Peak	Percent Lights On
ADMIN	130	130	5900	18
BAT/ADM	390	780	5640	10
COMCATN	130	130	5900	18
HSG-FAM	390	780	5640	10
MTRPOOL	130	130	5900	18
PRDCTN	130	130	5900	18
R&D-1	130	130	5900	18
R&D-2	43	43	1967	18
SHOP	130	130	5900	18
TRAING	130	130	5900	18
WHS	130	130	5900	18
WHS-CLD	130	130	5900	18

numbers in the accompanying tables are believed to reasonably characterize existing lighting at VAFB and the potential for efficiency improvements with available technologies.

- Existing Ballasts. The ballasts used in all existing fluorescent fixtures are considered to be standard 60-Hz inductive ballasts.

- Light Levels. Existing light levels are adequate or more than adequate for the visual activities conducted in a space unless otherwise noted. The retrofit fixtures will provide the same lighting level, or slightly less, and are, in all cases, intended to meet or exceed minimum federal lighting level standards. The lumen equivalence of replacement fixtures or retrofit packages cannot be determined exactly from the nominal fixture characteristics due to variations in fixture design and the lighting environment and task requirements. The ability of a given upgrade to provide an adequate level and quality of light should be field-checked in typical applications before proceeding with a large-scale retrofit.

- Salvage Value. The salvage value for used fixtures is small and has been assumed to be zero. Actual salvage value will be reflected in the cost proposals of competitive Energy Service

Company bidders. It is essential to the project's long-term success that the old fixtures be removed from VAFB to prevent their re-installation and inefficient use of electric power.

- Maintenance Costs. Maintenance cost savings are expressed as annualized values. Relamping costs that might occur every 5 years in the 25-year life of an ERO are converted to a present value, and the present value is then converted to a uniform series of yearly costs. Maintenance savings are due chiefly to longer lamp lives (e.g., HPS and fluorescent lamps have a much longer life than standard incandescent) that result in lower annual lamp replacement costs. In cases where the retrofit maintenance cost is only slightly less than the existing maintenance cost, the savings are taken to be zero. This results in a slightly conservative estimate of NPV and resource potential.

- Penetration of EROs. Unless otherwise stated, all feasible retrofits (100 percent penetration) are assumed to be implemented in the resource assessments for each ERO.

- Operations and Maintenance (O&M). The replacement or retrofit of incandescent fixtures results in reduced maintenance. Delamping also results in reduced maintenance. All other EROs result in post-retrofit maintenance requirements that are identical or nearly identical to the existing maintenance requirements.

  All non-energy O&M costs are reported as annualized values based on all major maintenance costs over the analysis period of 25 years. The operation of lighting systems will not be adversely affected by implementation of any of the EROs. An additional unmeasured benefit of the fixture replacement and retrofit EROs is that conversion to standard lighting systems over the entire site may eliminate the need to have multiple types of tubes, ballasts, etc., on hand for repair or replacement.

- Annualized O&M costs as reported in tables are dependent on the operating characteristics (hours of operation) of the lights being impacted. Therefore, the same fixture type may have a different annualized O&M cost from one table to the next, based on its hours of operation.

- Energy Security. None of the lighting EROs have significant impact on energy security.

- Environmental Impact. There are no negative environmental impacts associated with any of the lighting EROs, with the possible exception of the fluorescent fixture upgrades that will involve ballast disposal. Any replaced ballasts that are found to contain PCB compounds must be properly disposed of. Costs associated with this process vary but are considered to be around $6 per ballast in quantities of 100. In general, implementing lighting EROs will

decrease the need for electricity that may be produced from sources that have environmental impacts.

Results

The quantitative results of the lighting ERO assessments appear in Tables 2.7 through 2.20. The tables contain only those lighting fixture types that were found by the analysis to have life-cycle cost-effective retrofit options. Factors such as low yearly usage, existing efficient products, and lack of practical retrofit or replacement options render some existing fixture types cost effective and not subject to change.

Each table has three separate sections. In each section the existing and associated retrofit or replacement lighting fixture types are identified by a unique fixture code number. The first section contains information about each existing fixture type. The consumption values are extrapolated to represent the consumption of all similar fixtures in that building type throughout VAFB. The second section of the table contains similar information about the proposed retrofit or replacement lighting equipment. Each proposed retrofit or replacement is the one determined to be the most life cycle cost effective by the LTSM software. The last section of the table displays the pertinent economic parameters of the analysis.

Budget Implications. The total installed cost of implementing the ERO groups are shown in Table 2.7. This includes the installation and/or replacement of all necessary equipment and materials and associated labor.

TABLE 2.7. Total First Cost of ERO Groups

Building Type	Total Installed Cost (1992$)
ADMIN	559,017
BRK/ADM	293,968
COMCATN	1,082,588
HSG-FAM	1,970,296
MTR POOL	110,100
PRDCTN	42,532
R&D-1	178,705
R&D-2	1,315,839
SHOP	245,846
TRAINING	220,199
WHS	693,679

Energy, Demand, and Cost Savings. The first year electric energy and associated demand savings associated with the ERO groups are shown in Table 2.8. These estimates are based on 100 percent implementation of the ERO for a typical operating year.

TABLE 2.8. First Year Energy and Demand Savings

Building Type	First Year Savings (kWh)	kWh Savings Value (1992$)	First Year Savings (kW-mo)	kW Savings Value (1992$)	Total Value (1992$)
ADMIN	649,249	34,197	1,739	8,871	43,068
BRK/ADM	296,576	15,063	858	4,377	19,440
COMCATN	1,239,886	65,848	3,495	17,825	83,673
HSG-FAM	3,097,430	159,066	10,176	51,899	210,965
MTR POOL	166,741	8,848	468	2,385	11,233
PRDCTN	44,877	2,360	130	664	3,024
R&D-1	233,395	12,129	483	2,465	14,594
R&D-2	1,838,352	97,919	5,274	26,899	124,819
SHOP	284,408	15,039	781	3,982	19,021
TRAINING	252,869	13,363	691	3,527	16,889
WHS	1,150,946	60,929	3,182	16,226	77,155

Operations and Maintenance (O&M) Impacts. Maintenance cost savings for the ERO groups are shown in Table 2.9. It is recommended that a supply of high efficiency lighting products such as T-8 lamps and ballasts be kept on hand for any fixtures not upgraded as part of these EROs as their lamps, ballasts or other hardware fail. This will eliminate the need to stock the variety of lamps and ballasts used in the older systems and will result in all fixtures eventually being upgraded with a minimal administrative effort.

TABLE 2.9. Operations and Maintenance Savings

Building Type	Yearly O&M Savings (1992$)
ADMIN	34,210
BRK/ADM	24,630
COMCATN	38,728
HSG-FAM	105,140
MTR POOL	3,894
PRDCTN	2,125
R&D-1	24,964
R&D-2	58,202
SHOP	12,207
TRAINING	10,949
WHS	30,486

Energy Security. The security of energy supply and distribution to VAFB will not be affected by implementation of this ERO.

Environmental Issues. In general, the implementation of this ERO will decrease the need for electricity that may be produced from sources that have environmental impacts. The disposal of PCB-bearing ballasts may, however, have to be addressed, as it is not known how many, if any, PCB-type ballasts exist at VAFB. If virtually all older fluorescent ballasts are targeted for replacement as recommended in this ERO, the beneficial side effect will be the proper disposal of all offending ballasts.

TABLE 2.10. Lighting EROs for Administration Buildings

Existing Lighting Operating Parameters

Fixture Code	Existing Equipment				Energy Consumption (kWh)			Sum of 12 Monthly Coincident Demands (kW-mo)		
	Fixture Type	Watts Each	No. of Units	Bldg. Area	On-Peak	Mid-Peak	Off-Peak	On-Peak	Mid-Peak	Off-Peak
3	FL 2X4 2-40 STD	88	2,727	office	127,841	288,083	356,748	2,245	NA	NA
1	FL 1X8 2-96 STD	175	2,530	office	211,789	483,792	591,010	3,719	NA	NA
4	EXIT - INC (2X15)	30	374	hall	8,754	18,968	70,586	135	NA	NA

Efficient Lighting Operating Parameters

Fixture Code	Energy Resource Opportunity				Energy Consumption (kWh)			Sum of 12 Month Coincident Demands (kW-mo)		
	New Fixture Type	Watts Each	No. of Units	Bldg. Area	On-Peak	Mid-Peak	Off-Peak	On-Peak	Mid-Peak	Off-Peak
3	FL 2X4 2-18 ELC	65	2,727	office	84,782	187,585	236,617	1,488	NA	NA
1	FL 1X8 2-86 ELC	134	2,530	office	162,170	375,103	452,544	2,847	NA	NA
4	EXIT - LED	5	374	hall	1,459	3,161	11,766	22	NA	NA

Efficient Lighting ERO Economics

Fixture Code	Non-Energy Costs				First Year Energy & Demand Savings					Life-Cycle Cost	
	Instal. Cost $	Exist. O&M $	Retrofit O&M $	Fixture Life, yr.	Energy (kWh)	Demand (kW-mo)	Energy (1992 $)	Demand (1992 $)	Total (1992 $)	NPV (1992$)	Value Index
3	228,259	13,061	5,944	NA	283,545	756	14,037	3,855	17,892	141,429	0.63
1	266,305	20,972	13,736	NA	303,773	871	16,179	4,443	20,623	143,308	0.54
4	66,443	19,858	0	NA	81,931	112	3,861	572	4,553	292,001	4.39

TABLE 2.11. Lighting EROs for Barracks/Administration Buildings

Existing Lighting Operating Parameters

Fixture Code	Existing Equipment				Energy Consumption (kWh)			Sum of 12 Monthly Coincident Demands (kW-mo)		
	Fixture Type	Watts Each	No. of Units	Bldg. Area	On-Peak	Mid-Peak	Off-Peak	On-Peak	Mid-Peak	Off-Peak
7	INC 60 CEIL	60	3,589	rooms	41,984	96,188	177,454	1,034	NA	NA
8	EXIT - INC (2X15)	30	277	hall	6,475	14,029	52,215	100	NA	NA

Efficient Lighting Operating Parameters

Fixture Code	Energy Resource Opportunity				Energy Consumption (kWh)			Sum of 12 Monthly Coincident Demands (kW-mo)		
	New Fixture Type	Watts Each	No. of Units	Bldg. Area	On-Peak	Mid-Peak	Off-Peak	On-Peak	Mid-Peak	Off-Peak
7	CFL 11 CEIL FIX1	15	3,589	rooms	10,496	23,797	44,363	258	NA	NA
8	EXIT - LED	5	277	hall	1,079	2,338	8,703	17	NA	NA

Efficient Lighting ERO Economics

Fixture Code	Non-Energy Costs				First Year Energy & Demand Savings					Life-Cycle Cost	
	Instal. Cost $	Exist. O&M $	Retrofit O&M $	Fixture Life, yr.	Energy (kWh)	Demand (kW-mo)	Energy (1982 $)	Demand (1982 $)	Total (1982 $)	NPV $	Value Index
7	244,824	16,258	6,317	NA	235,977	775	12,118	3,954	16,072	137,571	0.56
8	40,144	14,688	0	NA	60,600	83	2,844	423	3,268	215,975	4.39

TABLE 2.12. Lighting EROs for Communication Buildings

Existing Lighting Operating Parameters

Fixture Code	Existing Equipment				Energy Consumption (kWh)			Sum of 12 Monthly Coincident Demands (kW-mo)		
	Fixture Type	Watts Each	No. of Units	Bldg. Area	On-Peak	Mid-Peak	Off-Peak	On-Peak	Mid-Peak	Off-Peak
10	FL 2X4 2-40 STD	88	988	office	45,434	105,931	128,788	788	NA	NA
9	FL 1X8 2-96 STD	175	9,206	office	770,756	1,797,035	2,150,836	13,533	NA	NA
11	EXIT - INC (2X15)	30	186	hall	4,361	9,428	35,083	67	NA	NA

Efficient Lighting Operating Parameters

Fixture Code	Energy Resource Opportunity				Energy Consumption (kWh)			Sum of 12 Monthly Coincident Demands (kW-mo)		
	New Fixture Type	Watts Each	No. of Units	Bldg. Area	On-Peak	Mid-Peak	Off-Peak	On-Peak	Mid-Peak	Off-Peak
10	FL 2X4 2-T8 ELC	65	988	office	30,135	70,280	84,083	529	NA	NA
9	FL 1X8 2-96 ELC	134	9,206	office	560,179	1,376,016	1,646,926	10,363	NA	NA
11	EXIT - LED	5	186	hall	725	1,571	5,847	11	NA	NA

Efficient Lighting ERO Economics

Fixture Code	Non-Energy Costs				First Year Energy & Demand Savings					Life Cycle Cost	
	Instal. Cost $	Exist. O&M $	Retrofit O&M $	Fixture Life, yr.	Energy (kWh)	Demand (kW-mo)	Energy (1982 $)	Demand (1982 $)	Total (1982 $)	NPV $	Value Index
10	80,415	4,642	2,113	NA	93,883	289	4,988	1,370	6,359	50,283	0.63
9	988,153	76,321	49,991	NA	1,105,507	3,171	58,881	16,170	75,052	521,535	0.54
11	33,019	9,999	0	NA	40,716	56	1,978	284	2,263	145,112	4.39

TABLE 2.13. Lighting EROs for Family Housing

Existing Lighting Operating Parameters

Fixture Code	Existing Equipment				Energy Consumption (kWh)			Sum of 12 Monthly Coincident Demands (kW-mo)		
	Fixture Type	Watts Each	No. of Units	Bldg. Area	On-Peak	Mid-Peak	Off-Peak	On-Peak	Mid-Peak	Off-Peak
16	INC 60 CEIL	60	5,888	HSG	68,902	156,179	291,157	1,666	NA	NA
15	INC 60 CAN	60	1,963	HSG	22,967	52,060	97,052	555	NA	NA
14	INC 4-60 CEIL	240	1,963	HSG	91,870	208,238	388,209	2,221	NA	NA
13	INC 2-60 WALL	120	3,926	HSG	91,870	208,238	388,209	2,221	NA	NA
12	INC 2-60 CEIL	120	11,778	HSG	275,610	624,715	1,164,628	6,784	NA	NA

Efficient Lighting Operating Parameters

Fixture Code	Energy Resource Opportunity				Energy Consumption (kWh)			Sum of 12 Month Coincident Demands (kW-mo)		
	New Fixture Type	Watts Each	No. of Units	Bldg. Area	On-Peak	Mid-Peak	Off-Peak	On-Peak	Mid-Peak	Off-Peak
16	CFL 11 CEIL FIXT	15	5,888	HSG	17,226	39,045	72,789	424	NA	NA
15	FL 11 CAN	15	1,963	HSG	5,742	13,015	24,263	141	NA	NA
14	CFL 4-11 CEIL	60	1,963	HSG	22,967	52,060	97,052	565	NA	NA
13	CFL 2-11 CEIL FIXT	30	3,926	HSG	22,967	52,060	97,052	565	NA	NA
12	CFL 2-11 CEIL FIXT	30	11,778	HSG	68,902	156,179	291,157	1,666	NA	NA

Efficient Lighting ERO Economics

Fixture Code	Non-Energy Costs				First Year Energy & Demand Savings					Life-Cycle Cost	
	Instal. Cost $	Exist. O&M $	Retrofit O&M $	Fixture Life, yr.	Energy (kWh)	Demand (kW-mo)	Energy (1992 $)	Demand (1992 $)	Total (1992 $)	NPV (1992$)	Value Index
16	401,895	28,676	10,345	NA	387,179	1,272	19,883	6,487	26,371	225,720	0.56
15	168,134	8,863	5,555	NA	129,060	424	6,626	2,162	8,790	10,177	0.06
14	183,779	18,865	15,194	NA	516,238	1,696	26,511	8,650	35,161	387,426	2.11
13	297,753	35,531	14,723	NA	516,238	1,696	26,511	8,650	35,161	524,972	1.76
12	918,835	106,563	45,582	NA	1,548,715	5,088	79,533	25,950	105,483	1,528,495	1.66

TABLE 2.14. Lighting EROs for Motor Pool Buildings

Existing Lighting Operating Parameters

Fixture Code	Existing Equipment				Energy Consumption (kWh)			Sum of 12 Monthly Coincident Demands (kW-mo)		
	Fixture Type	Watts Each	No. of Units	Bldg. Area	On-Peak	Mid-Peak	Off-Peak	On-Peak	Mid-Peak	Off-Peak
23	MERC 175	210	85	shop	5,578	20,002	23,840	151	NA	NA
22	INC 150 CEIL	150	34	shop	2,451	5,715	6,840	43	NA	NA
21	FL 2X4 3-40 STD	147	56	office	3,946	9,201	11,012	69	NA	NA
20	FL 2X4 2-40 STD	98	29	office	1,373	3,200	3,830	24	NA	NA
19	FL 1X8 4-96 STD	350	129	shop	21,651	50,481	60,419	380	NA	NA
18	FL 1X8 3-96 STD	270	195	shop	25,211	58,781	70,353	443	NA	NA
17	FL 1X8 2-96 STD	175	127	shop	10,621	24,764	29,640	186	NA	NA
24	EXIT - INC (2X15)	30	32	hall	750	1,624	6,044	12	NA	NA

Efficient Lighting Operating Parameters

Fixture Code	Energy Resource Opportunity				Energy Consumption (kWh)			Sum of 12 Monthly Coincident Demands (kW-mo)		
	New Fixture Type	Watts Each	No. of Units	Bldg. Area	On-Peak	Mid-Peak	Off-Peak	On-Peak	Mid-Peak	Off-Peak
23	HPS 100 PERD	130	85	shop	5,311	12,382	14,520	83	NA	NA
22	CFL 27 INTEGRAL UNIT	27	34	shop	441	1,029	1,231	8	NA	NA
21	FL 2X4 2-T8 ELC REF	65	56	office	1,745	4,068	4,869	31	NA	NA
20	FL 2X4 2-T8 ELC	65	29	office	910	2,123	2,541	16	NA	NA
19	FL 1X8 3-96 ELC REF	201	129	shop	12,434	28,990	34,698	218	NA	NA
18	FL 1X8 3-96 ELC	201	195	shop	18,768	43,759	52,374	330	NA	NA
17	FL 1X8 2-96 ELC	134	127	shop	8,133	18,962	22,695	143	NA	NA
24	EXIT - LED	5	32	hall	125	271	1,007	2	NA	NA

Efficient Lighting ERO Economics

Fixture Code	Non-Energy Costs				First Year Energy & Demand Savings					Life-Cycle Cost	
	Instal. Cost $	Exist. O&M $	Retrofit O&M $	Fixture Life, yr.	Energy (kWh)	Demand (kW-mo)	Energy (1992 $)	Demand (1992 $)	Total (1992 $)	NPV (1992$)	Value Index
23	13,065	184	377	NA	20,008	57	1,064	253	1,358	4,048	0.31
22	881	296	254	NA	12,305	35	655	180	835	12,037	13.67
21	9,768	372	122	NA	13,477	39	718	197	915	7,358	0.75
20	2,429	140	64	NA	2,830	8	151	41	192	1,519	0.63
19	34,091	1,888	1,068	NA	56,429	162	3,006	825	3,831	34,306	1.01
18	30,821	2,426	1,591	NA	39,444	113	2,101	577	2,678	20,838	0.68
17	13,355	1,052	689	NA	15,234	44	811	223	1,034	7,187	0.54
24	5,689	1,700	0	NA	7,015	10	341	49	390	25,000	4.39

TABLE 2.15. Lighting EROs for Production buildings

Existing Lighting Operating Parameters

Fixture Code	Existing Equipment				Energy Consumption (kWh)			Sum of 12 Monthly Coincident Demands (kW-mo)		
	Fixture Type	Watts Each	No. of Units	Bldg. Area	On-Peak	Mid-Peak	Off-Peak	On-Peak	Mid-Peak	Off-Peak
47	INC 150 WALL	150	1	mech	28	42	94	2	NA	NA
46	INC 100 CEIL	100	1	mech	19	28	63	1	NA	NA
39	FL 2X4 4-40 STD	196	1	guard	138	298	1,110	2	NA	NA
33	FL 2X4 4-40 STD	196	40	office	3,751	8,745	10,466	66	NA	NA
38	FL 2X4 4-40 STD	196	9	office	844	1,968	2,356	15	NA	NA
40	FL 2X4 4-40 STD	196	2	hall	242	563	716	4	NA	NA
34	FL 2X4 4-40 STD	196	14	mech	517	767	1,726	31	NA	NA
37	FL 2X4 4-40 STD	196	1	mech	37	55	123	2	NA	NA
35	FL 2X4 4-40 EEF	160	6	office	459	1,071	1,282	8	NA	NA
42	FL 2X4 4-40 EEF	160	5	office	383	892	1,068	7	NA	NA
41	FL 2X4 4-40 EEF	160	85	office	6,506	15,169	18,156	114	NA	NA
43	FL 2X4 4-40 EEF	160	2	hall	196	460	584	3	NA	NA
28	FL 1X4 2-40 STD	96	12	office	563	1,312	1,570	10	NA	NA
26	FL 1X4 2-40 STD	96	9	office	422	984	1,177	7	NA	NA
29	FL 1X4 2-40 STD	96	10	hall	605	1,408	1,789	11	NA	NA
31	FL 1X4 2-40 EEF	88	1	office	42	98	117	1	NA	NA
27	FL 1X4 2-40 EEF	88	10	office	421	982	1,175	7	NA	NA
30	FL 1X4 2-40 EEF	88	2	hall	109	253	321	2	NA	NA
25	EXIT - INC (2X15)	30	24	hall	562	1,217	4,529	9	NA	NA

Efficient Lighting Operating Parameters

Fixture Code	Energy Resource Opportunity				Energy Consumption (kWh)			Sum of 12 Monthly Coincident Demands (kW-mo)		
	New Fixture Type	Watts Each	No. of Units	Bldg. Area	On-Peak	Mid-Peak	Off-Peak	On-Peak	Mid-Peak	Off-Peak
47	CFL 27 INTEGRAL UNIT	27	1	mech	5	8	17	0	NA	NA
46	CFL 27 INTEGRAL UNIT	27	1	mech	5	8	17	0	NA	NA
39	FL 2X4 3-T8 ELC REF	97	1	guard	68	148	549	1	NA	NA
33	FL 2X4 3-T8 ELC REF	97	40	office	1,856	4,328	5,180	33	NA	NA
38	FL 2X4 3-T8 ELC REF	97	9	office	418	974	1,165	7	NA	NA
40	FL 2X4 3-T8 ELC REF	97	2	hall	120	279	354	2	NA	NA
34	FL 2X4 4-T8 ELC	122	14	mech	322	477	1,074	19	NA	NA
37	FL 2X4 4-T8 ELC	122	1	mech	23	34	77	1	NA	NA
35	FL 2X4 3-T8 ELC REF	97	6	office	278	649	777	5	NA	NA
42	FL 2X4 3-T8 ELC REF	97	5	office	232	541	647	4	NA	NA
41	FL 2X4 3-T8 ELC REF	97	85	office	3,944	9,196	11,007	69	NA	NA
43	FL 2X4 3-T8 ELC REF	97	2	hall	120	279	354	2	NA	NA
28	FL 1X4 2-T8 ELC	65	12	office	373	870	1,041	7	NA	NA
26	FL 1X4 2-T8 ELC	65	9	office	280	653	781	5	NA	NA
29	FL 1X4 2-T8 ELC	65	10	hall	401	934	1,187	7	NA	NA
31	FL 1X4 2-T8 ELC	65	1	office	31	73	87	1	NA	NA
27	FL 1X4 2-T8 ELC	65	10	office	311	725	868	5	NA	NA
30	FL 1X4 2-T8 ELC	65	2	hall	80	187	237	1	NA	NA
25	EXIT - LED	5	24	hall	94	203	755	1	NA	NA

TABLE 2.15. (contd)

Efficient Lighting ERO Economics

Fixture Code	Non-Energy Costs				First Year Energy & Demand Savings					Life-Cycle Cost	
	Instal. Cost $	Exist. O&M $	Retrofit O&M $	Fixture Life, yr.	Energy (kWh)	Demand (kW-mo)	Energy (1992 $)	Demand (1992 $)	Total (1992 $)	NPV (1992$)	Value Index
47	28	3	2	NA	135	1	7	7	14	200	7.76
46	26	2	2	NA	80	1	4	4	8	103	3.99
39	217	24	18	NA	781	1	36	5	43	815	2.37
33	8,683	315	132	NA	11,598	33	618	170	787	5,596	0.64
38	1,954	71	30	NA	2,610	7	139	38	177	1,259	0.64
40	434	22	12	NA	768	2	41	11	52	473	1.09
34	1,871	21	6	NA	1,136	12	59	60	120	116	0.06
37	134	2	0	NA	81	1	4	4	9	8	0.06
35	1,302	49	20	NA	1,107	3	59	16	75	228	0.17
42	1,085	41	16	NA	923	3	49	13	63	190	0.17
41	18,452	689	280	NA	15,684	45	835	229	1,065	3,227	0.17
43	434	23	12	NA	489	1	26	7	33	206	0.47
28	996	57	26	NA	1,160	3	62	17	79	622	0.63
26	747	43	20	NA	870	2	46	13	59	467	0.63
29	830	67	40	NA	1,280	4	68	18	86	838	1.01
31	83	5	2	NA	67	0	4	1	5	24	0.29
27	830	49	22	NA	674	2	36	10	46	242	0.29
30	166	14	8	NA	178	0	9	3	12	96	0.58
25	4,262	1,274	0	NA	5,256	7	285	37	292	18,732	4.39

TABLE 2.16. Lighting EROs for R&D-1 Buildings

Existing Lighting Operating Parameters

Fixture Code	Existing Equipment				Energy Consumption (kWh)			Sum of 12 Monthly Coincident Demands (kW-mo)		
	Fixture Type	Watts Each	No. of Units	Bldg. Area	On-Peak	Mid-Peak	Off-Peak	On-Peak	Mid-Peak	Off-Peak
84	MERC VAPOR 400W WALL	460	28	office	2,051	4,782	5,724	38	NA	NA
83	MERC VAPOR 400W CEIL	460	19	office	1,367	3,188	3,816	24	NA	NA
82	MERC 400 PEND	460	210	exterior	19,020	45,356	20,773	347	NA	NA
81	INC 60 CEIL	60	75	office	713	1,663	1,991	13	NA	NA
80	INC 500 PEND	500	210	office	16,721	38,985	46,661	294	NA	NA
79	INC 300 CEIL	300	135	office	6,465	15,074	18,042	114	NA	NA
85	EXIT - INC (2X15)	30	446	hall	10,427	22,562	84,083	53	NA	NA

Efficient Lighting Operating Parameters

Fixture Code	Energy Resource Opportunity				Energy Consumption (kWh)			Sum of 12 Monthly Coincident Demands (kW-mo)		
	New Fixture Type	Watts Each	No. of Units	Bldg. Area	On-Peak	Mid-Peak	Off-Peak	On-Peak	Mid-Peak	Off-Peak
84	HPS 200 WALL	240	28	office	1,070	2,496	2,986	19	NA	NA
83	HPS 200 PEND	240	19	office	713	1,663	1,991	13	NA	NA
82	HPS 200 PEND	240	210	exterior	9,924	23,664	10,838	181	NA	NA
81	CFL 11 CEIL FIXT	15	75	office	178	416	498	3	NA	NA
80	MH 175 PEND	210	210	office	7,023	16,374	19,597	123	NA	NA
79	MH 100 PEND	130	135	office	2,802	6,532	7,818	49	NA	NA
85	EXIT - LED	5	446	hall	1,738	3,765	14,014	9	NA	NA

Efficient Lighting ERO Economics

Fixture Code	Non-Energy Costs				First Year Energy & Demand Savings					Life-Cycle Cost	
	Instal. Cost $	Exist. O&M $	Retrofit O&M $	Fixture Life, yr.	Energy (kWh)	Demand (kW-mo)	Energy (1992 $)	Demand (1992 $)	Total (1992 $)	NPV (1992$)	Value Index
84	4,977	18	1	NA	6,006	17	320	88	408	1,268	0.25
83	2,964	12	1	NA	4,004	11	213	59	272	1,199	0.40
82	33,344	109	0	NA	40,723	166	2,323	847	3,170	14,885	0.45
81	5,086	224	51	NA	3,276	9	174	48	222	736	0.14
80	32,925	1,334	430	NA	38,373	170	3,162	868	4,031	39,646	1.20
79	20,272	596	499	NA	22,430	64	1,195	328	1,523	3,560	0.18
85	79,137	23,652	0	NA	97,585	45	4,741	227	4,969	341,102	4.31

TABLE 2.17. Lighting EROs for R&D-2 Building

Existing Lighting Operating Parameters

Fixture Code	Existing Equipment				Energy Consumption (kWh)			Sum of 12 Monthly Coincident Demands (kW-mo)		
	Fixture Type	Watts Each	No. of Units	Bldg. Area	On-Peak	Mid-Peak	Off-Peak	On-Peak	Mid-Peak	Off-Peak
66	MERCURY VAPOR 400W WALL	460	30	office	6,845	15,464	18,544	117	NA	NA
65	MERCURY VAPOR 400W CEIL	460	20	office	4,430	10,329	12,363	78	NA	NA
64	MERC 400 PEND	460	226	exterior	61,623	146,946	67,300	1,125	NA	NA
63	INC 60 CEIL	60	81	office	2,311	5,389	6,450	41	NA	NA
62	INC 500 PEND	500	226	office	54,174	126,307	151,175	961	NA	NA
61	INC 300 CEIL	300	146	office	20,947	48,839	58,454	368	NA	NA
55	FL 2X4 3-40 STD	147	1,233	office	86,714	202,176	241,980	1,523	NA	NA
54	FL 2X4 3-34 STD	127	1,867	office	114,868	267,350	319,986	2,013	NA	NA
53	FL 2X4 2-40 STD	98	656	office	30,910	72,068	86,257	543	NA	NA
52	FL 2X4 2-34 STD	79	312	office	11,783	27,466	32,909	207	NA	NA
51	FL 1X8 2-96 STD	175	4,374	office	366,154	853,667	1,021,773	6,429	NA	NA
50	FL 1X4 2-40 STD	96	523	office	24,540	57,214	68,476	431	NA	NA
67	EXIT - INC (2X15)	30	481	hall	11,261	24,366	90,807	173	NA	NA

Efficient Lighting Operating Parameters

Fixture Code	Energy Resource Opportunity				Energy Consumption (kWh)			Sum of 12 Monthly Coincident Demands (kW-mo)		
	New Fixture Type	Watts Each	No. of Units	Bldg. Area	On-Peak	Mid-Peak	Off-Peak	On-Peak	Mid-Peak	Off-Peak
66	HPS 200 WALL	240	30	office	3,467	8,084	9,675	61	NA	NA
65	HPS 200 PEND	240	20	office	2,311	5,389	6,450	41	NA	NA
64	HPS 200 PEND	240	226	exterior	32,151	76,668	35,113	587	NA	NA
63	CFL 11 CEIL FIXT	15	81	office	578	1,347	1,613	10	NA	NA
62	MH 175 PEND	210	226	office	22,753	53,049	63,493	400	NA	NA
61	MH 100 PEND	130	146	office	9,077	21,163	25,330	159	NA	NA
55	FL 2X4 2-T8 ELC REF	65	1,233	office	38,343	89,397	106,986	673	NA	NA
54	FL 2X4 2-T8 ELC REF	65	1,867	office	58,086	135,533	162,773	1,030	NA	NA
53	FL 2X4 2-T8 ELC	65	656	office	20,502	47,800	57,211	360	NA	NA
52	FL 2X4 2-34 ELC	63	312	office	9,405	21,927	26,244	165	NA	NA
51	FL 1X8 2-96 ELC	134	4,374	office	280,370	653,866	782,386	4,923	NA	NA
50	FL 1X4 2-T8 ELC	65	523	office	16,276	37,946	45,430	286	NA	NA
67	EXIT - LED	5	481	hall	1,877	4,066	15,134	29	NA	NA

Efficient Lighting ERO Economics

Fixture Code	Non-Energy Costs				First Year Energy & Demand Savings					Life-Cycle Cost	
	Instal. Cost $	Exist. O&M $	Retrofit O&M $	Fixture Life, yr.	Energy (kWh)	Demand (kW-mo)	Energy (1982 $)	Demand (1982 $)	Total (1982 $)	NPV (1982$)	Value Index
66	5,375	83	155	NA	19,457	56	1,036	265	1,321	13,014	2.42
65	3,201	56	103	NA	12,971	37	69.	190	861	9,058	2.83
64	36,010	557	963	NA	131,936	536	7,526	2,744	10,270	100,144	3.03
63	5,463	734	383	NA	10,613	30	565	156	721	10,249	1.87
62	35,557	4,348	2,358	NA	192,360	552	10,245	2,814	13,059	185,802	5.23
61	21,883	1,941	2,303	NA	72,989	208	3,870	1,063	4,933	45,361	2.07
55	214,850	8,545	2,688	NA	286,132	849	15,772	4,332	20,104	167,106	0.78
54	328,545	13,079	4,114	NA	342,711	993	18,253	5,013	23,266	148,349	0.44
53	54,709	3,156	1,437	NA	63,722	183	3,394	932	4,326	34,196	0.63
52	21,163	1,557	771	NA	14,622	42	779	214	993	5,043	0.24
51	430,405	36,257	23,748	NA	525,180	1,506	27,972	7,682	35,654	247,760	0.54
50	43,433	2,507	1,141	NA	50,589	145	2,694	740	3,434	27,148	0.63
67	85,465	25,543	0	NA	105,368	144	5,120	736	5,857	175,598	4.39

TABLE 2.18. Lighting EROs for Shop Buildings

Existing Lighting Operating Parameters

Fixture Code	Existing Equipment				Energy Consumption (kWh)			Sum of 12 Monthly Coincident Demands (kW-mo)		
	Fixture Type	Watts Each	No. of Units	Bldg. Area	On-Peak	Mid-Peak	Off-Peak	On-Peak	Mid-Peak	Off-Peak
87	FL 2X4 2-40 STD	88	1,116	office	82,343	122,038	146,065	919	NA	NA
86	FL 1X8 2-86 STD	175	1,276	office	106,822	240,056	296,093	1,576	NA	NA
88	EXIT - INC (2X15)	30	106	hall	2,488	5,391	20,064	38	NA	NA

Efficient Lighting Operating Parameters

Fixture Code	Energy Resource Opportunity				Energy Consumption (kWh)			Sum of 12 Monthly Coincident Demands (kW-mo)		
	New Fixture Type	Watts Each	No. of Units	Bldg. Area	On-Peak	Mid-Peak	Off-Peak	On-Peak	Mid-Peak	Off-Peak
87	FL 2X4 2-18 ELC	65	1,116	office	34,717	50,544	88,880	610	NA	NA
86	FL 1X8 2-86 ELC	134	1,276	office	81,795	190,707	226,254	1,436	NA	NA
88	EXIT - LED	5	106	hall	415	898	3,344	6	NA	NA

Efficient Lighting ERO Economics

Fixture Code	Non-Energy Costs				First Year Energy & Demand Savings					Life-Cycle Cost	
	Instal. Cost $	Exist. O&M $	Retrofit O&M $	Fixture Life, yr.	Energy (kWh)	Demand (kW-mo)	Energy (1992 $)	Demand (1992 $)	Total (1992 $)	NPV (1992$)	Value Index
87	62,643	5,348	2,434	NA	107,905	308	5,747	1,576	7,328	37,507	0.83
86	134,319	10,578	6,928	NA	153,216	439	8,161	2,241	10,402	72,262	0.54
88	18,884	5,644	0	NA	23,286	32	1,131	163	1,294	82,880	4.39

TABLE 2.19. Lighting EROs for Training Buildings

Existing Lighting Operating Parameters

Fixture Code	Existing Equipment				Energy Consumption (kWh)			Sum of 12 Monthly Coincident Demands (kW-mo)		
	Fixture Type	Watts Each	No. of Units	Bldg. Area	On-Peak	Mid-Peak	Off-Peak	On-Peak	Mid-Peak	Off-Peak
86	FL 1X8 2-86 STD	175	1,918	office	180,584	374,405	448,117	2,820	NA	NA
90	EXIT - INC (2X15)	30	103	hall	2,409	5,218	19,423	37	NA	NA

Efficient Lighting Operating Parameters

Fixture Code	Energy Resource Opportunity				Energy Consumption (kWh)			Sum of 12 Monthly Coincident Demands (kW-mo)		
	New Fixture Type	Watts Each	No. of Units	Bldg. Area	On-Peak	Mid-Peak	Off-Peak	On-Peak	Mid-Peak	Off-Peak
86	FL 1X8 2-86 ELC	134	1,918	office	122,561	254,057	343,130	2,159	NA	NA
90	EXIT - LED	5	103	hall	401	870	3,237	6	NA	NA

Efficient Lighting ERO Economics

Fixture Code	Non-Energy Costs				First Year Energy & Demand Savings					Life-Cycle Cost	
	Instal. Cost $	Exist. O&M $	Retrofit O&M $	Fixture Life, yr.	Energy (kWh)	Demand (kW-mo)	Energy (1992 $)	Demand (1992 $)	Total (1992 $)	NPV (1992$)	Value Index
86	201,519	15,901	10,415	NA	230,328	661	12,288	3,369	15,657	108,880	0.54
90	18,290	5,463	0	NA	22,541	31	1,095	157	1,253	80,336	4.39

TABLE 2.20. Lighting EROs for Warehouse Buildings

Existing Lighting Operating Parameters

Fixture Code	Existing Equipment				Energy Consumption (kWh)			Sum of 12 Monthly Coincident Demands (kW-mo)		
	Fixture Type	Watts Each	No. of Units	Bldg. Area	On-Peak	Mid-Peak	Off-Peak	On-Peak	Mid-Peak	Off-Peak
93	INC 300 CEIL	300	1,064	office	152,745	356,128	428,242	2,682	NA	NA
92	FL 2X4 2-40 STD	96	2,956	office	136,602	323,153	388,775	2,434	NA	NA
91	FL 1X8 2-96 STD	175	2,129	office	178,202	415,483	497,283	3,129	NA	NA
94	EXIT - INC (2X15)	30	364	hall	8,518	18,456	68,690	131	NA	NA

Efficient Lighting Operating Parameters

Fixture Code	Energy Resource Opportunity				Energy Consumption (kWh)			Sum of 12 Monthly Coincident Demands (kW-mo)		
	New Fixture Type	Watts Each	No. of Units	Bldg. Area	On-Peak	Mid-Peak	Off-Peak	On-Peak	Mid-Peak	Off-Peak
93	MH 100 PEND	130	1,064	office	66,189	154,322	184,705	1,162	NA	NA
92	FL 2X4 2-T8 ELC	65	2,956	office	91,930	214,336	256,535	1,614	NA	NA
91	FL 1X8 2-96 ELC	134	2,129	office	136,452	318,141	380,777	2,396	NA	NA
94	EXIT - LED	5	364	hall	1,420	3,076	11,449	22	NA	NA

Efficient Lighting ERO Economics

Fixture Code	Non-Energy Costs				First Year Energy & Demand Savings					Life-Cycle Cost	
	Instal. Cost $	Exist. O&M $	Retrofit O&M $	Fixture Life, yr.	Energy (kWh)	Demand (kW-mo)	Energy (1992 $)	Demand (1992 $)	Total (1992 $)	NPV (1992$)	Value Index
93	159,641	14,155	16,784	NA	525,859	1,520	28,223	7,751	35,974	330,915	2.07
92	245,316	14,161	6,445	NA	285,730	819	15,218	4,179	19,396	153,334	0.63
91	224,073	17,646	11,558	NA	255,586	733	13,614	3,739	17,352	120,581	0.54
94	64,649	19,322	0	NA	79,720	109	3,573	857	4,430	284,120	4.39

Notes (for Section 2.4 Tables):

Bldg Type	Fixture Description in Table	Detailed Fixture Description
Existing Fixtures		
ADMIN	FL 2X4 2-40 STD	Fluorescent, 2' by 4', 2-40 Watt lamps, Standard Ballast
ADMIN	FL 1X8 2-96 STD	Fluorescent, 1' by 8', 2-75 Watt lamps, Standard Ballast
ADMIN	EXIT - INC (2X15)	Exit Sign, incandescent, 2-15 Watt lamps
BRK/ADM	INC 60 CEIL	Incandescent, Ceiling Mount, 60 Watt
BRK/ADM	EXIT - INC (2X15)	Exit Sign, incandescent, 2-15 Watt lamps
COMCATN	FL 2X4 2-40 STD	Fluorescent, 2' by 4', 2-40 Watt lamps, Standard Ballast
COMCATN	FL 1X8 2-96 STD	Fluorescent, 1' by 8', 2-75 Watt lamps, Standard Ballast
COMCATN	EXIT - INC (2X15)	Exit Sign, incandescent, 2-15 Watt lamps
HSG-FAM	INC 60 CEIL	Incandescent, Ceiling Mount, 60 Watt
HSG-FAM	INC 60 CAN	Incandescent, Ceiling "Can" Mount, 60 Watt
HSG-FAM	INC 4-60 CEIL	Incandescent, Ceiling Mount, 4-60 Watt
HSG-FAM	INC 2-60 WALL	Incandescent, Wall Mount, 2-60 Watt
HSG-FAM	INC 2-60 CEIL	Incandescent, Ceiling Mount, 2-60 Watt
MTR POOL	MERC 175	Mercury, 175 Watt
MTR POOL	INC 150 CEIL	Incandescent, Ceiling Mount, 150 Watt
MTR POOL	FL 2X4 3-40 STD	Fluorescent, 2' by 4', 3-40 Watt lamps, Standard Ballast
MTR POOL	FL 2X4 2-40 STD	Fluorescent, 2' by 4', 2-40 Watt lamps, Standard Ballast
MTR POOL	FL 1X8 4-96 STD	Fluorescent, 1' by 8', 4-75 Watt lamps, Standard Ballast
MTR POOL	FL 1X8 3-96 STD	Fluorescent, 1' by 8', 3-75 Watt lamps, Standard Ballast
MTR POOL	FL 1X8 2-96 STD	Fluorescent, 1' by 8', 2-75 Watt lamps, Standard Ballast
MTR POOL	EXIT - INC (2X15)	Exit Sign, incandescent, 2-15 Watt lamps
PRDCTN	INC 150 WALL	Incandescent, Wall Mount, 150 Watt
PRDCTN	INC 100 CEIL	Incandescent, Ceiling Mount, 100 Watt
PRDCTN	FL 2X4 4-40 STD	Fluorescent, 1' by 4', 4-40 Watt lamps, Standard Ballast
PRDCTN	FL 2X4 4-40 STD	Fluorescent, 1' by 4', 4-40 Watt lamps, Standard Ballast
PRDCTN	FL 2X4 4-40 STD	Fluorescent, 1' by 4', 4-40 Watt lamps, Standard Ballast
PRDCTN	FL 2X4 4-40 STD	Fluorescent, 1' by 4', 4-40 Watt lamps, Standard Ballast
PRDCTN	FL 2X4 4-40 STD	Fluorescent, 1' by 4', 4-40 Watt lamps, Standard Ballast
PRDCTN	FL 2X4 4-40 STD	Fluorescent, 1' by 4', 4-40 Watt lamps, Standard Ballast
PRDCTN	FL 2X4 4-40 EEF	Fluorescent, 1' by 4', 4-40 Watt lamps, Energy Efficient Ballast
PRDCTN	FL 2X4 4-40 EEF	Fluorescent, 1' by 4', 4-40 Watt lamps, Energy Efficient Ballast
PRDCTN	FL 2X4 4-40 EEF	Fluorescent, 1' by 4', 4-40 Watt lamps, Energy Efficient Ballast
PRDCTN	FL 2X4 4-40 EEF	Fluorescent, 1' by 4', 4-40 Watt lamps, Energy Efficient Ballast
PRDCTN	FL 1X4 2-40 STD	Fluorescent, 1' by 4', 2-40 Watt lamps, Standard Ballast
PRDCTN	FL 1X4 2-40 STD	Fluorescent, 1' by 4', 2-40 Watt lamps, Standard Ballast
PRDCTN	FL 1X4 2-40 STD	Fluorescent, 1' by 4', 2-40 Watt lamps, Standard Ballast
PRDCTN	FL 1X4 2-40 EEF	Fluorescent, 1' by 4', 2-40 Watt lamps, Energy Efficient Ballast
PRDCTN	FL 1X4 2-40 EEF	Fluorescent, 1' by 4', 2-40 Watt lamps, Energy Efficient Ballast
PRDCTN	FL 1X4 2-40 EEF	Fluorescent, 1' by 4', 2-40 Watt lamps, Energy Efficient Ballast
PRDCTN	EXIT - INC (2X15)	Exit Sign, incandescent, 2-15 Watt lamps
R&D-1	MERCURY VAPOR 400W WALL	Mercury, Wall Mount, 400 Watt
R&D-1	MERCURY VAPOR 400W CEIL	Mercury, Ceiling Mount, 400 Watt
R&D-1	MERC 400 PEND	Mercury, Pendent Mount, 400 Watt
R&D-1	INC 60 CEIL	Incandescent, Ceiling Mount, 60 Watt
R&D-1	INC 500 PEND	Incandescent, Pendent Mount, 500 Watt
R&D-1	INC 300 CEIL	Incandescent, Ceiling Mount, 300 Watt
R&D-1	EXIT - INC (2X15)	Exit Sign, incandescent, 2-15 Watt lamps
R&D-2	MERCURY VAPOR 400W WALL	Mercury, Wall Mount, 400 Watt
R&D-2	MERCURY VAPOR 400W CEIL	Mercury, Ceiling Mount, 400 Watt
R&D-2	MERC 400 PEND	Mercury, Pendent Mount, 400 Watt
R&D-2	INC 60 CEIL	Incandescent, Ceiling Mount, 60 Watt
R&D-2	INC 500 PEND	Incandescent, Pendent Mount, 500 Watt
R&D-2	INC 300 CEIL	Incandescent, Ceiling Mount, 300 Watt
R&D-2	FL 2X4 3-40 STD	Fluorescent, 2' by 4', 3-40 Watt lamps, Standard Ballast
R&D-2	FL 2X4 3-34 STD	Fluorescent, 2' by 4', 3-34 Watt lamps, Standard Ballast
R&D-2	FL 2X4 2-40 STD	Fluorescent, 2' by 4', 2-40 Watt lamps, Standard Ballast

Bldg Type	Fixture Description in Table	Detailed Fixture Description
Existing Fixtures (continued)		
R&D-2	FL 2X4 2-34 STD	Fluorescent, 2' by 4', 2-34 Watt lamps, Standard Ballast
R&D-2	FL 1X8 2-96 STD	Fluorescent, 1' by 8', 2-75 Watt lamps, Standard Ballast
R&D-2	FL 1X4 2-40 STD	Fluorescent, 1' by 4', 2-40 Watt lamps, Standard Ballast
R&D-2	EXIT - INC (2X15)	Exit Sign, incandescent, 2-15 Watt lamps
SHOP	FL 2X4 2-40 STD	Fluorescent, 2' by 4', 2-40 Watt lamps, Standard Ballast
SHOP	FL 1X8 2-96 STD	Fluorescent, 1' by 8', 2-75 Watt lamps, Standard Ballast
SHOP	EXIT - INC (2X15)	Exit Sign, incandescent, 2-15 Watt lamps
TRAINING	FL 1X8 2-96 STD	Fluorescent, 1' by 8', 2-75 Watt lamps, Standard Ballast
TRAINING	EXIT - INC (2X15)	Exit Sign, incandescent, 2-15 Watt lamps
WHS	INC 300 CEIL	Incandescent, Ceiling Mount, 300 Watt
WHS	FL 2X4 2-40 STD	Fluorescent, 2' by 4', 2-40 Watt lamps, Standard Ballast
WHS	FL 1X8 2-96 STD	Fluorescent, 1' by 8', 2-75 Watt lamps, Standard Ballast
WHS	EXIT - INC (2X15)	Exit Sign, incandescent, 2-15 Watt lamps
Replacement Fixtures		
ADMIN	FL 2X4 2-T8 ELC	Fluorescent, 2' by 4', 2-T8-32 Watt lamps, Electronic Ballast
ADMIN	FL 1X8 2-96 ELC	Fluorescent, 1' by 8', 2-75 Watt lamps, Electronic Ballast
ADMIN	EXIT - LED	Exit Sign, Light Emitting Diode (LED)
BRK/ADM	EXIT - LED	Exit Sign, Light Emitting Diode (LED)
BRK/ADM	CFL 11 CEIL FIXT	Compact Fluorescent, Ceiling Mount, 11 Watt^C
COMCATN	FL 2X4 2-T8 ELC	Fluorescent, 2' by 4', 2-T8-32 Watt lamps, Electronic Ballast
COMCATN	FL 1X8 2-96 ELC	Fluorescent, 1' by 8', 2-75 Watt lamps, Electronic Ballast
COMCATN	EXIT - LED	Exit Sign, Light Emitting Diode (LED)
HSG-FAM	FL 11 CAN	Compact Fluorescent, Ceiling "Can" mount, 11 Watt
HSG-FAM	CFL 4-11 CEIL	Compact Fluorescent, Ceiling Mount, 4-11 Watt
HSG-FAM	CFL 2-11 CEIL FIXT	Compact Fluorescent, Ceiling Mount, 2-11 Watt
HSG-FAM	CFL 2-11 CEIL FIXT	Compact Fluorescent, Ceiling Mount, 2-11 Watt
HSG-FAM	CFL 11 CEIL FIXT	Compact Fluorescent, Ceiling Mount, 11 Watt^C
MTR POOL	HPS 100 PEND	High Pressure Sodium, Pendent Mount, 100 Watt
MTR POOL	FL 2X4 2-T8 ELC REF	Fluorescent, 2' by 4', 2-T8-32 Watt lamps, Elect. Ball., Parabolic Reflector
MTR POOL	FL 2X4 2-T8 ELC	Fluorescent, 2' by 4', 2-T8-32 Watt lamps, Electronic Ballast
MTR POOL	FL 1X8 3-96 ELC REF	Fluorescent, 1' by 8', 3-75 Watt lamps, Elect. Ballast, Parabolic Reflector
MTR POOL	FL 1X8 3-96 ELC	Fluorescent, 1' by 8', 3-75 Watt lamps, Electronic Ballast
MTR POOL	FL 1X8 2-96 ELC	Fluorescent, 1' by 8', 2-75 Watt lamps, Electronic Ballast
MTR POOL	EXIT - LED	Exit Sign, Light Emitting Diode (LED)
MTR POOL	CFL 27 INTEGRAL UNIT	Compact Fluorescent "screw-in", 27 Watt
PRDCTN	FL 2X4 4-T8 ELC	Fluorescent, 2' by 4', 4-T8-32 Watt lamps, Electronic Ballast
PRDCTN	FL 2X4 4-T8 ELC	Fluorescent, 2' by 4', 4-T8-32 Watt lamps, Electronic Ballast
PRDCTN	FL 2X4 3-T8 ELC REF	Fluorescent, 2' by 4', 3-T8-32 Watt lamps, Elect. Ball., Parabolic Reflector
PRDCTN	FL 2X4 3-T8 ELC REF	Fluorescent, 2' by 4', 3-T8-32 Watt lamps, Elect. Ball., Parabolic Reflector
PRDCTN	FL 2X4 3-T8 ELC REF	Fluorescent, 2' by 4', 3-T8-32 Watt lamps, Elect. Ball., Parabolic Reflector
PRDCTN	FL 2X4 3-T8 ELC REF	Fluorescent, 2' by 4', 3-T8-32 Watt lamps, Elect. Ball., Parabolic Reflector
PRDCTN	FL 2X4 3-T8 ELC REF	Fluorescent, 2' by 4', 3-T8-32 Watt lamps, Elect. Ball., Parabolic Reflector
PRDCTN	FL 2X4 3-T8 ELC REF	Fluorescent, 2' by 4', 3-T8-32 Watt lamps, Elect. Ball., Parabolic Reflector
PRDCTN	FL 2X4 3-T8 ELC REF	Fluorescent, 2' by 4', 3-T8-32 Watt lamps, Elect. Ball., Parabolic Reflector
PRDCTN	FL 2X4 3-T8 ELC REF	Fluorescent, 2' by 4', 3-T8-32 Watt lamps, Elect. Ball., Parabolic Reflector
PRDCTN	FL 1X4 2-T8 ELC	Fluorescent, 1' by 4', 2-T8-32 Watt lamps, Electronic Ballast
PRDCTN	FL 1X4 2-T8 ELC	Fluorescent, 1' by 4', 2-T8-32 Watt lamps, Electronic Ballast
PRDCTN	FL 1X4 2-T8 ELC	Fluorescent, 1' by 4', 2-T8-32 Watt lamps, Electronic Ballast
PRDCTN	FL 1X4 2-T8 ELC	Fluorescent, 1' by 4', 2-T8-32 Watt lamps, Electronic Ballast
PRDCTN	FL 1X4 2-T8 ELC	Fluorescent, 1' by 4', 2-T8-32 Watt lamps, Electronic Ballast
PRDCTN	FL 1X4 2-T8 ELC	Fluorescent, 1' by 4', 2-T8-32 Watt lamps, Electronic Ballast
PRDCTN	EXIT - LED	Exit Sign, Light Emitting Diode (LED)
PRDCTN	CFL 27 INTEGRAL UNIT	Compact Fluorescent "screw-in", 27 Watt
PRDCTN	CFL 27 INTEGRAL UNIT	Compact Fluorescent "screw-in", 27 Watt
R&D-1	MH 175 PEND	Metal Halide, Pendent Mount, 175 Watt
R&D-1	MH 100 PEND	Metal Halide, Pendent Mount, 100 Watt

Bldg Type	Fixture Description in Table	Detailed Fixture Description
Replacement Fixtures (continued)		
R&D-1	HPS 200 WALL	High Pressure Sodium, Wall Mount, 200 Watt
R&D-1	HPS 200 PEND	High Pressure Sodium, Pendent Mount, 200 Watt
R&D-1	HPS 200 PEND	High Pressure Sodium, Pendent Mount, 200 Watt
R&D-1	EXIT - LED	Exit Sign, Light Emitting Diode (LED)
R&D-1	CFL 11 CEIL FIXT	Compact Fluorescent, Ceiling Mount, 11 Watt^C
R&D-2	MH 175 PEND	Metal Halide, Pendent Mount, 175 Watt
R&D-2	MH 100 PEND	Metal Halide, Pendent Mount, 100 Watt
R&D-2	HPS 200 WALL	High Pressure Sodium, Wall Mount, 200 Watt
R&D-2	HPS 200 PEND	High Pressure Sodium, Pendent Mount, 200 Watt
R&D-2	HPS 200 PEND	High Pressure Sodium, Pendent Mount, 200 Watt
R&D-2	FL 2X4 2-T8 ELC REF	Fluorescent, 2' by 4', 2-T8-32 Watt lamps, Elect. Ball., Parabolic Reflector
R&D-2	FL 2X4 2-T8 ELC REF	Fluorescent, 2' by 4', 2-T8-32 Watt lamps, Elect. Ball., Parabolic Reflector
R&D-2	FL 2X4 2-T8 ELC	Fluorescent, 2' by 4', 2-T8-32 Watt lamps, Electronic Ballast
R&D-2	FL 2X4 2-34 ELC	Fluorescent, 2' by 4', 2-34 Watt lamps, Electronic Ballast
R&D-2	FL 1X8 2-96 ELC	Fluorescent, 1' by 8', 2-75 Watt lamps, Electronic Ballast
R&D-2	FL 1X4 2-T8 ELC	Fluorescent, 1' by 4', 2-T8-32 Watt lamps, Electronic Ballast
R&D-2	EXIT - LED	Exit Sign, Light Emitting Diode (LED)
R&D-2	CFL 11 CEIL FIXT	Compact Fluorescent, Ceiling Mount, 11 Watt
SHOP	FL 2X4 2-T8 ELC	Fluorescent, 2' by 4', 2-T8-32 Watt lamps, Electronic Ballast
SHOP	FL 1X8 2-96 ELC	Fluorescent, 1' by 8', 2-75 Watt lamps, Electronic Ballast
SHOP	EXIT - LED	Exit Sign, Light Emitting Diode (LED)
TRAINING	FL 1X8 2-96 ELC	Fluorescent, 1' by 8', 2-75 Watt lamps, Electronic Ballast
TRAINING	EXIT - LED	Exit Sign, Light Emitting Diode (LED)
WHS	MH 100 PEND	Metal Halide, Pendent Mount, 100 Watt
WHS	FL 2X4 2-T8 ELC	Fluorescent, 2' by 4', 2-T8-32 Watt lamps, Electronic Ballast
WHS	FL 1X8 2-96 ELC	Fluorescent, 1' by 8', 2-75 Watt lamps, Electronic Ballast
WHS	EXIT - LED	Exit Sign, Light Emitting Diode (LED)

2.5 FAN AND PUMP MOTORS IN SLC-4 BUILDINGS

The motor ERO analysis at VAFB considered a primary efficiency option which involves the replacement of a single-speed standard-efficiency motor with a high-efficiency model.

This section addresses the fan and pump motors associated with HVAC and other systems in SLC-4 Facilities. Data for pump and fan motors in other facilities were not available in sufficient detail to perform adequate analysis. Many of the other facilities at VAFB with large fans and pumps are subject to long periods of inactivity and not considered consistent loads that are subject to energy improvements. The results of this analysis, however, may be applied to other similar facilities if their operation is considered stable for an extended period of time.

The replacement of currently installed standard efficiency motors with high-efficiency models was evaluated on both a replace-immediately (RI) and replace-on-failure (ROF) basis.

An inventory of motors larger than 1 hp was developed based on mechanical drawing sheet, equipment listing, and contact with site personnel. In addition, sizes, functions, and quantities were catalogued during site visits of these buildings. From this information a total motor equipment characterization was developed.

Description

Energy-efficient three-phase motors are manufactured with predominantly open drip proof (ODP) or total enclosed fan cooled (TEFC) enclosures. Motors up to 200 hp can be obtained in either 1,200, 1,800, or 3,600 rpm. They are particularly attractive in duty-cycling applications because they have less thermal stress than standard efficient motors due to lower overall heat loss. There are some applications, however, in which energy-efficient motors (EEMs) would not be a good alternative, namely in situations where high starting torque is required. This is because EEMs are optimized for low slip operation, which generally results in lower starting torque as compared to standard efficiency motors. For most HVAC fan and pump applications the

starting torque is not an issue. However, the starting characteristics should be kept in mind in preparing retrofit specifications for such things as the compressor motors.

This ERO considers the replacement of existing single-speed motors by the best currently available energy-efficient models. The majority of motors analyzed in this study fell under the duty-cycling or air-handling applications in which EEMs are a viable option.

Because of their relatively low energy consumption, motors of less than 1 horsepower are not considered in this analysis. Motors that currently operate at two speeds are also not considered, because the efficiency improvement possible by replacing a two-speed motor with a high-efficiency model is relatively small.

Assumptions

Technical assumptions are as follows:

- The operation schedules shown on mechanical drawings, or related by site personnel for the building spaces were considered to be accurate.
- Existing motors were considered to be sized correctly for current operations. However, significant additional savings could possibly be obtained by evaluating the size of each motor in relation to its load at the time of replacement. It is particularly important to check for fans and pumps that are producing higher flow rates than necessary and pumps that have been throttled with valves or flow regulators.

Cost estimating data are as follows:

- Maintenance costs for standard and high-efficiency motors are the same.
- Motor costs are based on the energy-efficient ODP motor costs. (ACEEE, 1991)
- The cost of installation labor is $132 for motors of 10 hp and less, $221 for 15 to 30 hp, $363 for 40 to 75 hp, and $856 for motors over 75 hp.
- Motor life expectancy is 15 years.
- Salvage value of motors is negligible.

Results

Quantitative results of the energy-efficient motor ERO analysis are presented in Tables 2.21 through 2.28. The results are reported by building type in 3-section tables. All motors larger than 1 hp are listed in the first block of each table along with their energy and demand numbers. The energy and demand numbers for the replacement technology appear in the second section. The third section contains all of the appropriate life cycle cost analysis values for each motor type.

Budget Implications. The first cost of all cost-effective energy-efficient motor retrofits is $107,211 consisting of the immediate replacement implementations at $96,470 and the replacement on failure measures at $10,741.

Energy, Demand, and Cost Savings. The electric energy savings associated with all cost-effective implementations of this ERO are estimated to be 959,892 kWh per year at a cost savings of $48,069 per year. Demand savings are estimated to be 217 kW-mo per year with a cost savings of over $1,108 per year.

Energy or Operations Security. This ERO has no impact on energy or operations security. The recommended motor replacements are one-for-one retrofits that do not inhibit operations or energy supply.

Operation and Maintenance. The impact of this ERO on maintenance is considered to be negligible. Newer, higher efficiency motors should have no increased maintenance costs. In practice they may even require less maintenance.

Environmental Implications. This ERO has no direct environmental impact.

TABLE 2.21. Motor EROs in Research (R&D Building Type) Building 715

Existing Motor Operating Parameters

ID	Existing Equipment			# of Mtrs	Operating Schedule			Energy Consumption			Energy Demand (kW) Sum Monthly Peak Coincident		
	Equip Code	Type of Motor	Rating hp		Hrs On-Peak	Hrs Mid-Peak	Hrs Off-Peak	kWh On-Peak	kWh Mid-Peak	kWh Off-Peak	On-Peak	Mid Peak	Off-Peak
11	cp-15	Cond. pump	15	1	432	432	1,296	6,480	6,480	19,440	NA	NA	NA
14	cwp-1.5	Chill. pump	2	1	432	432	1,296	648	648	1,944	NA	NA	NA
13	cwp-3	Chill. pump	3	1	432	432	1,296	1,296	1,296	3,888	NA	NA	NA
16	ef-1.5	Exh. fan	2	4	432	432	1,296	2,592	2,592	7,776	NA	NA	NA
12	ef-10	Exh. fan	10	1	432	432	1,296	4,320	4,320	12,960	NA	NA	NA
1	ef-2	Exh. fan	2	1	432	432	1,296	864	864	2,592	NA	NA	NA
10	ef-5	Exh. fan	5	1	432	432	1,296	2,160	2,160	6,480	NA	NA	NA
2	sf-5	AHU fan	5	1	432	432	1,296	2,160	2,160	6,480	NA	NA	NA
15	p-7.5	Pump	8	1	432	432	1,296	3,240	3,240	9,720	NA	NA	NA
3	sf-1.5	AHU fan	2	1	432	432	1,296	648	648	1,944	NA	NA	NA
9	sf-10	AHU fan	10	1	432	432	1,296	4,320	4,320	12,960	NA	NA	NA
18	sf-15	AHU fan	15	2	432	432	1,296	12,960	12,960	38,880	NA	NA	NA
8	sf-25	AHU fan	25	1	432	432	1,296	10,800	10,800	32,400	NA	NA	NA
5	sf-7.5	AHU fan	8	1	432	432	1,296	3,240	3,240	9,720	NA	NA	NA

Energy-Efficient Motor Operating Parameters

ID	Energy Resource Opportunity			# of Mtrs	Operating Schedule			Energy Consumption			Energy Demand (kW) Sum Monthly Peak Coincident		
	Equip Code	Type of Motor	Rating hp		Hrs On-Peak	Hrs Mid-Peak	Hrs Off-Peak	kWh On-Peak	kWh Mid-Peak	kWh Off-Peak	On-Peak	Mid Peak	Off-Peak
11	e-cp-15	Cond. Pump	15	1	432	432	1,296	5,204	5,204	15,613	NA	NA	NA
14	e-cwp-1.5	Chill. Pump	2	1	432	432	1,296	561	561	1,684	NA	NA	NA
13	e-cwp-3	Chill. Pump	3	1	432	432	1,296	1,151	1,151	3,452	NA	NA	NA
16	e-ef-1.5	Exh. Fan	2	4	432	432	1,296	2,245	2,245	6,735	NA	NA	NA
12	e-ef-10	Exh. Fan	10	1	432	432	1,296	3,513	3,513	10,539	NA	NA	NA
1	e-ef-2	Exh. Fan	2	1	432	432	1,296	747	747	2,242	NA	NA	NA
10	e-ef-5	Exh. Fan	5	1	432	432	1,296	1,785	1,785	5,354	NA	NA	NA
2	e-sf-5	AHU Fan	5	1	432	432	1,296	1,785	1,785	5,354	NA	NA	NA
15	e-p-7.5	Pump	8	1	432	432	1,296	2,630	2,630	7,891	NA	NA	NA
3	e-sf-1.5	AHU Fan	2	1	432	432	1,296	561	561	1,684	NA	NA	NA
9	e-sf-10	AHU Fan	10	1	432	432	1,296	3,513	3,513	10,539	NA	NA	NA
18	e-sf-15	AHU Fan	15	2	432	432	1,296	10,408	10,408	31,225	NA	NA	NA
8	e-sf-25	AHU Fan	25	1	432	432	1,296	8,568	8,568	25,703	NA	NA	NA
5	e-sf-7.5	AHU Fan	8	1	432	432	1,296	2,630	2,630	7,891	NA	NA	NA

Energy-Efficient Motor ERO Economic Parameters

ID	Economics Parameters						First Year Savings					Life-Cycle Cost		
	First Cost $ RI	First Cost $ ROF	Before O&M $	After O&M $	Life Yr	Salvage $ RI	Energy kWh	Demand kW-mo	Energy $	Demand $	Total $	RI/ ROF	NPV $	Value Index
11	864	NA	0	0	15	NA	6,379	NA	319	NA	319	RI	3,797	3.33
14	NA	182	0	0	15	NA	434	NA	22	NA	22	ROF	119	0.65
13	270	NA	0	0	15	NA	727	NA	36	NA	36	RI	339	1.00
16	0	729	0	0	15	NA	1,738	NA	87	NA	87	ROF	477	0.65
12	451	NA	0	0	15	NA	4,035	NA	202	NA	202	RI	2,235	2.59
1	NA	188	0	0	15	NA	583	NA	29	NA	29	ROF	163	0.89
10	307	NA	0	0	15	NA	1,827	NA	91	NA	91	RI	917	1.72
2	307	NA	0	0	15	NA	1,827	NA	91	NA	91	RI	917	1.72
15	417	NA	0	0	15	NA	3,048	NA	153	NA	153	RI	1,661	2.28
3	NA	182	0	0	15	NA	434	NA	22	NA	22	ROF	119	0.65
9	451	NA	0	0	15	NA	4,035	NA	202	NA	202	RI	2,235	2.59
18	1,328	NA	0	0	15	NA	12,758	NA	639	NA	639	RI	7,584	3.33
8	881	NA	0	0	15	NA	11,162	NA	559	NA	559	RI	8,889	4.33
5	417	NA	0	0	15	NA	3,048	NA	153	NA	153	RI	1,661	2.28

TABLE 2.22. Motor EROs in Plant Building 717 (PLT-BLD Building Type)

Existing Motor Operating Parameters

ID	Existing Equipment			# of Mtrs	Operating Schedule			Energy Consumption			Energy Demand (kW) Sum Monthly Peak Coincident		
	Equip Code	Type of Motor	Rating hp		Hrs On-Peak	Hrs Mid-Peak	Hrs Off-Peak	kWh On-Peak	kWh Mid-Peak	kWh Off-Peak	On-Peak	Mid Peak	Off-Peak
17	sf-40	AHU fan	40	4	432	432	1,296	69,120	69,120	207,360	NA	NA	NA
20	sf-75	AHU fan	75	4	216	216	648	64,800	64,800	194,400	NA	NA	NA
12	p-1	Pump	1	2	432	432	1,296	864	864	2,592	NA	NA	NA
4	p-1.5	Pump	2	2	432	432	1,296	1,296	1,296	3,888	NA	NA	NA
7	p-1.5	Pump	2	4	216	216	648	1,296	1,296	3,888	NA	NA	NA
19	p-10	Pump	10	2	216	216	648	4,320	4,320	12,960	NA	NA	NA
3	p-5	Pump	5	2	432	432	1,296	4,320	4,320	12,960	NA	NA	NA

Energy-Efficient Motor Operating Parameters

ID	Energy Resource Opportunity			# of Mtrs	Operating Schedule			Energy Consumption			Energy Demand (kW) Sum Monthly Peak Coincident		
	Equip Code	Type of Motor	Rating hp		Hrs On-Peak	Hrs Mid-Peak	Hrs Off-Peak	kWh On-Peak	kWh Mid-Peak	kWh Off-Peak	On-Peak	Mid Peak	Off-Peak
17	e-sf-40	AHU Fan	40	4	432	432	1,296	54,399	54,399	163,196	NA	NA	NA
20	e-sf-75	AHU Fan	75	4	216	216	648	51,958	51,958	155,875	NA	NA	NA
12	e-p-1	Pump	1	2	432	432	1,296	755	755	2,264	NA	NA	NA
4	e-p-1.5	Pump	2	2	432	432	1,296	1,122	1,122	3,367	NA	NA	NA
7	e-p-1.5	Pump	2	4	216	216	648	1,122	1,122	3,367	NA	NA	NA
19	e-p-10	Pump	10	2	216	216	648	3,513	3,513	10,539	NA	NA	NA
3	e-p-5	Pump	5	2	432	432	1,296	3,589	3,589	10,768	NA	NA	NA

Energy-Efficient Motor ERO Economic Parameters

ID	Economics Parameters						First Year Savings					Life-Cycle Cost		
	First Cost $ RI	First Cost $ ROF	Before O&M $	After O&M $	Life Yr	Salvage $ RI	Energy kWh	Demand kW-mo	Energy $	Demand $	Total $	RI/ ROF	NPV $	Value Index
17	9,020	NA	0	0	15	NA	73,808	NA	3,686	NA	3,686	RI	50,811	5.51
20	13,733	NA	0	0	15	NA	64,298	NA	3,215	NA	3,215	RI	46,315	4.33
12	0	884	0	0	15	NA	547	NA	27	NA	27	ROF	292	0.52
4	0	871	0	0	15	NA	868	NA	43	NA	43	ROF	421	0.67
7	0	1,343	0	0	15	NA	868	NA	43	NA	43	ROF	244	0.20
19	0	1,865	0	0	15	NA	4,035	NA	202	NA	202	ROF	2,284	1.45
3	1,132	NA	0	0	15	NA	3,653	NA	183	NA	183	RI	2,353	2.20

TABLE 2.23. Motor EROs in Storage Building 719 (STO Building Type)

Existing Motor Operating Parameters

ID	Existing Equipment			# of Mtrs	Operating Schedule			Energy Consumption			Energy Demand (kW) Sum Monthly Peak Coincident		
	Equip Code	Type of Motor	Rating hp		Hrs On-Peak	Hrs Mid-Peak	Hrs Off-Peak	kWh On-Peak	kWh Mid-Peak	kWh Off-Peak	On-Peak	Mid Peak	Off-Peak
12	bf-300	Boost fan	300	2	216	216	648	129,600	129,600	388,800	NA	NA	NA
4	ewp-10	Chill. pump	10	5	173	173	518	8,640	8,640	25,920	NA	NA	NA
8	ewp-75	Chill. pump	75	2	216	216	648	32,400	32,400	97,200	NA	NA	NA
1	ef-80	Exh. fan	80	1	432	432	1,296	25,920	25,920	77,760	NA	NA	NA
7	hwp-15	HTHW pump	15	2	216	216	648	6,480	6,480	19,440	NA	NA	NA
10	af-300	AHU fan	300	1	216	216	648	64,800	64,800	194,400	NA	NA	NA

Energy-Efficient Motor Operating Parameters

ID	Energy Resource Opportunity			# of Mtrs	Operating Schedule			Energy Consumption			Energy Demand (kW) Sum Monthly Peak Coincident		
	Equip Code	Type of Motor	Rating hp		Hrs On-Peak	Hrs Mid-Peak	Hrs Off-Peak	kWh On-Peak	kWh Mid-Peak	kWh Off-Peak	On-Peak	Mid Peak	Off-Peak
12	e-bf-300	Boost Fan	300	2	216	216	648	102,621	102,621	307,862	NA	NA	NA
4	e-ewp-10	Chill. Pump	10	5	173	173	518	7,026	7,026	21,078	NA	NA	NA
8	e-ewp-75	Chill. Pump	75	2	216	216	648	25,979	25,979	77,938	NA	NA	NA
1	e-ef-80	Exh. Fan	80	1	432	432	1,296	20,276	20,276	60,829	NA	NA	NA
7	e-hwp-15	HTHW Pump	15	2	216	216	648	5,204	5,204	15,613	NA	NA	NA
10	e-af-300	AHU Fan	300	1	216	216	648	51,260	51,260	153,781	NA	NA	NA

Energy-Efficient Motor ERO Economic Parameters

ID	Economics Parameters						First Year Savings					Life-Cycle Cost		
	First Cost $ RI	First Cost $ ROF	Before O&M $	After O&M $	Life Yr	Salvage $ RI	Energy kWh	Demand kW-mo	Energy $	Demand $	Total $	RI/ ROF	NPV $	Value Index
12	12,100	NA	0	0	15	NA	135,387	NA	6,769	NA	6,769	RI	79,325	3.35
4	0	1,702	0	3	15	NA	8,070	NA	404	NA	404	ROF	1,330	0.78
8	2,809	NA	0	0	15	NA	32,104	NA	1,605	NA	1,605	RI	19,098	3.67
1	1,379	NA	0	0	15	NA	28,218	NA	1,413	NA	1,413	RI	17,790	5.59
7	1,001	NA	0	0	15	NA	6,378	NA	319	NA	319	RI	2,687	1.13
10	6,050	NA	0	0	15	NA	67,699	NA	3,380	NA	3,380	RI	39,863	3.35

TABLE 2.24. Motor EROs in Communication Building 730 (COMCATN Building Type)

Existing Motor Operating Parameters

ID	Existing Equipment: Equip Code	Type of Motor	Rating hp	# of Mtrs	Operating Schedule: Hrs On-Peak	Hrs Mid-Peak	Hrs Off-Peak	Energy Consumption: kWh On-Peak	kWh Mid-Peak	kWh Off-Peak	Energy Demand (kW) Sum Monthly Peak Coincident: On-Peak	Mid Peak	Off-Peak
18	bf-5	Boost fan	5	1	1,453	1,453	4,360	7,266	7,266	21,798	NA	NA	NA
16	cf-10	Cond. fan	10	1	1,453	1,453	4,360	14,532	14,532	43,596	NA	NA	NA
13	cp-1.5	Cond. pump	2	1	1,453	1,453	4,360	2,180	2,180	6,539	NA	NA	NA
8	cwp-15	Chill. pump	15	1	1,453	1,453	4,360	21,798	21,798	65,394	NA	NA	NA
5	ef-15	Exh. fan	15	1	1,453	1,453	4,360	21,798	21,798	65,394	NA	NA	NA
12	ef-10	AHU fan	10	1	1,752	1,752	5,256	17,520	17,520	52,560	120	NA	NA
11	sf-2	AHU fan	2	2	1,453	1,453	4,360	5,813	5,813	17,438	NA	NA	NA
4	sf-5	AHU fan	5	1	1,453	1,453	4,360	7,266	7,266	21,798	NA	NA	NA
14	sf-5	AHU fan	5	2	756	756	2,268	7,560	7,560	22,680	NA	NA	NA
9	sf-5	AHU fan	5	1	1,453	1,453	4,360	7,266	7,266	21,798	NA	NA	NA
17	sf-7.5	AHU fan	8	1	1,453	1,453	4,360	10,899	10,899	32,697	NA	NA	NA
10	p-1.5	Pump	2	2	1,453	1,453	4,360	4,360	4,360	13,079	NA	NA	NA
8	p-15	Pump	15	1	1,453	1,453	4,360	21,798	21,798	65,394	NA	NA	NA
15	sf-3	AHU fan	3	1	1,453	1,453	4,360	4,360	4,360	13,079	NA	NA	NA
3	sf-50	AHU fan	50	1	1,752	1,752	5,256	87,600	87,600	262,800	600	NA	NA

Energy-Efficient Motor Operating Parameters

ID	Energy Resource Opportunity: Equip Code	Type of Motor	Rating hp	# of Mtrs	Operating Schedule: Hrs On-Peak	Hrs Mid-Peak	Hrs Off-Peak	Energy Consumption: kWh On-Peak	kWh Mid-Peak	kWh Off-Peak	Energy Demand (kW) Sum Monthly Peak Coincident: On-Peak	Mid Peak	Off-Peak
18	e-bf-5	Boost Fan	5	1	1,453	1,453	4,360	6,037	6,037	18,111	NA	NA	NA
16	e-cf-10	Cond. Fan	10	1	1,453	1,453	4,360	11,817	11,817	35,452	NA	NA	NA
13	e-cp-1.5	Cond. Pump	2	1	1,453	1,453	4,360	1,888	1,888	5,664	NA	NA	NA
8	e-cwp-15	Chill. Pump	15	1	1,453	1,453	4,360	17,506	17,506	52,519	NA	NA	NA
5	e-ef-15	Exh. Fan	15	1	1,453	1,453	4,360	17,506	17,506	52,519	NA	NA	NA
12	e-ef-10	AHU Fan	10	1	1,752	1,752	5,256	14,247	14,247	42,742	98	NA	NA
11	e-sf-2	AHU Fan	2	2	1,453	1,453	4,360	5,029	5,029	15,086	NA	NA	NA
4	e-sf-5	AHU Fan	5	1	1,453	1,453	4,360	6,037	6,037	18,111	NA	NA	NA
14	e-sf-5	AHU Fan	5	2	756	756	2,268	6,281	6,281	18,844	NA	NA	NA
9	e-sf-5	AHU Fan	5	1	1,453	1,453	4,360	6,037	6,037	18,111	NA	NA	NA
17	e-sf-7.5	AHU Fan	8	1	1,453	1,453	4,360	8,849	8,849	26,546	NA	NA	NA
10	e-p-1.5	Pump	2	2	1,453	1,453	4,360	3,776	3,776	11,327	NA	NA	NA
3	e-p-15	Pump	15	1	1,453	1,453	4,360	17,506	17,506	52,519	NA	NA	NA
15	e-sf-3	AHU Fan	3	1	1,453	1,453	4,360	3,870	3,870	11,611	NA	NA	NA
3	e-sf-50	AHU Fan	50	1	1,752	1,752	5,256	68,852	68,852	206,556	472	NA	NA

Energy-Efficient Motor ERO Economic Parameters

ID	Economics Parameters: First Cost $ RI	First Cost $ ROF	Before O&M $	After O&M $	Life Yr	Salvage $ RI	First Year Savings: Energy kWh	Demand kW-mo	Energy $	Demand $	Total $	Life-Cycle Cost: RI/ ROF	NPV $	Value Index
18	688	NA	0	0	15	NA	6,145	NA	308	NA	308	RI	4,358	6.15
16	832	NA	0	0	15	NA	13,573	NA	680	NA	680	RI	9,644	11.18
13	336	NA	0	0	15	NA	1,460	NA	73	NA	73	RI	842	2.76
8	1,225	NA	0	0	15	NA	21,458	NA	1,075	NA	1,075	RI	15,487	13.58
5	1,225	NA	0	0	15	NA	21,458	NA	1,075	NA	1,075	RI	15,487	13.58
12	832	NA	0	0	15	NA	18,364	22	919	114	934	RI	13,382	16.48
11	885	NA	0	0	15	NA	3,821	NA	188	NA	188	RI	2,588	3.47
4	688	NA	0	0	15	NA	6,145	NA	308	NA	308	RI	4,358	6.15
14	1,132	NA	0	0	15	NA	6,393	NA	320	NA	320	RI	4,372	4.09
9	688	NA	0	0	15	NA	6,145	NA	308	NA	308	RI	4,358	6.15
17	789	NA	0	0	15	NA	10,252	NA	513	NA	513	RI	7,321	10.06
10	671	NA	0	0	15	NA	2,919	NA	146	NA	146	RI	1,884	2.78
8	1,225	NA	0	0	15	NA	21,458	NA	1,075	NA	1,075	RI	15,487	13.58
15	488	NA	0	0	15	NA	2,447	NA	123	NA	123	RI	1,834	5.40
3	2,837	NA	0	0	15	NA	93,740	128	4,684	655	5,348	RI	77,831	28.90

TABLE 2.25. Motor EROs in Plant Building 734 (PLT-BLD Building Type)

Existing Motor Operating Parameters

ID	Existing Equipment			# of Mtrs	Operating Schedule			Energy Consumption			Energy Demand (kW) Sum Monthly Peak Coincident		
	Equip Code	Type of Motor	Rating hp		Hrs On-Peak	Hrs Mid-Peak	Hrs Off-Peak	kWh On-Peak	kWh Mid-Peak	kWh Off-Peak	On-Peak	Mid Peak	Off-Peak
8	af-40	AHU fan	40	4	324	324	872	51,840	51,840	166,520	NA	NA	NA
5	p-5	Pump	5	2	324	324	872	3,240	3,240	8,720	NA	NA	NA

Energy-Efficient Motor Operating Parameters

ID	Energy Resource Opportunity			# of Mtrs	Operating Schedule			Energy Consumption			Energy Demand (kW) Sum Monthly Peak Coincident		
	Equip Code	Type of Motor	Rating hp		Hrs On-Peak	Hrs Mid-Peak	Hrs Off-Peak	kWh On-Peak	kWh Mid-Peak	kWh Off-Peak	On-Peak	Mid Peak	Off-Peak
8	e-af-40	AHU Fan	40	4	324	324	872	40,788	40,788	122,387	NA	NA	NA
5	e-p-5	Pump	5	2	324	324	872	2,882	2,882	8,078	NA	NA	NA

Energy-Efficient Motor ERO Economic Parameters

ID	Economics Parameters						First Year Savings					Life-Cycle Cost		
	First Cost $ RI	First Cost $ ROF	Before O&M $	After O&M $	Life Yr	Salvage $ RI	Energy kWh	Demand KW-mos	Energy $	Demand $	Total $	RI/ ROF	NPV $	Value Index
8	8,620	NA	0	0	16	NA	56,206	NA	2,786	NA	2,786	RI	37,053	4.03
5	0	1,132	0	0	16	NA	2,740	NA	137	NA	137	ROF	1,889	1.73

TABLE 2.26. Motor EROs in Research Building 738 (R&D Building Type)

Existing Motor Operating Parameters

ID	Existing Equipment			# of Mtrs	Operating Schedule			Energy Consumption			Energy Demand (kW) Sum Monthly Peak Coincident		
	Equip Code	Type of Motor	Rating hp		Hrs On-Peak	Hrs Mid-Peak	Hrs Off-Peak	kWh On-Peak	kWh Mid-Peak	kWh Off-Peak	On-Peak	Mid Peak	Off-Peak
2	ef-10	Cond. fan	10	1	324	324	972	3,240	3,240	9,720	NA	NA	NA
5	ef-1.5	Exh. fan	2	3	324	324	972	1,458	1,458	4,374	NA	NA	NA
4	ef-2	Exh. fan	2	1	324	324	972	648	648	1,944	NA	NA	NA
6	ef-5	Exh. fan	5	1	324	324	972	1,620	1,620	4,860	NA	NA	NA
9	af-10	AHU fan	10	2	324	324	972	6,480	6,480	19,440	NA	NA	NA
1	af-15	AHU fan	15	1	324	324	972	4,860	4,860	14,580	NA	NA	NA
3	af-25	AHU fan	25	1	324	324	972	8,100	8,100	24,300	NA	NA	NA
11	af-7.5	AHU fan	8	1	324	324	972	2,430	2,430	7,290	NA	NA	NA

Energy-Efficient Motor Operating Parameters

ID	Energy Resource Opportunity			# of Mtrs	Operating Schedule			Energy Consumption			Energy Demand (kW) Sum Monthly Peak Coincident		
	Equip Code	Type of Motor	Rating hp		Hrs On-Peak	Hrs Mid-Peak	Hrs Off-Peak	kWh On-Peak	kWh Mid-Peak	kWh Off-Peak	On-Peak	Mid Peak	Off-Peak
2	e-ef-10	Cond. Fan	10	1	324	324	972	2,835	2,835	7,804	NA	NA	NA
5	e-ef-1.5	Exh. Fan	2	3	324	324	972	1,283	1,283	3,788	NA	NA	NA
4	e-ef-2	Exh. Fan	2	1	324	324	972	561	561	1,682	NA	NA	NA
6	e-ef-5	Exh. Fan	5	1	324	324	972	1,348	1,348	4,038	NA	NA	NA
9	e-af-10	AHU Fan	10	2	324	324	972	5,270	5,270	15,809	NA	NA	NA
1	e-af-15	AHU Fan	15	1	324	324	972	3,903	3,903	11,710	NA	NA	NA
3	e-af-25	AHU Fan	25	1	324	324	972	6,428	6,428	18,277	NA	NA	NA
11	e-af-7.5	AHU Fan	8	1	324	324	972	1,873	1,873	5,619	NA	NA	NA

Energy-Efficient Motor ERO Economic Parameters

ID	Economics Parameters						First Year Savings					Life-Cycle Cost		
	First Cost $ RI	First Cost $ ROF	Before O&M $	After O&M $	Life Yr	Salvage $ RI	Energy kWh	Demand kW-mo	Energy $	Demand $	Total $	RI/ ROF	NPV $	Value Index
2	832	NA	0	0	15	NA	3,026	NA	152	NA	152	RI	1,873	2.17
5	0	1,007	0	0	15	NA	876	NA	49	NA	49	ROF	407	0.44
4	NA	347	0	0	15	NA	437	NA	22	NA	22	ROF	188	0.56
6	NA	588	0	0	15	NA	1,370	NA	69	NA	69	ROF	845	1.73
9	1,885	NA	0	0	15	NA	6,052	NA	303	NA	303	RI	3,746	2.17
1	1,225	NA	0	0	15	NA	4,784	NA	240	NA	240	RI	3,182	2.79
3	1,771	NA	0	0	15	NA	8,371	NA	419	NA	419	RI	5,724	3.56
11	788	NA	0	0	15	NA	2,288	NA	114	NA	114	RI	1,452	1.89

TABLE 2.27. Motor EROs in Warehouse Building 945 (WHS Building Type)

Existing Motor Operating Parameters

ID	Existing Equipment			# of Mtrs	Operating Schedule			Energy Consumption			Energy Demand (kW) Sum Monthly Peak Coincident		
	Equip Code	Type of Motor	Rating hp		Hrs On-Peak	Hrs Mid-Peak	Hrs Off-Peak	kWh On-Peak	kWh Mid-Peak	kWh Off-Peak	On-Peak	Mid Peak	Off-Peak
1	hwp-1	HTHW pump	1	1	1,752	1,752	5,256	1,752	1,752	5,256	12	NA	NA
2	p-1.5	Pump	2	1	1,752	1,752	5,256	2,628	2,628	7,884	18	NA	NA
3	af-2	AHU fan	2	1	1,682	1,682	5,046	3,364	3,364	10,092	NA	NA	NA
4	af-20	AHU fan	20	1	722	722	2,167	14,448	14,448	43,344	NA	NA	NA

Energy-Efficient Motor Operating Parameters

ID	Energy Resource Opportunity			# of Mtrs	Operating Schedule			Energy Consumption			Energy Demand (kW) Sum Monthly Peak Coincident		
	Equip Code	Type of Motor	Rating hp		Hrs On-Peak	Hrs Mid-Peak	Hrs Off-Peak	kWh On-Peak	kWh Mid-Peak	kWh Off-Peak	On-Peak	Mid Peak	Off-Peak
1	e-hwp-1	HTHW Pump	1	1	1,752	1,752	5,256	1,530	1,530	4,591	10	NA	NA
2	e-p-1.5	Pump	2	1	1,752	1,752	5,256	2,270	2,270	6,826	16	NA	NA
3	e-af-2	AHU Fan	2	1	1,682	1,682	5,046	2,910	2,910	8,730	NA	NA	NA
4	e-af-20	AHU Fan	20	1	722	722	2,167	11,528	11,528	34,587	NA	NA	NA

Energy-Efficient Motor ERO Economic Parameters

ID	Economics Parameters						First Year Savings					Life-Cycle Cost		
	First Cost $ RI	First Cost $ RGF	Before O&M $	After O&M $	Life Yr	Salvage $ RI	Energy kWh	Demand KW-mos	Energy $	Demand $	Total $	RI/ RGF	NPV $	Value Index
1	277	NA	0	0	15	NA	1,100	2	68	8	83	RI	782	2.63
2	272	NA	0	0	15	NA	1,760	2	88	12	100	RI	1,280	3.76
3	281	NA	0	0	15	NA	2,269	NA	114	NA	114	RI	1,444	3.80
4	1,252	NA	0	0	15	NA	14,595	NA	731	NA	731	RI	10,028	8.87

TABLE 2.28. Motor EROs in Warehouse Building 8401 (WHS Building Type)

Existing Motor Operating Parameters

ID	Existing Equipment			# of Mtrs	Operating Schedule			Energy Consumption			Energy Demand (kW) Sum Monthly Peak Coincident		
	Equip Code	Type of Motor	Rating hp		Hrs On-Peak	Hrs Mid-Peak	Hrs Off-Peak	kWh On-Peak	kWh Mid-Peak	kWh Off-Peak	On-Peak	Mid Peak	Off-Peak
1	ep-25	Cond. pump	25	1	722	722	2,187	18,060	18,060	54,180	NA	NA	NA
5	ep-40	Cond. pump	40	1	722	722	2,187	28,888	28,888	86,888	NA	NA	NA
10	ep-15	Cond. pump	15	1	722	722	2,187	10,836	10,836	32,508	NA	NA	NA
8	ef-3	Cond. fan	3	1	722	722	2,187	2,167	2,167	6,502	NA	NA	NA
7	p-10	Pump	10	1	722	722	2,187	7,224	7,224	21,672	NA	NA	NA
11	ef-1	Exh. fan	1	1	722	722	2,187	722	722	2,167	NA	NA	NA
6	ef-15	Exh. fan	15	1	1,752	1,752	5,258	26,280	26,280	78,840	180	NA	NA
3	ef-5	Exh. fan	5	1	1,752	1,752	5,258	8,760	8,760	26,280	60	NA	NA
2	ef-7.5	Exh. fan	8	1	1,752	1,752	5,258	13,140	13,140	39,420	90	NA	NA
9	ef-20	AHU fan	20	2	722	722	2,187	28,888	28,888	86,888	NA	NA	NA

Energy-Efficient Motor Operating Parameters

ID	Energy Resource Opportunity			# of Mtrs	Operating Schedule			Energy Consumption			Energy Demand (kW) Sum Monthly Peak Coincident		
	Equip Code	Type of Motor	Rating hp		Hrs On-Peak	Hrs Mid-Peak	Hrs Off-Peak	kWh On-Peak	kWh Mid-Peak	kWh Off-Peak	On-Peak	Mid Peak	Off-Peak
1	e-ep-25	Cond. Pump	25	1	722	722	2,187	14,327	14,327	42,881	NA	NA	NA
5	e-ep-40	Cond. Pump	40	1	722	722	2,187	22,742	22,742	68,225	NA	NA	NA
10	e-ep-15	Cond. Pump	15	1	722	722	2,187	8,703	8,703	26,109	NA	NA	NA
8	e-ef-3	Cond. Fan	3	1	722	722	2,187	1,924	1,924	5,772	NA	NA	NA
7	e-p-10	Pump	10	1	722	722	2,187	5,875	5,875	17,624	NA	NA	NA
11	e-ef-1	Exh. Fan	1	1	722	722	2,187	631	631	1,883	NA	NA	NA
6	e-ef-15	Exh. Fan	15	1	1,752	1,752	5,258	21,108	21,108	63,318	146	NA	NA
3	e-ef-5	Exh. Fan	5	1	1,752	1,752	5,258	7,278	7,278	21,835	50	NA	NA
2	e-ef-7.5	Exh. Fan	8	1	1,752	1,752	5,258	10,688	10,688	32,004	73	NA	NA
9	e-ef-20	AHU Fan	20	2	722	722	2,187	23,058	23,058	69,174	NA	NA	NA

Energy-Efficient Motor ERO Economic Parameters

ID	Economics Parameters						First Year Savings					Life-Cycle Cost		
	First Cost $ RI	First Cost $ ROF	Before O&M $	After O&M $	Life Yr	Salvage $ RI	Energy kWh	Demand kW-mo	Energy $	Demand $	Total $	RI/ ROF	NPV $	Value Index
1	1,771	NA	0	0	15	NA	18,886	NA	836	NA	836	RI	13,308	8.27
5	2,266	NA	0	0	15	NA	30,772	NA	1,641	NA	1,641	RI	21,767	8.48
10	1,226	NA	0	0	15	NA	10,887	NA	534	NA	534	RI	7,517	6.80
8	488	NA	0	0	15	NA	1,218	NA	61	NA	61	RI	827	2.73
7	832	NA	0	0	15	NA	8,747	NA	338	NA	338	RI	4,815	5.34
11	NA	342	0	0	15	NA	457	NA	23	NA	23	ROF	273	0.87
6	1,226	NA	0	0	15	NA	25,870	35	1,285	181	1,476	RI	21,377	18.77
3	688	NA	0	0	15	NA	7,488	10	371	52	423	RI	6,050	11.32
2	788	NA	0	0	15	NA	12,380	17	618	88	705	RI	10,145	13.84
9	3,086	NA	0	0	15	NA	28,180	NA	1,482	NA	1,482	RI	20,843	7.17

Notes (for Section 2.5 Tables):

Equipment Code	Desciption
bf-300	Booster Fan - 300 hp
bf-5	Booster Fan - 5 hp
cf-10	Condensate Fan - 10 hp
cf-3	Condensate Fan - 3 hp
cp-40	Condensate Pump - 40 hp
cp-25	Condensate Pump - 25 hp
cp-15	Condensate Pump - 15 hp
cp-1.5	Condensate Pump - 1.5 hp
cwp-75	Chilled Water Pump - 75 hp
cwp-15	Chilled Water Pump - 15 hp
cwp-10	Chilled Water Pump - 10 hp
cwp-3	Chilled Water Pump - 3 hp
cwp-1.5	Chilled Water Pump - 1.5 hp
ef-60	Exhaust Fan - 60 hp
ef-15	Exhaust Fan - 15 hp
ef-10	Exhaust Fan - 10 hp
ef-7.5	Exhaust Fan - 7.5 hp
ef-5	Exhaust Fan - 5 hp
ef-2	Exhaust Fan - 2 hp
ef-1.5	Exhaust Fan - 1.5 hp
ef-1	Exhaust Fan - 1 hp
hwp-15	Hot Water Pump - 15 hp
hwp-1	Hot Water Pump - 1 hp
p-15	Pump - 15 hp
p-10	Pump - 10 hp
p-7.5	Pump - 7.5 hp
p-5	Pump - 5 hp
p-1.5	Pump - 1.5 hp
p-1	Pump - 1 hp
sf-300	Air Handling Fan - 300 hp
sf-75	Air Handling Fan - 75 hp
sf-50	Air Handling Fan - 50 hp
sf-40	Air Handling Fan - 40 hp
sf-25	Air Handling Fan - 25 hp
sf-20	Air Handling Fan - 20 hp
sf-15	Air Handling Fan - 15 hp
sf-10	Air Handling Fan - 10 hp
sf-7.5	Air Handling Fan - 7.5 hp
sf-5	Air Handling Fan - 5 hp
sf-3	Air Handling Fan - 3 hp
sf-2	Air Handling Fan - 2 hp
sf-1.5	Air Handling Fan - 1.5 hp

An "e-" prefix denotes energy efficient motor of same size

2.6 SEWAGE LIFT STATION MOTORS

All sewage lift station motors over 1 hp are included in this analysis. The ERO option analyzed was the replacement of the existing motors with high-efficiency models. The option of replacement with energy efficient models was evaluated on both a replace immediately and a replace-on-failure schedule. Data on the lift stations were developed based on equipment listings, and contact with site personnel.

Description

The energy-efficient motor retrofit involves replacing the existing lift station pump motors with energy-efficient motors. The percent efficiency improvement over a new standard motor is a decreasing function of motor size. The improvement is about 5 percent for a 5 hp motor and 4 percent for a 25 hp motor.

Assumptions

The performance analysis is based on the following data and technical assumptions specific to this ERO:

- Fifteen-months (January 1991 through March 1992) of operation logs were available. The average annual kWh is based on the average kW for a typical year.
- The distribution of the percent time on-peak and off-peak for the lift station motors is assumed to be identical to VAFB's on-post electrical energy use breakdown as a whole.

The economic analysis is based on the following cost data and assumptions:

- The maintenance cost difference between standard and energy-efficient motors is negligible.
- The salvage value of a motor is negligible.
- Motor costs are based on published standard- and energy-efficient motor costs. (ACEEE 1991)
- The labor costs associated with immediate replacement are as follows: $132 for motors of 10 hp and less, $221 for 15 to 30 hp motors, $363 for 40 to 75 hp motors, $856 for motors over 75 hp.

- The motor service life is 15 years.

Results

Quantitative results, presented in Table 2.29, are discussed below. The table includes only those motors that are considered life cycle cost effective to replace.

Budget Implications. The first cost for this replace on failure retrofit option is $2,996.

Energy, Demand, and Cost Savings. The electric energy savings are estimated to be 5,471 kWh per year at a cost savings of $274 per year. Demand savings are estimated to be negligible.

Energy Security. This ERO has no direct impact on energy security.

Operation and Maintenance. There will be no significant additional maintenance requirement.

Environmental Issues. This ERO has no direct environmental impact.

TABLE 2.29. Motor EROs in Sewage Lift Stations: Energy-Efficient Motors

Existing Motor Operating Parameters

ID	Existing Equipment			# of Mtrs	Operating Schedule			Energy Consumption			Energy Demand (kW) Sum Monthly Peak Coincident		
	Equip Code	Type of Motor	Rating hp		Hrs On-Peak	Hrs Mid-Peak	Hrs Off-Peak	kWh On-Peak	kWh Mid-Peak	kWh Off-Peak	On-Peak	Mid Peak	Off-Peak
2	lp-25	Lift Pump	25	1	138	138	414	3,447	3,447	10,340	NA	NA	NA
1	lp-15	Lift Pump	15	1	138	138	414	2,068	2,068	6,204	NA	NA	NA

Energy-Efficient Motor Operating Parameters

ID	Energy Resource Opportunity			# of Mtrs	Operating Schedule			Energy Consumption			Energy Demand (kW) Sum Monthly Peak Coincident		
	Equip Code	Type of Motor	Rating hp		Hrs On-Peak	Hrs Mid-Peak	Hrs Off-Peak	kWh On-Peak	kWh Mid-Peak	kWh Off-Peak	On-Peak	Mid Peak	Off-Peak
2	e-lp-25	Lift Pump	25	1	138	138	414	2,750	2,750	8,250	NA	NA	NA
1	e-lp-15	Lift Pump	15	1	138	138	414	1,870	1,870	5,011	NA	NA	NA

Energy-Efficient Motor ERO Economic Parameters

ID	Economics Parameters						First Year Savings					Life-Cycle Cost		
	First Cost $ RI	First Cost $ ROF	Before O&M $	After O&M $	Life Yr	Salvage $ RI	Energy kWh	Demand kW-mo	Energy $	Demand $	Total $	RI/ ROF	NPV $	Value Index
2	NA	1,771	0	0	15	NA	3,483	NA	174	NA	174	ROF	2,188	1.47
1	NA	1,225	0	0	15	NA	1,988	NA	100	NA	100	ROF	1,177	1.13

Notes (for Section 2.6 Tables):

Equipment Code	Description
lp-25	Sewage Lift Pump - 25 hp
lp-15	Sewage Lift Pump - 15 hp

An "e-" prefix denotes energy efficient motor of same size

2.7 WATER WELL AND BOOSTER PUMP MOTORS

This analysis considered a primary efficiency option which involves the replacement of a single-speed standard-efficiency motor with a high-efficiency model. All well pump motors and booster pump motors are included in this analysis. There are nine well pumps and fourteen booster pumps at VAFB. The replacement of currently installed standard efficiency motors with high-efficiency models was evaluated on both a replace-immediately and replace-on-failure basis.

An inventory of motors was developed based on equipment listings, and contact with site personnel. In addition, sizes, functions, and quantities were catalogued during site visits to VAFB. From this information a total motor equipment characterization was derived.

Description

The energy-efficient motor retrofit involves replacing the existing well pump motors and booster pump motors with energy-efficient motors. The percent efficiency improvement over a new standard motor is a decreasing function of motor size. The well pumps and booster pumps are very large, mainly in the range of 60 hp up to 400 hp. The improvement for these sizes of motors is small, between 1 percent and 2 percent.

Assumptions

The performance analysis is based on the following data and technical assumptions specific to this ERO:

- Fifteen-months (January 1991 through March 1992) of operation logs were available. The average annual kWh is based on the average kW for a typical year.
- The distribution of the percent time on-peak and off-peak for the well and booster pump motors is assumed to be identical to Vandenberg Air Force Base's on-post electrical energy use breakdown as a whole.

The economic analysis is based on the following cost data and assumptions:

- The maintenance cost difference between standard and energy-efficient motors is negligible.

- The salvage value of a motor is negligible.
- Available standard- and energy-efficient motor costs. (ACEEE 1991)
- The labor costs associated with immediate replacement are as follows: $363 for 60 and 75 hp motors, and $856 for motors over 75 hp.
- The motor service life is 15 years.

Results

Quantitative results, presented in Table 2.30, are discussed below.

Budget Implications. The first cost of all cost-effective energy-efficient motor retrofits is $132,652 consisting of the immediate replacement implementations at $92,193 and the replacement on failure measures at $40,459.

Energy, Demand, and Cost Savings. The electric energy savings are estimated to be 936,881 kWh per year at a cost savings of $46,917 per year. Demand savings are estimated to be negligible.

Energy Security. This ERO has no direct impact on energy security.

Operation and Maintenance. There will be no significant additional maintenance requirement.

Environmental Issues. This ERO has no direct environmental impact.

TABLE 2.30. Motor EROs in Water Wells and Booster Stations

Existing Motor Operating Parameters

ID	Existing Equipment: Equip Code	Type of Motor	Rating hp	# of Mtrs	Operating Schedule: Hrs On-Peak	Hrs Mid-Peak	Hrs Off-Peak	Energy Consumption: kWh On-Peak	kWh Mid-Peak	kWh Off-Peak	Energy Demand (kW) Sum Monthly Peak Coincident: On-Peak	Mid Peak	Off-Peak
14	bp-400	Boost pump	400	1	51	51	153	20,407	20,407	61,222	NA	NA	NA
13	bp-150	Boost pump	150	4	514	514	1,542	308,422	308,422	925,265	NA	NA	NA
9	bp-100	Boost pump	100	4	257	257	771	102,847	102,847	308,541	NA	NA	NA
5	bp-80	Boost pump	80	2	290	290	870	34,783	34,783	104,349	NA	NA	NA
3	bp-250	Boost pump	250	1	62	62	186	15,528	15,528	46,584	NA	NA	NA
2	bp-250	Boost pump	250	2	93	93	280	46,584	46,584	139,753	NA	NA	NA
8	wp-75	Well pump	75	1	862	862	2,587	64,686	64,686	194,058	NA	NA	NA
7	wp-75	Well pump	75	1	948	948	2,845	71,136	71,136	213,408	NA	NA	NA
4	wp-80	Well pump	80	1	921	921	2,763	55,268	55,268	165,804	NA	NA	NA
6	wp-75	Well pump	75	1	1,723	1,723	5,170	129,262	129,262	387,785	NA	NA	NA
8	wp-100	Well pump	100	1	164	164	491	16,379	16,379	49,137	NA	NA	NA
2	wp-80	Well pump	80	1	338	338	1,013	20,253	20,253	60,759	NA	NA	NA
3	wp-75	Well pump	75	1	0	0	0	4	4	12	NA	NA	NA
9	wp-100	Well pump	100	1	178	178	534	17,790	17,790	53,370	NA	NA	NA
1	wp-75	Well pump	75	1	239	239	716	17,890	17,890	53,671	NA	NA	NA

Energy-Efficient Motor Operating Parameters

ID	Energy Resource Opportunity: Equip Code	Type of Motor	Rating hp	# of Mtrs	Operating Schedule: Hrs On-Peak	Hrs Mid-Peak	Hrs Off-Peak	Energy Consumption: kWh On-Peak	kWh Mid-Peak	kWh Off-Peak	Energy Demand (kW) Sum Monthly Peak Coincident: On-Peak	Mid Peak	Off-Peak
14	e-bp-400	Boost Pump	400	1	51	51	153	16,271	16,271	48,812	NA	NA	NA
13	e-bp-150	Boost Pump	150	4	514	514	1,542	241,331	241,331	723,994	NA	NA	NA
9	e-bp-100	Boost Pump	100	4	257	257	771	80,377	80,377	241,131	NA	NA	NA
5	e-bp-80	Boost Pump	80	2	290	290	870	31,015	31,015	93,046	NA	NA	NA
3	e-bp-250	Boost Pump	250	1	62	62	186	13,979	13,979	41,937	NA	NA	NA
2	e-bp-250	Boost Pump	250	2	93	93	280	41,937	41,937	125,810	NA	NA	NA
8	e-wp-75	Well Pump	75	1	862	862	2,587	50,854	50,854	152,561	NA	NA	NA
7	e-wp-75	Well Pump	75	1	948	948	2,845	55,925	55,925	167,774	NA	NA	NA
4	e-wp-80	Well Pump	80	1	921	921	2,763	43,484	43,484	130,452	NA	NA	NA
6	e-wp-75	Well Pump	75	1	1,723	1,723	5,170	101,921	101,921	304,863	NA	NA	NA
8	e-wp-100	Well Pump	100	1	164	164	491	12,800	12,800	38,401	NA	NA	NA
2	e-wp-80	Well Pump	80	1	338	338	1,013	15,935	15,935	47,804	NA	NA	NA
3	e-wp-75	Well Pump	75	1	0	0	0	3	3	10	NA	NA	NA
9	e-wp-100	Well Pump	100	1	178	178	534	13,903	13,903	41,710	NA	NA	NA
1	e-wp-75	Well Pump	75	1	239	239	716	14,428	14,428	43,283	NA	NA	NA

Energy-Efficient Motor ERO Economic Parameters

ID	Economics Parameters: First Cost $ RI	First Cost $ ROF	Before O&M $	After O&M $	Life Yr	Salvage $ RI	First Year Savings: Energy kWh	Demand kW-mo	Energy $	Demand $	Total $	Life-Cycle Cost: RI/ ROF	NPV $	Value Index
14	NA	17,135	0	0	15	NA	20,882	NA	1,036	NA	1,036	ROF	11,836	0.82
13	38,045	NA	0	0	15	NA	335,451	NA	16,799	NA	16,799	RI	238,921	7.42
9	21,148	NA	0	0	15	NA	112,349	NA	5,628	NA	5,628	RI	77,574	4.05
5	5,452	NA	0	0	15	NA	18,837	NA	943	NA	943	RI	10,574	1.86
3	NA	6,879	0	0	15	NA	7,748	NA	388	NA	388	ROF	2,933	0.44
2	0	13,859	0	0	15	NA	23,238	NA	1,164	NA	1,164	ROF	10,195	0.78
8	3,433	NA	0	0	15	NA	69,161	NA	3,463	NA	3,463	RI	48,343	11.00
7	3,433	NA	0	0	15	NA	76,058	NA	3,809	NA	3,809	RI	53,425	12.15
4	3,370	NA	0	0	15	NA	58,921	NA	2,951	NA	2,951	RI	42,405	13.33
6	3,433	NA	0	0	15	NA	138,204	NA	6,921	NA	6,921	RI	98,216	22.57
8	5,287	NA	0	0	15	NA	17,892	NA	896	NA	896	RI	11,882	2.48
2	2,728	NA	0	0	15	NA	21,591	NA	1,081	NA	1,081	RI	14,256	4.48
3	NA	2,388	0	0	15	NA	4	NA	0	NA	0	ROF	86	0.04
9	5,287	NA	0	0	15	NA	19,434	NA	973	NA	973	RI	13,017	2.72
1	2,577	NA	0	0	15	NA	17,313	NA	867	NA	867	RI	11,652	4.35

Notes (for Section 2.7 Tables):

Equipment Code	Description
bp-400	Well Water Booster Pump - 400 hp
bp-250	Well Water Booster Pump - 250 hp
bp-150	Well Water Booster Pump - 150 hp
bp-100	Well Water Booster Pump - 100 hp
bp-60	Well Water Booster Pump - 60 hp
wp-100	Well Pump - 100 hp
wp-75	Well Pump - 75 hp
wp-60	Well Pump - 60 hp

An "e-" prefix denotes energy efficient motor of same size

2.8 PACKAGED SEWAGE SYSTEM PUMP MOTORS

All packaged sewage system pump motors are included in this analysis. There are sixteen sewage system stations at VAFB. The pump motors at these stations run 24 hours a day annually. An inventory of motors larger than 1 hp was developed based on equipment listing, and contact with site personnel. This initial analysis considered the replacement of the motors with high-efficiency models as well as 2-speed motors. Both of these options were evaluated on both a replace-immediately and replace-on-failure basis. The analysis indicated that replacement of the motors with 2-speed technology was the most life-cycle-cost-effective option. This section describes the analysis and results of the 2-speed option.

Description

The two-speed motor retrofit involves replacing the existing motor with a two-speed motor and adding a level switch to the existing three- or four-level control system.

Assumptions

The performance analysis is based on the following data and technical assumptions specific to this ERO:

- Fifteen-months (January 1991 through March 1992) of operation logs were available. The average annual kWh is based on the average kW for a typical year.
- The distribution of the percent time on-peak and off-peak for the sewage lift station motors is considered to be identical to the base energy use breakdown as a whole.
- Two-speed motor operation is at high speed 10 percent and at low speed 90 percent of its total operating time.
- The head developed by the existing pump is due half to turbulent pipe friction loss and half to static head.

The economic analysis is based on the following cost data and assumptions:

- The maintenance cost difference between standard and high efficiency is negligible.

- The salvage value of the motor is negligible.
- The installed cost of a two-speed motor controller is $100. The cost of a two-speed motor is $200 plus $15 per hp.
- The labor costs associated with replacing immediately are as follows: $132 for motors of 10 hp and less, $221 for 15 hp to 30 hp motors, $363 for 40 hp to 75 hp motors, $856 for motors over 75 hp.
- The service life of a pump motor is 15 years.

Results

Quantitative results of the ERO analysis are presented in Table 2.31. The results are discussed below.

Budget Implications. The first cost of all cost-effective 2-speed sewage station motor retrofits is $6,516.

Energy, Demand, and Cost Savings. The electric energy savings associated with all cost-effective implementations of this ERO are estimated to be 163,806 kWh per year at a cost savings of $7,084 per year. Demand savings are negligible, amounting to about 2 kW per year with a cost savings of $11 per year.

Energy Security. This ERO has no direct impact on energy security.

Operation and Maintenance. There will be, on the average, slightly more maintenance associated with the additional control circuit elements. Backup pump failures will generally occur less frequently while lead pump failures will occur correspondingly more frequently, resulting in a negligible increase in motor maintenance.

Environmental Issues. This ERO has no direct environmental impact.

TABLE 2.31. Motor EROs in Packaged Sewage Systems

Existing Motor Operating Parameters

ID	Existing Equipment: Equip Code	Type of Motor	Rating hp	# of Mtrs	Operating Schedule: Hrs On-Peak	Hrs Mid-Peak	Hrs Off-Peak	Energy Consumption: kWh On-Peak	kWh Mid-Peak	kWh Off-Peak	Energy Demand (kW) Sum Monthly Peak Coincident: On-Peak	Mid Peak	Off-Peak
2	sp-5	Sewage Pump	5	2	1,742	1,742	5,226	17,419	17,419	52,258	119	NA	NA
4	sp-3	Sewage Pump	3	2	1,742	1,742	5,226	10,451	10,451	31,354	72	NA	NA
5	sp-1.33	Sewage Pump	1	1	1,742	1,742	5,226	2,317	2,317	6,950	16	NA	NA
6	sp-2	Sewage Pump	2	1	1,742	1,742	5,226	3,484	3,484	10,452	24	NA	NA
8	sp-7.5	Sewage Pump	8	2	1,742	1,742	5,226	26,129	26,129	78,387	179	NA	NA
12	sp-1.5	Sewage Pump	2	1	1,742	1,742	5,226	2,613	2,613	7,838	18	NA	NA
16	sp-3	Sewage Pump	3	5	1,742	1,742	5,226	26,129	26,129	78,388	179	NA	NA
13	sp-1	Sewage Pump	1	1	1,742	1,742	5,226	1,742	1,742	5,226	12	NA	NA
14	sp-2	Sewage Pump	2	1	1,742	1,742	5,226	3,484	3,484	10,451	24	NA	NA

Two-Speed Motor Operating Parameters

ID	Energy Resource Opportunity: Equip Code	Type of Motor	Rating hp	# of Mtrs	Operating Schedule: Hrs On-Peak	Hrs Mid-Peak	Hrs Off-Peak	Energy Consumption: kWh On-Peak	kWh Mid-Peak	kWh Off-Peak	Energy Demand (kW) Sum Monthly Peak Coincident: On-Peak	Mid Peak	Off-Peak
2	2-sp-5	Sewage Pump	5	2	1,742	1,742	5,226	17,443	17,443	22,448	119	NA	NA
4	2-sp-3	Sewage Pump	3	2	1,742	1,742	5,226	10,812	10,812	13,897	74	NA	NA
5	2-sp-1.33	Sewage Pump	1	1	1,742	1,742	5,226	2,483	2,483	3,206	17	NA	NA
6	2-sp-2	Sewage Pump	2	1	1,742	1,742	5,226	3,696	3,696	4,750	25	NA	NA
8	2-sp-7.5	Sewage Pump	8	2	1,742	1,742	5,226	24,184	24,184	27,028	166	NA	NA
12	2-sp-1.5	Sewage Pump	2	1	1,742	1,742	5,226	2,812	2,812	3,615	18	NA	NA
16	2-sp-3	Sewage Pump	3	5	1,742	1,742	5,226	27,030	27,030	34,743	185	NA	NA
13	2-sp-1	Sewage Pump	1	1	1,742	1,742	5,226	1,902	1,902	2,448	13	NA	NA
14	2-sp-2	Sewage Pump	2	1	1,742	1,742	5,226	3,696	3,696	4,750	25	NA	NA

Two-Speed Motor ERO Economic Parameters

ID	Economics Parameters: First Cost $ RI	First Cost $ ROF	Before O&M $	After O&M $	Life Yr	Salvage $ RI	First Year Savings: Energy kWh	Demand kW-mo	Energy $	Demand $	Total $	Life-Cycle Cost: RI/ ROF	NPV $	Value Index
2	818	NA	0	0	15	NA	28,785	(0)	1,288	(1)	1,287	RI	17,606	10.78
4	494	NA	0	0	15	NA	16,736	(2)	713	(13)	700	RI	8,882	8.31
5	347	NA	0	0	15	NA	3,382	(1)	141	(6)	135	RI	1,560	2.78
6	241	NA	0	0	15	NA	5,278	(1)	221	(7)	214	RI	2,618	4.87
8	1,988	NA	0	0	15	NA	55,230	13	2,458	68	2,525	RI	35,108	15.51
12	338	NA	0	0	15	NA	3,825	(1)	159	(7)	152	RI	1,886	3.83
16	2,488	NA	0	0	15	NA	41,843	(8)	1,782	(31)	1,750	RI	23,413	8.87
13	277	NA	0	0	15	NA	2,480	(1)	101	(6)	96	RI	1,038	2.22
14	347	NA	0	0	15	NA	5,277	(1)	221	(7)	214	RI	2,724	4.86

Notes (for Section 2.8 Tables):

Equipment Code	Description
sp-7.5	Sewage Pump - 7.5 hp
sp-5	Sewage Pump - 5 hp
sp-3	Sewage Pump - 3 hp
sp-2	Sewage Pump - 2 hp
sp-1.5	Sewage Pump - 1.5 hp
sp-1.33	Sewage Pump - 1.33 hp
sp-1	Sewage Pump - 1 hp

A "2-" prefix indicates two speed motor with similar maximum size

2.9 TRANSMISSION AND DISTRIBUTION

Even with efficiencies near 95%, distribution transformers represent the largest component of transmission and distribution (T&D) system energy consumption. Thus, the reduction of transformer loss is the primary energy resource opportunity in this section. A secondary ERO, conservation voltage reduction (CVR), is briefly described at the end of this section.

2.9.1 Transformer Energy Resource Opportunities

As described in Volume 2: Baseline Detail (Halverson et al. 1993), transformer loss consists of both load and no-load loss. Load loss results when the electrical current creates resistive heating in the transformer windings. This loss varies as a function of the load or current squared (an I^2R relationship where I is current and R is resistance). No-load loss develop in the core of the transformer, caused by induced current in the metallic core material. This loss is a function of transformer voltage, and thus is not a function of the power system load. Because transformer capacity at VAFB is currently being underutilized, the average transformer loads are much lower than the average capacities. This results in relatively small load loss, with the no-load loss becoming dominant. Therefore, the transformer energy consumption will not be affected greatly as a result of other ERO implementation throughout VAFB.

In order to reduce the transformer energy consumption, a total of eight transformer EROs were considered. The eight options include both replace-immediately and replace-on-failure implementation options of four basic EROs:

Reducing only no-load transformer losses:

- Replace transformers with amorphous core transformers.
- Replace transformers with improved silicon steel core transformers.

Reducing both no-load and load transformer losses:

- Replace transformers with amorphous core transformers and improved winding efficiency.
- Replace transformers with improved silicon steel core transformers and improved winding efficiency.

The tradeoff of efficiency and cost is a major factor in the specification and construction of transformers. Transformers can be built at several efficiency levels for a given capacity size. Typical transformer losses, which are representative of conventional transformer technology, are given in Volume 1 for transformer sizes found at VAFB.

Amorphous steel transformer cores are a relatively recent development. Transformer no-load losses can be reduced by about 70% when amorphous steel is used for the transformer core. However, the amorphous steel is more expensive than conventional transformer core silicon steel, increasing the cost of a typical distribution transformer by about 40% (Brooks et al. 1986). As amorphous core transformers are typically smaller than 1,000 kVA, this analysis only considered the amorphous core option for transformers less than 1,000 kVA capacity.

Using improved silicon steel for transformer cores is another method of reducing transformer no-load loss. This can result in no-load loss reduction of about 25% with a corresponding increase in transformer cost of 20%, as compared to a conventional transformer (Brooks et al. 1986).

Both of the technologies described above affect only the no-load loss through the use of improved core materials. However, load loss reduction is also possible by using more winding material to reduce the resistance and hence the load loss of the transformer. For both of the above technologies, it is assumed that the load loss can be reduced by 20% with a 10% increase in the capital cost as compared to a conventional transformer. This assumption is based on transformer manufacturer technical data (Westinghouse Electric Corporation 1981).

Cost Estimation

Because transformers can be specified and manufactured in many different configurations, obtaining costs that can be widely applied is difficult. For example, the transformer efficiency and cost for a particular size of transformer is usually optimized for the customer's specific energy cost by a specific vendor to minimize the total life-cycle cost. In order to estimate transformer costs, the 1992 Means Electrical Cost Data sourcebook was used

(Means 1991). Means is often used by contractors to estimate initial cost of technologies used in projects. Used in the context of this analysis, it is a useful cost estimator for contractor-installed projects, because major transformer retrofit work would likely be performed by a contractor.

Means data is separated into material and labor cost measures. The material cost is the initial transformer cost, while the labor cost includes the labor, installation equipment, and contractor overhead and profit. Transformer costs as a function of capacity and voltage were extracted from Means and are presented as Figures 2.1 and 2.2.

Material cost for the large transformers at VAFB (greater than 750 kVA) are given in Table 2.32. These costs were estimated using a transformer price list (Westinghouse Electric Corporation 1987) and adjusted to 1992 dollars using Means historical cost data.

The Means data shown in these two figures was used to create scaling relationships between transformer capacity and cost. The material cost data was separated into two categories: transformers with capacity less than or equal to 100 kVA, and transformers with capacity greater than 100 kVA and less than 750 kVA. A curve fit of the data was performed for each, with the resulting equations used to estimate the cost of all transformers within that category.

For transformers rated under 100 kVA, data for dry-type units with voltage rating of 240/480-120/208 volts was used to develop Equation 2.1. A scaling factor of 1.2 was included to adjust the cost of the transformer for distribution voltage, estimated from the relationship of cost and voltage shown in Figure 2.1.

$$\text{Transformer Material Cost (1992 \$)} = 175\ S^{0.608} \qquad (2.1)$$

where S = Transformer capacity (kVA) for $0 < S \leq 100$

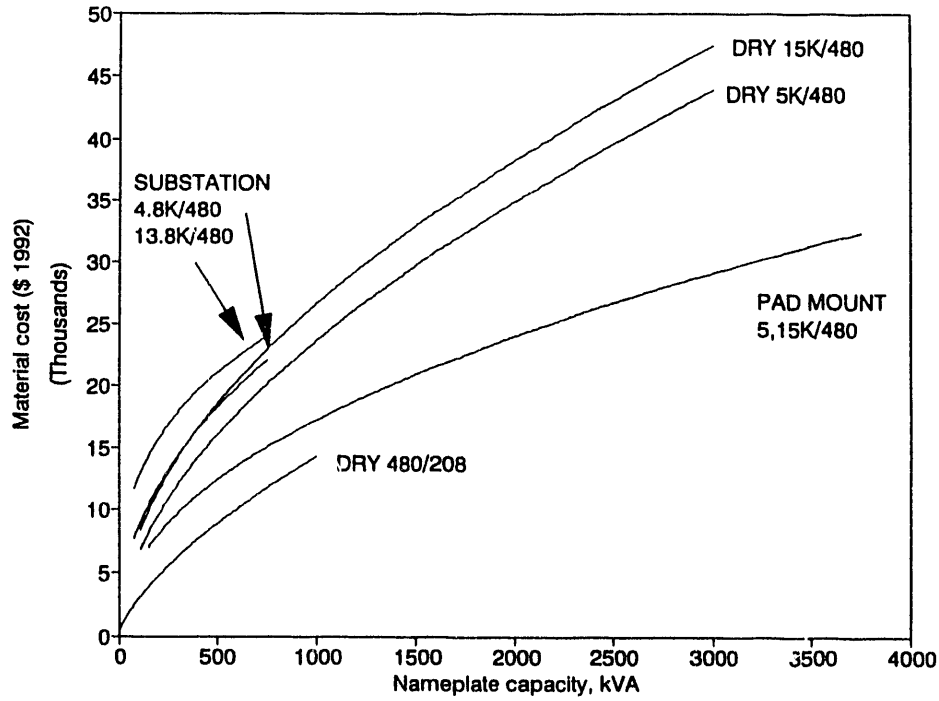

FIGURE 2.1. Means Transformer Material Cost

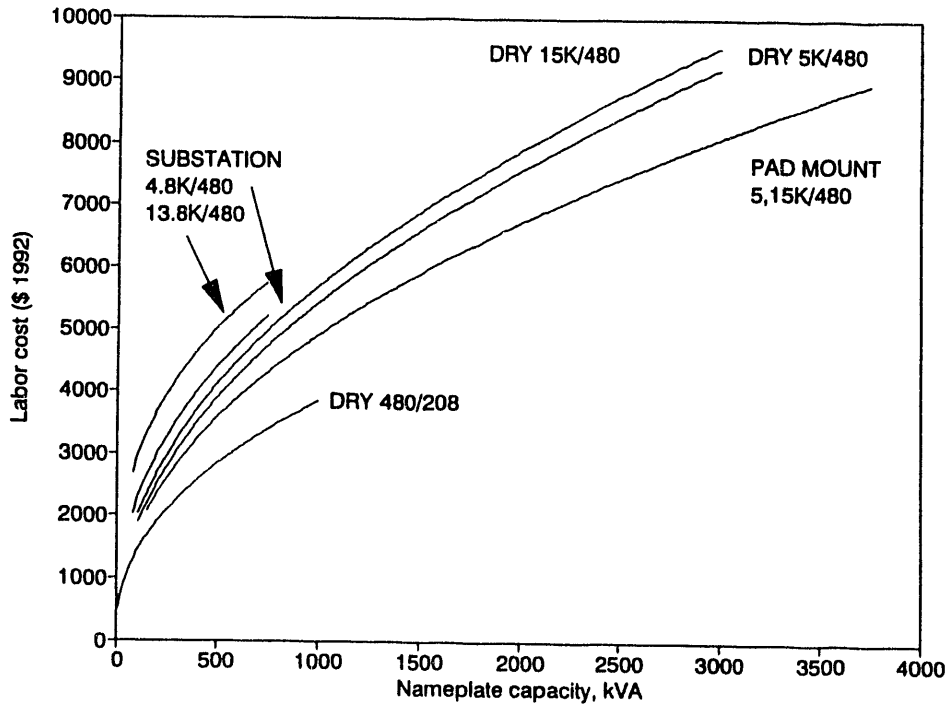

FIGURE 2.2. Means Transformer Labor Cost

TABLE 2.32. Large Transformer Hardware Cost

Primary (volts)	Secondary (volts)	Capacity (kVA)	Cost ($ 1992)
69,000	12,000	2500	44,033
		3750	48,677
		7500	76,686
		10000	92,373
69,000	4160	3750	47,732
12,000	4160	2000	23,409
		5000	38,343
12,000	2400	750	16,406
		1000	17,528
12,000	480	750	16,243
		1000	17,354
		1500	19,579
		2000	22,948
		2500	25,346
12,000	208	750	17,055
		1000	18,743
4160	480	750	15,529
		1500	20,068

For transformer sizes between 100 kVA and 750 kVA, the curve fit used the pad mount 5,15 kV voltage category data to develop Equation 2.2.

$$\text{Transformer Material Cost (1992 \$)} = 639\ S^{0.477} \qquad (2.2)$$

where S = Transformer capacity (kVA) for $100 < S < 750$

All transformers have similar labor installation costs regardless of transformer capacity and were combined into a single equation given below.

$$\text{Labor Installation Cost (1992 \$)} = 209\ S^{0.457} \qquad (2.3)$$

where S = Transformer capacity (kVA)

Finally, costs were adjusted by the Means City Cost Index, which account for differences in material cost and labor rates for various parts of the country with respect to a national average. For Santa Barbara, California, (the closest city to VAFB), the material cost index is 0.988 and the labor cost index is 1.133.

While the old transformers being removed have some salvage value, this analysis assumes the benefit will be approximately equal to the labor demol.- tion and disposal costs and could be subsequently ignored.

Annual Energy Savings

The rate schedule used in this analysis to calculate annual energy and demand charge savings is given in Table 2.33.

The annual savings of the various transformer EROs considered are calculated in a three-step process. First, the peak power demand reduction is calculated and multiplied by the monthly demand charges over the year. Second, the no-load loss reduction is multiplied by the weighted average of energy cost. Finally, the load-loss reduction is computed as described below.

TABLE 2.33. Pacific Gas and Electric Rate Schedule E-20: Electric Service to Customers with Maximum Demand of 1,000 kW or More, Effective January 1, 1992

	Summer	Winter
Energy Rates ($/kWh)		
Peak	0.08485	N/A
Partial Peak	0.05759	0.04924
Off Peak	0.04397	0.04265
Demand Charge ($/kW)		
Maximum Peak-Period	9.00	N/A
Non Peak-Period Maximum	0.60	0.60
Definition of Time Periods		
Season	May 1-Oct. 31	Nov. 1-Apr. 30
Peak	noon-6pm M-F	N/A
Partial Peak	8:30am-noon & 6pm-9:30pm M-F	8:30am-9:30pm M-F
Off Peak	9:30pm-8:30am M-F Sat, Sun, Holidays	9:30pm-8:30pm M-F Sat, Sun, Holidays

Since the load-loss varies as a function of the square of the load, and different energy rates apply based on time-of-use, a detailed load consumption model was developed for this analysis. An arbitrary load duration curve, shown in Figure 2.3, is assumed, and is expressed with Equation 2.4. The slope of the curve is determined by "a", which is a function of the load factor (average power divided by peak power). When "a" is zero, the power profile is flat and the load factor is equal to one.

$$P = e^{-at} \tag{2.4}$$

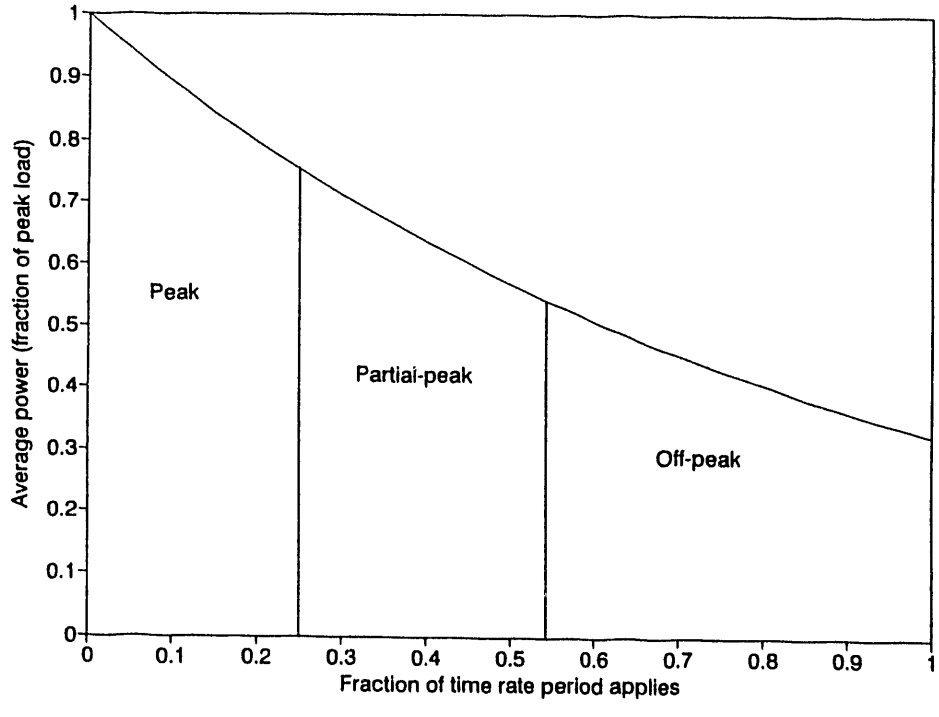

FIGURE 2.3. Weekly Load Duration Curve Used for Time-of-Loss Calculation

The average power is given in Equation 2.5, which is the same as the load factor since the peak power is normalized.

$$F_{LD} = \int_0^1 e^{-at} \tag{2.5}$$

where F_{LD} = Load Factor

The factor "a" can be explicitly calculated as a function of the load factor, F_{LD}. This equation was solved by iteration with a curve-fit applied, which is given in Equation 2.6.

$$a = 10.277e^{-3.779F_{LD}} \tag{2.6}$$

where F_{LD} = Load Factor, which can be applied over the range $0.3 \leq F_{LD} \leq 0.8$

The average power consumed during each of the rate periods (peak, partial-peak, and off-peak) are given in Equations 2.7, 2.8, and 2.9, respectively, where T_i is the fraction of time when that particular rate applies. The total load loss for each of the rate periods is the normalized square of these averages, as shown in Figure 2.4.

$$P_{ave}\ (\text{Peak Period}) = \frac{1}{aT_1}[1-e^{-aT_1}] \tag{2.7}$$

where $T_i = T_1$

$$P_{ave}\ (\text{Partial-Peak Period}) = \frac{1}{aT_2}[e^{-aT_1}-e^{-a(T_1+T_2)}] \tag{2.8}$$

where $T_i = T_2$

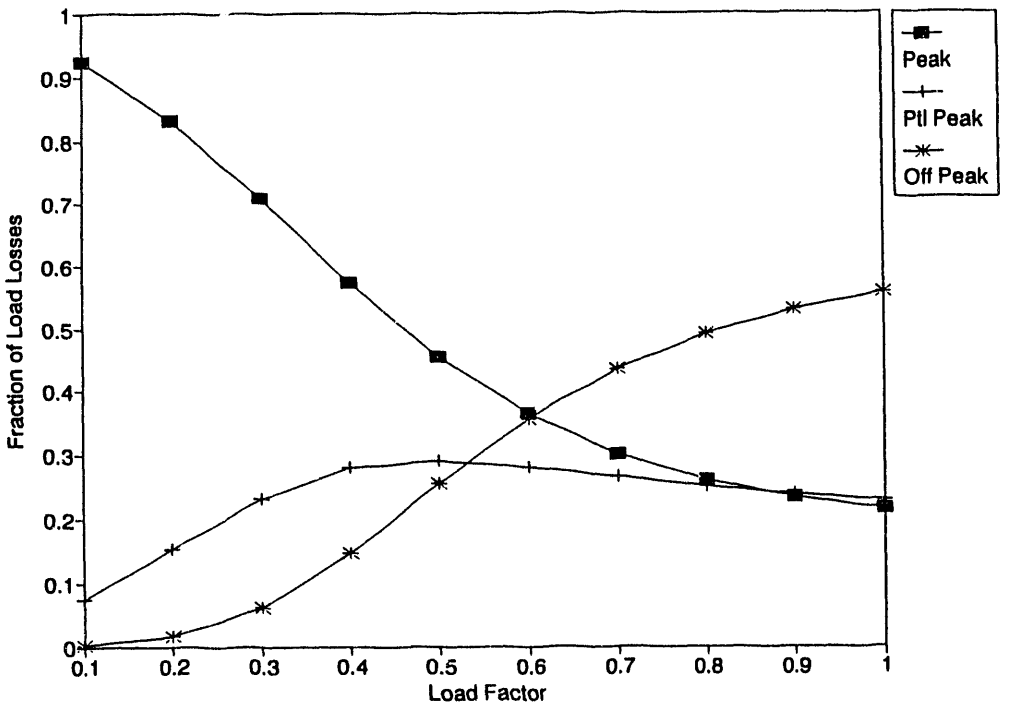

FIGURE 2.4. Load Loss Distribution Between Rate Periods

$$P_{ave}\ (\text{Off-Peak Period}) = \frac{1}{aT_3}[e^{-a(T_1+T_2)} - e^{-a}] \qquad (2.9)$$

where $T_i = T_2$

Results

The four transformer EROs described previously are summarized in Table 2.34. Both retrofit EROs, in which the transformers are immediately replaced with the new energy-efficient units, and ROF EROs where new transformer technology is gradually phased in as transformers are replaced at VAFB, have been analyzed.

Figure 2.5 shows the NPV of the four transformer EROs for the retrofit option. In these cases, the full cost of the material and labor and the increased incremental cost of replacement after 15 years must be offset by sufficient accumulated energy savings to justify the investment.

TABLE 2.34. Transformer ERO Options

ERO No.	Description	Cost Factor	Loss Reduction No-load	(%) Load
1	Improved silicon steel core	1.2	25	0
2	Amorphous core	1.4	70	0
3	Improved silicon steel/windings	1.3	25	20
4	Amorphous core/improved windings	1.5	70	20

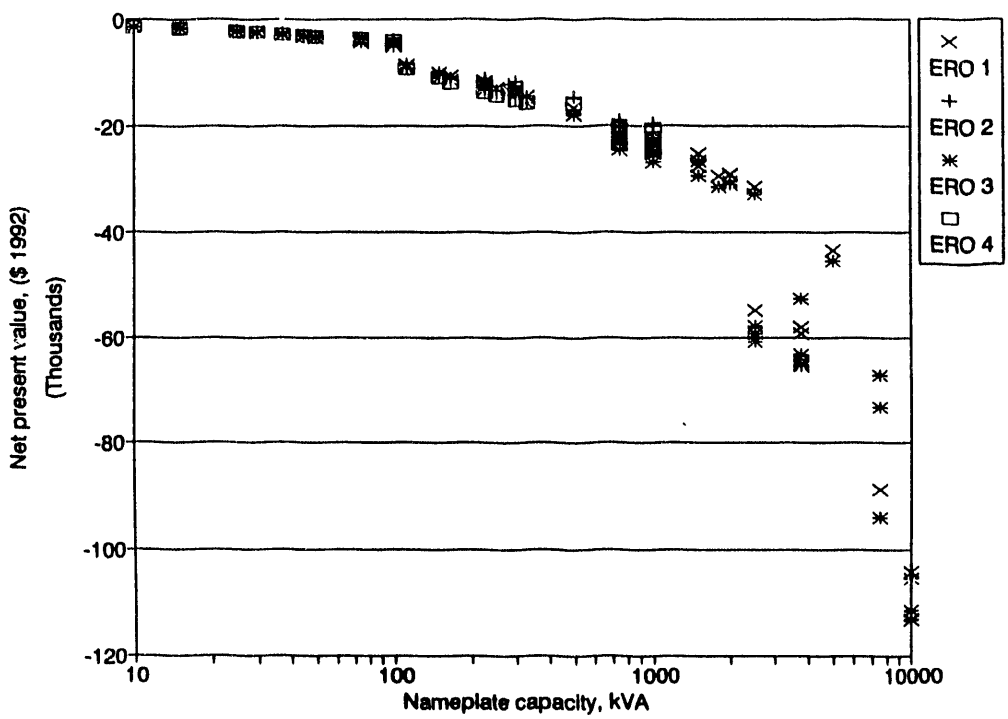

FIGURE 2.5. NPV for RI EROs

The NPV for the ROF EROs are shown in Figure 2.6. Only the increased incremental cost of the energy efficient transformer including the replacement cost must be offset by accumulated energy savings to economically justify investment in these cases.

Annual energy savings are calculated by adding the energy savings of the transformer EROs with the highest positive NPV. This is given in Figure 2.7 for the ROF EROs. These values assume that all transformers in each size category have been replaced when the NPV is greater than zero with new

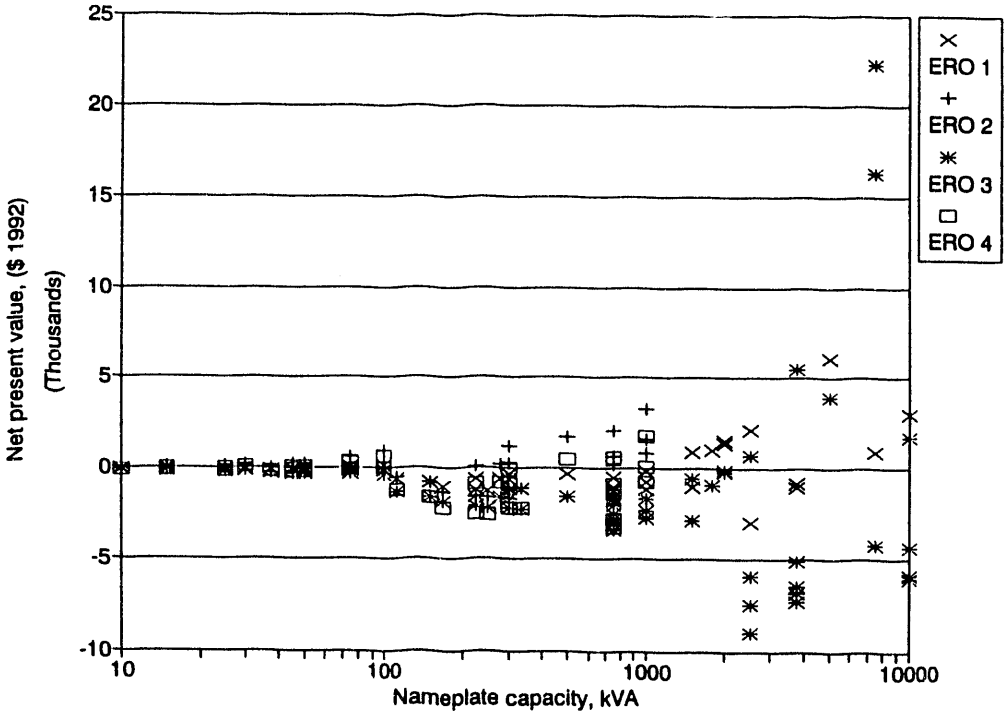

FIGURE 2.6. NPV for ROF EROs

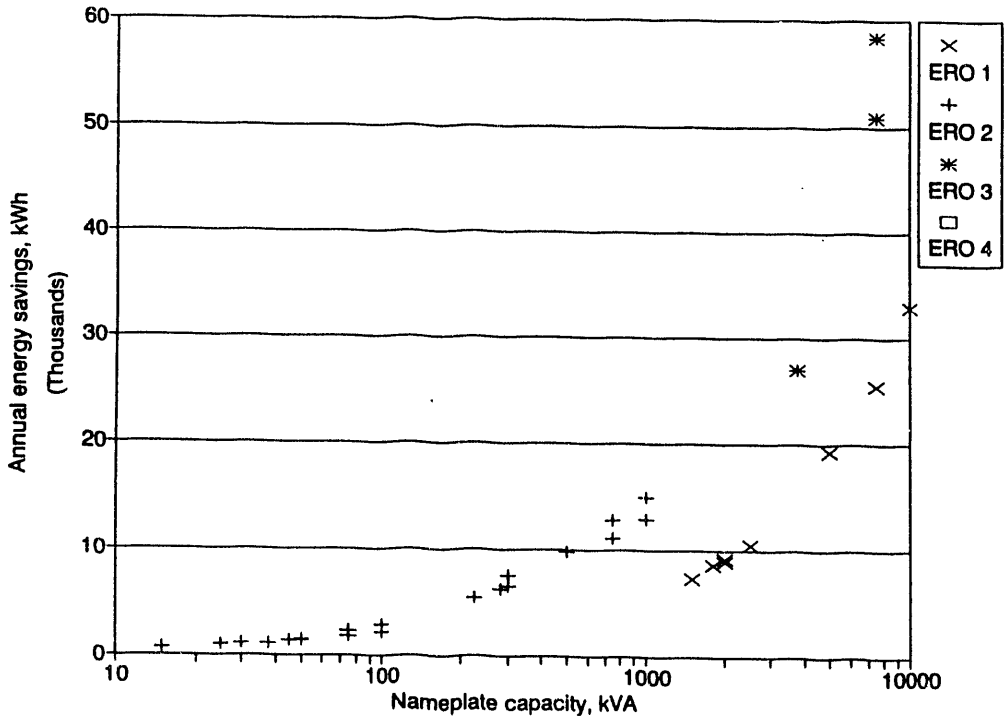

FIGURE 2.7. Total Annual Energy Savings for ROF EROs With a Positive NPV

high-efficiency units. Since this is an ROF scenario, this would represent the annual energy savings in 2007, 15 years from the present. The annual energy savings in any particular year prior to this would be a fraction of this, depending on the transformer replacement schedule.

From Figure 2.7, ERO #2 (amorphous core) is the most cost-effective ERO for all transformer categories below 1000 kVA (the highest NPV of all positive NPVs). However, some transformer categories under 1000 kVA are not cost effective and have negative NPVs. This paradox appears to be a result of modeling NPV results with the simplified cost model. First, there is discontinuity between hardware cost of the larger and smaller sizes, defined arbitrarily. Secondly, the cost model has been simplified to account for only kVA, while the loss data accounts for number of phases and voltage in addition to kVA. In addition, load information used to estimate losses (see Volume 1) is an average of all transformers rather than loss by each individual transformer. All transformers under 1000 kVA are assumed to be replaced regardless of the NPV. This results in an overall positive NPV of $11,000, with total annual energy savings of 2,582,608 kWh.

For transformer sizes over 1000 kVA, both ERO #1 and ERO #3 (improved silicon steel core material without and with improved windings, respectively) are optimum for specific transformers. Some of these transformers are more heavily loaded and the decrease in load loss is more substantial with respect to annual energy loss savings. However, for reasons similar to those stated for ERO #2 above, the entire category will be analyzed together. Summing transformer NPVs for sizes over 1000 kVA, ERO #1 has a positive NPV ($38,000) while ERO #3 has a negative NPV (-$35,000). Therefore, ERO #1 can be applied to all transformers over 1000 kVA with a positive overall NPV with a total annual energy savings of 467,188 kWh.

To summarize the results, replacing all of the transformers under 1000 kVA with amorphous core transformers and those over 1000 kVA with improved silicon steel core material is cost effective using the LCC approach defined. Upon completion of phased implementation (estimated at 15 years), a total energy savings of about 3,050,000 kWh per year would occur, which represents more than 40% of the current transformer annual energy loss.

Conclusions

No cost-effective transformer EROs exist for any of the retrofit options because material and labor cost investment is too high to offset the accumulated energy cost savings. There is, however, significant potential for energy savings with a ROF strategy. Annual energy savings would accrue as the new energy efficient transformers are substituted for current conventional transformers, with eventually the entire VAFB stock consisting of high-efficiency transformers.

The no-load loss is highly dependant on the transformer size. As described in Volume 2: Baseline Detail (Halverson et al. 1993) the average transformer capacity for VAFB is much greater than the actual peak load, resulting in much higher no-load losses than necessary. The potential to reduce this loss, by using transformer sizes closer to the actual requirements, is discussed below.

Transformer overload results in greater temperature rises than the unit is designed to tolerate. Transformer life is shortened through insulation degradation. The temperature rise is affected by ambient temperature, pre-load conditions, and duration of the peak loads. For example, a minimum life expectancy of 20 years can be expected at 95°C and 100°C hot-spot temperatures for transformers rated for 55°C and 65°C rise respectively (Gönen 1986). A more practical guideline is that transformers can be regularly loaded at 150% to 200% of nominal capacity without serious reduction in insulation life (ANSI/IEEE C57.92-1981).

When practical, transformers should be sized to minimize the total NPV estimated for the life of the transformer. This includes initial hardware, installation, and the accumulated energy loss costs. However, considerations of projected load growth or special circumstances need to be included when determining the size. Special considerations might include meeting critical loads with larger transformers that offer increased levels of reliability that provide safeguards against interruptions in electricity supply.

Based on metered power consumption data and the connected transformer capacity (roughly 30 MW annual peak and over 170 MVA), there are opportunities

to potentially reduce transformer sizes at VAFB. This would not only result in reduced transformer energy consumption, but would also provide capital and labor cost savings when compared with installing transformers with similar capacity. Although it is unlikely that any retrofit opportunities exist, it is extremely likely (based on the results of this study) that opportunities exist to reduce the transformer capacities of new units being installed to replace worn-out, existing ones. Coupled with the energy efficient units analyzed in this report, new strategies for transformer installation could result in significant cost savings.

2.9.2 Conservation Voltage Reduction

Conservation voltage reduction (CVR) regulates feeder voltage so that the load farthest from the substation is maintained at the minimum acceptable voltage under all load conditions on the circuit. Installing CVR can reduce feeder voltage by several percent without reducing performance in end-use loads. CVR used as a load management measure has shown that energy consumption is reduced by approximately 0.7% for each 1% reduction in voltage (Secrest et al. 1991).

The National Electric Code specifies that the service voltage must remain within 5% of the nominal rating at all times (Earley et al. 1989). With distribution feeders the voltage drop is a function of load and voltage taps at substations are therefore set to provide minimum voltage at the end of the feeder during full-load conditions. Throughout most of the loading cycle, however, the voltage for much of the feeder is higher than the minimum allowable voltage because the voltage drop on the feeder is usually less than it is during full load.

A study performed by PNL for Bonneville Power Administration in the Pacific Northwest showed substantial cost-effective conservation potential using CVR at energy costs lower than $0.05/kWh (De Steese et al. 1987). The best opportunities for CVR are dense energy-use areas with feeders 3 to 12 miles long, which is similar to the situation at VAFB. Therefore, VAFB is expected to be an ideal candidate for some level of CVR implementation. The further detailed evaluation that would be required to determine the extent of the CVR potential at VAFB was beyond the scope of this analysis.

2.10 TRANSPORTATION

This analysis considered the VAFB motor vehicle fleet consisting of approximately 670 United States Air Force (USAF) vehicles and 547 General Services Administration (GSA) vehicles. These vehicles consist primarily of cars, pickups, vans, trucks, buses, station wagons, and forklifts and their life expectancy ranged up to 14 years. No tactical USAF vehicles were considered in this analysis. They presently use unleaded gasoline or diesel fuel. All of these vehicles can be converted to operate on compressed natural gas (CNG) as a primary- or dual-fuel source.

Converting Unleaded Gasoline Vehicles to CNG

Most unleaded gasoline-powered cars and trucks can be converted to operate on CNG in either single fuel (CNG only) or a dual fuel (either gasoline or CNG) configuration. Modifications include changes to the fuel delivery and carburetor system. Fuel injected cars can also be easily converted. The conversion equipment consists of fuel storage cylinders, a pressure regulator, a gas/air mixer, a fuel selector control (for dual fuel use), and a fuel gage. A typical vehicle can usually be converted to CNG in less than a day.

Converting Diesel Vehicles to CNG

One of the primary advantages of diesel fuel is its high centane rating which allows the fuel to autoignite when sufficiently compressed. Compression ignition simplifies the diesel engine, as compared to spark plug engines, by eliminating the spark plugs, distributors, and other electrical components. Ordinarily natural gas will not autoignite due to its low centane rating. Therefore, some means of igniting the alternative fuel must be provided. Some of the proven ignition methods are to add spark plugs, glow plugs, or use a fumigation system. The traditional approach for having a diesel engine burn natural gas is to add spark plugs and associated electronics. Rather than make these extensive engine modifications, a fumigation system can be used. A fumigation system burns natural gas in tandem with diesel fuel. For this

type of conversion, diesel is used as a "pilot fuel" for starting and for low engine RPM operation. The amount of natural gas is increased as engine speed increases.

Retrofitting a diesel engine to CNG using a fumigation system is very similar to converting a gasoline engine to CNG. The major difference is the need for an RPM monitoring device to control the mixture of diesel and natural gas. The mixture of fuels is controlled by either mechanical or solenoid switches. Diesel is used to start the engine and is decreased as engine speed increases. When engine speed drops off during gear changes, diesel again becomes the primary fuel.

Assumptions

The technical assumptions are as follows:

- Gasoline energy content is 110,000 Btu per gallon.
- Diesel energy content is 135,000 Btu per gallon.
- Unleaded gasoline vehicles are converted to vehicles that use CNG only while diesel vehicles are converted to dual fuel vehicles (diesel and CNG).
- CNG fuel efficiency is 7% greater than gasoline or diesel fuel.
- The fumigation system conversion used with diesel fuel vehicles will operate with an overall average fuel mix ratio of 40% diesel and 60% CNG.
- Vehicle equipment code and description, number of vehicles, model year, average approximate age, existing fuel type, and average miles per year were supplied by USAF and GSA personnel at VAFB.
- Conversion costs range from $2,000 to $4,000 per conversion depending on the driving range, type of fueling system required, and size of the vehicle. This was the only initial cost considered in this transportation analysis. Smaller vehicles like cars generally require fewer storage cylinders and are, therefore, less expensive to convert as compared with large trucks and buses. Diesel conversion costs are generally more than that of unleaded fuel conversion because of the need for a fumigation system. There will be additional initial costs associated with building CNG refueling stations.
- These costs, however, were not included because of insufficient data concerning the number of refueling station necessary at VAFB.

A CNG refueling station similar to a typical unleaded gas or diesel fueling station will, however, cost approximately $100,000.[a] The cost of the station depends on the size of the compressor station and the number and capacity of fast-fill and slow-fill refueling units.

- O&M costs for vehicles operating on CNG are estimated to be reduce by as much as 50%.[b] This is primarily due to CNG being a cleaner burning fuel as compared with unleaded gas and diesel. For example, tune-ups are required less frequently because of less carbon build-up on the spark plugs. In addition, oil changes are required less frequently and engine and muffler life is often extended with CNG vehicles. For this analysis, a conservative average 25% reduction was used.

- Some vehicles at VAFB were not analyzed for this ERO; this includes: electric vehicles (e.g., forklifts and lift trucks), special purpose vehicles (wreckers, some maintenance trucks, cargo trucks, cranes), large maintenance trucks (e.g., lift trucks, armored personnel carriers, fire trucks), and heavy equipment vehicles (e.g., trains, tractors, water sprayers, crushers, pavement drills, ditch digging machines).

Results

The complete quantitative results of this ERO appear in Table 2.35 (VAFB Existing Transportation Outlook) and Table 2.36 (VAFB Transportation Outlook Upon Conversion to CNG-Fueled Vehicles). These tables contain specific energy, cost, and economic performance data. This ERO affects approximately 670 USAF vehicles and 547 GSA vehicles.

Budget Implications. The estimated present value of the initial cost for those vehicles types being converted to CNG use with a positive NPV is $892,398.

Energy and Cost Savings. It is estimated that this ERO will result in a PV of energy savings of $2,598,956 and an NPV of $3,533,055.

Energy Security. Natural gas is a domestic energy source, whereas most unleaded gasoline and diesel fuel use relies on imported oil. For this

---

(a) "Fueling the Future: Oklahoma's Alternative Fuels Program." 1992. Oklahoma Natural Gas Company, Oklahoma City, Oklahoma.
(b) "Environmentally Clean Compressed Natural Gas: A New Motor Fuel for Oklahoma." 1992. Oklahoma Natural Gas Company, Oklahoma City, Oklahoma.

reason, CNG vehicles are less vulnerable to world oil supply problems and cost fluctuations.

Operations and Maintenance. O&M costs for vehicles operating on CNG are estimated to be reduce by as much as 50%.[a] This is primarily due to CNG being a cleaner burning fuel as compared with unleaded gas and diesel. For example, tune-ups are required less frequently because of less carbon build-up on the spark plugs. In addition, oil changes are required less frequently and engine and muffler life is often extended with CNG vehicles. For this analysis, a conservative average 25% reduction was used.

Environmental Issues. Natural gas is a clean burning fuel. Emissions are estimated to significantly reduced. Federal and state regulations highly encourage CNG vehicles over standard fuels vehicles due to reductions in emissions.

Discussion of Analysis Limitations. CNG-fueled vehicles typically have a range of travel that is one-half that of existing unleaded gas and diesel vehicles. These vehicles, however, can be retrofitted with additional storage tanks beyond that applied in a normal conversion. This analysis does not include the costs for refueling stations (approximate initial cost of $100,000). However, with an NPV of approximately $3.5 million for this ERO, there is room for a construction of a considerable number of refueling stations while still maintaining a positive NPV.

(a) "Environmentally Clean Compressed Natural Gas: A New Motor Fuel for Oklahoma." 1992. Oklahoma Natural Gas Company, Oklahoma City, Oklahoma.

TABLE 2.35. VAFB Existing Transportation Outlook

ID Veh. Code	RI or Vehicle ROF	Type	Vehicle Description	Existing Fuel	Number of Veh.	Year Installed (Year)	Time Until Failure (Years)	Life Expectancy (Years)	Total Existing Annual Maint. Cost (1992 $)	Total Existing Fuel Consumption (NG or D) (MBtu/yr)	Total Existing Fuel Cost (NG or D) (1992$)	Present Value of Energy Costs (1992 $)
B121	ROF	Bus	School, 28-29 pegr, 4x2	Diesel	3	1985	7	14	15600	249	1255	21521
B130	ROF	Bus	School, 42-45 pegr, 4x2	Diesel	13	1983	5	14	28451	1468	7405	127015
B139	ROF	Bus	Intercity, 41-51 pegr, 4x2	Diesel	2	1980	2	14	3555	54	273	4680
B176	ROF	Truck	Multistop, 4x2, 8,499 GVW & under	Diesel	4	1985	1	8	118	62	311	5331
B180	ROF	Truck	Multistop, 4x2, 1-ton	Diesel	13	1987	3	8	34682	1079	5439	93302
B191	ROF	Truck	Carryall, 4x2, Conv, 9 pegr	Diesel	7	1990	6	8	35626	1076	5424	93046
B211	ROF	Pickup	Compact, 4x4, 4,600-5,799 GVW	Diesel	7	1988	4	8	16294	9130	46046	789854
B264	ROF	Truck	Stake, 4x2, 12,500-16,999 GVW, 1-1/2 ton	Diesel	12	1986	3	9	9231	1379	6955	119297
B353	ROF	Truck	Tractor, 4x2, 24,000-44,500 GVW	Diesel	12	1984	1	9	15604	45	226	3872
B361	ROF	Truck	Tractor, 6x4, 24,000-44,500 GVW	Diesel	17	1981	1	9	129338	328	1653	28361
E816	ROF	Forklift	4,000#, PT	Diesel	5	1984	2	10	4611	18	93	1589
E820	ROF	Forklift	4,000#, Rgh Ter	Diesel	1	1984	2	10	922	3	15	264
E822	ROF	Forklift	6,000-6,200#, PT	Diesel	14	1986	4	10	11263	72	363	6228
E824	ROF	Forklift	15,000#	Diesel	5	1986	4	10	1779	14	72	1239
B102	ROF	Sedan	Compact, 4 pegr, Class II	Gas	12	1987	1	3	5459	280	1822	29823
B106	ROF	Sedan	Compact, Law Enforcement, Class II	Gas	18	1992	3	3	17069	7123	46298	757830
B150	ROF	Wagon	Station Wagon, Compact, Class II	Gas	13	1986	1	7	6396	304	1975	32320
B162	ROF	Ambulance	Modular, 4x2	Gas	4	1986	2	8	1699	312	2031	33241
B163	ROF	Ambulance	Modular, 4x4	Gas	3	1984	1	8	6453	88	575	9411
B164	ROF	Ambulance	Modular, 4x4, 4 litter	Gas	1	1982	1	8	2151	5	29	479
B168	ROF	Truck	Panel Truck, 4x2, 6,999 GVW & under	Gas	13	1986	3	9	15467	694	4509	73798
B185	ROF	Truck	Carryall, 4x2, 6,999 GVW & under	Gas	24	1988	5	9	6018	1462	9503	155548
B190	ROF	Truck	Carryall, 4x4, 7,500 GVW	Gas	2	1987	4	9	6328	217	1412	23115
B192	ROF	Truck	Carryall, 4x2, Conv, 15 pegr, 7,700 GVW	Gas	7	1986	3	9	3953	102	666	10903
B198	ROF	Truck	Utility, 4x4, 6,000 GVW	Gas	43	1989	6	9	152663	14083	91533	1498255
B199	ROF	Truck	Utility, 4x4, 3,500 GVW and over	Gas	4	1989	6	9	2263	193	1257	20572
B200	ROF	Pickup	Compact, 4x2, 4,599 GVW & under	Gas	93	1986	2	8	40811	3357	21817	357111
B204	ROF	Pickup	Compact, 4x2, 4,600-5,799 GVW	Gas	27	1988	4	8	25529	1064	6915	113190
B217	ROF	Pickup	4 dr cab, 4x2, 5,500 GVW	Gas	74	1986	2	8	98932	26378	171448	2806337
B222	ROF	Pickup	4 dr cab, 4x4, 7,000-8510 GVW	Gas	24	1987	3	8	36486	45304	294459	4819845
B239	ROF	Truck	Cargo, 4x4, 17,000-20,999 GVW	Gas	4	1988	5	9	5408	55	354	5798
B255	ROF	Truck	Cargo 4 Dr 4x2, 17,000-20999# GVW	Gas	2	1986	3	9	29924	67	434	7111
B261	ROF	Truck	Stake, 4x2, 7000-9999# GVW	Gas	34	1988	5	9	61683	16827	109369	1790204
B265	ROF	Truck	Stake	Gas	5	1988	5	9	2007	100	647	10593
B274	ROF	Truck	Stake, 4x4, 12500-16999# GVW	Gas	2	1982	1	9	79	17	112	1835
B352	ROF	Truck	Tractor, 44x2, 24000-44500# GVW	Gas	3	1982	1	9	6921	6	37	598
B364	ROF	Truck	Tractor, Missile/Lox, 6x4, 2400-44500# GVW	Gas	2	1968	1	9	15586	6	36	585
E801	ROF	Tractor	Whse, 4,000-6,999#	Gas	5	1984	1	9	225	46	301	4920
E830	ROF	Forklift	2,000-5,999#, ST	Gas	1	1976	1	10	1050	74	478	7820
E831	ROF	Forklift	2,000-5,999#, PT	Gas	2	1978	1	10	2100	14	89	1463
E832	ROF	Forklift	6,000-9,999#, PT	Gas	6	1975	1	10	11868	161	1049	17170
E835	ROF	Forklift	15,000-17,999#	Gas	1	1967	1	10	217	18	114	1862
E940	ROF	Lift	Platform, 40K, 463L	Diesel	1	1976	1	8	7111	0	0	0
E956	ROF	Forklift	Hunter, 463L, 10K	Diesel	2	1991	9	10	4600	28	143	2446
120000	ROF	Sedan	Compact Sedan	Gas	285	1990	3	5	129675	8047	52303	856115
210000	ROF	Wagon	Compact Station Wagon	Gas	15	1989	1	3	7380	427	2778	45472
411100	ROF	Van	Van, Cargo w/ windows (<6,000 GVWR)	Gas	8	1990	4	6	9520	366	2376	38890
411505	ROF	Van	5 Passenger Van	Gas	15	1990	4	6	7500	735	4777	78196
411507	ROF	Van	7 Passenger Van	Gas	110	1989	3	6	55000	4485	29148	477112
415000	ROF	Pickup	Pickup, 2 Door Cab, Incl. Compact (<6,000 GVWR)	Gas	71	1990	4	6	31169	2663	17305	283260
421000	ROF	Van	Van, Cargo (6,000 - 8,499 GVWR)	Gas	9	1989	3	6	10710	279	1811	29638
421508	ROF	Van	8 Passenger Van (6,000 - 8,499 GVWR)	Gas	26	1991	5	6	13000	710	4615	75536
421512	ROF	Van	12 Passenger Van (6,000 - 8,499 GVWR)	Gas	2	1991	5	6	1000	80	517	8462
425000	ROF	Pickup	Pickup, 2 Door Cab, Incl. Compact (6,000 - 8,499 GVWR)	Gas	13	1991	4	5	12298	679	4412	72215
435000	ROF	Pickup	Pickup, 2 Door Cab, Incl. Compact (8,500 - 12,499 GVWR)	Gas	21	1990	4	6	19866	564	3666	60003
435200	ROF	Pickup	Pickup, Crewcab (8,500 - 12,499 GVWR)	Gas	8	1989	3	6	7568	238	1545	25290
435500	ROF	Truck	Maint, Tele-Utility, w/Cab	Gas	25	1989	3	6	106200	698	4536	74250
436500	ROF	D-Van	Delivery Van, Cutoff Cab (8,500 - 12,499 GVWR)	Gas	20	1989	3	6	53360	1153	7496	122701

TABLE 2.35. (contd)

ID Veh. Code	RI or ROF	Vehicle Type	Vehicle Description	Existing Fuel	Number of Veh.	Year Installed (Year)	Time Until Failure (Years)	Life Expectancy (Years)	Total Existing Annual Maint. Cost (1992 $)	Total Existing Fuel Consumption (NG or D) (MBtu/yr)	Total Existing Fuel Cost (NG or D) (1992$)	Present Value of Energy Costs (1992 $)
436602	ROF	D-Van	Multistop, Van (FC) (8,500 - 12,499 GVWR)	Gas	7	1987	1	6	18676	327	2123	34754
438000	ROF	Truck	Stake Truck, 2/4 Dr Cab (8,500 - 12,499 GVWR)	Gas	19	1989	3	6	14611	1112	7224	118251
610000	ROF	U-Van	Utility (Passenger/Cargo) (<6,000 GVWR)	Gas	8	1990	4	6	4000	378	2456	40199
610005	ROF	U-Van	5 Passenger Utility (Passenger/Cargo) (<6,000 GVWR)	Gas	8	1990	4	6	4000	455	2960	48448
B121	RI	Bus	School, 28-29 pegr, 4x2	Diesel	3	1985	7	14	15600	249	1255	21521
B130	RI	Bus	School, 42-45 pegr, 4x2	Diesel	13	1983	5	14	28451	1468	7405	127015
B139	RI	Bus	Intercity, 41-51 pegr, 4x2	Diesel	2	1980	2	14	3555	54	273	4680
B176	RI	Truck	Multistop, 4x2, 8,499 GVW & under	Diesel	4	1985	1	8	118	62	311	5331
B180	RI	Truck	Multistop, 4x2, 1-ton	Diesel	13	1987	3	8	34682	1079	5439	93302
B191	RI	Truck	Carryall, 4x2, Conv, 9 pegr	Diesel	7	1990	6	8	35626	1076	5424	93046
B211	RI	Pickup	Compact, 4x4, 4,600-5,799 GVW	Diesel	7	1988	4	8	16294	9130	46046	789854
B264	RI	Truck	Stake, 4x2, 12,500-16,999 GVW, 1-1/2 ton	Diesel	12	1986	3	9	9231	1379	6955	119297
B353	RI	Truck	Tractor, 4x2, 24,000-44,500 GVW	Diesel	12	1984	1	9	15604	45	226	3872
B361	RI	Truck	Tractor, 6x4, 24,000-44,500 GVW	Diesel	17	1981	1	9	129338	328	1653	28361
E816	RI	Forklift	4,000#, PT	Diesel	5	1984	2	10	4611	18	93	1589
E820	RI	Forklift	4,000#, Rgh Ter	Diesel	1	1984	2	10	522	3	15	264
E822	RI	Forklift	6,000-6,200#, PT	Diesel	14	1986	4	10	11263	72	363	6228
E824	RI	Forklift	15,000#	Diesel	5	1986	4	10	1779	14	72	1239
B102	RI	Sedan	Compact, 4 pegr, Class II	Gas	12	1987	1	3	5459	280	1822	29823
B106	RI	Sedan	Compact, Law Enforcement, Class II	Gas	18	1992	3	3	17069	7123	46298	757830
B150	RI	Wagon	Station Wagon, Compact, Class II	Gas	13	1986	1	7	6396	304	1975	32320
B162	RI	Ambulance	Modular, 4x2	Gas	4	1986	2	8	1699	312	2031	33241
B163	RI	Ambulance	Modular, 4x4	Gas	3	1984	1	8	6453	88	575	9411
B164	RI	Ambulance	Modular, 4x4, 4 litter	Gas	1	1982	1	8	2151	5	29	479
B168	RI	Truck	Panel Truck, 4x2, 6,999 GVW & under	Gas	13	1986	3	9	15467	694	4509	73798
B185	RI	Truck	Carryall, 4x2, 6,999 GVW & under	Gas	24	1988	5	9	6018	1462	9503	155548
B190	RI	Truck	Carryall, 4x4, 7,500 GVW	Gas	2	1987	4	9	6328	217	1412	23115
B192	RI	Truck	Carryall, 4x2, Conv, 15 pegr, 7,700 GVW	Gas	7	1986	3	9	3953	102	666	10903
B198	RI	Truck	Utility, 4x4, 6,000 GVW	Gas	43	1989	6	9	152663	14083	91533	1498255
B199	RI	Truck	Utility, 4x4, 3,500 GVW and over	Gas	4	1989	6	9	2263	193	1257	20572
B200	RI	Pickup	Compact, 4x2, 4,599 GVW & under	Gas	93	1986	2	8	40811	3357	21817	357111
B204	RI	Pickup	Compact, 4x2, 4,600-5,799 GVW	Gas	27	1988	4	8	25529	1064	6915	113190
B217	RI	Pickup	4 dr cab, 4x2, 5,500 GVW	Gas	74	1986	2	8	98932	26378	171448	2806337
B222	RI	Pickup	4 dr cab, 4x4, 7,000-8510 GVW	Gas	24	1987	3	8	36486	45304	294459	4819845
B239	RI	Truck	Cargo, 4x4, 17,000-20,999 GVW	Gas	4	1988	5	9	5408	55	354	5798
B255	RI	Truck	Cargo 4 Dr 4x2, 17,000-20999# GVW	Gas	2	1986	3	9	29924	67	434	7111
B261	RI	Truck	Stake, 4x2, 7000-9999# GVW	Gas	34	1988	5	9	61683	16827	109369	1790204
B265	RI	Truck	Stake	Gas	5	1988	5	9	2007	100	647	10593
B274	RI	Truck	Stake, 4x4, 12500-16999# GVW	Gas	2	1982	1	9	79	17	112	1835
B352	RI	Truck	Tractor, 44x2, 24000-44500# GVW	Gas	3	1982	1	9	6921	6	37	598
B364	RI	Truck	Tractor, Missile/Lox, 6x4, 2400-44500# GVW	Gas	2	1968	1	9	15586	6	36	585
E801	RI	Tractor	Whse, 4,000-6,999#	Gas	5	1984	1	9	225	46	301	4920
E830	RI	Forklift	2,000-5,999#, ST	Gas	1	1976	1	10	1050	74	478	7820
E831	RI	Forklift	2,000-5,999#, PT	Gas	2	1978	1	10	2100	14	89	1463
E832	RI	Forklift	6,000-9,999#, PT	Gas	6	1975	1	10	11868	161	1049	17170
E835	RI	Forklift	15,000-17,999#	Gas	1	1967	1	10	217	18	114	1862
E940	RI	Lift	Platform, 40K, 463L	Diesel	1	1976	1	8	7111	0	0	0
E956	RI	Forklift	Huster, 463L, 10K	Diesel	2	1991	9	10	4600	28	143	2446
120000	RI	Sedan	Compact Sedan	Gas	285	1990	3	5	129675	8047	52303	856115
210000	RI	Wagon	Compact Station Wagon	Gas	15	1989	1	3	7380	427	2778	45472
411100	RI	Van	Van, Cargo w/ windows (<6,000 GVWR)	Gas	8	1990	4	6	9520	366	2376	38890
411505	RI	Van	5 Passenger Van	Gas	15	1990	4	6	7500	735	4777	78196
411507	RI	Van	7 Passenger Van	Gas	110	1989	3	6	55000	4485	29148	477112
415000	RI	Pickup	Pickup, 2 Door Cab, Incl. Compact (<6,000 GVWR)	Gas	71	1990	4	6	31169	2663	17305	283260
421000	RI	Van	Van, Cargo (6,000 - 8,499 GVWR)	Gas	9	1989	3	6	10710	279	1811	29638
421508	RI	Van	8 Passenger Van (6,000 - 8,499 GVWR)	Gas	26	1991	5	6	13000	710	4615	75536
421512	RI	Van	12 Passenger Van (6,000 - 8,499 GVWR)	Gas	2	1991	5	6	1000	80	517	8462
425000	RI	Pickup	Pickup, 2 Door Cab, Incl. Compact (6,000 - 8,499 GVWR)	Gas	13	1991	4	5	12298	679	4412	72215

TABLE 2.35. (contd)

ID Veh. Code	RI or ROF	Vehicle Type	Vehicle Description	Existing Fuel	Number of Veh.	Year Installed (Year)	Time Until Failure (Years)	Life Expectancy (Years)	Total Existing Annual Maint. Cost (1992 $)	Total Existing Fuel Consumption (NG or D) (MBtu/yr)	Total Existing Fuel Cost (NG or D) (1992$)	Present Value of Energy Costs (1992 $)
435000	RI	Pickup	Pickup, 2 Door Cab, Incl. Compact (8,500 - 12,499 GVWR)	Gas	21	1990	4	6	19866	564	3666	60003
435200	RI	Pickup	Pickup, Crewcab (8,500 - 12,499 GVWR)	Gas	8	1989	3	6	7568	238	1545	25290
435500	RI	Truck	Maint, Tele-Utility, w/Cab	Gas	25	1989	3	6	106200	698	4536	74250
436500	RI	D-Van	Delivery Van, Cutoff Cab (8,500 - 12,499 GVWR)	Gas	20	1989	3	6	53360	1153	7496	122701
436602	RI	D-Van	Multistop, Van (FC) (8,500 - 12,499 GVWR)	Gas	7	1987	1	6	18676	327	2123	34754
438000	RI	Truck	Stake Truck, 2/4 Dr Cab (8,500 - 12,499 GVWR)	Gas	19	1989	3	6	14611	1112	7224	118251
610000	RI	U-Van	Utility (Passenger/Cargo) (<6,000 GVWR)	Gas	8	1990	4	6	4000	378	2456	40199
610005	RI	U-Van	5 Passenger Utility (Passenger/Cargo) (<6,000 GVWR)	Gas	8	1990	4	6	4000	455	2960	48448

Notes:

D: Diesel; G: Unleaded Gas
ROF: Replace-on-Failure; RI: Replace-Immediately

TABLE 2.36. VAFB Transportation Outlook Upon Conversion to Fueled Vehicles

ID Veh. Code	RI or ROF	Vehicle Type	Vehicle Description	Resulting Fuel	Number of Veh.	Life Expectancy (Years)	Total Initial Conversion Cost (1992 $)	Total Annual Maint. Cost (1992 $)	Total NG Fuel Consumption (MBtu/yr)	Total NG Fuel Cost (1992$)	Total D Fuel Consumption (MBtu/yr)	Total D Fuel Cost (1992$)	Present Value of Installed Cost (1992 $)	Present Value of Energy Costs (1992 $)	Present Value of Annual O&M Costs (1992 $)	Present Value of Replacement Costs (1992 $)	Net Present Value (1992 $)	Value Index
B121	ROF	Bus	School, 28-29 pasg, 4x2	NG,D	3	14	9000	11700	135	$743	100	$502	$6,280	$22,269	$194,616	$1,233	$26,080	4.15
B130	ROF	Bus	School, 42-45 pasg, 4x2	NG,D	13	14	39000	21338	797	$4,387	587	$2,962	$29,777	$131,520	$344,311	$8,400	$30,572	1.03
B139	ROF	Bus	Intercity, 41-51 pasg, 4x2	NG,D	2	14	6000	2667	29	$162	22	$109	$5,243	$4,849	$40,796	$2,082	$3,690	0.74
B176	ROF	Truck	Multistop, 4x2, 8,499 GVW & under	NG,D	4	8	12000	89	33	$184	25	$124	$10,968	$5,524	$1,332	$13,592	-$24,348	NA
B180	ROF	Truck	Multistop, 4x2, 1-ton	NG,D	13	8	39000	26012	586	$3,223	431	$2,176	$32,579	$96,656	$405,555	$36,768	$30,783	0.94
B191	ROF	Truck	Carryall, 4x2, Conv, 9 pasg	NG,D	7	8	21000	26719	584	$3,214	430	$2,170	$15,328	$96,314	$437,943	$14,450	$51,881	3.38
B211	ROF	Pickup	Compact, 4x4, 4,600-5,799 GVW	NG,D	7	8	21000	12221	4959	$27,281	3652	$18,419	$16,771	$818,048	$193,941	$17,935	-$17,692	NA
B264	ROF	Truck	Stake, 4x2, 12,500-16,999 GVW, 1-1/2 ton	NG,D	12	9	36000	6923	749	$4,120	552	$2,782	$30,073	$123,586	$107,939	$27,910	-$34,735	NA
B353	ROF	Truck	Tractor, 4x2, 24,000-44,500 GVW	NG,D	12	9	36000	11703	24	$134	18	$90	$32,903	$4,012	$175,487	$33,844	-$13,364	NA
B361	ROF	Truck	Tractor, 6x4, 24,000-44,500 GVW	NG,D	17	9	51000	97004	178	$980	131	$661	$46,613	$29,385	$1,454,615	$47,948	$348,072	7.47
B816	ROF	Forklift	4,000#, PT	NG,D	5	10	15000	3458	10	$55	7	$37	$13,107	$1,647	$52,914	$10,687	-$9,088	NA
B820	ROF	Forklift	4,000#, Rgh Ter	NG,D	1	10	3000	692	2	$9	1	$6	$2,621	$274	$10,580	$2,137	-$1,816	NA
B822	ROF	Forklift	6,000-8,200#, PT	NG,D	14	10	42000	8447	39	$215	29	$145	$33,542	$6,450	$134,057	$24,110	-$26,626	NA
B824	ROF	Forklift	15,000#	NG,D	5	10	15000	1334	8	$43	6	$29	$11,979	$1,283	$21,171	$8,611	-$15,699	NA
B102	ROF	Sedan	Compact, 4 pasg, Class II	NG	12	2	24000	4094	229	$1,262	0	$0	$21,936	$23,765	$61,397	$97,071	-$94,222	NA
B106	ROF	Sedan	Compact, Law Enforcement, Class II	NG	18	3	36000	12802	5830	$32,072	0	$0	$30,073	$627,463	$199,593	$125,111	$26,103	0.87
B150	ROF	Wagon	Station Wagon, Compact, Class II	NG	13	7	39000	4797	249	$1,368	0	$0	$35,645	$25,754	$71,933	$53,656	-$60,996	NA
B162	ROF	Ambulance	Modular, 4x2	NG	4	8	12000	1274	256	$1,407	0	$0	$10,485	$27,020	$19,496	$12,427	-$11,253	NA
B163	ROF	Ambulance	Modular, 4x4	NG	3	8	9000	4840	72	$398	0	$0	$8,226	$7,499	$72,574	$10,194	$5,627	0.68
B164	ROF	Ambulance	Modular, 4x4, 4 litter	NG	1	8	3000	1613	4	$20	0	$0	$2,742	$281	$24,190	$3,398	$1,335	0.49
B168	ROF	Truck	Panel Truck, 4x2, 6,999 GVW & under	NG	13	9	39000	11600	568	$3,123	0	$0	$32,579	$61,103	$180,867	$30,236	-$3,977	NA
B185	ROF	Truck	Carryall, 4x2, 6,999 GVW & under	NG	24	9	72000	4513	1197	$6,583	0	$0	$54,972	$133,334	$72,827	$44,975	-$62,238	NA
B190	ROF	Truck	Carryall, 4x4, 7,500 GVW	NG	2	9	6000	4748	178	$978	0	$0	$4,792	$19,484	$75,322	$4,190	$12,207	2.55
B192	ROF	Truck	Carryall, 4x2, Conv, 15 pasg, 7,700 GVW	NG	7	9	21000	2965	84	$461	0	$0	$17,543	$9,029	$46,226	$16,281	-$20,155	NA
B198	ROF	Truck	Utility, 4x4, 6,000 GVW	NG	43	9	129000	114497	11525	$63,407	0	$0	$94,160	$1,304,447	$1,876,668	$71,499	$392,078	4.16
B199	ROF	Truck	Utility, 4x4, 3,500 GVW and over	NG	4	9	12000	1898	158	$871	0	$0	$8,759	$17,911	$27,824	$6,651	-$7,353	NA
B200	ROF	Pickup	Compact, 4x2, 4,599 GVW & under	NG	93	8	279000	30808	2747	$15,113	0	$0	$243,786	$290,266	$468,306	$288,930	-$335,226	NA
B204	ROF	Pickup	Compact, 4x2, 4,600-5,799 GVW	NG	27	8	81000	19146	871	$4,790	0	$0	$64,688	$95,409	$303,850	$59,176	-$45,257	NA
B217	ROF	Pickup	4 dr cab, 4x2, 8,500 GVW	NG	74	8	222000	74199	21588	$118,765	0	$0	$193,980	$2,261,197	$1,135,248	$229,901	$418,007	2.15
B222	ROF	Pickup	4 dr cab, 4x4, 7,000-8510 GVW	NG	24	8	72000	27385	37077	$203,977	0	$0	$60,148	$3,990,702	$426,653	$67,879	$909,965	13.47
B239	ROF	Truck	Cargo, 4x4, 17,000-20,999 GVW	NG	4	9	12000	4058	45	$245	0	$0	$9,162	$4,970	$65,453	$7,496	-$1,904	NA
B255	ROF	Truck	Cargo 4 Dr 4x2, 17,000-20999# GVW	NG	2	9	6000	22443	55	$301	0	$0	$5,012	$5,888	$349,920	$4,652	$80,831	16.13
B261	ROF	Truck	Stake, 4x2, 7000-9999# GVW	NG	34	9	102000	46262	13771	$75,782	0	$0	$77,877	$1,534,542	$746,483	$63,714	$272,888	3.50
B265	ROF	Truck	Stake	NG	5	9	15000	1505	81	$448	0	$0	$11,453	$9,080	$24,284	$9,370	-$14,143	NA
B274	ROF	Truck	Stake, 4x4, 12500-16999# GVW	NG	2	9	6000	59	14	$78	0	$0	$5,484	$1,462	$888	$5,641	-$10,481	NA
B352	ROF	Truck	Tractor, 4x2, 24000-44500# GVW	NG	3	9	9000	5191	6	$25	0	$0	$8,226	$477	$77,842	$8,461	$7,176	0.87
B364	ROF	Truck	Tractor, Missile/Lox, 6x4, 2400-44500# GVW	NG	2	9	6000	11689	6	$25	0	$0	$5,484	$466	$175,285	$5,641	$42,458	7.74
B801	ROF	Tractor	Wheel, 4,000-8,999#	NG	5	9	15000	169	38	$208	0	$0	$13,710	$3,921	$2,530	$14,102	-$26,040	NA
B830	ROF	Forklift	2,000-5,999#, ST	NG	1	10	2000	788	60	$331	0	$0	$1,828	$6,231	$11,809	$1,573	$1,789	0.98
B831	ROF	Forklift	2,000-5,999#, PT	NG	2	10	4000	1575	11	$62	0	$0	$3,656	$1,166	$23,618	$3,146	$899	0.19
B832	ROF	Forklift	6,000-9,999#, PT	NG	6	10	12000	8901	132	$727	0	$0	$10,968	$13,682	$133,470	$9,438	$23,790	2.17
B835	ROF	Forklift	15,000-17,999#	NG	1	10	2000	163	14	$79	0	$0	$1,828	$1,484	$2,444	$1,573	-$2,277	NA
B940	ROF	Lift	Platform, 40K, 463L	NG,D	1	8	4000	6333	0	$0	0	$0	$3,656	$0	$79,971	$4,531	$18,204	4.43
B956	ROF	Forklift	Hoster, 463L, 10K	NG,D	2	10	8000	3450	15	$84	11	$57	$3,827	$2,528	$56,956	$1,667	$2,981	0.78
120000	ROF	Sedan	Compact Sedan	NG	285	5	570000	97256	6588	$36,231	0	$0	$476,155	$708,840	$1,516,358	$1,055,655	-$997,683	NA
210000	ROF	Wagon	Compact Station Wagon	NG	15	3	45000	5535	350	$1,924	0	$0	$41,129	$36,234	$83,000	$182,009	-$188,585	NA
411100	ROF	Van	Van, Cargo w/ windows (<6,000 GVWR)	NG	8	8	24000	7140	299	$1,646	0	$0	$19,167	$32,781	$113,310	$31,756	-$18,402	NA
411505	ROF	Van	5 Passenger Van	NG	15	6	45000	5625	802	$3,309	0	$0	$35,938	$65,912	$89,268	$59,543	-$62,389	NA
411507	ROF	Van	7 Passenger Van	NG	110	6	330000	41250	3670	$20,192	0	$0	$275,669	$395,036	$643,144	$477,586	-$507,100	NA
415000	ROF	Pickup	Pickup, 2 Door Cab, Incl. Compact (<6,000 GVWR)	NG	71	6	213000	23377	2179	$11,988	0	$0	$170,107	$238,762	$370,985	$281,837	-$320,970	NA
421000	ROF	Van	Van, Cargo (6,000 - 8,499 GVWR)	NG	9	6	27000	8033	228	$1,254	0	$0	$22,555	$24,540	$125,238	$39,075	-$24,581	NA
421508	ROF	Van	8 Passenger Van (6,000 - 8,499 GVWR)	NG	26	6	78000	9750	581	$3,197	0	$0	$59,553	$64,748	$157,326	$93,957	-$109,251	NA
421512	ROF	Van	12 Passenger Van (6,000 - 8,499 GVWR)	NG	2	6	6000	750	65	$358	0	$0	$4,581	$7,254	$12,102	$7,227	-$8,025	NA
425000	ROF	Pickup	Pickup, 2 Door Cab, Incl. Compact (6,000 - 8,499 GVWR)	NG	13	5	39000	9224	556	$3,056	0	$0	$31,146	$60,871	$146,375	$68,286	-$51,968	NA
435000	ROF	Pickup	Pickup, 2 Door Cab, Incl. Compact (8,500 - 12,499 GVWR)	NG	21	6	63000	14900	482	$2,539	0	$0	$50,313	$50,577	$236,452	$83,380	-$69,131	NA
435200	ROF	Pickup	Pickup, Crewcab (8,500 - 12,499 GVWR)	NG	8	6	24000	5678	195	$1,070	0	$0	$20,049	$20,940	$88,497	$34,734	-$27,854	NA
435500	ROF	Truck	Maint, Tele-Utility, w/Cab	NG	26	6	100000	79650	571	$3,142	0	$0	$83,536	$61,477	$1,241,852	$144,723	$101,335	1.21
436500	ROF	D-Van	Delivery Van, Cutoff Cab (8,500 - 12,499 GVWR)	NG	20	6	60000	40020	944	$5,193	0	$0	$68,829	$101,594	$623,966	$115,778	-$2,313	NA
436602	ROF	D-Van	Multistop, Van (FC) (8,500 - 12,499 GVWR)	NG	7	6	28000	14007	267	$1,471	0	$0	$25,591	$27,693	$210,041	$47,956	-$2,425	NA
438000	ROF	Truck	Stake Truck, 2/4 Dr Cab (8,500 - 12,499 GVWR)	NG	19	6	76000	10958	910	$5,004	0	$0	$63,487	$97,909	$170,854	$109,990	-$109,548	NA
510000	ROF	U-Van	Utility (Passenger/Cargo) (<6,000 GVWR)	NG	8	6	32000	3000	309	$1,701	0	$0	$25,556	$33,884	$47,609	$42,342	-$50,485	NA
610005	ROF	U-Van	5 Passenger Utility (Passenger/Cargo) (<6,000 GVWR)	NG	8	6	24000	3000	373	$2,050	0	$0	$19,167	$40,837	$47,609	$31,756	-$32,215	NA
B121	RI	Bus	School, 28-29 pasg, 4x2	NG,D	3	14	9000	11700	135	$743	100	$502	$8,000	$22,269	$171,718	$4,005	$43,466	4.83
B130	RI	Bus	School, 42-45 pasg, 4x2	NG,D	13	14	39000	21338	797	$4,387	587	$2,962	$39,000	$131,548	$313,173	$17,356	$43,502	1.12
B139	RI	Bus	Intercity, 41-51 pasg, 4x2	NG,D	2	14	6000	2667	29	$162	22	$109	$6,000	$4,847	$39,136	$2,670	$4,208	0.70
B176	RI	Truck	Multistop, 4x2, 8,499 GVW & under	NG,D	4	8	12000	89	33	$184	25	$124	$12,000	$5,521	$1,304	$14,811	-$26,567	NA
B180	RI	Truck	Multistop, 4x2, 1-ton	NG,D	13	8	39000	26012	586	$3,223	431	$2,176	$39,000	$96,831	$381,765	$48,135	$36,790	0.94
B191	RI	Truck	Carryall, 4x2, Conv, 9 pasg	NG,D	7	8	21000	26719	584	$3,214	430	$2,170	$21,000	$96,366	$392,153	$25,919	$80,478	3.83
B211	RI	Pickup	Compact, 4x4, 4,600-5,799 GVW	NG,D	7	8	21000	12221	4959	$27,281	3652	$18,419	$21,000	$818,040	$179,381	$25,919	-$15,318	NA
B264	RI	Truck	Stake, 4x2, 12,500-16,999 GVW, 1-1/2 ton	NG,D	12	9	36000	6923	749	$4,120	552	$2,782	$36,000	$123,554	$101,607	$37,017	-$43,405	NA
B353	RI	Truck	Tractor, 4x2, 24,000-44,500 GVW	NG,D	12	9	36000	11703	24	$134	18	$90	$36,000	$4,010	$171,758	$37,017	-$15,903	NA
B361	RI	Truck	Tractor, 6x4, 24,000-44,500 GVW	NG,D	17	9	51000	97004	178	$980	131	$661	$51,000	$29,373	$1,423,702	$52,441	$370,114	7.28
B816	RI	Forklift	4,000#, PT	NG,D	5	10	15000	3458	10	$55	7	$37	$15,000	$1,646	$50,759	$12,959	-$11,097	NA
B820	RI	Forklift	4,000#, Rgh Ter	NG,D	1	10	3000	692	2	$9	1	$6	$3,000	$273	$10,149	$2,592	-$2,218	NA
B822	RI	Forklift	6,000-8,200#, PT	NG,D	14	10	42000	8447	39	$215	29	$145	$42,000	$6,450	$123,979	$36,286	-$37,182	NA
B824	RI	Forklift	15,000#	NG,D	5	10	15000	1334	8	$43	6	$29	$15,000	$1,283	$19,580	$12,959	-$21,477	NA
B102	RI	Sedan	Compact, 4 pasg, Class II	NG	12	3	24000	4094	229	$1,262	0	$0	$24,000	$23,229	$60,092	$104,378	-$101,753	NA
B106	RI	Sedan	Compact, Law Enforcement, Class II	NG	18	3	36000	12802	5830	$32,072	0	$0	$36,000	$590,272	$187,885	$158,567	$37,6[illegible]9	1.04
B150	RI	Wagon	Station Wagon, Compact, Class II	NG	13	7	39000	4797	249	$1,368	0	$0	$39,000	$25,174	$70,404	$58,492	-$66,878	NA
B162	RI	Ambulance	Modular, 4x2	NG	4	8	12000	1274	256	$1,407	0	$0	$12,000	$25,891	$18,701	$14,811	-$13,227	[illegible]
B163	RI	Ambulance	Modular, 4x4	NG	3	8	9000	4840	72	$398	0	$0	$9,000	$7,330	$71,032	$11,108	$5,650	0.63
B164	RI	Ambulance	Modular, 4x4, 4 litter	NG	1	8	3000	1613	4	$20	0	$0	$3,000	$373	$23,676	$3,703	$1,295	0.43
B168	RI	Truck	Panel Truck, 4x2, 6,999 GVW & under	NG	13	9	39000	11600	568	$3,123	0	$0	$39,000	$57,481	$170,257	$40,102	-$6,033	NA
B185	RI	Truck	Carryall, 4x2, 6,999 GVW & under	NG	24	9	72000	4513	1197	$6,583	0	$0	$72,000	$121,156	$66,241	$74,034	-$89,562	NA

TABLE 2.36. (contd)

ID Veh. Code	RI or ROF	Vehicle Type	Vehicle Description	Resulting Fuel	Number of Veh.	Life Expectancy (Years)	Total Initial Conversion Cost (1992 $)	Total Annual Maint. Cost (1992 $)	Total NG Fuel Consumption (k Btu/yr)	Total NG Fuel Cost (1992$)	Total D Fuel Consumption (MBtu/yr)	Total D Fuel Cost (1992$)	Present Value of Installed Cost (1992 $)	Present Value of Energy Costs (1992 $)	Present Value of Annual O&M Costs (1992 $)	Present Value of Replacement Costs (1992 $)	Net Present Value (1992 $)	Value Index
B190	RI	Truck	Carryall, 4x4, 7,500 GVW	NG	2	9	6000	4746	178	$978	0	$0	$6,000	$18,004	$69,859	$6,170	$18,161	2.89
B192	RI	Truck	Carryall, 4x2, Conv, 15 psgr, 7,700 GVW	NG	7	9	21000	2965	84	$461	0	$0	$21,000	$8,493	$43,515	$21,593	-$25,678	NA
B198	RI	Truck	Utility, 4x4, 6,000 GVW	NG	43	9	129000	114497	11525	$63,407	0	$0	$129,000	$1,166,987	$1,880,447	$132,845	$629,772	4.88
B199	RI	Truck	Utility, 4x4, 3,500 GVW and over	NG	4	9	12000	1698	158	$871	0	$0	$12,000	$16,024	$24,915	$12,339	-$11,485	NA
B200	RI	Pickup	Compact, 4x2, 4,599 GVW & under	NG	93	8	279000	30608	2747	$15,113	0	$0	$279,000	$278,153	$449,227	$244,353	-$394,652	NA
B204	RI	Pickup	Compact, 4x2, 4,600-5,799 GVW	NG	27	8	81000	19148	871	$4,790	0	$0	$81,000	$88,163	$281,008	$99,973	-$62,278	NA
B217	RI	Pickup	4 dr cab, 4x2, 5,500 GVW	NG	74	8	222000	74199	21588	$118,765	0	$0	$222,000	$2,185,849	$1,088,997	$274,001	$487,485	2.20
B222	RI	Pickup	4 dr cab, 4x4, 7,000-8510 GVW	NG	24	8	72000	27385	37077	$203,977	0	$0	$72,000	$3,754,166	$401,825	$88,865	$1,038,889	14.43
B239	RI	Truck	Cargo, 4x4, 17,000-20,999 GVW	NG	4	9	12000	4056	45	$245	0	$0	$12,000	$4,516	$59,533	$12,339	-$3,213	NA
B255	RI	Truck	Cargo 4 Dr 4x2, 17,000-20999# GVW	NG	2	9	6000	22443	55	$301	0	$0	$6,000	$5,539	$329,394	$6,170	$99,201	16.53
B261	RI	Truck	Stake, 4x2, 7000-9999# GVW	NG	34	9	102000	46262	13771	$75,762	0	$0	$102,000	$1,394,385	$678,975	$104,882	$415,261	4.07
B265	RI	Truck	Stake	NG	5	9	15000	1505	81	$448	0	$0	$15,000	$8,251	$22,088	$15,424	-$20,719	NA
B274	RI	Truck	Stake, 4x4, 12500-16999# GVW	NG	2	9	6000	59	14	$78	0	$0	$6,000	$1,429	$869	$6,170	-$11,474	NA
B352	RI	Truck	Tractor, 4x2, 24000-44500# GVW	NG	3	9	9000	5191	5	$25	0	$0	$9,000	$466	$76,187	$9,254	$7,274	0.81
B364	RI	Truck	Tractor, Missile/Lox, 6x4, 2400-44500# GVW	NG	2	9	6000	11689	5	$25	0	$0	$6,000	$456	$171,560	$6,170	$45,148	7.52
E801	RI	Tractor	Wheel, 4,000-6,999#	NG	5	9	15000	169	38	$208	0	$0	$15,000	$3,833	$2,477	$15,424	-$28,510	NA
E830	RI	Forklift	2,000-5,999#, ST	NG	1	10	2000	788	60	$331	0	$0	$2,000	$6,091	$11,558	$1,728	$1,854	0.93
E831	RI	Forklift	2,000-5,999#, PT	NG	2	10	4000	1575	11	$62	0	$0	$4,000	$1,139	$23,116	$3,456	$573	0.14
E832	RI	Forklift	6,000-9,999#, PT	NG	6	10	12000	8901	132	$727	0	$0	$12,000	$13,374	$130,634	$10,368	$24,973	2.08
E835	RI	Forklift	15,000-17,999#	NG	1	10	2000	183	14	$79	0	$0	$2,000	$1,450	$2,392	$1,728	-$2,519	NA
E940	RI	Lift	Platform, 40K, 463L	NG,D	1	8	4000	5333	0	$0	0	$0	$4,000	$0	$78,272	$4,937	$17,154	4.29
E958	RI	Forklift	Hustler, 463L, 10K	NG,D	2	10	6000	3450	15	$84	11	$57	$6,000	$2,533	$50,635	$5,184	$5,607	0.93
120000	RI	Sedan	Compact Sedan	NG	285	5	570000	97258	6586	$36,231	0	$0	$570,000	$666,826	$1,427,407	$1,340,963	-$1,245,872	NA
210000	RI	Wagon	Compact Station Wagon	NG	15	3	45000	5535	350	$1,924	0	$0	$45,000	$35,418	$81,238	$195,709	-$203,576	NA
411100	RI	Van	Van, Cargo w/ windows (<6,000 GVWR)	NG	8	6	24000	7140	299	$1,646	0	$0	$24,000	$30,292	$104,792	$44,513	-$24,983	NA
411505	RI	Van	5 Passenger Van	NG	15	6	45000	5625	602	$3,309	0	$0	$45,000	$60,906	$82,557	$83,461	-$83,653	NA
411507	RI	Van	7 Passenger Van	NG	110	6	330000	41250	3670	$20,192	0	$0	$330,000	$371,621	$605,417	$612,060	-$634,754	NA
415000	RI	Pickup	Pickup, 2 Door Cab, Incl. Compact (<6,000 GVWR)	NG	71	6	213000	23377	2179	$11,988	0	$0	$213,000	$220,630	$343,095	$395,050	-$431,056	NA
421000	RI	Van	Van, Cargo (6,000 - 8,499 GVWR)	NG	9	6	27000	8033	228	$1,254	0	$0	$27,000	$23,085	$117,891	$50,077	-$31,227	NA
421508	RI	Van	8 Passenger Van (6,000 - 8,499 GVWR)	NG	26	6	78000	9750	581	$3,197	0	$0	$78,000	$58,835	$143,098	$144,666	-$158,266	NA
421512	RI	Van	12 Passenger Van (6,000 - 8,499 GVWR)	NG	2	6	6000	750	65	$358	0	$0	$6,000	$6,591	$11,008	$11,128	-$11,588	NA
425000	RI	Pickup	Pickup, 2 Door Cab, Incl. Compact (6,000 - 8,499 GVWR)	NG	13	5	39000	9224	556	$3,056	0	$0	$39,000	$56,248	$135,371	$91,750	-$89,859	NA
435000	RI	Pickup	Pickup, 2 Door Cab, Incl. Compact (8,500 - 12,499 GVWR)	NG	21	6	63000	14900	462	$2,539	0	$0	$63,000	$46,736	$218,678	$116,846	-$93,687	NA
435200	RI	Pickup	Pickup, Crewcab (8,500 - 12,499 GVWR)	NG	8	6	24000	5678	195	$1,070	0	$0	$24,000	$19,898	$63,305	$44,513	-$35,153	NA
435500	RI	Truck	Maint, Tele-Utility, w/Cab	NG	25	6	100000	79650	571	$3,142	0	$0	$100,000	$57,833	$1,169,005	$185,470	$120,616	1.21
436500	RI	D-Van	Delivery Van, Cutoff Cab (8,500 - 12,499 GVWR)	NG	20	6	80000	40020	944	$5,193	0	$0	$80,000	$95,572	$587,364	$148,376	-$5,458	NA
436602	RI	D-Van	Multistop, Van (FC) (8,500 - 12,499 GVWR)	NG	7	6	28000	14007	267	$1,471	0	$0	$28,000	$27,069	$205,577	$51,931	-$3,722	NA
438000	RI	Truck	Stake Truck, 2/4 Dr Cab (8,500 - 12,499 GVWR)	NG	19	6	76000	10958	910	$5,004	0	$0	$76,000	$92,105	$160,832	$140,957	-$137,201	NA
610000	RI	U-Van	Utility (Passenger/Cargo) (<6,000 GVWR)	NG	8	6	32000	3000	309	$1,701	0	$0	$32,000	$31,311	$44,030	$59,350	-$67,788	NA
610005	RI	U-Van	5 Passenger Utility (Passenger/Cargo) (<6,000 GVWR)	NG	8	6	24000	3000	373	$2,050	0	$0	$24,000	$37,736	$44,030	$44,513	-$43,124	NA

Notes:

D: Diesel; G: Unleaded Gas
ROF: Replace-on-Failure; RI: Replace-Immediately
NA: Not Applicable - the VI is not relevant for EROs with negative NPVs.

3.0 CASE STUDY OF PROCESS LOADS AT SPACE LAUNCH COMPLEX-4

It was estimated in the VAFB Volume 2: Baseline Detail (Halverson et al. 1993) that almost 40% of the total energy use at VAFB is for mission-critical activities directly related to missile and rocket launches. This "process energy" encompasses actual vehicle-related activities as well as data gathering, processing, and telemetry in support of launches. There are at least 150 facilities at VAFB whose primary energy use is included in the process category.

There are six steps that every launch vehicle goes through during the launch process: receive, handle/hold, process, test, assemble, and launch. Unfortunately, any further breakdown of the launch process at VAFB is difficult, including determination of energy requirements. As is evident by the order of the steps in the launch process, a vehicle is not fully assembled until sometime just before the launch. Specific vehicle component parts do not necessarily have the same receive, handle/hold, process, and test requirements, and therefore require different facilities and lengths of time in each step. For example, it is difficult to compare or extrapolate the energy requirements of a fairing cleaning facility to a payload assembly building, even though they might both be involved in processing components of the same vehicle.

The several types of vehicle launched at VAFB further complicate generalizations in the analysis because each has its own requirements regarding clean room conditions (temperature and humidity control), hazardous chemical mitigation (oxidizer and fuel), payload air conditioning, electrical equipment purges, etc. These differences translate into significant differences in energy use. Ideally each process facility would be examined individually to characterize its energy-use and recommend EROs specific to that facility. A detailed energy analysis of 150 process facilities is, however, beyond the scope of this assessment.

Within the timeframe and budget of this project, it was decided that most accurate picture of process energy use would be obtained by taking a case study look at process energy use at a single Space Launch Complex (SLC) and

associated pre-launch process facilities. The pre-launch process facilities include the receive, handle/hold, process, test, and assemble steps of the launch process. Although tracking, communications, and data processing buildings are also involved in the launch process, it was assumed that EROs for these types of facilities would be limited to standard ventilation-type EROs with a launch-related cycle of usage. For the purpose of generating EROs, characterizing the energy use for these types of facilities was not deemed as important as development of process facilities EROs.

After examining information provided by VAFB staff, visiting SLC-2, and contacting personnel at the other SLCs, it was determined that SLC-4 was the best candidate for study for the following reasons:

- Of all SLCs at VAFB, SLC-4 is probably the largest process energy user.
- The mission support programs at SLC-4 will likely remain in place for the foreseeable future.
- SLC-4 has a reasonably frequent launch schedule.
- SLC-4 has a good balance of new and older equipment and systems.
- Although all personnel contacted at VAFB were courteous and helpful, the personnel at SLC-4 were especially helpful and responsive in providing necessary information to make this study meaningful and accurate, while maintaining required security measures.

Process energy analysis often requires a different analytical approach than do other types of energy analysis. "Supply-side" analysis attempts only to make individual pieces of equipment in a system use energy more efficiently; this type of analysis is often adequate for commercial and residential energy systems, but is actually only one of many steps in process energy analysis. Effective process energy analysis first requires that the process itself be challenged. Experts in the field of process energy analysis maintain that cost-effective energy reductions of 40% to 80% are not uncommon when using this "demand-side" analysis approach.

There are many barriers to process energy analysis in industry because of perceived risks regarding safety and quality. This is often justified by

the enormous capital that the process-derived energy supports, as is the case at VAFB. However, a growing list of industrial companies are finding that reduction in energy-use is not the only benefit to process energy analysis and reduction; they are finding that two to three times the benefit of energy savings is found in additional opportunities to reduce raw material losses, reduce waste treatment costs, improve product quality, and increase productivity. By challenging fundamental energy requirement and exploring different process technologies, process energy analysis can result in a safe, modified process with significantly lower consumption and an increase in quality of the end product. This type of energy analysis has the potential to be very valuable at VAFB, especially given the possibility of future commercial space missions.

Analysis of an existing process first requires that the energy use of each step of the process be quantified and accounted for. Next, the energy-intensive steps are identified and evaluated for alternatives, using a functional approach rather than an equipment- or technology-specific approach (e.g., by describing an existing drying process functionally as a "water removal" process, potential drying methods other than thermal drying can be explored). Then alternatives are examined and possibly tested on a small test-bed scale to determine if they are cost-effective, safe, and result in a quality end product. Finally, when the most suitable alternates are identified, each component of the process system is optimized.

This type of analysis is very detailed and requires intimate familiarity with the existing process requirements. This detailed analysis method could be applied to the many unique processes at VAFB. Analyzing these processes in the detail required to achieve the energy reductions cited above is, however, not within the scope of this study. Within the time and budget allotted for this study, there were three categories of process ERO identified at SLC-4 where potential process energy reductions were significant and possibly applicable to other similar systems at VAFB:

- Fuel and oxidizer vapor mitigation EROs
- Gaseous nitrogen EROs
- Conditioned airspace EROs

The EROs for the first category provide energy cost savings and environmental benefit as a result of changing the process itself rather than solely optimizing process equipment. The EROs for the last two categories did not actually change the process, but rather optimized specific process equipment for substantial energy and cost savings. The following sections describe these EROs in detail.

3.1 ENERGY CONSERVATION AT ACTIVE SLCs OTHER THAN SLC-4

Because of time, funding, and information availability constraints, the scope of this assessment only considered process energy conservation at SLC-4. This SLC was chosen for the following reasons:

1. SLC-4 has the greatest energy use of any active SLC and, therefore, has potential for a large energy savings impact.
2. Due to the secure nature of missions at the SLCs, significant assistance was required from SLC operating personnel to obtain the necessary data for economic analysis. This type of assistance was only provided at SLC-4.
3. The SLC-4 mission is relatively stable compared to the transient nature of the missions at other SLCs. For example, the SLC-5 mission to launch Scout missiles will be changing when the current supply of Scout missiles is depleted (about three years).

The SLC-4 analysis is generally conservative because this SLC is the most modern at VAFB and, consequently, energy savings are more difficult to achieve. Although differences exist between process and procedural requirements in handling the different vehicle types, energy conservation the other SLCs may be possible by applying some of the EROs considered at SLC-4.

3.2 FUEL AND OXIDIZER VAPOR MITIGATION SYSTEMS

This section describes EROs associated with fuel and oxidizer mitigation systems.

3.2.1 Replace Hydrazine Incinerators with Bubble Cap Scrubbers

At SLC-4, hydrazine-based fuel is used for Titan II and Titan IV boosters. When the launch vehicle is ready to be fueled, the fuel is pumped from a storage tank into the vehicle, using a closed-loop system to vent the tank as it empties. As the tank empties of fuel, it becomes full of nitrogen gas which is saturated with fuel vapors. However, before the tank can be refilled, the saturated nitrogen gas must be expelled. Hydrazine is very corrosive and is considered hazardous, so expelling this gas directly to the environment is unacceptable.

Currently, SLC-4 uses propane incinerators to remove the hydrazine from the nitrogen gas by combustion. There are two incinerators in use at SLC-4; one is on the East Pad (SLC-4E), and one is on the West Pad (SLC-4W). They were specifically designed for this purpose by Trane (La Crosse, WI) and originally installed about 10 years ago at another launch complex. Approximately two years ago, they were no longer needed at that location and were moved to SLC-4.

Although this system is effective at destroying hydrazine, it has several drawbacks:

1. The incinerators, by their very nature, release various products of combustion that are detrimental to air quality. The incinerators are each permitted to operate only 144 hours per year to keep yearly emissions at a level acceptable to the Santa Barbara Air Pollution Control District (SBAPCD). This limits launch operations flexibility.

2. The incinerators are moderately energy intensive. They use approximately one gallon of propane per minute, which is equivalent to 8640 gallons of propane per year per incinerator if they operated all permitted hours. In addition, a 10 HP electric blower aids in exhausting gas from the incinerator.

3. Incinerator reliability is questionable. Each incinerator requires the near-constant attention of four operational personnel. The incinerators also require a warm-up and cool-down period to avoid damage to the thermally sensitive refractory insulation.

4. The incinerators are maintenance-intensive. Since they are outdoors, they are constantly subjected to the corrosive effects of sea fog. This tends to cause moisture to build up in the brittle ceramic portions of the incinerators and various metallic parts to rust over time. This effect can be slowed by firing the incinerators periodically between

launches to dry them out, as is currently done about once a month for each incinerator. However, various metallic parts still have to be replaced on a regular basis.

On another part of VAFB, the Hypergolic Stockpile Storage Facility (HSSF), an entirely different approach is used to deal with hydrazine destruction. A water-based scrubber system is used, which was designed several years ago by the Illinois Institute of Technology Research Institute (IITRI - Chicago, IL) for the Space Shuttle program. The scrubber consists of a column containing 21 stacked trays of bubble caps (trays with small capped vents that allow gases to bubble upward from tray to tray but prevent liquid flow downward from tray to tray). Water trickles slowly through the scrubber from top to bottom, while the gas stream containing the fuel vapor flows from the bottom of the column to a vent at the top. At each tray, the gas comes into contact with the water, where a portion of the fuel is absorbed by the water. The scrubber design is elegant, simple, and effective.

In May 1984, a prototype was built and tested at White Sands Test Facility in New Mexico. The test results showed the ability to remove 99.99% of both hydrazine and monomethylhydrazine from a flue gas stream, which is well within levels acceptable to the SBAPCD (TP-WSTF-357, 1984; TR-357-001, 1984; TR-628-001, 1992).

The waste water from the scrubber is then collected in a storage tank for treatment by a separate Hydrazine Waste Water Treatment System (HWWTS). The HWWTS uses a combination of ozone and ultraviolet light to reduce hydrazine concentrations in the water to less than 5 parts per billion (ppb) and N-nitrosodimethylamine concentrations (a byproduct of the reaction) to less than 100 parts per trillion (ppt). The existing HWWTS system has the capacity to provide hydrazine waste water treatment for the entire Base.

A scrubber system has several advantages over the propane incinerators:

1. A scrubber uses very little energy. It uses no fossil fuels, and the only electrical energy used is to operate the water pump (about 0.75 hp). In addition, it requires no warm-up or cool-down period.

2. Scrubber operation is simple. The test report from White Sands shows that the scrubber system is effective over a wide range of operating conditions, including varying fuel concentrations, gas flow rates, and

water flow rates. Thus, the system does not have to be watched and tuned constantly to achieve desired performance. Theoretically, each scrubber would only require one operator, but VAFB safety regulations mandate that two operators be present during operation.

3. A scrubber is easy to maintain, requiring the replacement of a water filter once a month.

4. A scrubber has less environmental impact compared to incinerators. Its only emission is waste water, which is easily contained, monitored, and treated. Both the scrubber at HSSF and the HWWTS can be permitted by the appropriate environmental agencies for use.

The one disadvantage of the scrubber system is its high first cost because it is custom-designed equipment. Although the engineering feasibility of such a system is complete, custom fabrication is still required.

Assumptions

The following assumptions were made:

- A generic fully-burdened labor rate of $50 per hour was assumed for craftspersons and equipment operators, based on an average from Means Cost Data for California and past experience at other government sites.

- Both propane incinerators are used at their maximum permitted level of 144 hours per year. This includes the time for warm-up and cool-down, as well as periodic drying between uses.

- The age of the incinerators is 30 years.

- The life expectancy of the incinerators is 10 years.

- The replacement cost of each incinerator is $109,500 as escalated from $73,000 (1982$) for materials and $4,000 for labor (assuming 80 hours of craft-labor time).

- The yearly operating cost for each incinerator is $28,800 (assuming four operators).

- The yearly maintenance costs for each incinerator is $7,800 (assuming eight hours per month for maintenance and $3,000 for parts).

- The scrubbers will be used the same amount of time as the incinerators, and will not be running between uses. In actuality, this estimate is conservative because the scrubber does not require the same warm-up and cool-down periods as the incinerator, nor does it require periodic maintenance operation between launches.

- The life expectancy of the scrubber is 15 years.
- The installed cost of the scrubber is $422,200, which includes the scrubber equipment cost, as escalated from $300,000 (1984$), labor and water tie-in ($13,000), and installation drawings and documentation ($10,000).
- The yearly operations cost for each scrubber is $14,400, assuming two operators.
- The yearly maintenance cost for each scrubber is $100, assuming one hour labor and one water filter per month.
- The production of waste water from the scrubbers will not cause an appreciable increase in processing activity and cost at the HWWTS.
- Due to the difficulty of quantifying and obtaining the information, environmental permitting costs were not considered in the scrubber economic analysis and are assumed to be zero.

Results

Quantitative results of the analysis of this ERO are presented in Table 3.1. Table 3.1 contains specific energy, cost, and economic performance data for the two launch pads at SLC-4. It has potential applicability anywhere hydrazine-based fuel is used, and is particularly attractive where incineration methods are used for hydrazine destruction. However, due to the sensitive nature of VAFB launch processes, specific information was not available regarding which of the other SLCs used hydrazine-based fuel. Sources at VAFB indicate that, although the newer vehicles will tend to use liquid oxygen and hydrogen (LOX H_2) fuels, there will continue to be a need for vehicles which use hydrazine-based fuels at VAFB, and that this need will remain fairly constant for the foreseeable future.

Budget Implications. The estimated initial cost of replacing both propane incinerators at SLC-4 with bubble cap scrubbers is $844,400.

Energy and Cost Savings. It is estimated that this ERO will result in annual electrical energy savings of 2,336 kWh and propane savings of 1,642 MBTU, at a total cost savings of $10,916 per year.

Operations and Maintenance. Total operations and maintenance cost savings for this ERO are estimated to be $44,200 per year.

TABLE 3.1. Fuel and Oxidizer Vapor Mitigation Process EROs

ID	ERO Description	Bldg Type/ Location	Fuel Type(s)	Installed Cost ($)	Annual Energy Savings	Annual Cost Savings: Energy ($)	Annual Cost Savings: O&M($)	Life-Cycle Cost: NPV ($)	Life-Cycle Cost: Value Index
1	Replace Hydrazine Incinerators with Bubble Cap Scrubbers	Launch, SLC-4E & 4W Launch Pads	Electricity and Propane	844,400	1,642 MBtu plus 2,338 kWh	10,916	44,200	69,405	0.08
2a	Replace Oxidizer Burner with Oxidizer Scrubber (Stage 1 only)	Launch, SLC-4W Launch Pad	Electricity and Propane	353,000	222 MBtu plus (632 kWh)	1,461	(25,100)	(768,538)	NA
2b	Replace Oxidizer Burner with Oxidizer Scrubber (Stages 1 and 2)	Launch, SLC-4W Launch Pad	Electricity and Propane	473,000	222 MBtu plus (632 kWh)	1,461	(31,600)	(1,021,539)	NA
2c	Replace Oxidizer Burner with Oxidizer Scrubber (Stages 1 and 2, with waste treatment)	Launch, SLC-4W Launch Pad	Electricity and Propane	473,000	222 MBtu plus (632 kWh)	1,461	(22,600)	(889,448)	NA

Notes: NA: Not Applicable - the VI is not relevant for EROs with negative NPVs.

Process Safety and Reliability. The safety and reliability of hydrazine destruction at SLC-4 will be increased by implementation of this ERO.

Environmental Issues. This ERO will result in the complete elimination of fossil fuel emissions produced by the hydrazine incinerators at SLC-4.

Sources. The following sources were used for the assumptions and data presented in this ERO:

- Hydrazine incinerators:
  Russ Sharer, Mechanical Engineer
  Martin-Marietta
  SLC-4, Vandenberg AFB 93437
  (805) 734-8232, Ex. 6-1568

- Bubble Cap Scrubber/HWWTS:
  Fred Sobottka, Project Engineer
  The Aerospace Corporation
  Vandenberg AFB, CA 93437
  (805) 734-8232, Ex. 6-7996

  Jim Kephart
  Environmental Systems Directorate
  Space Launch Operations
  The Aerospace Corporation
  El Segundo, CA 90009-2957
  (310) 336-6435

3.2.2 Replace Oxidizer Burner at SLC-4W with Oxidizer Scrubber

In addition to fuel, an oxidizer is required to support the combustion of a rocket propellent in space. This oxidizer is loaded into the vehicle prior to launch in a manner similar to the one described for the fuel. In this case, however, the residual vapors contain large concentrations of NO_x (oxides of Nitrogen) which must be mitigated.

At the SLC-4W launch pad, the NO_x is mitigated with propane flare system, or "burner". At the SLC-4E launch pad, the existing burner was recently removed and replaced with a single-stage scrubber. This scrubber was designed in 1984, and the design is in use elsewhere at VAFB as well as at the Cape Canaveral launch facilities in Florida.[a]

There are advantages and disadvantages to each system, and some of the strongest are related to environmental and maintenance issues rather than energy conservation issues. Although the focus of this assessment is the characterization and identification of potential process energy savings at VAFB, the energy and environmental issues involved are interwoven and cannot be easily separated. There is not agreement on the many of the details required for an accurate economic comparison of the two systems, which further complicates analysis. With this in mind, each system's advantages and disadvantages are outlined below, using the best available information.

The burner at the West Pad (SLC-4W) has been in use for approximately 30 years, which is well beyond its original life expectancy of 10 years. It is simple to operate. It consumes no electrical energy, and a very small amount of propane (1.3 lb per minute or about 0.27 gallon per minute). Maintenance consists of replacing a 2-inch motor-operated fuel valve every two to three years, and replacing a spark plug each launch cycle. Thus, the burner has the advantage of having a low annual operating, maintenance, and energy costs. The burner has the following disadvantages:

(a) Personal communication with Fred Sobottka, Project Engineer; The Aerospace Corporation; Vandenberg Air Force Base, California; August 21, 1992.

1. Since it burns propane, it releases products of combustion considered to be detrimental to air quality. The burner is currently permitted by the SBAPCD to operate 144 hours per year, which limits launch operations flexibility.

2. Martin Marietta test data (reference unavailable) indicates that as the vent flow rate increases, burner efficiency decreases. In an emergency situation, sharply increased flow rates can cause "flame-out" to occur, which can create the potential for sizeable air emissions of NO_x. (The emissions are currently controlled by an electronic eye, which automatically shuts off the vent stream in the event of flame out at the SLC-4W burner. However, shutting off the vent stream requires that the system be purged of vapors, which must then be vented to atmosphere). The SBAPCD requires Best Available Control Technology (BACT) at VAFB for both fuels and oxidizers; as such, there are indications that the burner should be replaced with a more dependable and lower emission technology.

The existing burner at the East Pad (SLC-4E) was recently replaced by the single-stage scrubber to allow for new payload flow requirements which exceeded the capacity of the burner. The scrubber is basically a reservoir tank with four packed columns containing polypropylene rings. The polypropylene rings are continuously sprayed with a mist of sodium hydroxide (NaOH), while the vent gas is passed over the rings from the bottom to the top of the vessel. The NO_x reacts with the sodium hydroxide to form nitrates, and the vent gas leaves the scrubber with NO_x emissions reduced to between 700 and 5000 ppm.

The primary advantage of the single-stage scrubber system is environmental. The scrubber produces a liquid waste, which is more readily contained, monitored, treated, and disposed than a gaseous effluent. It is new and more efficient technology, and satisfies the current regulations for oxidizer mitigation over a wide range of operating parameters.

In addition, in anticipation of stricter environmental guidelines, a second-stage scrubber has been designed for use with the first stage to reduce NO_x emissions even further to less than 30 ppm. This second-stage "sparged" scrubber is in the process of being tested for use at the HSSF, and a prototype is due to be built soon, contingent on funding. It operates passively by allowing the vent gas to pass through an aqueous solution of sodium hydroxide and sodium sulfite (Na_2SO_3) as minute bubbles. The second stage scrubber has the potential to reduce the NO_x emissions for each Titan IV launch from

45-50 pounds to less than one pound. Additional benefits include reduced wind-related restraints (which can limit activities during the launch process) as well as the total elimination of the visible plume under all flow conditions.

While the scrubber system is environmentally attractive, it has some disadvantages:

1. The first-stage scrubber is currently seen by the personnel at SLC-4 as having a high maintenance cost. Since it was originally designed for use at Cape Canaveral in Florida, and there is heat released in the reaction between the oxidizer and the NaOH, a glycol cooling loop was included in the original scrubber design to ensure that the efficiency of the scrubber was not compromised while operating during hot weather. The scrubber at SLC-4E, in keeping with the original design, has an evaporative water loop which removes heat from a glycol loop used to cool the scrubber liquor. The water loop, the glycol loop, and the scrubber itself have electrical pumps which must run to circulate the liquids for an adequate exchange of heat. Maintenance of the pumps, and the other equipment associated with these cooling loops, is frequent according to personnel at SLC-4.

   However, Jim Kephart of The Aerospace Corporation[(a)] says that the requirement for cooling is unnecessary, based on test results. Several scrubbers of this type have been tested over a wide range of operating temperatures, and the results show no difference in efficiency or outlet concentrations of pollutants in the waste water. The elimination of cooling requirements would represent a major reduction in the operations and maintenance cost, as well as energy consumption of a new installation. (It is not possible to remove the requirement for cooling on existing installations without acquiring new environmental operating permits, which can impact the cost-effectiveness of such a measure).

2. The first-stage scrubber is seen by the personnel at SLC-4 as having a high cost of operation because four people are currently required to operate the scrubber during a launch (as compared to the two required to operate the burner). This is primarily because the scrubber liquor is monitored closely to ensure that it does not become depleted or excessively hot. Depletion of the liquor seriously affects the efficiency of the scrubbing operation and must be closely monitored. However, if there is no need for cooling the scrubber liquor, and temperature monitoring becomes unnecessary, the number of operators could possibly be reduced to two.

(a) Personal communication with Jim Kephart; Environmental Systems Directorate; Space Launch Operations; The Aerospace Corporation; El Segundo, CA; October 22, 1992.

The Aerospace Corporation is currently developing a simplified field test to measure the sulfite concentration (a measure of depletion) in the second-stage scrubber liquor, which will further simplify operations.

3. As an additional precaution against the depletion of the first-stage scrubber liquor, the spent liquor is changed out at the end of each launch. Currently, SLC-4 hires one contractor to drain and dispose of the spent liquor, and a different contractor to fill the scrubber with new liquor. This hazardous waste removal cost is currently a normal part of the operations and maintenance of the scrubber.

   The Aerospace Corporation is investigating alternatives to the current practice of spent liquor disposal. One approach is to treat the spent liquor by acid addition. The addition of acid to the scrubber liquor would neutralize the residual caustic and resulting solution and could either be evaporated in a pond or further treated for reuse in other processes (by solids removal). Another approach is to use the spent liquor in the existing heavy-metal waste water treatment process, which requires the addition of sodium hydroxide (which would precipitate out the undesirable salts). In any case, if spent liquor treatment/recycling was available at VAFB, the cost of off-site hazardous waste disposal would be eliminated. The additional operating cost at the treatment facility would be very small.

4. The scrubber system is custom-designed equipment, and although engineering feasibility studies have already been done, the equipment must be custom-fabricated. Thus, it has a relatively high first cost.

   Assumptions

   The following assumptions were made:

- A generic labor rate of $50 per hour was assumed for craftspersons and equipment operators, based on an average from Means Cost Data (Means 1991) for California and past experience at other government sites. The labor rate includes overheads and profit.

- A rate of 1.5 Titan II launches per year is assumed, which is one-half the worst case scenario (USAF 1990).

- The burner is used 144 hours per year, its maximum SBAPCD permitted use.

- The age of the burner is 30 years, and the life expectancy is 10 years. The life expectancy is relatively short due to the adverse environmental conditions to which it is exposed (sea fog, heat cycling, etc.).

- Although there is a spare burner available at SLC-4E, this will not be taken into account for spare parts since its life expectancy has also expired.

- The replacement cost of the burner is approximately $32,000, which includes $25,000 equipment cost, $2,000 delivery, $5,000 for installation. This rough estimate was provided by Hirt Combustion Engineers (Montebello, CA). Maintenance, operating, and energy costs are assumed to remain the same.

- The yearly operating cost for the burner is $14,400 (assuming two operators).

- The yearly maintenance cost for the burner is $800 (assuming four hours of maintenance per launch cycle, 1.5 launches per year, and $1,000 every two years for parts).

- The scrubber will be used the same amount of time as the burner, and will not be running between actual uses. All estimates dealing with equipment costs, operating costs, and maintenance costs for the first-stage scrubber will assume that the glycol and evaporative water cooling loops are not required at SLC-4W.

- The life expectancy of both stages of the scrubber system is 15 years.

- The total installed cost of the first-stage scrubber is estimated at $353,000, which includes the cost of the equipment - $333,000, as escalated from $250,000 (1984$), the cost of the electrical tie-in for the pump and labor ($10,000), installation drawings and documentation ($10,000). This assumes a concrete pad of adequate size and all other services are existing at SLC-4W.

- The total installed cost of the second-stage scrubber is estimated at $120,000, which includes the cost of the equipment ($100,000), labor and extending the existing concrete pad ($10,000), installation drawings and documentation ($10,000).

- The pump for the first-stage scrubber is rated at 5 hp (assumed 85% efficient). There is no energy consumption by the second-stage scrubber.

- The yearly operations cost for the scrubber system (total for both stages) is $14,400, assuming 2 operators. It is assumed that two operators are required whether the second stage is present or not.

- The yearly maintenance cost for the first-stage scrubber is estimated at $25,900, which includes $16,000 for pump maintenance and calibration of the instrumentation, as well as $6,600 per launch

for liquor disposal and reloading (assuming 1.5 launches per year). The cost of liquor disposal ($4,000 per launch) is expected to be eliminated if a waste treatment permit is put into place.

- The yearly maintenance cost for the second-stage scrubber is estimated at $6,500, which includes $1,600 for equipment maintenance and calibration of the instrumentation, as well as $3,300 per launch for liquor disposal and reloading (assuming 1.5 launches per year). The cost of liquor disposal ($2,000 per launch) is expected to be eliminated if a waste treatment permit is put into place.

- Due to the difficulty of quantifying and obtaining the information, environmental permitting costs were not considered in the scrubber economic analysis, although they may be significant.

Results

Quantitative results of the analysis of this measure are presented in Table 3.1. Table 3.1 contains specific energy, cost, and economic performance data for SLC-4W using three scenarios: installation of the first-stage scrubber only, installation of the first and second stages, and installation of the first and second stages with waste liquor treatment available. This measure has potential applicability anywhere a similar type of oxidizer is used, and is particularly attractive where incineration methods are used. However, due to the sensitive nature of VAFB launch processes, specific information was not available regarding applicability at other SLCs.

Budget Implications. The estimated initial cost of replacing the oxidizer burner at SLC-4W with the first-stage scrubber is $353,000. If the second-stage is installed also, the estimated initial cost will increase to a total of $473,000.

Energy and Cost Savings. This measure will result in a small annual energy savings of $1,461.

Operations and Maintenance. There will be a significant increase in operations and maintenance costs if any part of this measure is implemented. The increase in O&M cost is much larger than the energy savings, thus making it difficult to recommend this measure based on energy or cost savings.

Environmental Issues. This measure will result in the complete elimination of fossil fuel emissions produced by the oxidizer burner at

SLC-4W. A recommendation to replace the burner with the scrubber system can be made on the basis of NO_x emissions as related to the BACT requirement.

Sources. Sources for the assumptions and data presented in this measure are as follows:

- Oxidizer Burner:

  Russ Sharer, Mechanical Engineer
  Martin-Marietta SLC-4,
  Vandenberg AFB, CA 93437
  (805) 734-8232, Ex. 6-1568

- First and Second-Stage Scrubber:

  Fred Sobottka, Project Engineer
  The Aerospace Corporation
  Vandenberg AFB, CA 93437
  (805) 734-8232, Ex. 6-7996

  Jim Kephart
  Environmental Systems Directorate
  Space Launch Operations
  The Aerospace Corporation
  El Segundo, CA
  (310) 336-6435

3.3 GASEOUS NITROGEN SYSTEMS

Gaseous nitrogen is used at both the SLC-4E and SLC-4W launch pads for three basic purposes:

1. To perform pumping, inerting, and/or ventilating functions around potentially explosive materials, such as hydrazine vehicle fuel.

2. To purge electrical equipment enclosures in Class 1 Division 2 areas (areas potentially containing explosive vapors).

3. To operate pneumatic tools and perform other non-hazardous activities.

Gaseous nitrogen can be viewed as a utility of sorts at SLC-4, because it is used as an energy source to perform work. Using gaseous nitrogen in this manner is similar to using compressed air, except that cost and safety considerations are quite different.

SLC-4 receives nitrogen from a Linde extraction plant approximately four miles from the SLC. The plant was originally built to support missions at

SLC-4 and SLC-6, but since the Space Shuttle mission at VAFB was cancelled, the Linde plant currently provides nitrogen to SLC-4 only. The plant has the capability of extracting gaseous nitrogen from the air at a maximum rate of 40,000 standard cubic feet per hour (SCFH), or it can produce gaseous nitrogen from liquid nitrogen at a much higher rate. Its current mode of operation is to convert liquid nitrogen to gas, although sources at Kelly Air Force Base, which holds the nitrogen contract for the entire U.S. Air Force, indicate that it would be more economical to extract nitrogen from air, considering SLC-4's present level of usage. Sources at SLC-4, however, indicate that there were problems with nitrogen being contaminated when this process was used in the past, so they have mandated that the plant use liquid nitrogen only.

From October 1991 to September 1992, the plant delivered 9,936.79 tons of gaseous nitrogen to SLC-4. Since VAFB currently pays $68 per ton for liquid nitrogen, this translates to a cost of $675,699. Key personnel at SLC-4 estimate that 80% of the nitrogen (exclusive of unintentional leaks) is used for functions which mandate the use of an inert gas, and the remaining 20% is used for functions which could be performed safely with compressed air. Thus, EROs were pursued in two separate areas:

1. Identifying maintenance opportunities that improve the efficiency of the nitrogen or compressed air distribution system and loads.

2. Identifying opportunities to substitute compressed air where safety or quality of operations would not be compromised.

Three ERO scenarios are presented to illustrate the interdependence and cost trade-offs of these two approaches to nitrogen cost savings.

3.3.1 Improve Efficiency of Nitrogen Distribution System (Alone)

The Linde Plant delivers 6,000 psig gaseous nitrogen to SLC-4E and SLC-4W. Figure 3.1 shows a simplified layout of the major nitrogen uses at both SLCs (backup storage tanks and accumulators are not shown). There are over 3,200 components and 45,000 feet of tubing associated with the nitrogen distribution system at SLC-4, so the system is much more complex than Figure 3.1 indicates.

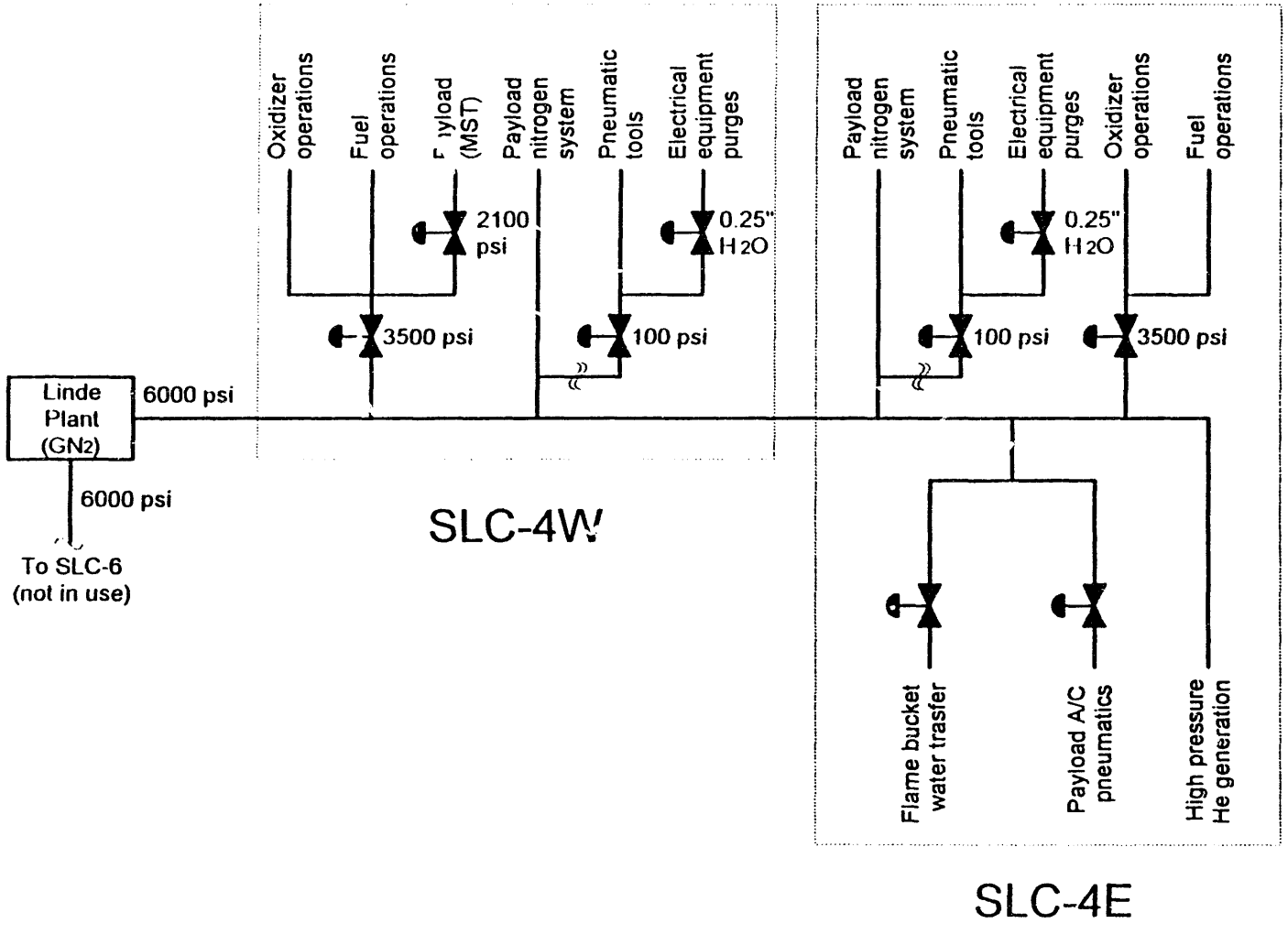

FIGURE 3.1. SLC-4 Gaseous Nitrogen Distribution System

Leaks in compressed gas distribution systems can be caused by poor design/installation and inadequate maintenance. Some common design/installation problems are:

1. Overstressed or misaligned pipe joints caused by dead weight, improper pipe length, thermal expansion in long runs (especially in areas where ambient temperature varies widely), and vibration.

2. Improper installation; lack of gaskets at flanges or sealing compounds at joints.

3. Lack of bypass valves and piping for equipment isolation and maintenance.

4. Using a higher pressure than actually required by the end-use.

Regular maintenance activities should include the following:

1. Check pneumatic valves and cylinder packing for dirt and grit. This prevents leaks and premature seal wear.

2. Ensure hose, hose clamps, quick disconnects, and couplings are in good repair, rated for the pressure used, and not leaking.

3. Check safety relief valves to ensure they are functioning at the correct pressure and are seated properly.

4. Inspect check valves for back-flow leakage.

5. Inspect tool valves and other valves for leakage.

6. Inspect distribution lines for physical disturbance.

7. Inspect purged electrical equipment enclosures for gasket integrity and unintentional leaks.

While a detailed analysis of the entire nitrogen distribution system at SLC-4 is not within the scope of this assessment, experts at the University of Wisconsin Energy Technology Center estimate that plants without a regular maintenance program for their compressed gas systems lose approximately 15% through unintentional leaks (see Figure 3.2). If this number holds true for SLC-4, and 67% improvement in this number of could be made through upgrades and maintenance activities, $67,600 in nitrogen costs could be saved

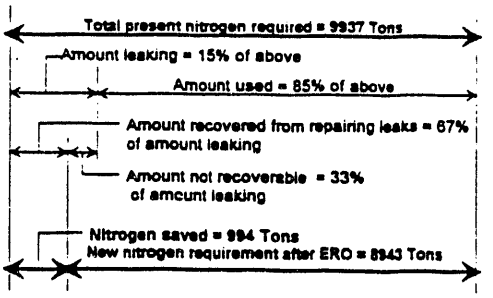

Graphic Display of Annual Nitrogen Savings Presented by Improving Nitrogen Distribution Efficiency

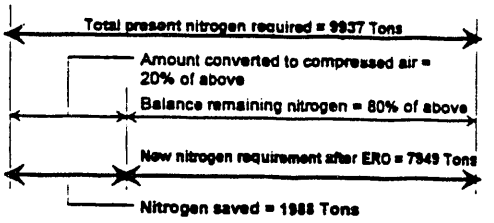

Graphic Display of Nitrogen Savings Presented by Converting Some Usage to Compressed Air

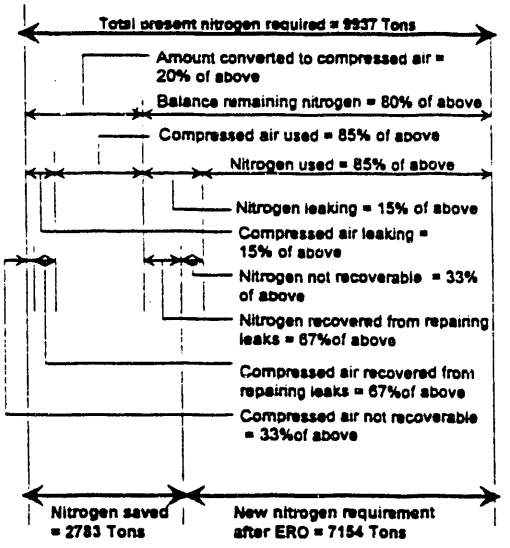

Graphic Display of Annual Nitrogen Savings Presented by Improving Nitrogen Distribution Efficiency and Converting Some Usage to Compressed Air

FIGURE 3.2. SLC-4 Nitrogen Savings Diagrams

each year (a 67% improvement would be required to reduce the leakage to 5%, which is what the University of Wisconsin Energy Technology Center considers feasible for compressed air plants).

This ERO proposes that the maintenance activities listed above be undertaken to eliminate as many nitrogen leaks as possible.

Assumptions

The following assumptions were made:

- A generic labor rate of $50 per hour was assumed for craftspersons and equipment operators, based on an average from Means Cost Data (Means 1991) for California and past experience at other government sites. The labor rate includes overheads and profit.

- The costs for liquid nitrogen are as follows[a]:

1992	$68.00 per ton
1993	$71.35 per ton (projected)
1994	$73.50 per ton (projected)
1995	$74.60 per ton (projected)

Since the lifetime of this study is 25 years, a best-fit curve was used to predict costs past 1995.

- It is assumed that there is currently no regular maintenance program for the nitrogen distribution system, which implies that there are no regular labor or equipment costs.

- Upon implementation of this ERO, it is anticipated that maintenance activities will be more extensive the first year while equipment is inspected, upgraded, or replaced. In the follow-on years, the maintenance activities will primarily consist of inspection. Assuming that a craftsperson can inspect and repair 100 feet of tubing/piping (with associated components) per day, the first year's labor costs would be $180,000 (assuming the entire 45,000 feet of nitrogen distribution system is inspected/repaired the first year). In following years, a craftsperson should be able to inspect and repair 400 feet of tubing/piping per day (assuming most leaks will be fixed in the first year), which reduces the annual labor rate to $45,000.

(a) Personal Communication from Verna Thompson, Kelly AFB, Texas.

- It is anticipated that material costs will be substantially more the first year than in follow-on years. If material costs are 10% of labor costs, then the first year's costs would be $18,000, and subsequent years would be $4,500.

- Due to the nature of this ERO, life expectancy beyond 25 years and installed costs are not considered in the economic analysis.

Results

Quantitative results of the analysis of this ERO are presented in Table 3.2. Table 3.2 contains specific cost and economic performance data. This ERO has potential applicability anywhere gaseous nitrogen is distributed and used. However, due to the sensitive nature of VAFB launch processes, specific information was not available regarding use at other SLCs.

Budget Implications. Although this ERO will probably not require any new equipment installation, there is a first cost associated with the increased level of repair and maintenance required during the first year ($148,500 over and above regular maintenance and inspection activities).

Energy and Cost Savings. This ERO will save approximately $67,600 in nitrogen costs per year.

Operations and Maintenance. This ERO will increase maintenance costs, considerably, since there is little regular maintenance done on the system at present. First year maintenance costs (including labor and materials) will be $180K and then reduce to $49,500 thereafter.

Process Safety and Reliability. This ERO will actually enhance process safety and reliability, since it will involve the upgrade of a safety system. It will also reduce unintentional leaks which may be in areas where nitrogen accumulation could be hazardous.

Environmental Issues. This ERO has no environmental impact.

Sources. Sources for the assumptions and data presented in this ERO are as follows:

- Electrical Equipment Purges

  John More, Electrical Engineer
  Martin-Marietta
  SLC-4, Vandenberg AFB, CA 93437
  (805) 734-8232, Ex. 6-1599

  Lee Owens, Titan IV Program Engineer
  Martin-Marietta
  SLC-4, Vandenberg AFB, CA 93437
  (805) 734-8232, Ex. 5-2919

- Nitrogen Cost Data

  Verna Thompson, Contracts Department
  Kelly Air Force Base, TX 78241-5000
  (512) 925-7248

- Nitrogen Usage Data for SLC-4

  Susan Perkins
  Jacobs Engineering
  Vandenberg AFB, CA 93437
  (805) 734-8232, Ex. 5-8404

3.3.2 Install Electric Air Compressors for Electrical Equipment Purges and Pneumatic Tools at SLC-4E

Key personnel at SLC-4 estimate that 20% of the nitrogen at SLC-4 is used for electrical equipment purges and for pneumatic tool operation at SLC-4E. If unintentional leakages are subtracted from the total nitrogen use, then 20% of the remaining nitrogen use represents approximately $115,000 per year (see Figure 3.2).

Key personnel at SLC-4 also estimate that the vast majority of this usage is for electrical equipment purges at SLC-4E (about 90%). Purging electrical equipment enclosures is an approved way of complying with Article 500 of NFPA 70, which addresses electrical equipment installations in Class 1, Division 2 hazardous areas (areas where combustible gasses may exist (NFPA 1990). Electrical enclosures within the Mobile Service Tower (MST) and within a 200-foot radius of the launch pad are considered to be in this category.

NFPA 496 gives detailed requirements regarding electrical equipment purges. The type of purging used at SLC-4 is classified at Type 2, which reduces the classification of the enclosure from Division 2 to non-hazardous (NFPA 1989). The benefits of this type of purging are many:

1. Standard NEMA (National Electrical Manufacturers Association) Type 4 or Type 12 enclosures may be used in lieu of explosion- proof enclosures. Explosion-proof enclosures are expensive and are not always available in appropriate configurations and sizes.

2. Purges are designed to prevent, rather than contain, an explosion.

3. Since positive pressure and airflow is maintained with a dry gas, corrosion and moisture problems are eliminated. This is especially important at VAFB, with ubiquitous and corrosive sea fog.

An alternative to purging is the use of explosion-proof enclosures or intrinsic safety barriers (for certain types of instrumentation only). Key personnel indicate that the vast majority of electrical enclosures at SLC-4W are already protected in this manner. The obvious benefit of this approach is that it uses no energy, but due to the complexity of the system, there was insufficient information to determine the cost savings of replacing the purges at SLC-4E with explosion-proof enclosures or using intrinsic safety barriers. However, a more detailed examination of this approach should be made before finalizing the air compressor design recommended in the following paragraphs.

NFPA 496 allows the purge gas to be either an inert gas or instrument-grade compressed air (NFPA 1989). No particular flow rate is required through the enclosure as long as a minimum of 0.1 inches H_2O pressure is maintained. Bebco Industries, Inc., manufacturer of the purges used by SLC-4, recommends 0.25 inches H_2O as a safety factor. Since nitrogen was already required for propellant and payload operations at SLC-4, it was convenient at the time of installation to use nitrogen for the electrical equipment purges as well as for the pneumatic tools.

However, after the system was in place, there was some concern about the safety of using nitrogen purges inside the MST because of the possibility of a build-up of nitrogen in enclosed spaces. A study determined that there was probably enough air flow in the MST to prevent this from happening, but key

personnel at SLC-4 indicate that safety officials were still concerned.[a] To this end, Stearns Roger (division of United Engineers and Constructors, VAFB) was contracted to design a compressed air system that would be used in place of nitrogen for the enclosure purges inside the MST only (the compressed air would not be used for the enclosure purges outside the MST or for the pneumatic tools). Stearns Roger completed a preliminary design in 1989, and two redundant 89 CFM (250 psig) air compressors were purchased (along with air dryers and surge tank), but the installation was never completed due to funding constraints. The installation cost was expected to be about $500,000, which included the erection of a small building for the compressors and the underground distribution lines required to service the MST in the service and parked positions.

This ERO proposes to upgrade the size of the compressor installation to handle the entire SLC-4E electrical equipment purging system as well as the pneumatic tools. It is estimated that this would require another pair of redundant 89 CFM compressors and this should increase installation cost by approximately 20%.

Assumptions

The following assumptions were made:

- A generic fully-burdened labor rate of $50 per hour was assumed for craftspersons and equipment operators, based on an average from Means Cost Data for California (Means 1991) and past experience at other government sites.
- The costs for liquid nitrogen are as follows:

1992	$68.00 per ton
1993	$71.35 per ton (projected)
1994	$73.50 per ton (projected)
1995	$74.60 per ton (projected)

Since the lifetime of this study is 25 years, a best-fit curve was used to predict costs past 1995.

(a) Personal communication with Dave Johnson; Martin-Marietta; SLC-4; Vandengberg Air Force Base, California.

- The estimated installation cost ($610,000) includes labor and the purchase of all materials except the compressors, air driers, and surge tank. It also includes the cost of a change to the existing design drawings. The equipment cost (total of $176,000) includes the cost of two compressors, two air driers, and an additional or larger surge tank. The cost of the two existing compressors and associated equipment is not included. Together, these costs comprise the first cost of this ERO ($786,000).

- Since the life expectancy of the compressors is 12.5 years and each pair of compressors will run the equivalent of 50% of the time, compressor replacement cost will not be considered in this study because they will not need to be replaced during the 25 year analysis period.

- The compressors are 40 hp each (assumed 85% efficient); two will operate continuously. It is assumed that the dryer power requirement is negligible in comparison to the compressor power requirement.

- The total annual maintenance cost is estimated to be $4,000, which includes labor and equipment for compressor rebuilds and tune-ups (every 2.5 years of operation), dryer rebuilds (every 2.5 years of operation), desiccant replacement (every 2.5 years of operation), oil and filter replacement (every year of operation). This assumes that all four compressors are all operated an equal amount of time each year.

- Since the compressors will operate automatically, there are no operation costs.

- Given average levels of maintenance, the life expectancy of the compressors is 12.5 years.

Results

Quantitative results of the analysis of this measure are presented in Table 3.2. Table 3.2 contains specific cost and economic performance data. This measure has potential applicability anywhere gaseous nitrogen is used for electrical equipment purging, pneumatic tools, or other applications where the substitution of compressed air would not impact safety or quality of operations. However, due to the sensitive nature of VAFB launch processes, specific information was not available regarding direct applicability at other SLCs.

Budget Implications. The installed cost of this ERO is estimated to be $786,000.

Energy and Cost Savings. This ERO essentially trades off the cost of $34,800 (614.8 MWh, plus demand charges) in electrical energy for a savings of approximately $135,100 in nitrogen costs per year.

Operations and Maintenance. This ERO will increase maintenance costs, due to working with new equipment. The estimated annual maintenance cost is $4,000.

Process Safety and Reliability. This ERO will enhance process safety and reliability, since it will eliminate much of the chance of nitrogen building up in enclosed spaces in the MST.

Environmental Issues. With electric compressors there are no on-site fossil fuel emissions. Also, since the compressors will be located inside an unmanned building, the compressor operation noise (caused by the unloading of the compressors) is not likely to adversely impact the outside work environment.

3.3.3 Install Electric Air Compressors for Electrical Equipment Purges and Pneumatic Tools at SLC-4E, in Conjunction with Improving Distribution System Efficiency

If it is assumed that the distribution system efficiency is improved before or in conjunction with installing the air compressors, an entirely different economical result is achieved.

Assumptions

The following assumptions were made:

- The estimated first cost is assumed to be additive between the EROs. This cost is estimated to be $934,500.
- Maintenance is assumed to be additive between the two EROs. Thus, the total annual maintenance cost is estimated to be $53,500.
- Since the compressors will operate automatically, there are no operation costs.
- All other assumptions are the same as the previous two EROs.

Results

If the efficiency is improved, the total volume of nitrogen required will be reduced, and the overall nitrogen cost will be reduced to $608,100. If it is assumed that the old leakages were evenly distributed between end uses, then converting 20% of the new usage to compressed air represents a total annual nitrogen cost savings of $189,200 ($67,600 in nitrogen leaks, and $121,600 in switched usage; see Figure 3.2 for clarification). While the energy savings of this ERO are greater than others in this category, the net present value is considerably less than installing the air compressors without repairing the distribution system, which results from the relatively high cost of ongoing distribution system inspections and maintenance. Thus, from an NPV-basis alone, switching to compressed air alone is the most favorable choice. These results are summarized in Table 3.2.

Budget Implications. The installed cost of this ERO is estimated to be $934,500.

Energy and Cost Savings. This ERO essentially trades off the cost of $34,800 (614.8 MWh, plus demand charges) in electrical energy for a savings of approximately $189,200 in nitrogen costs per year.

Operations and Maintenance. This ERO will increase maintenance costs considerably, since it will require both the maintenance of new equipment and extensive inspection activities. The estimated annual maintenance cost is $53,500.

Process Safety and Reliability. This ERO will enhance process safety and reliability, since it will eliminate much of the chance of nitrogen building up in enclosed spaces in the MST.

Environmental Issues. Since the compressors are electric, there are no fossil fuel emissions (electric compressors were analyzed in lieu of natural gas compressors for this reason). Also, since the compressors will be located inside an unmanned building, the noise caused by the unloading of the compressors is not likely to adversely impact the outside work environment.

TABLE 3.2. Gaseous Nitrogen System Process EROs

ID	ERO Description	Bldg Type/ Location	Fuel Type(s)	Installed Cost ($)	Annual Energy Savings	Annual Cost Savings: Energy ($)	Annual Cost Savings: O&M ($)	Life-Cycle Cost: NPV ($)	Life-Cycle Cost: Value Index
3a	Improve Efficiency of Nitrogen Distribution System (Alone)	Launch, SLC-4E & 4W General	Gaseous Nitrogen	$148,500	994 T N_2	67,570	(49,500) after 1st year	116,712	0.79
3b	Install Electric Air Compressors for Electrical Equipment Purges and Pneumatic Tools (Alone)	Launch, SLC-4E General	Electricity and Gaseous Nitrogen	$786,000	1,987 T N_2 plus (614.8 MWh)	100,321	(4,000)	624,884	0.80
3c	Combination of 3a and 3b above	Launch, SLC-4E & 4W General	Electricity and Gaseous Nitrogen	$934,500	2,782 T N_2 plus (614.8 MWh)	154,377	(53,500) after 1st year	543,254	0.58

Sources. Sources for the assumptions and data presented in this ERO are as follows:

- Electrical Equipment Purges
  John More, Electrical Engineer
  Martin-Marietta
  SLC-4, Vandenberg AFB, CA 93437
  (805) 734-8232, Ex. 6-1599

  Lee Owens, Titan IV Program Engineer
  Martin-Marietta
  SLC-4, Vandenberg AFB, CA 93437
  (805) 734-8232, Ex. 5-2919

- Stearns-Roger Project
  Dave Johnson
  Martin-Marietta
  SLC-4, Vandenberg AFB, CA 93437
  (805) 734-8232, Ex. 6-8757

- Nitrogen Cost Data
  Verna Thompson, Contracts Department
  Kelly Air Force Base, TX 78241-5000
  (512) 925-7248

- Nitrogen Usage Data for SLC-4
  Susan Perkins
  Jacobs Engineering
  Vandenberg AFB, CA 93437
  (805) 734-8232, Ex. 5-8404

- Compressor Maintenance Data
  Kris Hulse
  Colorado Compressor, Inc.
  Denver, CO 80216-1528
  (303) 297-8100

3.4 CLEANROOM/CONDITIONED AIR SPACE EROS

Perhaps the greatest single process energy use at VAFB is the maintenance of environmentally conditioned air spaces for launch vehicles. The temperature requirements (usually between 50°F and 60°F) are not difficult to achieve in VAFB's temperate coastal climate, but the humidity requirements (usually between 35% and 50% relative humidity-RH) are more difficult to achieve without great energy expense. In addition, the pressure and/or airflow requirements can be very great, depending on the size and type of conditioned air space. With these requirements in mind, and recommendations made by the ASHRAE Heating, Ventilating, and Air-Conditioning Applications Handbook (ASHRAE 1991), EROs were sought in the areas of alternative fan technology, humidity control, and conditioned air recirculation.

3.4.1 Replace Steam Boilers in SLC-4E CE (Clean Enclosure) A/C System with Pneumatic Humidifiers

The SLC-4E MST is a 23-story, moveable tower which provides vehicle service access for approximately 45 days prior to each Titan IV launch. The top 13 stories constitute a 380,000 ft^3 clean enclosure with strict requirements for temperature control, humidity control, and air flow. The CE A/C system is relatively new (1988), and was designed with both efficiency and performance in mind. As shown in Figure 3.3, the airflow to the clean enclosure is supplied by two 300 HP fans in series (each fan has a redundant counterpart). Some of the most notable energy-efficient features of the system are:

- The use of energy efficient motors for the large fans.
- The use of chillers in conjunction with a reactivated industrial desiccant system for dehumidification.
- The use of heat recovery in the desiccant reactivation airstream.

- The use of a desiccant bypass for conditions not requiring dehumidification.
- The extensive use of computerized HVAC controls.
- The recirculation of 80% of the conditioned air.

At first glance, further energy savings opportunities in this system seemed unlikely. However, upon closer examination (and with a great deal of help from the SLC-4E HVAC engineer), one area of improvement was identified: a change to an alternative form of humidification.

During the winter months, and during Santa Ana wind/weather conditions, the outside air at VAFB can occasionally drop below 35% RH. Under these circumstances, additional humidification is required in the MST CE air conditioning (A/C) system. As shown in Figure 3.3 this humidification is provided by two natural gas steam boilers (one primary and one backup).

Since humidification must be supplied immediately upon demand, most users require both steam boilers to be fired and operational for the entire time that the CE A/C system is in use. This is inefficient since the steam humidification is rarely required or used. Also, the steam boilers are located a long distance from the point of utilization, and the heat loss through poorly insulated lines is substantial.

An alternate form of humidification which has been used in industrial applications is pneumatic humidification. This technology has been used successfully in semiconductor clean rooms, which have stringent requirements for humidity control and air contamination control. Humidification is accomplished using a bank of air/water duct atomizers, with humidistat feedback control. The only requirements are 32 psi potable water service and 30 psi compressed air, which are used only on demand. Nitrogen may be safely substituted for compressed air, since it only comprises a tiny fraction of the total duct air flow (the worst case would be 311 SCFM out of a total of 120,000 SCFM already available at SLC-4). The manufacturer states that the atomizer heads are self-cleaning, and do not require special water treatment or regular maintenance. However, SLC-4 engineering personnel believe that additional water filtration would be required at VAFB.

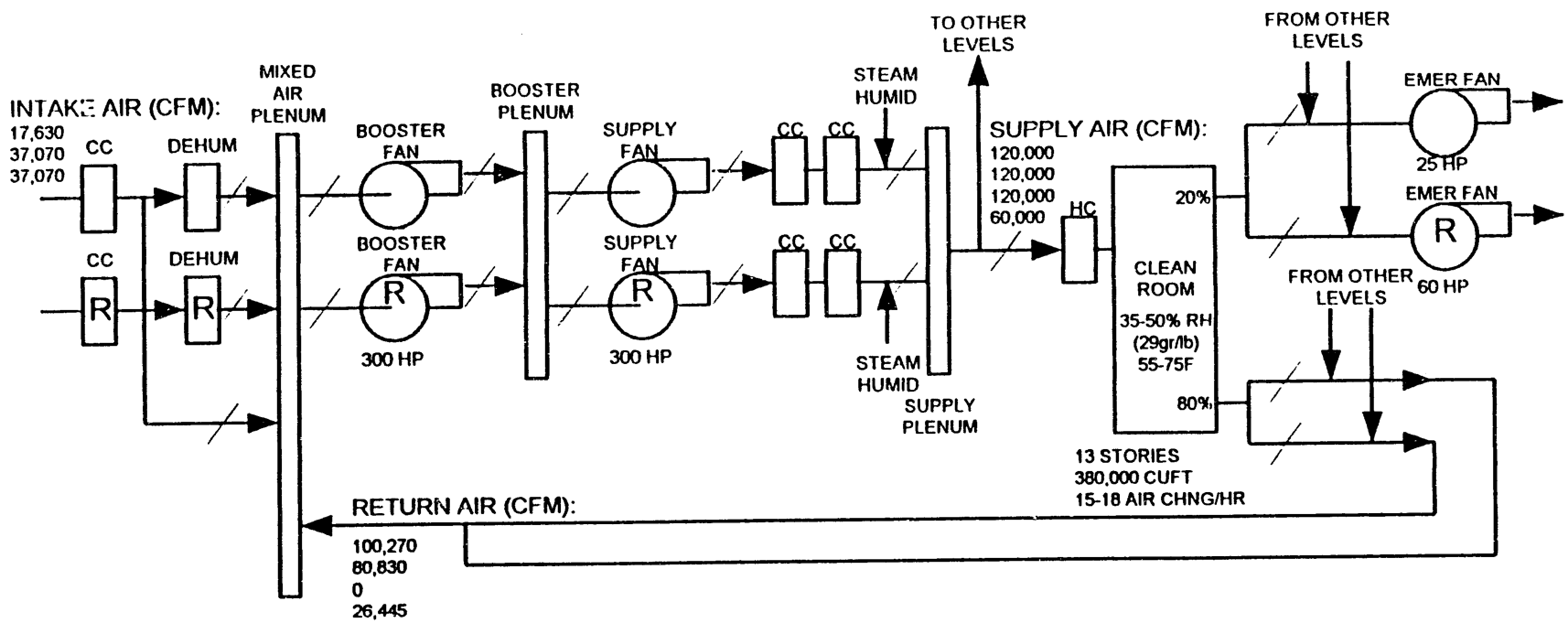

LEGEND:

CC = cooling coil
HC = heating coil
EMER = emergency
DEHUM = dehumidifier
R = redundant system

FIGURE 3.3. SLC-4E Clean Enclosure A/C System

This ERO proposes to replace the existing steam boilers in the MST CE A/C system with pneumatic humidifiers.

Assumptions

The following assumptions were made:

- A generic fully-burdened labor rate of $50 per hour was assumed for craftspersons and equipment operators, based on an average from Means Cost Data for California (Means 1991) and past experience at other government sites.

- A rate of two Titan IV launches per year is assumed, which is one-half the worst case scenario (USAF 1990).

- The existing boilers in the MST CE A/C system are rated at 2 MBtu/hr output at "high fire", but operate at "low fire" conditions the majority of the time (approximately 45 days per launch). Both boilers are operational at the same time, and each boiler's natural gas consumption at this operating point is approximately 0.65 MBtu/h. In addition, there are two 0.75 hp boiler feed water pumps and two 0.5 hp treated water pumps that support boiler operation.

- The boilers and pumps were installed in 1988, and (according to key SLC-4 personnel) have a 15-year life expectancy. The remaining life is 10 years.

- The equipment replacement cost of the boilers and water treatment equipment is a total of $100,000, as escalated from $86,500 (1988$). Labor cost for replacement is estimated to be $4,000.

- The total annual maintenance cost of the steam boilers and water treatment system is $8,000, which includes labor and materials. The cost of water treatment chemicals is not included because of insufficient data.

- Two personnel are required to be in the near vicinity during boiler operation, 20% of their time being dedicated to actual boiler operation. This translates into a total annual operations cost of $14,400.

- If nitrogen is used as the pneumatic source, it is very difficult to estimate the additional nitrogen cost, since humidification would only be used on demand. If it is assumed that humidification is only required two weeks per year, the additional nitrogen cost would be slightly over $16,600. If compressed air is used, an expansion to the proposed air compressor installation mentioned in Section 3.3.2 would be possible, but would probably be cost-prohibitive due to the sporadic nature of the additional load.

- It is assumed that an appropriate water and compressed air/nitrogen service is available in the MST CE A/C, and that there is a linear section of duct adequate in length for proper installation of the pneumatic humidification system. Water requirement is approximately 5 gallon/minute (gpm) when the humidifiers are operational at full load, and it is assumed that a 1 HP pump would be adequate to supply this flow.

- It is assumed that the life expectancy of the pneumatic humidification system is 15 years.

- Although the maintenance requirements are minimal on the actual humidifiers, it is assumed that at an annual inspection of the pneumatic humidifier system will be performed. In addition, occasional pump maintenance will be required. The approximate cost of this maintenance and inspection is $1,000 per year.

- Since the operation of the pneumatic humidification system is fully automatic, there are no operations costs assumed.

- The total installed cost of the two redundant pneumatic humidification systems is $125,000. This includes the equipment and installation cost of the atomizing heads and controllers ($85,500), the water and air service, and the resulting changes to design drawings. Also included is demolition of the existing boilers and water treatment equipment. Due to the extreme mineral content of the water, SLC-4 engineering personnel highly recommend that the reverse osmosis unit also be replaced with a filtration system; this cost ($3,000) is also included in the total installed cost figure. The total replacement cost is $88,500.

Results

Quantitative results of the analysis of this measure are presented in Table 3.3. Table 3.3 contains specific cost and economic performance data. This measure has potential applicability where steam humidification is used. However, due to the sensitive nature of VAFB launch processes, specific information was not available regarding direct applicability at other SLCs.

Budget Implications. The estimated installed cost of this ERO is $125,000.

Energy and Cost Savings. This ERO will save approximately $15,635 in natural gas, $220 in electricity, and ($16,000) in nitrogen costs.

Operations and Maintenance. This ERO will result in an annual maintenance and operations cost savings of $21,400.

Process Safety and Reliability. This ERO enhances both the safety and reliability of the MST CE A/C system. Since the humidification system is capable of responding immediately, it only operates on demand, thus minimizing component wear. Also, since no particular water treatment is required, the potential for releasing water treatment chemicals into the airstream is eliminated.

Environmental Issues. This ERO completely eliminates the fossil fuel emissions released from two natural gas steam boilers.

Sources. Sources for the assumptions and data presented in this ERO are as follows:

- MST CE A/C system:

  Cameron Hedges, Mechanical Engineer
  Martin-Marietta
  SLC-4, Vandenberg AFB, CA 93437
  (805) 734-8232, Ext. 5-2568

- Pneumatic humidifier system:

  Herrmidifier Company, Inc.
  P.O. Box 11148
  Lancaster, PA 17605
  (717) 394-4021

  Represented by:
  Air Filtration & Equipment
  1620 So. 92nd Place, #D
  Seattle, WA 98108
  (206) 767-2600
  Contact: Ken Brown

3.4.2 Replace Steam Boilers in SLC-4E Payload A/C System with Pneumatic Humidifiers

The Payload A/C (PL A/C) system conditions air space at SLC-4E within stringent temperature, humidity, pressure, and air flow requirements. This system is dedicated to delivering conditioned air to the launch vehicle's payload fairing for approximately 45 days before a launch. The fairing is located at the top of the vehicle, approximately cylindrical in shape, and

ranges in size from 56 to 60 feet tall by 18 feet in diameter. The specific requirements for conditioned air vary significantly from user to user, but they generally fall into the following ranges:

Humidity:	40% RH
Temperature:	40°F to 86°F
Air flow:	267 to 5,334 CFM (total)
Pressure:	0.9" to 1.5" H_2O with respect to atmosphere

A simplified diagram of the existing PL A/C system is shown in Figure 3.4. Two parallel systems supply air to the payload fairing; one or both systems may be operational, depending on the user's requirements. Dehumidification is provided by desiccant systems upstream from the supply fans, and humidification is provided by electric steam boilers downstream of the cooling coils and duct heaters. Although the mineral content of the water is high at VAFB, the boiler feedwater is not treated due to the strict air purity requirements.

There are several parts of this system that are inefficient. As in the case of the MST, the electric steam boilers could be replaced with pneumatic humidifiers, since humidification is rarely required. Another improvement is to provide a bypass around the dehumidifiers for times when dehumidification is not required. This also has the effect of reducing the load on the humidifiers. Another improvement is to recirculate the conditioned air which is vented to the atmosphere prior to entering the fairing. This is done to enable the flow to the fairing to be varied using constant-volume fans. The last two improvements are covered as EROs later in this section.

There are cooling coils both upstream and downstream of the supply fans. Although this is inefficient, it is unavoidable because of the high heat of compression imparted by the high-pressure fans, which causes over 70°F in air temperature rise.

The additional duct heaters downstream of the chillers seem inefficient and unnecessary. The SLC-4E HVAC systems engineer agrees that it is inefficient, but the controls for the PL A/C system are not responsive enough to

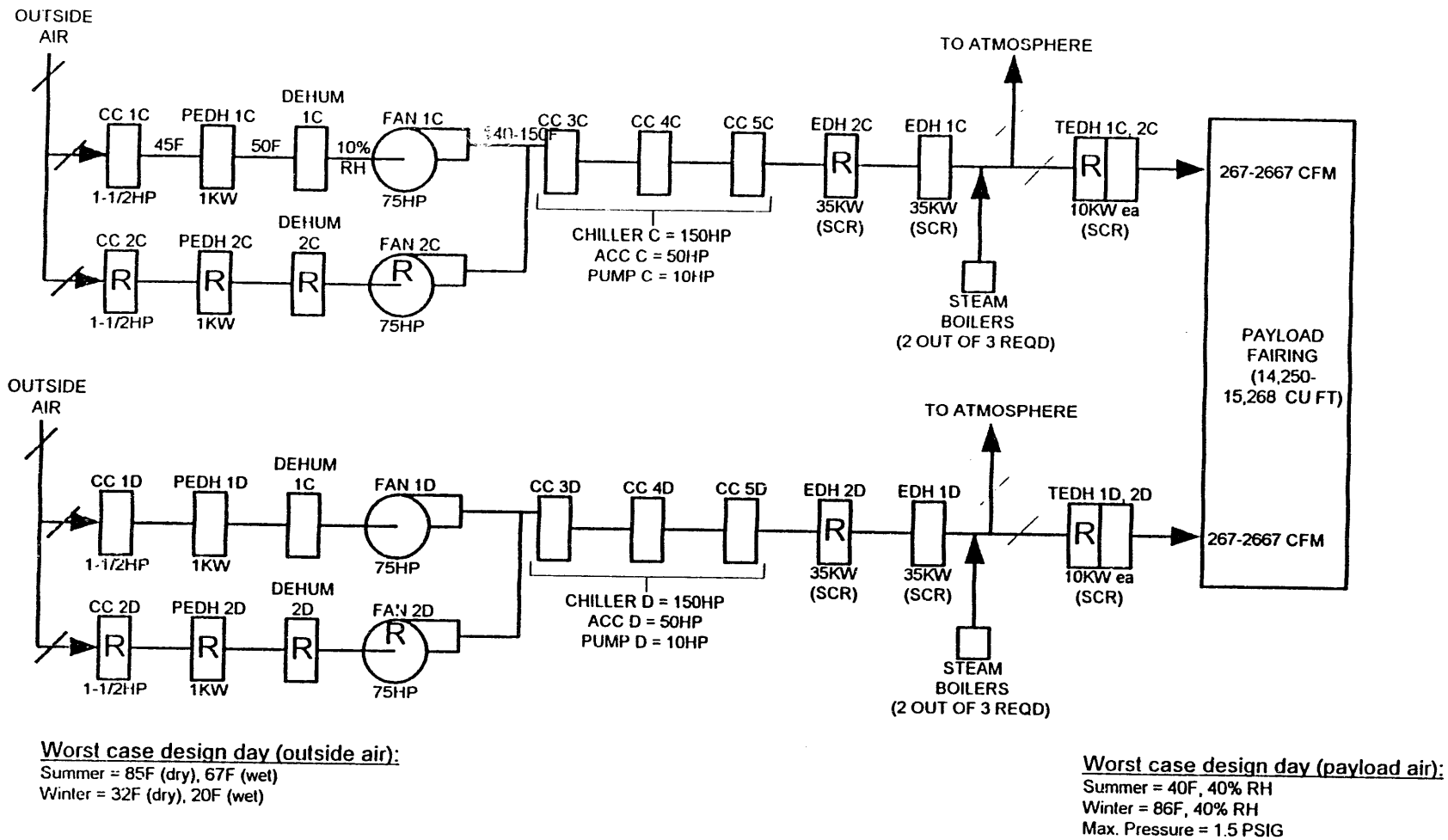

EXISTING SLC-4E PAYLOAD AC SYSTEM (SIMPLIFIED DIAGRAM)

FIGURE 3.4. SLC-4E Payload A/C System

control the air temperature through the chillers to the degree required to meet the user's needs. Thus, short of redesigning the entire PL A/C and control systems, the final electric duct and trim heaters must remain.

This ERO proposes that the PL A/C steam boilers be replaced with a pneumatic humidification system. Since the air flow rate to the payload varies considerably from user to user, and the savings depend heavily on whether a humidifier bypass is also installed, two operating scenarios will be used:

1. Pneumatic humidification with dehumidifyer bypass
2. Pneumatic humidification without dehumidifyer bypass.

Assumptions

The following assumptions were made:

- A generic fully-burdened labor rate of $50 per hour was assumed for craftspersons and equipment operators, based on an average from Means Cost Data for California (Means 1991) and past experience at other government sites.

- A rate of two Titan IV launches per year is assumed, which is one-half the worst case scenario (USAF 1990).

- The current operation consisting of two launches per year where one launch has both parallel systems operating (see Figure 3.4) and the other launch requires only one of the system (either one) to operate.

- If a dehumidification bypass is installed, two of the three existing boilers per parallel branch in the PL A/C system operate for two weeks per year. These boilers would otherwise operate 45 days per launch. The boilers are each rated at 102kW input capacity. In addition, there are two boiler feedwater pumps (assume 0.5 HP each) which operate in conjunction with the each set of boilers.

- The boilers and associated feedwater pumps were installed in 1987, and according to the manufacturer, their life expectancy is only estimated to be 8 years, since no water treatment chemicals are used. The remaining life is 3 years. It is assumed that all boilers on a particular parallel branch are operated an equal amount of time in a year.

- The replacement cost of the boilers and feedwater water system is a total of approximately $60,000, which includes materials and labor.

- The total annual operating and maintenance cost of the steam boilers is approximately $4,000.

- If nitrogen is used as the pneumatic source, the maximum requirement would be approximately 14.5 standard cubic feet per minute (SCFM) per parallel branch. If no bypass is provided around the dehumidifier, this would result in an additional nitrogen cost of almost $2,500 per launch per parallel branch. If a bypass is provided, and humidification is only required two weeks per year, the nitrogen cost is reduced to $400 per year per parallel branch. Again, due to the potentially sporadic nature of the load, a compressed air installation would probably not be feasible or cost-effective unless an existing source with adequate capacity could be found.

- It is assumed that an appropriate water and nitrogen service is available in the PL A/C building, and that there is a linear section of duct adequate in length and width for proper installation of the pneumatic humidification system. Water requirements are approximately 0.5 gpm, and it is assumed that a 0.25 HP pump could provide this flow rate for the entire system.

- It is assumed that the life expectancy of the pneumatic humidification system is 15 years.

- Although the maintenance requirements are minimal, it is assumed that at an annual inspection of the pneumatic humidifier system will be performed. In addition, some pump maintenance will be required. The approximate cost of this inspection and maintenance is $800.

- Since the operation of the pneumatic humidification system is fully automatic, there are no operations costs assumed.

- The total installed cost of the two pneumatic humidification systems is $30,000, which includes the equipment and installation cost of the atomizing heads and controllers, the water and air service, boiler demolition, and the resulting design change. The replacement cost is $8,000.

Results

Quantitative results of the analysis of this measure are presented in Table 3.3. Table 3.3 contains specific cost and economic performance data. This measure has potential applicability where steam humidification is used.

However, due to the sensitive nature of VAFB launch processes, specific information was not available regarding direct applicability at other SLCs.

Budget Implications. The estimated installed cost of this ERO is $30,000.

Energy and Cost Savings. This ERO will save approximately $32,934 in electricity and ($2,500) in nitrogen costs.

Operations and Maintenance. This ERO will result in an annual maintenance cost savings of $3,200, regardless of scenario.

Process Safety and Reliability. This ERO enhances both the safety and reliability of the PL A/C system. Since the humidification system is capable of responding immediately, it only operates on demand, thus minimizing component wear.

Environmental Issues. This ERO has no significant environmental impact.

Sources. Sources for the assumptions and data presented in this ERO are as follows:

- PL A/C system:

  Cameron Hedges, Mechanical Engineer
  Martin-Marietta
  SLC-4, Vandenberg AFB, CA 93437
  (805) 734-8232, Ext. 5-2568

- Pneumatic humidifier system:

  Herrmidifier Company, Inc.
  P.O. Box 11148
  Lancaster, PA 17605
  (717) 394-4021

  Represented by:
  Air Filtration & Equipment
  1620 So. 92nd Place, #D
  Seattle, WA 98108
  (206) 767-2600
  Contact: Ken Brown

3.4.3 Provide Dehumidifier Bypass in SLC-4E Payload A/C System

As mentioned in the previous ERO, there is currently no supply air bypass around the desiccant dehumidifier in the PL A/C system. The dehumidifier is sized and configured such that it reduces the RH of the air leaving the dehumidifier to approximately 10%, so steam is added downstream to bring the RH up to the desired 40%. This is inefficient, and puts an unnecessary load on the dehumidifiers as well as the humidifiers downstream.

This ERO proposes to add a bypass around the dehumidifiers in the PL A/C system. Dampers would modulate the "dry" and "humid" air flows based on feedback from a humidistat, such that the supply air is only dehumidified to the extent required. The humidification downstream would then be required only when the outside air RH is low, which is infrequently. Each bypass kit would consist of the following:

1. Face and bypass plenum
2. Face and bypass dampers
3. Motorized damper actuator
4. Master and slave power controllers
5. Temperature controller
6. Remote mounted humidity sensor
7. Analog process controller.

This approach requires a more complicated control scheme, and there is some doubt about the ability of the existing PL A/C control system to perform adequately in this situation. This obviously has a bearing on the successful implementation of this ERO, but a simple bypass offers little in the way of energy savings unless the existing steam humidifiers are retained. Thus, in order to optimize the energy efficiency of the dehumidification system as a whole, this ERO will assume that the bypass will be supplied with reactivation heat modulation.

Although the manufacturer also supplies reactivation heat recovery kits, they do not feel that heat recovery of this nature would be cost effective in VAFB's temperate climate.

Since the air flow rate to the payload varies considerably from user to user, and the savings depend heavily on whether an alternative form of humidification is used, two operating scenarios will be used:

1. Dehumidification bypass with existing steam humidification
2. Dehumidification bypass without existing steam humidification.

Assumptions

The following assumptions were made:

- A generic fully-burdened labor rate of $50 per hour was assumed for craftspersons and equipment operators, based on an average from Means Cost Data for California (Means 1991) and past experience at other government sites.

- A rate of two Titan IV launches per year is assumed, which is one-half the worst case scenario (USAF 1990).

- The current operation consisting of two launches per year where one launch has both parallel systems operating (see Figure 3.4) and the other launch requires only one of the system (either one) to operate.

- It is assumed that the PL A/C system will operate continuously for 45 days per launch, and that humidification and de-humidification are required continuously during that period in the absence of a bypass. After installing the bypass, it is assumed that humidification (at its maximum level) will be required for approximately two weeks per year, and dehumidification will be required the remainder of the operation time. This operating scenario is designed to provide a conservative "lower bound" on the energy savings presented by this ERO.

- The electrical energy consumption and nitrogen consumption of the two forms of humidification are identical to the previous ERO.

- The electrical energy consumption of each dehumidifier (power to the reactivation heaters) is 72 kW at full load. The manufacturer estimates that after the bypass kits are installed, there will be a 30% reduction in overall energy consumption by the heaters.

- The manufacturer states that the life expectancy of the dehumidifier equipment is approximately 20 years.

- Theoretically, the humidity content of the air downstream of the supply fan should have no net effect on the energy requirement of the duct heaters or cooling coils. However, since some of the operating temperature ranges will change with the increased

humidity, the efficiency of the chillers and other equipment may be affected. It is assumed that any such affect is negligible in comparison with the energy consumption of the system as a whole.

- It is assumed that there is sufficient input and output (I/O) capacity in the current PL A/C control system to interface with dehumidifier controls.

- It is assumed that operation and maintenance costs will not change significantly as a result of installing a bypass around the dehumidifiers.

- The installed cost of this ERO is estimated to be $70,400. This cost includes material cost for four bypass retrofit kits ($12,500 each with a design life of 20 years). This cost also includes $10,400 for installation and $10,000 for changes to the design drawings. The replacement cost is $60,400.

Results

Quantitative results of the analysis of this measure are presented in Table 3.3. Table 3.3 contains specific cost and economic performance data. This type of ERO has potential applicability anywhere dehumidification is used without a bypass. However, due to the sensitive nature of VAFB launch processes, specific information was not available regarding direct applicability at other SLCs.

Budget Implications. The estimated installed cost of this ERO is $70,400.

Energy and Cost Savings. This ERO will save approximately $32,567 in electricity.

Operations and Maintenance. This ERO will result in no significant change in maintenance or operations cost.

Process Safety and Reliability. This ERO has no significant impact on process safety or reliability.

Environmental Issues. This ERO has no significant environmental impact.

Sources. Sources for the assumptions and data presented in this ERO are as follows:

- PL A/C system:

  Cameron Hedges, Mechanical Engineer
  Martin-Marietta
  SLC-4, Vandenberg AFB, CA 93437
  (805) 734-8232, Ext. 5-2568

- Dehumidifier system:

  Munters Cargocaire
  79 Monroe Street
  Amesbury, MA 01913-0640
  (508) 388-0600
  Contact: David McCarthy

3.4.4 Provide Recirculation Path for SLC-4E Payload A/C Conditioned Air

As shown in Figure 3.4, the volume of air required to be supplied to the payload actually varies considerably from user to user during the launch. Generally, at the beginning of the launch cycle, the air flow requirements are lower than at the end of the cycle. To accomplish this with a constant volume fan, there is currently a damper arrangement upstream of the payload which diverts the excess air volume to the atmosphere. This practice wastes a considerable amount of energy because the air that is dumped to the atmosphere has already been fully conditioned (either humidified or dehumidified and cooled). If this air could be recirculated, at least a portion of the energy loss could be recovered.

To determine the economical feasibility of this ERO, two sample calculations were done to estimate an upper bound on the energy savings that would be realized by implementing this measure. The first calculation was with the worst case summer design day (85°F dry bulb and 67°F wet bulb for outside air, 40°F and 40% RH for payload air). The second calculation was with the worst case winter design day (32°F dry bulb and 20°F wet bulb for outside air, 86°F dry bulb and 40% RH for payload air). Calculations were performed using a psychometric chart at 29.92 inches of mercury (Hg). Strictly speaking, this chart is somewhat inaccurate at the pressure level (0.9 to 1.5 psig) in this system. Since the enthalpy correction factors are additive in nature, and differences in enthalpy were the desired quantities to be calculated, the inaccuracies were not deemed to be significant.

Assumptions

The following assumptions were made:

- A generic fully-burdened labor rate of $50 per hour was assumed for craftspersons and equipment operators, based on an average from Means Cost Data for California (Means 1991) and past experience at other government sites.

- A rate of two Titan IV launches per year is assumed, which is one-half the worst case scenario presented (USAF 1990).

- It is assumed that the PL A/C system will operate continuously for 45 days per launch. It is assumed that 200 pounds of air per minute will be delivered to the payload approximately 85% of the time, and 20 pounds of air per minute will be delivered for the remaining time.

- The electrical energy and nitrogen required for pneumatic humidification are negligible in comparison to the energy requirements for heating and/or cooling the airstream.

- Due to system inefficiencies, the coefficient of performance (COP) of the electric heat duct was low, around 1.0. In addition, because of the simultaneous use of trim heaters with cooling coils, a COP of 2.0 is assumed for the chilled water cooling system.

- Life expectancy is not applicable to this ERO.

- The first cost of this ERO is estimated to be a total of $48,800. This cost includes labor and material costs for installing two 50-foot lengths of 14 inches outer diameter (OD) insulated stainless steel duct, four modulating dampers, and two 12 inches deep reinforced concrete core drills (Means Cost Data). It also includes $10,000 for changes to design drawings.

Results

This ERO is a good example of why detailed calculations must be done on a system-by-system basis. For the worst case summer design calculation (in effect, a whole year's worth of worst case days), the energy savings is only 3,700 kWh per parallel system per year. This low savings is primarily due to the relatively short amount of time that the system delivers less than 200 pounds of air per minute. If the duty cycle changes in the future, then this ERO might be economically feasible when the outside air temperature is higher than the temperature of the payload air.

A much different result is obtained for the worst case winter design calculation (again, a whole year's worth of worst case days). In this scenario, it requires considerably more energy to recirculate the payload air than to vent it to atmosphere. At first, this result is surprising, but after consulting the psychometric chart, it becomes very understandable. The energy that the supply fan imparts to the airstream is so high that, at any outside air temperature cooling is required before the air reaches the payload. Thus, the key to minimizing the energy consumption is to minimize the amount of cooling required to achieve the desired payload temperature. If the payload air is cooler than the supply air, then mixing the two before the air stream reaches the supply fan causes a corresponding decrease in outlet temperature. In contrast, if the payload air is warmer than the outside air, mixing the two will cause an increase in outlet air temperature, which is contrary to the desired effect.

In summary, there is no economic advantage in implementing this ERO unless there are future changes in operations schedule (i.e. more frequent launches, less air required to payload, etc.).

Sources. References for the assumptions and data presented in this ERO are as follows:

- PL A/C system:

  Cameron Hedges, Mechanical Engineer
  Martin-Marietta
  SLC-4, Vandenberg AFB, CA 93437
  (805) 734-8232, Ext. 5-2568

- Psychometrics:

  ASHRAE Brochure on Psychometry
  American Society of Heating, Refrigerating, and Air Conditioning Engineers (1977)

- Coefficients of Performance:

  ASHRAE/IES Standard 90.1
  American Society of Heating, Refrigerating, and Air Conditioning Engineers (1989)

TABLE 3.3. Cleanroom/Conditioned Air Space Process EROs

ID	ERO Description	Bldg Type/ Location	Fuel Type(s)	Installed Cost ($)	Annual Energy Savings	Annual Cost Savings: Energy ($)	Annual Cost Savings: O&M ($)	Life Cycle Cost: NPV ($)	Life Cycle Cost: Value Index
5	Replace Steam Boilers with Pneumatic Humidifiers in MST	Launch, SLC-4E Bldg. 719	Elect., Nat. Gas, Nitrogen (N_2)	125,000	2,808 MBtu/hr(NG);4,442 kWh; (235.3 T,N_2)	15,635(NG) 220(Elec) ($16,000)-$N_2$	21,400	273,992	2.2
6a	Replace Steam Boilers with Pneumatic Humidifiers in Payload A/C System (no dehumidifier bypass)	Launch, SLC-4W Bldg. 717	Electricityand Nitrogen (N_2)	30,000	663,328 kWh; (36.8 T, N_2)	32,934(Elec) (2,500)-N_2	3,200	568,343	18.9
6b[a]	Replace Steam Boilers with Pneumatic Humidifiers in Payload A/C System (with humidifier bypass)	Launch, SLC-4W Bldg. 717	Electricity and Nitrogen (N_2)	100,400	757,114 kWh; (5.9 T, N_2)	37,690(Elec) (400)-N_2	3,200	590,602	5.8
7a	Provide Dehumidifyer Bypass in Payload A/C System (existing steam humidifier)	Launch, SLC-4W Bldg. 717	Electricity and Nitrogen (N_2)	70,400	655,929 kWh;	32,567(Elec)	0	401,837	5.7
7b[a]	Provide Dehumidifier Bypass in Payload A/C System (pneumatic humidifier)	Launch, SLC-4W Bldg. 717	Electricity and Nitrogen (N_2)	30,400					

(a) EROs 6b and 7b are mutually inclusive, i.e. they are done or not done in tandem. All overall energy and O&M savings and overall NPV are presented once within ERO 6b. This reporting includes the effect of ERO 7b.

4.0 ENERGY RESOURCE OPPORTUNITY IMPACT STUDY

The energy resource opportunities (EROs) described in Sections 2 and 3 of this report were evaluated on the basis of their life-cycle costs. Section 4.1 describes the life-cycle cost evaluation method, and Section 4.2 presents the results of the evaluation.

4.1 LIFE-CYCLE COST EVALUATION METHOD

Federal agencies are required to evaluate energy-related investments on the basis of minimum life-cycle costs (10 CFR Part 436). A life-cycle cost evaluation computes the total long-run costs of a number of potential actions, and selects the action that minimizes the long-run costs. The life-cycle cost (LCC) of a potential investment is the present value of all of the costs associated with the investment over time. The first step in calculating the LCC is the identification of the relevant costs; these are listed in Table 4.1.

The cost elements cannot simply be summed up when calculating the life-cycle costs, as costs that are borne at different points in time need to be treated differently. This is accomplished through discounting, using the federally mandated discount rate of 4.6% (NIST 1991).

The LCC of an alternative is calculated by summing the installed cost and the present value of the energy cost, the annual O&M cost, and the replacement costs, as shown in Equation 4.1.

$$LCC = IC + PV(EC) + PV(O\&M) + PV(REP) \tag{4.1}$$

where LCC = Life-Cycle Cost
IC = Installed cost
PV(EC) = Present value of annual energy cost
PV(O&M) = Present value of annual O&M cost
PV(REP) = Present value of future replacement cost.

This calculation is complicated slightly when considering a "Replace on Failure" ERO, which consists of replacing worn-out equipment with high-efficiency equipment instead of with identical equipment. In these cases, the

installed cost is not paid until the existing equipment wears out. The LCC of these EROs is calculated by treating the installed cost as zero, and incorporating the cost of the high-efficiency replacements in the PV(REP) term. Replace on Failure EROs enjoy a cost advantage in the life-cycle costing methodology, because their installed cost is discounted, while the installed cost of Replace Immediately EROs is paid in full. At the same time, however, Replace on Failure options are penalized in the energy cost component of the LCC calculation. Replace Immediately EROs experience lower energy costs from the start, while Replace on Failure EROs bear high energy costs until the replacement occurs.

Energy resource opportunities are selected for implementation on the basis of their net present value (NPV). The NPV of an ERO is the life-cycle savings of the ERO as compared to not implementing the ERO:

$$NPV = LCC - LCC' \tag{4.2}$$

where NPV = the net present value of the ERO
LCC = the life-cycle cost of the existing situation
LCC′ = the life-cycle cost if the ERO is implemented.

Most EROs are selected according to a very simple rule: if the NPV is positive, then the project should be undertaken. If the NPV is zero or negative, then the ERO should not be implemented. A positive NPV means the long-run costs of the ERO are less than the long-run costs of the existing situation.

The selection criteria can be complicated by a number of factors. If the ERO is part of a set of mutually exclusive options, then only the option with the highest NPV is selected. For example, oil-fired furnaces in the Administration Buildings on the Old Post can be converted to standard, natural gas furnaces, or they can be replaced with high-efficiency, pulse gas furnaces. The analysis would proceed by calculating the LCC of the existing furnaces, the LCC of converted furnaces, and the LCC of new pulse furnaces. Depending on the level of operation and the oil and natural gas prices faced,

either of the two EROs might be chosen, or it may be optimal to do nothing. If the NPV of both EROs is positive, the highest NPV ERO would be the most advantageous.

The value index (VI) is the NPV of an ERO, divided by the present value of the installed cost of implementing the ERO. The VI is used to prioritize a group of minimum LCC EROs. For example, a total of 100 EROs were evaluated. Of these, 25 had negative NPVs, leaving 75 EROs to consider. Of these, say that there are 5 groups of mutually exclusive pairs, and that the highest NPV ERO of each group is selected. This results in the elimination of 5 EROS, for a grand total of 70 EROs to be implemented. The total cost of implementing all 70 is $5 million, and the facility has an annual budget for energy conservation projects of $1 million. The VI would be used to determine which of the 70 EROs provide the greatest "return on investment," thereby deserving immediate implementation.

Calculation of the VI is generally straightforward, as per Equation 4.3.

$$VI = \frac{NPV}{PV(IC)} \tag{4.3}$$

where VI = value index of an ERO
NPV = net present value of an ERO
PV(IC) = present value of the installed cost of an ERO.

4.2 SUMMARY OF ERO IMPACT STUDY

Table 4.2 defines the assumptions that are common to all of the EROs analyzed. Table 4.3 describes the column headings used in the remaining tables in this section. The LCC calculations for all EROs for each building type are presented in Table 4.4. Many EROs have negative NPVs, and so are not cost-effective. Many others are cost-effective, but are inferior to an alternative ERO. Table 4.5 gives the life-cycle cost results for the EROs constituting the minimum life-cycle cost efficiency resource and are ranked by VI. Table 4.6 presents annualized LCC results with EROs constituting the minimum life-cycle cost efficiency resource. In Table 4.7, the EROs constituting the

minimum life-cycle cost efficiency resource are aggregated by fuel type. Table 4.8 aggregates the LCC results by ERO category. Tables 4.9 and 4.10 follow the format of Tables 4.7 and 4.8 except they present annualized LCC results. Finally, Table 4.11 presents an assessment of the total resource.

TABLE 4.1. Cost Elements in a Life-Cycle Cost Analysis

Cost Element	Description	Example
Installed Cost	Cost of materials purchased and the labor required to install them.	Price of an energy efficient lighting fixture, plus cost of labor to install it.
Energy Cost	Annual expenditures on energy to operate equipment.	A lighting fixture that draws 200 watts and operates 2,000 hours annually requires 200 thousand watt-hours (200 kWh) annually. At an electricity price of $0.10 per kWh, this fixture has an annual energy cost of $20.00.
Nonfuel operations and maintenance	Expenditures on parts and activities required to operate equipment.	Replacing burned out light bulbs.
Replacement costs	Expenditures to replace equipment upon failure.	Replacing an oil furnace when it is no longer usable.

TABLE 4.2. Assumptions Used in LCC Analysis

Discount Rate: 4.6% real

Analysis Period: 25 years

Current Fuel Prices and Conversion Factors:

Fuel	Purchase Units	Conversion Factor (Purchase Units/MBtu)	Price (1992 $/ Purchase Unit)	Price (1992 $/MBtu)
Natural Gas				
Summer	Therms	10.0000	0.53681	5.3681
Winter	Therms	10.0000	0.57682	5.7682
Propane	Gallons	10.5263	0.625	6.58
Unleaded Gasoline	Gallons	7.8309	0.83	6.50
Diesel (Fuel Oil #2)	Gallons	7.2046	0.70	5.04
Electricity				
Summer: On-Peak	kWh	293.0832	0.08485	24.8681
Part.-Peak	kWh	293.0832	0.05759	16.8787
Off-Peak	kWh	293.0832	0.04397	12.8869
Demand	kW	NA	9.60	NA
Winter: On-Peak	kWh	293.0832	NA	NA
Part.-Peak	kWh	293.0832	0.04924	14.4314
Off-Peak	kWh	293.0832	0.04265	12.5000
Demand	kW	NA	0.06000	NA

TABLE 4.3. Description of Column Headings

Column Heading	Description	Unit
Area	Area of VAFB to which ERO applies	Area
End Use	Fuel use that is affected by ERO.	End use
Hard Code	Designates the type of building that is affected by the ERO.	Hard Code
Energy Resource Opportunity (ERO)	Describes the ERO. See Section 2 of this Volume for complete descriptions of each ERO.	ERO
Existing Fuel	Type of fuel used before the ERO for the end use in the area in the building type.	Fuel Type
Resulting Fuel	Type of fuel used after the ERO for the end use in in the area in the building type.	Fuel Type
Installed Cost of ERO	Present value of the labor and materials cost of implementing the ERO. Equals actual cost for immediate EROs, discounted cost for replace-on-failure EROs.	1992 Constant Dollars
Present Value of O&M Savings	Present value of the stream of maintenance and replacement cost reductions attributable to the ERO. May be negative, indicating ERO has higher maintenance and replacement costs than the current equipment.	1992 Constant Dollars
Annual Energy Savings	Energy savings that will be realized in first year year after implementation of ERO.	MBtu per year
Value of Annual Energy Savings	Energy cost savings that will realized in first year after implementing ERO	1992 Constant Dollars
Annual Demand Savings	Electricity demand savings that will be realized in first year after implementation of ERO	kW-month per year
Value of Annual Demand Savings	Electricity demand cost savings that will be realized in first year after implementing ERO	1992 Constant Dollars
Net Present Value (NPV) of ERO	Reduction in life-cycle cost due to ERO	1992 Dollars
Value Index	NPV divided by present value of installed cost	None

TABLE 4.4. LCC Results: All EROs

ERO Category	RI or ROF	Equipment	Description of ERO	ID	ID2	Facility	Exist. Fuel	Result. Fuel(s)	Present Value of Installed Cost (1992 $)	Present Value of Energy Savings (1992 $)	Present Value of Demand Savings (1992 $)	Present Value of O&M Savings (1992 $)	Present Value of Replace. Savings (1992 $)	Present Value of Total Savings (1992 $)	Net Present Value (1992 $)
Lighting	RI	FL 1X8 2-96 STD	FL 1X8 2-96 ELC	1	ADMIN	11777	Elect.	Elect.	$266,305	$238,051	$65,375	$106,187	$0	$409,613	$143,308
Lighting	RI	FL 2X2 2-U ELC	NONE COST-EFFECT.	2	ADMIN	11777	Elect.	Elect.	$0	$0	$0	$0	$0	$0	$0
Lighting	RI	FL 2X4 2-40 STD	FL 2X4 2-T8 ELC	3	ADMIN	11777	Elect.	Elect.	$226,269	$206,527	$56,718	$104,453	$0	$367,698	$141,429
Lighting	RI	EXIT - INC (2X15)	EXIT - LED	4	ADMIN	11777	Elect.	Elect.	$66,443	$58,570	$8,422	$291,452	$0	$358,444	$292,001
Lighting	RI	FL 1X4 2-40 STD	NONE COST-EFFECT.	5	BRK/ADM	13140	Elect.	Elect.	$0	$0	$0	$0	$0	$0	$0
Lighting	RI	FL 2X4 2-40 STD	NONE COST-EFFECT.	6	BRK/ADM	13140	Elect.	Elect.	$0	$0	$0	$0	$0	$0	$0
Lighting	RI	INC 60 CEIL	CFL 11 CEIL FIXT	7	BRK/ADM	13140	Elect.	Elect.	$244,824	$178,300	$58,175	$145,921	$0	$382,396	$137,571
Lighting	RI	EXIT - INC (2X15)	EXIT - LED	8	BRK/ADM	13140	Elect.	Elect.	$49,144	$43,320	$6,229	$215,569	$0	$265,119	$215,975
Lighting	RI	FL 1X8 2-96 STD	FL 1X9 2-96 ELC	9	COMCATN	1762	Elect.	Elect.	$969,153	$866,329	$237,918	$386,442	$0	$1,490,689	$521,535
Lighting	RI	FL 2X4 2-40 STD	FL 2X4 2-T8 ELC	10	COMCATN	1762	Elect.	Elect.	$80,415	$73,399	$20,157	$37,122	$0	$130,679	$50,263
Lighting	RI	EXIT - INC (2X15)	EXIT - LED	11	COMCATN	1762	Elect.	Elect.	$33,019	$29,107	$4,185	$144,840	$0	$178,132	$145,112
Lighting	RI	INC 2-60 CEIL	CFL 2-11 CEIL FIXT	12	HSG-FAM	(411)	Elect.	Elect.	$918,935	$1,170,183	$381,803	$895,445	$0	$2,447,430	$1,528,495
Lighting	RI	INC 2-60 WALL	CFL 2-11 CEIL FIXT	13	HSG-FAM	(411)	Elect.	Elect.	$297,753	$390,061	$127,268	$305,396	$0	$822,725	$524,972
Lighting	RI	INC 4-60 CEIL	CFL 4-11 CEIL	14	HSG-FAM	(411)	Elect.	Elect.	$183,779	$390,061	$127,268	$53,877	$0	$571,205	$387,426
Lighting	RI	INC 60 CAN	FL 11 CAN	15	HSG-FAM	(411)	Elect.	Elect.	$168,134	$97,515	$31,817	$48,979	$0	$178,311	$10,177
Lighting	RI	INC 60 CEIL	CFL 11 CEIL FIXT	16	HSG-FAM	(411)	Elect.	Elect.	$401,695	$292,546	$95,451	$239,419	$0	$627,415	$225,720
Lighting	RI	FL 1X8 2-96 STD	FL 1X8 2-96 ELC	17	MTRPOOL	10726	Elect.	Elect.	$13,355	$11,938	$3,279	$5,329	$0	$20,542	$7,187
Lighting	RI	FL 1X8 3-96 STD	FL 1X8 3-96 ELC	18	MTRPOOL	10726	Elect.	Elect.	$30,821	$30,910	$8,489	$12,261	$0	$51,659	$20,838
Lighting	RI	FL 1X8 4-96 STD	FL 1X8 3-96 ELC REF	19	MTRPOOL	10726	Elect.	Elect.	$34,091	$44,220	$12,144	$12,032	$0	$68,397	$34,306
Lighting	RI	FL 2X4 2-40 STD	FL 2X4 2-T8 ELC	20	MTRPOOL	10726	Elect.	Elect.	$2,429	$2,217	$609	$1,122	$0	$3,948	$1,519
Lighting	RI	FL 2X4 3-40 STD	FL 2X4 2-T8 ELC REF	21	MTRPOOL	10726	Elect.	Elect.	$9,768	$10,561	$2,900	$3,665	$0	$17,126	$7,358
Lighting	RI	INC 150 CEIL	CFL 27 INTEGRAL UNIT	22	MTRPOOL	10726	Elect.	Elect.	$881	$9,843	$2,648	$627	$0	$12,917	$12,037
Lighting	RI	MERC 175	HPS 100 PEND	23	MTRPOOL	10726	Elect.	Elect.	$13,065	$15,679	$4,306	-$2,832	$0	$17,152	$4,088
Lighting	RI	EXIT - INC (2X15)	EXIT - LED	24	MTRPOOL	10726	Elect.	Elect.	$5,689	$5,015	$721	$24,954	$0	$30,689	$25,000
Lighting	RI	EXIT - INC (2X15)	EXIT - LED	25	PRDCTN	8337	Elect.	Elect.	$4,262	$3,757	$540	$18,697	$0	$22,995	$18,732
Lighting	RI	FL 1X4 2-40 STD	FL 1X4 2-T8 ELC	26	PRDCTN	8337	Elect.	Elect.	$747	$682	$187	$345	$0	$1,214	$467
Lighting	RI	FL 1X4 2-40 EEF	FL 1X4 2-T8 ELC	27	PRDCTN	8337	Elect.	Elect.	$830	$528	$145	$399	$0	$1,072	$242
Lighting	RI	FL 1X4 2-40 STD	FL 1X4 2-T8 ELC	28	PRDCTN	8337	Elect.	Elect.	$996	$909	$250	$460	$0	$1,618	$622
Lighting	RI	FL 1X4 2-40 STD	FL 1X4 2-T8 ELC	29	PRDCTN	8337	Elect.	Elect.	$830	$998	$267	$402	$0	$1,668	$838
Lighting	RI	FL 1X4 2-40 EEF	FL 1X4 2-T8 ELC	30	PRDCTN	8337	Elect.	Elect.	$166	$139	$37	$85	$0	$262	$96
Lighting	RI	FL 1X4 2-40 EEF	FL 1X4 2-T8 ELC	31	PRDCTN	8337	Elect.	Elect.	$83	$53	$14	$40	$0	$107	$24
Lighting	RI	FL 1X4 2-40 EEF	NONE COST-EFFECT.	32	PRDCTN	8337	Elect.	Elect.	$0	$0	$0	$0	$0	$0	$0
Lighting	RI	FL 2X4 4-40 STD	FL 2X4 3-T8 ELC REF	33	PRDCTN	8337	Elect.	Elect.	$8,683	$9,089	$2,496	$2,695	$0	$14,279	$5,596
Lighting	RI	FL 2X4 4-40 STD	FL 2X4 4-T8 ELC	34	PRDCTN	8337	Elect.	Elect.	$1,871	$875	$886	$226	$0	$1,987	$116
Lighting	RI	FL 2X4 4-40 EEF	FL 2X4 3-T8 ELC REF	35	PRDCTN	8337	Elect.	Elect.	$1,302	$868	$238	$424	$0	$1,530	$228
Lighting	RI	FL 2X4 4-40 EEF	NONE COST-EFFECT.	36	PRDCTN	8337	Elect.	Elect.	$0	$0	$0	$0	$0	$0	$0
Lighting	RI	FL 2X4 4-40 STD	FL 2X4 4-T8 ELC	37	PRDCTN	8337	Elect.	Elect.	$134	$62	$63	$16	$0	$142	$8
Lighting	RI	FL 2X4 4-40 STD	FL 2X4 3-T8 ELC REF	38	PRDCTN	8337	Elect.	Elect.	$1,954	$2,045	$562	$606	$0	$3,213	$1,259
Lighting	RI	FL 2X4 4-40 STD	FL 2X4 3-T8 ELC REF	39	PRDCTN	8337	Elect.	Elect.	$217	$558	$80	$94	$0	$732	$515
Lighting	RI	FL 2X4 4-40 STD	FL 2X4 3-T8 ELC REF	40	PRDCTN	8337	Elect.	Elect.	$434	$599	$160	$147	$0	$907	$473
Lighting	RI	FL 2X4 4-40 EEF	FL 2X4 3-T8 ELC REF	41	PRDCTN	8337	Elect.	Elect.	$18,452	$12,291	$3,375	$6,013	$0	$21,679	$3,227
Lighting	RI	FL 2X4 4-40 EEF	FL 2X4 3-T8 ELC REF	42	PRDCTN	8337	Elect.	Elect.	$1,085	$723	$199	$354	$0	$1,275	$190
Lighting	RI	FL 2X4 4-40 EEF	FL 2X4 3-T8 ELC REF	43	PRDCTN	8337	Elect.	Elect.	$434	$381	$102	$157	$0	$640	$206
Lighting	RI	FL 2X4 4-40 EEF	NONE COST-EFFECT.	44	PRDCTN	8337	Elect.	Elect.	$0	$0	$0	$0	$0	$0	$0
Lighting	RI	INC 100 CEIL	CFL 27 INTEGRAL UNIT	46	PRDCTN	8337	Elect.	Elect.	$26	$62	$62	$5	$0	$129	$103
Lighting	RI	INC 150 WALL	CFL 27 INTEGRAL UNIT	47	PRDCTN	8337	Elect.	Elect.	$26	$104	$105	$17	$0	$226	$200
Lighting	RI	FL 1X4 2-40 STD	FL 1X4 2-T8 ELC	50	R&D-2	398	Elect.	Elect.	$43,433	$39,644	$10,887	$20,050	$0	$70,581	$27,148
Lighting	RI	FL 1X8 2-96 STD	FL 1X8 2-96 ELC	51	R&D-2	8310	Elect.	Elect.	$460,405	$411,557	$113,025	$183,583	$0	$708,164	$247,760
Lighting	RI	FL 2X4 2-34 STD	FL 2X4 2-34 ELC	52	R&D-2	8310	Elect.	Elect.	$21,103	$11,459	$3,147	$11,541	$0	$26,147	$5,043
Lighting	RI	FL 2X4 2-40 STD	FL 2X4 2-T8 ELC	53	R&D-2	1764	Elect.	Elect.	$54,709	$49,936	$13,714	$25,256	$0	$88,905	$34,196
Lighting	RI	FL 2X4 3-34 STD	FL 2X4 2-T8 ELC REF	54	R&D-2	398	Elect.	Elect.	$328,545	$268,565	$73,755	$131,574	$0	$473,894	$145,349
Lighting	RI	FL 2X4 3-40 STD	FL 2X4 2-T8 ELC REF	55	R&D-2	1728	Elect.	Elect.	$214,650	$232,063	$63,731	$85,962	$0	$381,756	$167,106
Lighting	RI	INC 200 CEIL	NONE COST-EFFECT.	60	R&D-2	1765	Elect.	Elect.	$0	$0	$0	$0	$0	$0	$0
Lighting	RI	INC 300 CEIL	MH 100 PEND	61	R&D-2	1728	Elect.	Elect.	$21,893	$56,947	$15,639	-$5,312	$0	$67,274	$45,381
Lighting	RI	INC 500 PEND	MH 175 PEND	62	R&D-2	8310	Elect.	Elect.	$35,557	$150,743	$41,398	$29,218	$0	$221,359	$185,802
Lighting	RI	INC 60 CEIL	CFL 11 CEIL FIXT	63	R&D-2	21200	Elect.	Elect.	$5,493	$8,317	$2,284	$5,141	$0	$15,742	$10,249
Lighting	RI	MERC 400 PEND	HPS 200 PEND	64	R&D-2	8310	Elect.	Elect.	$36,010	$110,725	$40,379	-$5,950	$0	$145,154	$109,144
Lighting	RI	MERCURY VAPOR 400W CEIL	HPS 200 PEND	65	R&D-2	398	Elect.	Elect.	$3,201	$10,185	$2,792	-$697	$0	$12,259	$9,058
Lighting	RI	MERCURY VAPOR 400W WALL	HPS 200 WALL	66	R&D-2	398	Elect.	Elect.	$5,375	$15,248	$4,187	-$1,048	$0	$18,389	$13,014
Lighting	RI	EXIT - INC (2X15)	EXIT - LED	67	R&D-2	398	Elect.	Elect.	$85,465	$75,338	$10,833	$374,893	$0	$461,063	$375,598
Lighting	RI	FL 1X4 2-40 STD	NONE COST-EFFECT.	68	R&D-1	398	Elect.	Elect.	$0	$0	$0	$0	$0	$0	$0

TABLE 4.4. (contd)

ERO Category	RI or ROF	Equipment	Description of ERO	ID	ID2	Facility	Exist. Fuel	Result. Fuel(s)	Present Value of Installed Cost (1992 $)	Present Value of Energy Savings (1992 $)	Present Value of Demand Savings (1992 $)	Present Value of O&M Savings (1992 $)	Present Value of Replacs. Savings (1992 $)	Present Value of Total Savings (1992 $)	Net Present Value (1992 $)
Lighting	RI	FL 1X8 2-96 STD	NONE COST-EFFECT.	69	R&D-1	8310	Elect.	Elect.	$0	$0	$0	$0	$0	$0	$0
Lighting	RI	FL 2X4 2-34 STD	NONE COST-EFFECT.	70	R&D-1	8310	Elect.	Elect.	$0	$0	$0	$0	$0	$0	$0
Lighting	RI	FL 2X4 2-40 STD	NONE COST-EFFECT.	71	R&D-1	1764	Elect.	Elect.	$0	$0	$0	$0	$0	$0	$0
Lighting	RI	FL 2X4 3-34 STD	NONE COST-EFFECT.	72	R&D-1	398	Elect.	Elect.	$0	$0	$0	$0	$0	$0	$0
Lighting	RI	FL 2X4 3-40 STD	NONE COST-EFFECT.	73	R&D-1	1728	Elect.	Elect.	$0	$0	$0	$0	$0	$0	$0
Lighting	RI	INC 200 CEIL	NONE COST-EFFECT.	78	R&D-1	1765	Elect.	Elect.	$0	$0	$0	$0	$0	$0	$0
Lighting	RI	INC 300 CEIL	MH 100 PEND	79	R&D-1	1728	Elect.	Elect.	$20,272	$17,577	$4,827	$1,428	$0	$23,832	$3,560
Lighting	RI	INC 500 PEND	MH 175 PEND	80	R&D-1	8310	Elect.	Elect.	$32,925	$46,527	$12,778	$13,266	$0	$72,571	$39,646
Lighting	RI	INC 60 CEIL	CFL 11 CEIL FIXT	81	R&D-1	21200	Elect.	Elect.	$5,086	$2,567	$705	$2,550	$0	$5,822	$736
Lighting	RI	MERC 400 PEND	HPS 200 PEND	82	R&D-1	8310	Elect.	Elect.	$33,344	$34,176	$12,463	$1,600	$0	$48,239	$14,895
Lighting	RI	MERCURY VAPOR 400W CEIL	HPS 200 PEND	83	R&D-1	398	Elect.	Elect.	$2,984	$3,137	$862	$164	$0	$4,163	$1,199
Lighting	RI	MERCURY VAPOR 400W WALL	HPS 200 WALL	84	R&D-1	398	Elect.	Elect.	$4,977	$4,706	$1,292	$246	$0	$6,245	$1,268
Lighting	RI	EXIT - INC (2X15)	EXIT - LED	85	R&D-1	398	Elect.	Elect.	$79,137	$69,760	$3,344	$347,136	$0	$420,239	$341,102
Lighting	RI	FL 1X8 2-96 STD	FL 1X8 2-96 ELC	86	SHOP	1785	Elect.	Elect.	$134,319	$120,068	$32,974	$53,558	$0	$206,600	$72,282
Lighting	RI	FL 2X4 2-40 STD	FL 2X4 2-T8 ELC	87	SHOP	1785	Elect.	Elect.	$92,643	$84,560	$23,223	$42,767	$0	$150,550	$57,907
Lighting	RI	EXIT - INC (2X15)	EXIT - LED	88	SHOP	1785	Elect.	Elect.	$18,884	$16,646	$2,394	$82,835	$0	$101,874	$82,990
Lighting	RI	FL 1X8 2-96 STD	FL 1X8 2-96 ELC	89	TRAING	14006	Elect.	Elect.	$201,919	$180,496	$49,569	$80,514	$0	$310,579	$108,660
Lighting	RI	EXIT - INC (2X15)	EXIT - LED	90	TRAING	14006	Elect.	Elect.	$18,280	$16,114	$2,317	$80,185	$0	$98,616	$80,336
Lighting	RI	FL 1X8 2-96 STD	FL 1X8 2-96 ELC	91	WHS	11515	Elect.	Elect.	$224,073	$200,299	$55,008	$89,347	$0	$344,654	$120,581
Lighting	RI	FL 2X4 2-40 STD	FL 2X4 2-T8 ELC	92	WHS	13221	Elect.	Elect.	$245,316	$223,912	$61,492	$113,246	$0	$398,650	$153,334
Lighting	RI	INC 300 CEIL	MH 100 PEND	93	WHS	11510	Elect.	Elect.	$159,641	$416,254	$114,040	-$38,738	$0	$490,557	$330,915
Lighting	RI	EXIT - INC (2X15)	EXIT - LED	94	WHS	11510	Elect.	Elect.	$64,125	$56,526	$8,128	$281,285	$0	$345,940	$281,815
Lighting	RI	INC 200 PEND	NONE COST-EFFECT.	95	WHS	11136	Elect.	Elect.	$0	$0	$0	$0	$0	$0	$0
Lighting	RI	EXIT - INC (2X15)	EXIT - LED	96	WHS	11136	Elect.	Elect.	$524	$462	$66	$2,300	$0	$2,829	$2,305
Motors	ROF	SY3 Well Pump	Effic.-1	1	wp-75		Elect.	Elect.	$2,987	$9,939	(a)	$0	$1,924	$11,863	$8,876
Motors	ROF	SY5 Well Pump	Effic.-1	2	wp-60		Elect.	Elect.	$2,541	$12,066	(a)	$0	$2,073	$14,139	$11,598
Motors	ROF	SY6 Well Pump	Effic.-1	3	wp-75		Elect.	Elect.	$3,208	$2	(a)	$0	$1,812	$1,815	-$1,394
Motors	ROF	SA4 Well Pump	Effic.-1	4	wp-60		Elect.	Elect.	$2,908	$40,592	(a)	$0	$2,319	$42,911	$40,003
Motors	ROF	SA5 Well Pump	Effic.-1	5	wp-75		Elect.	Elect.	$4,017	$95,213	(a)	$0	$1,981	$97,194	$93,177
Motors	ROF	SA6 Well Pump	Effic.-1	6	wp-75		Elect.	Elect.	$4,017	$47,647	(a)	$0	$1,981	$49,628	$45,611
Motors	ROF	SA7 Well Pump	Effic.-1	7	wp-75		Elect.	Elect.	$4,017	$52,398	(a)	$0	$1,981	$54,380	$50,362
Motors	ROF	SV1 Well Pump	Effic.-1	8	wp-100		Elect.	Elect.	$4,376	$12,326	(a)	$0	$3,705	$16,032	$11,656
Motors	ROF	SV3 Well Pump	Effic.-1	9	wp-100		Elect.	Elect.	$4,376	$13,388	(a)	$0	$3,705	$17,094	$12,718
Motors	ROF	SY3 Well Pump	Effic.-2	1	wp-75		Elect.	Elect.	$2,043	$8,996	(a)	$0	$2,130	$11,126	$9,083
Motors	ROF	SY5 Well Pump	Effic.-2	2	wp-60		Elect.	Elect.	$2,216	$10,306	(a)	$0	$2,157	$12,463	$10,246
Motors	ROF	SY6 Well Pump	Effic.-2	3	wp-75		Elect.	Elect.	$1,953	$2	(a)	$0	$2,037	$2,039	$86
Motors	ROF	SA4 Well Pump	Effic.-2	4	wp-60		Elect.	Elect.	$2,536	$34,671	(a)	$0	$2,454	$37,125	$34,588
Motors	ROF	SA5 Well Pump	Effic.-2	5	wp-75		Elect.	Elect.	$2,446	$86,180	(a)	$0	$2,549	$88,729	$86,284
Motors	ROF	SA6 Well Pump	Effic.-2	6	wp-75		Elect.	Elect.	$2,446	$43,127	(a)	$0	$2,549	$45,676	$43,231
Motors	ROF	SA7 Well Pump	Effic.-2	7	wp-75		Elect.	Elect.	$2,446	$47,427	(a)	$0	$2,549	$49,977	$47,531
Motors	ROF	SV1 Well Pump	Effic.-2	8	wp-100		Elect.	Elect.	$4,087	$10,624	(a)	$0	$3,810	$14,434	$10,347
Motors	ROF	SV3 Well Pump	Effic.-2	9	wp-100		Elect.	Elect.	$4,087	$11,540	(a)	$0	$3,810	$15,349	$11,262
Motors	ROF	SYa Booster Pump	Effic.-1	1	mbp-250		Elect.	Elect.	$11,301	-$4,183	(a)	$0	$4,077	-$106	-$11,407
Motors	ROF	SYb Booster Pump	Effic.-1	2	mbp-250		Elect.	Elect.	$11,301	-$4,183	(a)	$0	$4,077	-$106	-$11,407
Motors	ROF	SYc Booster Pump	Effic.-1	3	mbp-250		Elect.	Elect.	$11,301	-$2,789	(a)	$0	$4,077	$1,288	-$10,013
Motors	ROF	SYd Booster Pump	Effic.-1	4	mbp-60		Elect.	Elect.	$2,541	$5,263	(a)	$0	$2,073	$7,337	$4,796
Motors	ROF	SYe Booster Pump	Effic.-1	5	mbp-60		Elect.	Elect.	$2,541	$5,263	(a)	$0	$2,073	$7,337	$4,796
Motors	ROF	SAa Booster Pump	Effic.-1	6	mbp-100		Elect.	Elect.	$4,376	$19,350	(a)	$0	$3,705	$23,055	$18,679
Motors	ROF	SAb Booster Pump	Effic.-1	7	mbp-100		Elect.	Elect.	$4,376	$19,350	(a)	$0	$3,705	$23,055	$18,679
Motors	ROF	SAc Booster Pump	Effic.-1	8	mbp-100		Elect.	Elect.	$4,376	$19,350	(a)	$0	$3,705	$23,055	$18,679
Motors	ROF	SAd Booster Pump	Effic.-1	9	mbp-100		Elect.	Elect.	$4,376	$19,350	(a)	$0	$3,705	$23,055	$18,679
Motors	ROF	SAe Booster Pump	Effic.-1	10	mbp-150		Elect.	Elect.	$7,354	$57,776	(a)	$0	$6,353	$64,129	$56,775
Motors	ROF	SAf Booster Pump	Effic.-1	11	mbp-150		Elect.	Elect.	$7,354	$57,776	(a)	$0	$6,353	$64,129	$56,775
Motors	ROF	SAg Booster Pump	Effic.-1	12	mbp-150		Elect.	Elect.	$7,354	$57,776	(a)	$0	$6,353	$64,129	$56,775
Motors	ROF	SAh Booster Pump	Effic.-1	13	mbp-150		Elect.	Elect.	$7,354	$57,776	(a)	$0	$6,353	$64,129	$56,775
Motors	ROF	SV Booster Pump	Effic.-1	14	mbp-400		Elect.	Elect.	$17,234	$15,377	(a)	$0	$10,905	$26,283	$9,049
Motors	ROF	SYa Booster Pump	Effic.-2	1	mbp-250		Elect.	Elect.	$6,664	$6,493	(a)	$0	$5,268	$11,761	$5,098
Motors	ROF	SYb Booster Pump	Effic.-2	2	mbp-250		Elect.	Elect.	$6,664	$6,493	(a)	$0	$5,268	$11,761	$5,098
Motors	ROF	SYc Booster Pump	Effic.-2	3	mbp-250		Elect.	Elect.	$6,664	$4,329	(a)	$0	$5,268	$9,597	$2,933
Motors	ROF	SYd Booster Pump	Effic.-2	4	mbp-60		Elect.	Elect.	$2,216	$3,551	(a)	$0	$2,157	$5,707	$3,491
Motors	ROF	SYe Booster Pump	Effic.-2	5	mbp-60		Elect.	Elect.	$2,216	$3,551	(a)	$0	$2,157	$5,707	$3,491

TABLE 4.4. (contd)

ERO Category	RI or ROF	Equipment	Description of ERO	ID	ID2	Facility	Exist. Fuel	Result. Fuel(s)	Present Value of Installed Cost (1992 $)	Present Value of Energy Savings (1992 $)	Present Value of Demand Savings (1992 $)	Present Value of O&M Savings (1992 $)	Present Value of Replace. Savings (1992 $)	Present Value of Total Savings (1992 $)	Net Present Value (1992 $)
Motors	ROF	SAa Booster Pump	Effic.-2		6 mbp-100		Elect.	Elect.	$4,087	$16,678	(a)	$0	$3,810	$20,488	$16,401
Motors	ROF	SAb Booster Pump	Effic.-2		7 mbp-100		Elect.	Elect.	$4,087	$16,678	(a)	$0	$3,810	$20,488	$16,401
Motors	ROF	SAc Booster Pump	Effic.-2		8 mbp-100		Elect.	Elect.	$4,087	$16,678	(a)	$0	$3,810	$20,488	$16,401
Motors	ROF	SAd Booster Pump	Effic.-2		9 mbp-100		Elect.	Elect.	$4,087	$16,678	(a)	$0	$3,810	$20,488	$16,401
Motors	ROF	SAe Booster Pump	Effic.-2		10 mbp-150		Elect.	Elect.	$6,402	$51,407	(a)	$0	$6,697	$58,104	$51,701
Motors	ROF	SAf Booster Pump	Effic.-2		11 mbp-150		Elect.	Elect.	$6,402	$51,407	(a)	$0	$6,697	$58,104	$51,701
Motors	ROF	SAg Booster Pump	Effic.-2		12 mbp-150		Elect.	Elect.	$6,402	$51,407	(a)	$0	$6,697	$58,104	$51,701
Motors	ROF	SAh Booster Pump	Effic.-2		13 mbp-150		Elect.	Elect.	$6,402	$51,407	(a)	$0	$6,697	$58,104	$51,701
Motors	ROF	SV Booster Pump	Effic.-2		14 mbp-400		Elect.	Elect.	$14,358	$14,248	(a)	$0	$11,945	$26,193	$11,836
Motors	ROF	Sewage Station	Effic.-1		1 mep-5		393 Elect.	Elect.	$489	$4,930	$688	$0	$215	$5,833	$5,344
Motors	ROF	Sewage Station	Effic.-1		2 mep-5		393 Elect.	Elect.	$489	$4,930	$688	$0	$215	$5,833	$5,344
Motors	ROF	Sewage Station	Effic.-1		3 mep-3		488 Elect.	Elect.	$420	-$2,682	-$374	$0	$212	-$2,844	-$3,264
Motors	ROF	Sewage Station	Effic.-1		4 mep-3		488 Elect.	Elect.	$420	-$2,683	-$374	$0	$212	-$2,845	-$3,266
Motors	ROF	Sewage Station	Effic.-1		5 mep-1.33		535 Elect.	Elect.	$338	$1,037	$145	$0	$40	$1,222	$884
Motors	ROF	Sewage Station	Effic.-1		6 mep-2		743 Elect.	Elect.	$338	$1,560	$218	$0	$40	$1,817	$1,479
Motors	ROF	Sewage Station	Effic.-1		7 mep-7.5		743 Elect.	Elect.	$665	$8,255	$1,152	$0	$289	$9,696	$9,030
Motors	ROF	Sewage Station	Effic.-1		8 mep-7.5		743 Elect.	Elect.	$665	$8,255	$1,152	$0	$289	$9,696	$9,030
Motors	ROF	Sewage Station	Effic.-1		9 mep-3		769 Elect.	Elect.	$420	-$2,683	-$374	$0	$212	-$2,845	-$3,266
Motors	ROF	Sewage Station	Effic.-1		10 mep-3		896 Elect.	Elect.	$420	-$2,682	-$374	$0	$212	-$2,844	-$3,264
Motors	ROF	Sewage Station	Effic.-1		11 mep-3		896 Elect.	Elect.	$420	-$2,682	-$374	$0	$212	-$2,844	-$3,264
Motors	ROF	Sewage Station	Effic.-1		12 mep-1.5		896 Elect.	Elect.	$312	$1,180	$162	$0	$75	$1,397	$1,085
Motors	ROF	Sewage Station	Effic.-1		13 mep-1		1801 Elect.	Elect.	$282	$729	$102	$0	$161	$991	$709
Motors	ROF	Sewage Station	Effic.-1		14 mep-2		21150 Elect.	Elect.	$339	$1,559	$217	$0	$40	$1,816	$1,478
Motors	ROF	Sewage Station	Effic.-1		15 mep-3		23260 Elect.	Elect.	$420	-$2,682	-$374	$0	$212	-$2,844	-$3,264
Motors	ROF	Sewage Station	Effic.-1		16 mep-3		23260 Elect.	Elect.	$420	-$2,682	-$374	$0	$212	-$2,844	-$3,264
Motors	ROF	Sewage Station	Effic.-2		1 mep-5		393 Elect.	Elect.	$418	$3,684	$514	$0	$384	$4,581	$4,164
Motors	ROF	Sewage Station	Effic.-2		2 mep-5		393 Elect.	Elect.	$418	$3,684	$514	$0	$384	$4,581	$4,164
Motors	ROF	Sewage Station	Effic.-2		3 mep-3		488 Elect.	Elect.	$310	$1,929	$269	$0	$473	$2,671	$2,361
Motors	ROF	Sewage Station	Effic.-2		4 mep-3		488 Elect.	Elect.	$310	$1,928	$269	$0	$473	$2,670	$2,360
Motors	ROF	Sewage Station	Effic.-2		5 mep-1.33		535 Elect.	Elect.	$395	$855	$119	$0	-$95	$880	$485
Motors	ROF	Sewage Station	Effic.-2		6 mep-2		743 Elect.	Elect.	$395	$1,286	$179	$0	-$95	$1,371	$976
Motors	ROF	Sewage Station	Effic.-2		7 mep-7.5		743 Elect.	Elect.	$547	$6,218	$867	$0	$572	$7,657	$7,111
Motors	ROF	Sewage Station	Effic.-2		8 mep-7.5		743 Elect.	Elect.	$547	$6,218	$867	$0	$572	$7,657	$7,111
Motors	ROF	Sewage Station	Effic.-2		9 mep-3		769 Elect.	Elect.	$310	$1,928	$269	$0	$473	$2,670	$2,360
Motors	ROF	Sewage Station	Effic.-2		10 mep-3		896 Elect.	Elect.	$310	$1,929	$269	$0	$473	$2,671	$2,361
Motors	ROF	Sewage Station	Effic.-2		11 mep-3		896 Elect.	Elect.	$310	$1,929	$269	$0	$473	$2,671	$2,361
Motors	ROF	Sewage Station	Effic.-2		12 mep-1.5		896 Elect.	Elect.	$376	$717	$100	$0	-$79	$739	$362
Motors	ROF	Sewage Station	Effic.-2		13 mep-1		1801 Elect.	Elect.	$255	$383	$51	$0	$227	$640	$386
Motors	ROF	Sewage Station	Effic.-2		14 mep-2		21150 Elect.	Elect.	$395	$1,285	$179	$0	-$95	$1,370	$975
Motors	ROF	Sewage Station	Effic.-2		15 mep-3		23260 Elect.	Elect.	$310	$1,929	$269	$0	$473	$2,671	$2,361
Motors	ROF	Sewage Station	Effic.-2		16 mep-3		23260 Elect.	Elect.	$310	$1,929	$269	$0	$473	$2,671	$2,361
Motors	ROF	Sewage Station	2-SPD		1 mep-5		393 Elect.	Elect.	$748	$8,862	-$6	$0	-$404	$8,453	$7,705
Motors	ROF	Sewage Station	2-SPD		2 mep-5		393 Elect.	Elect.	$748	$8,862	-$6	$0	-$404	$8,453	$7,705
Motors	ROF	Sewage Station	2-SPD		3 mep-3		488 Elect.	Elect.	$641	$4,902	-$87	$0	-$315	$4,500	$3,859
Motors	ROF	Sewage Station	2-SPD		4 mep-3		488 Elect.	Elect.	$641	$4,901	-$87	$0	-$315	$4,499	$3,858
Motors	ROF	Sewage Station	2-SPD		5 mep-1.33		535 Elect.	Elect.	$512	$1,939	-$85	$0	-$375	$1,480	$968
Motors	ROF	Sewage Station	2-SPD		6 mep-2		743 Elect.	Elect.	$512	$3,048	-$102	$0	-$375	$2,570	$2,057
Motors	ROF	Sewage Station	2-SPD		7 mep-7.5		743 Elect.	Elect.	$1,034	$16,904	$465	$0	-$590	$16,779	$15,745
Motors	ROF	Sewage Station	2-SPD		8 mep-7.5		743 Elect.	Elect.	$1,034	$16,904	$465	$0	-$590	$16,779	$15,745
Motors	ROF	Sewage Station	2-SPD		9 mep-3		769 Elect.	Elect.	$641	$4,901	-$87	$0	-$315	$4,499	$3,858
Motors	ROF	Sewage Station	2-SPD		10 mep-3		896 Elect.	Elect.	$641	$4,902	-$87	$0	-$315	$4,500	$3,859
Motors	ROF	Sewage Station	2-SPD		11 mep-3		896 Elect.	Elect.	$641	$4,902	-$87	$0	-$315	$4,500	$3,859
Motors	ROF	Sewage Station	2-SPD		12 mep-1.5		896 Elect.	Elect.	$489	$2,187	-$96	$0	-$300	$1,791	$1,321
Motors	ROF	Sewage Station	2-SPD		13 mep-1		1801 Elect.	Elect.	$427	$1,391	-$77	$0	-$184	$1,130	$703
Motors	ROF	Sewage Station	2-SPD		14 mep-2		21150 Elect.	Elect.	$512	$3,045	-$102	$0	-$375	$2,569	$2,056
Motors	ROF	Sewage Station	2-SPD		15 mep-3		23260 Elect.	Elect.	$641	$4,902	-$87	$0	-$315	$4,500	$3,859
Motors	ROF	Sewage Station	2-SPD		16 mep-3		23260 Elect.	Elect.	$641	$4,902	-$87	$0	-$315	$4,500	$3,859
Motors	ROF	Lift Station	Effic.-1		1 mlp-15		19456 Elect.	Elect.	$1,041	$1,370	(a)	$0	$848	$2,218	$1,177
Motors	ROF	Lift Station	Effic.-1		2 mlp-25		13630 Elect.	Elect.	$1,472	$2,400	(a)	$0	$1,239	$3,639	$2,168
Motors	ROF	Lift Station	Effic.-2		1 mlp-15		19456 Elect.	Elect.	$883	$1,117	(a)	$0	$906	$2,023	$1,140
Motors	ROF	Lift Station	Effic.-2		2 mlp-25		13630 Elect.	Elect.	$1,301	$2,001	(a)	$0	$1,301	$3,302	$2,001

TABLE 4.4. (contd)

ERO Category	RI or ROF	Equipment	Description of ERO	ID	ID2	Facility	Exist. Fuel	Result. Fuel(s)	Present Value of Installed Cost (1992 $)	Present Value of Energy Savings (1992 $)	Present Value of Demand Savings (1992 $)	Present Value of O&M Savings (1992 $)	Present Value of Replace. Savings (1992 $)	Present Value of Total Savings (1992 $)	Net Present Value (1992 $)
Motors	ROF	fan, exhaust	Effic.-1		1 mef-2		715 Elect.	Elect.	$236	$222	(a)	$0	$177	$399	$163
Motors	ROF	air shower	Effic.-1		2 mf-5		715 Elect.	Elect.	$341	$695	(a)	$0	$291	$986	$645
Motors	ROF	fan, supply	Effic.-1		3 mef-1.5		715 Elect.	Elect.	$217	$165	(a)	$0	$172	$337	$119
Motors	ROF	fan, exhaust	Effic.-1		4 mef-1.5		715 Elect.	Elect.	$217	$165	(a)	$0	$172	$337	$119
Motors	ROF	fan, supply	Effic.-1		5 mef-7.5		715 Elect.	Elect.	$464	$1,159	(a)	$0	$395	$1,554	$1,090
Motors	ROF	fan, supply	Effic.-1		6 mef-25		715 Elect.	Elect.	$1,027	$4,246	(a)	$0	$912	$5,158	$4,131
Motors	ROF	fan, exhaust	Effic.-1		7 mef-1.5		715 Elect.	Elect.	$217	$165	(a)	$0	$172	$337	$119
Motors	ROF	fan, exhaust	Effic.-1		8 mef-1.5		715 Elect.	Elect.	$217	$165	(a)	$0	$172	$337	$119
Motors	ROF	fan, supply	Effic.-1		9 mef-10		715 Elect.	Elect.	$551	$1,535	(a)	$0	$425	$1,960	$1,409
Motors	ROF	fan, exhaust	Effic.-1		10 mef-5		715 Elect.	Elect.	$341	$695	(a)	$0	$291	$986	$645
Motors	ROF	pump, condenser	Effic.-1		11 mcp-15		715 Elect.	Elect.	$726	$2,427	(a)	$0	$629	$3,056	$2,330
Motors	ROF	fan, exhaust	Effic.-1		12 mef-10		715 Elect.	Elect.	$551	$1,535	(a)	$0	$425	$1,960	$1,409
Motors	ROF	pump, chilled water	Effic.-1		13 mcwp-3		715 Elect.	Elect.	$293	-$351	(a)	$0	$256	-$95	-$388
Motors	ROF	pump, chiller recirc	Effic.-1		14 mcwp-1.5		715 Elect.	Elect.	$217	$165	(a)	$0	$172	$337	$119
Motors	ROF	pump, air washer	Effic.-1		15 mf-7.5		715 Elect.	Elect.	$464	$1,159	(a)	$0	$395	$1,554	$1,090
Motors	ROF	fan, exhaust	Effic.-1		16 mef-1.5		715 Elect.	Elect.	$217	$165	(a)	$0	$172	$337	$119
Motors	ROF	fan, supply	Effic.-1		17 mef-15		715 Elect.	Elect.	$726	$2,427	(a)	$0	$629	$3,056	$2,330
Motors	ROF	fan, supply	Effic.-1		18 mef-15		715 Elect.	Elect.	$726	$2,427	(a)	$0	$629	$3,056	$2,330
Motors	ROF	fan, exhaust	Effic.-2		1 mef-2		715 Elect.	Elect.	$276	$184	(a)	$0	$175	$360	$84
Motors	ROF	air shower	Effic.-2		2 mf-5		715 Elect.	Elect.	$291	$525	(a)	$0	$293	$818	$527
Motors	ROF	fan, supply	Effic.-2		3 mef-1.5		715 Elect.	Elect.	$263	$105	(a)	$0	$170	$274	$12
Motors	ROF	fan, exhaust	Effic.-2		4 mef-1.5		715 Elect.	Elect.	$263	$105	(a)	$0	$170	$274	$12
Motors	ROF	fan, supply	Effic.-2		5 mef-7.5		715 Elect.	Elect.	$381	$882	(a)	$0	$399	$1,281	$900
Motors	ROF	fan, supply	Effic.-2		6 mef-25		715 Elect.	Elect.	$908	$3,560	(a)	$0	$917	$4,477	$3,569
Motors	ROF	fan, exhaust	Effic.-2		7 mef-1.5		715 Elect.	Elect.	$263	$105	(a)	$0	$170	$274	$12
Motors	ROF	fan, exhaust	Effic.-2		8 mef-1.5		715 Elect.	Elect.	$263	$105	(a)	$0	$170	$274	$12
Motors	ROF	fan, supply	Effic.-2		9 mef-10		715 Elect.	Elect.	$470	$1,214	(a)	$0	$429	$1,643	$1,173
Motors	ROF	fan, exhaust	Effic.-2		10 mef-5		715 Elect.	Elect.	$291	$525	(a)	$0	$293	$818	$527
Motors	ROF	pump, condenser	Effic.-2		11 mcp-15		715 Elect.	Elect.	$616	$1,993	(a)	$0	$635	$2,627	$2,011
Motors	ROF	fan, exhaust	Effic.-2		12 mef-10		715 Elect.	Elect.	$470	$1,214	(a)	$0	$429	$1,643	$1,173
Motors	ROF	pump, chilled water	Effic.-2		13 mcwp-3		715 Elect.	Elect.	$217	$277	(a)	$0	$260	$536	$320
Motors	ROF	pump, chiller recirc	Effic.-2		14 mcwp-1.5		715 Elect.	Elect.	$263	$105	(a)	$0	$170	$274	$12
Motors	ROF	pump, air washer	Effic.-2		15 mf-7.5		715 Elect.	Elect.	$381	$882	(a)	$0	$399	$1,281	$900
Motors	ROF	fan, exhaust	Effic.-2		16 mef-1.5		715 Elect.	Elect.	$263	$105	(a)	$0	$170	$274	$12
Motors	ROF	fan, supply	Effic.-2		17 mef-15		715 Elect.	Elect.	$616	$1,993	(a)	$0	$635	$2,627	$2,011
Motors	ROF	fan, supply	Effic.-2		18 mef-15		715 Elect.	Elect.	$616	$1,993	(a)	$0	$635	$2,627	$2,011
Motors	ROF	pump	Effic.-1		1 mp-1.5		717 Elect.	Elect.	$312	$149	(a)	$0	$223	$373	$61
Motors	ROF	fan	Effic.-1		2 mf-40		717 Elect.	Elect.	$2,099	$12,677	(a)	$0	$1,496	$14,174	$12,074
Motors	ROF	pump	Effic.-1		3 mp-5		717 Elect.	Elect.	$489	$1,258	(a)	$0	$389	$1,648	$1,159
Motors	ROF	pump	Effic.-1		4 mp-1.5		717 Elect.	Elect.	$312	$299	(a)	$0	$223	$522	$210
Motors	ROF	pump	Effic.-1		5 mp-5		717 Elect.	Elect.	$489	$1,258	(a)	$0	$389	$1,648	$1,159
Motors	ROF	fan	Effic.-1		6 mf-40		717 Elect.	Elect.	$2,099	$12,677	(a)	$0	$1,496	$14,174	$12,074
Motors	ROF	pump	Effic.-1		7 mp-1.5		717 Elect.	Elect.	$312	$149	(a)	$0	$223	$373	$61
Motors	ROF	fan	Effic.-1		8 mf-40		717 Elect.	Elect.	$2,099	$12,677	(a)	$0	$1,496	$14,174	$12,074
Motors	ROF	pump	Effic.-1		9 mp-1.5		717 Elect.	Elect.	$312	$299	(a)	$0	$223	$522	$210
Motors	ROF	fan	Effic.-1		10 mf-75		717 Elect.	Elect.	$4,017	$12,184	(a)	$0	$1,981	$14,166	$10,148
Motors	ROF	fan	Effic.-1		11 mf-75		717 Elect.	Elect.	$4,017	$12,184	(a)	$0	$1,981	$14,166	$10,148
Motors	ROF	pump	Effic.-1		12 mp-1		717 Elect.	Elect.	$282	$188	(a)	$0	$240	$428	$146
Motors	ROF	pump	Effic.-1		13 mp-1.5		717 Elect.	Elect.	$312	$149	(a)	$0	$223	$373	$61
Motors	ROF	pump	Effic.-1		14 mp-1.5		717 Elect.	Elect.	$312	$149	(a)	$0	$223	$373	$61
Motors	ROF	pump	Effic.-1		15 mp-1		717 Elect.	Elect.	$282	$188	(a)	$0	$240	$428	$146
Motors	ROF	pump	Effic.-1		16 mp-10		717 Elect.	Elect.	$790	$1,390	(a)	$0	$547	$1,937	$1,147
Motors	ROF	fan	Effic.-1		17 mf-40		717 Elect.	Elect.	$2,099	$12,677	(a)	$0	$1,496	$14,174	$12,074
Motors	ROF	fan	Effic.-1		18 mf-75		717 Elect.	Elect.	$4,017	$12,184	(a)	$0	$1,981	$14,166	$10,148
Motors	ROF	pump	Effic.-1		19 mp-10		717 Elect.	Elect.	$790	$1,390	(a)	$0	$547	$1,937	$1,147
Motors	ROF	fan	Effic.-1		20 mf-75		717 Elect.	Elect.	$4,017	$12,184	(a)	$0	$1,981	$14,166	$10,148
Motors	ROF	pump	Effic.-2		1 mp-1.5		717 Elect.	Elect.	$376	$95	(a)	$0	$200	$295	-$82
Motors	ROF	fan	Effic.-2		2 mf-40		717 Elect.	Elect.	$1,801	$10,314	(a)	$0	$1,604	$11,918	$10,117
Motors	ROF	pump	Effic.-2		3 mp-5		717 Elect.	Elect.	$418	$951	(a)	$0	$415	$1,366	$949
Motors	ROF	pump	Effic.-2		4 mp-1.5		717 Elect.	Elect.	$376	$190	(a)	$0	$200	$390	$13
Motors	ROF	pump	Effic.-2		5 mp-5		717 Elect.	Elect.	$418	$951	(a)	$0	$415	$1,366	$949

AIIM

Association for Information and Image Management

1100 Wayne Avenue, Suite 1100
Silver Spring, Maryland 20910

301/587-8202

Centimeter

Inches

MANUFACTURED TO AIIM STANDARDS
BY APPLIED IMAGE, INC.

3 of 3

TABLE 4.4. (contd)

ERO Category	RI or ROF	Equipment	Description of ERO	ID	ID2	Facility	Exist. Fuel	Result. Fuel(s)	Present Value of Installed Cost (1992 $)	Present Value of Energy Savings (1992 $)	Present Value of Demand Savings (1992 $)	Present Value of O&M Savings (1992 $)	Present Value of Replace. Savings (1992 $)	Present Value of Total Savings (1992 $)	Net Present Value (1992 $)
Motors	ROF	SAa Booster Pump	Effic.-2		6 mbp-100		Elect.	Elect.	$4,087	$16,678	(a)	$0	$3,810	$20,488	$16,401
Motors	ROF	SAb Booster Pump	Effic.-2		7 mbp-100		Elect.	Elect.	$4,087	$16,678	(a)	$0	$3,810	$20,488	$16,401
Motors	ROF	SAc Booster Pump	Effic.-2		8 mbp-100		Elect.	Elect.	$4,087	$16,678	(a)	$0	$3,810	$20,488	$16,401
Motors	ROF	SAd Booster Pump	Effic.-2		9 mbp-100		Elect.	Elect.	$4,087	$16,678	(a)	$0	$3,810	$20,488	$16,401
Motors	ROF	SAe Booster Pump	Effic.-2		10 mbp-150		Elect.	Elect.	$6,402	$51,407	(a)	$0	$6,697	$58,104	$51,701
Motors	ROF	SAf Booster Pump	Effic.-2		11 mbp-150		Elect.	Elect.	$6,402	$51,407	(a)	$0	$6,697	$58,104	$51,701
Motors	ROF	SAg Booster Pump	Effic.-2		12 mbp-150		Elect.	Elect.	$6,402	$51,407	(a)	$0	$6,697	$58,104	$51,701
Motors	ROF	SAh Booster Pump	Effic.-2		13 mbp-150		Elect.	Elect.	$6,402	$51,407	(a)	$0	$6,697	$58,104	$51,701
Motors	ROF	SV Booster Pump	Effic.-2		14 mbp-400		Elect.	Elect.	$14,358	$14,248	(a)	$0	$11,945	$26,193	$11,836
Motors	ROF	Sewage Station	Effic.-1		1 mep-5		393 Elect.	Elect.	$489	$4,930	$688	$0	$215	$5,833	$5,344
Motors	ROF	Sewage Station	Effic.-1		2 mep-5		393 Elect.	Elect.	$489	$4,930	$688	$0	$215	$5,833	$5,344
Motors	ROF	Sewage Station	Effic.-1		3 mep-3		488 Elect.	Elect.	$420	-$2,682	-$374	$0	$212	-$2,844	-$3,264
Motors	ROF	Sewage Station	Effic.-1		4 mep-3		488 Elect.	Elect.	$420	-$2,683	-$374	$0	$212	-$2,845	-$3,266
Motors	ROF	Sewage Station	Effic.-1		5 mep-1.33		535 Elect.	Elect.	$338	$1,037	$145	$0	$40	$1,222	$884
Motors	ROF	Sewage Station	Effic.-1		6 mep-2		743 Elect.	Elect.	$338	$1,560	$218	$0	$40	$1,817	$1,479
Motors	ROF	Sewage Station	Effic.-1		7 mep-7.5		743 Elect.	Elect.	$665	$8,255	$1,152	$0	$289	$9,696	$9,030
Motors	ROF	Sewage Station	Effic.-1		8 mep-7.5		743 Elect.	Elect.	$665	$8,255	$1,152	$0	$289	$9,696	$9,030
Motors	ROF	Sewage Station	Effic.-1		9 mep-3		769 Elect.	Elect.	$420	-$2,683	-$374	$0	$212	-$2,845	-$3,266
Motors	ROF	Sewage Station	Effic.-1		10 mep-3		896 Elect.	Elect.	$420	-$2,682	-$374	$0	$212	-$2,844	-$3,264
Motors	ROF	Sewage Station	Effic.-1		11 mep-3		896 Elect.	Elect.	$420	-$2,682	-$374	$0	$212	-$2,844	-$3,264
Motors	ROF	Sewage Station	Effic.-1		12 mep-1.5		896 Elect.	Elect.	$312	$1,180	$162	$0	$75	$1,397	$1,085
Motors	ROF	Sewage Station	Effic.-1		13 mep-1		1801 Elect.	Elect.	$282	$729	$102	$0	$161	$991	$709
Motors	ROF	Sewage Station	Effic.-1		14 mep-2		21150 Elect.	Elect.	$338	$1,559	$217	$0	$40	$1,816	$1,478
Motors	ROF	Sewage Station	Effic.-1		15 mep-3		23260 Elect.	Elect.	$420	-$2,682	-$374	$0	$212	-$2,844	-$3,264
Motors	ROF	Sewage Station	Effic.-1		16 mep-3		23260 Elect.	Elect.	$420	-$2,682	-$374	$0	$212	-$2,844	-$3,264
Motors	ROF	Sewage Station	Effic.-2		1 mep-5		393 Elect.	Elect.	$418	$3,684	$514	$0	$384	$4,581	$4,164
Motors	ROF	Sewage Station	Effic.-2		2 mep-5		393 Elect.	Elect.	$418	$3,684	$514	$0	$384	$4,581	$4,164
Motors	ROF	Sewage Station	Effic.-2		3 mep-3		488 Elect.	Elect.	$310	$1,929	$269	$0	$473	$2,671	$2,361
Motors	ROF	Sewage Station	Effic.-2		4 mep-3		488 Elect.	Elect.	$310	$1,928	$269	$0	$473	$2,670	$2,360
Motors	ROF	Sewage Station	Effic.-2		5 mep-1.33		535 Elect.	Elect.	$395	$855	$119	$0	-$95	$880	$485
Motors	ROF	Sewage Station	Effic.-2		6 mep-2		743 Elect.	Elect.	$395	$1,286	$179	$0	$95	$1,371	$976
Motors	ROF	Sewage Station	Effic.-2		7 mep-7.5		743 Elect.	Elect.	$547	$6,218	$867	$0	$572	$7,657	$7,111
Motors	ROF	Sewage Station	Effic.-2		8 mep-7.5		743 Elect.	Elect.	$547	$6,218	$867	$0	$572	$7,657	$7,111
Motors	ROF	Sewage Station	Effic.-2		9 mep-3		769 Elect.	Elect.	$310	$1,928	$269	$0	$473	$2,670	$2,360
Motors	ROF	Sewage Station	Effic.-2		10 mep-3		896 Elect.	Elect.	$310	$1,929	$269	$0	$473	$2,671	$2,361
Motors	ROF	Sewage Station	Effic.-2		11 mep-3		896 Elect.	Elect.	$310	$1,929	$269	$0	$473	$2,671	$2,361
Motors	ROF	Sewage Station	Effic.-2		12 mep-1.5		896 Elect.	Elect.	$376	$717	$100	$0	-$79	$739	$362
Motors	ROF	Sewage Station	Effic.-2		13 mep-1		1801 Elect.	Elect.	$255	$363	$51	$0	$227	$640	$386
Motors	ROF	Sewage Station	Effic.-2		14 mep-2		21150 Elect.	Elect.	$395	$1,285	$179	$0	-$95	$1,370	$975
Motors	ROF	Sewage Station	Effic.-2		15 mep-3		23260 Elect.	Elect.	$310	$1,929	$269	$0	$473	$2,671	$2,361
Motors	ROF	Sewage Station	Effic.-2		16 mep-3		23260 Elect.	Elect.	$310	$1,929	$269	$0	$473	$2,671	$2,361
Motors	ROF	Sewage Station	2-SPD		1 mep-5		393 Elect.	Elect.	$748	$8,862	-$6	$0	-$404	$8,453	$7,705
Motors	ROF	Sewage Station	2-SPD		2 mep-5		393 Elect.	Elect.	$748	$8,862	-$6	$0	-$404	$8,453	$7,705
Motors	ROF	Sewage Station	2-SPD		3 mep-3		488 Elect.	Elect.	$641	$4,902	$87	$0	-$315	$4,500	$3,859
Motors	ROF	Sewage Station	2-SPD		4 mep-3		488 Elect.	Elect.	$641	$4,901	-$87	$0	-$315	$4,499	$3,858
Motors	ROF	Sewage Station	2-SPD		5 mep-1.33		535 Elect.	Elect.	$512	$1,939	-$85	$0	-$375	$1,480	$968
Motors	ROF	Sewage Station	2-SPD		6 mep-2		743 Elect.	Elect.	$512	$3,046	-$102	$0	-$375	$2,570	$2,057
Motors	ROF	Sewage Station	2-SPD		7 mep-7.5		743 Elect.	Elect.	$1,034	$16,904	$465	$0	-$590	$16,779	$15,745
Motors	ROF	Sewage Station	2-SPD		8 mep-7.5		743 Elect.	Elect.	$1,034	$16,904	$465	$0	-$590	$16,779	$15,745
Motors	ROF	Sewage Station	2-SPD		9 mep-3		769 Elect.	Elect.	$641	$4,901	-$87	$0	-$315	$4,499	$3,858
Motors	ROF	Sewage Station	2-SPD		10 mep-3		896 Elect.	Elect.	$641	$4,902	-$87	$0	-$315	$4,500	$3,859
Motors	ROF	Sewage Station	2-SPD		11 mep-3		896 Elect.	Elect.	$641	$4,902	-$87	$0	-$315	$4,500	$3,859
Motors	ROF	Sewage Station	2-SPD		12 mep-1.5		896 Elect.	Elect.	$469	$2,187	-$96	$0	-$300	$1,791	$1,321
Motors	ROF	Sewage Station	2-SPD		13 mep-1		1801 Elect.	Elect.	$427	$1,391	-$77	$0	-$184	$1,130	$703
Motors	ROF	Sewage Station	2-SPD		14 mep-2		21150 Elect.	Elect.	$512	$3,045	-$102	$0	-$375	$2,569	$2,056
Motors	ROF	Sewage Station	2-SPD		15 mep-3		23260 Elect.	Elect.	$641	$4,902	-$87	$0	-$315	$4,500	$3,859
Motors	ROF	Sewage Station	2-SPD		16 mep-3		23260 Elect.	Elect.	$641	$4,902	-$87	$0	-$315	$4,500	$3,859
Motors	ROF	Lift Station	Effic.-1		1 mlp-15		19456 Elect.	Elect.	$1,041	$1,370	(a)	$0	$848	$2,218	$1,177
Motors	ROF	Lift Station	Effic.-1		2 mlp-25		13630 Elect.	Elect.	$1,472	$2,400	(a)	$0	$1,239	$3,639	$2,168
Motors	ROF	Lift Station	Effic.-2		1 mlp-15		19456 Elect.	Elect.	$883	$1,117	(a)	$0	$906	$2,023	$1,140
Motors	ROF	Lift Station	Effic.-2		2 mlp-25		13630 Elect.	Elect.	$1,301	$2,001	(a)	$0	$1,301	$3,302	$2,001

TABLE 4.4. (contd)

ERO Category	RI or ROF	Equipment	Description of ERO	ID	ID2	Facility	Exist. Fuel	Result. Fuel(s)	Present Value of Installed Cost (1992 $)	Present Value of Energy Savings (1992 $)	Present Value of Demand Savings (1992 $)	Present Value of O&M Savings (1992 $)	Present Value of Replace. Savings (1992 $)	Present Value of Total Savings (1992 $)	Net Present Value (1992 $)
Motors	ROF	fan, exhaust	Effic.-1		1 mef-2		715 Elect.	Elect.	$236	$222	(a)	$0	$177	$399	$163
Motors	ROF	air shower	Effic.-1		2 mf-5		715 Elect.	Elect.	$341	$695	(a)	$0	$291	$986	$645
Motors	ROF	fan, supply	Effic.-1		3 mef-1.5		715 Elect.	Elect.	$217	$165	(a)	$0	$172	$337	$119
Motors	ROF	fan, exhaust	Effic.-1		4 mef-1.5		715 Elect.	Elect.	$217	$165	(a)	$0	$172	$337	$119
Motors	ROF	fan, supply	Effic.-1		5 mef-7.5		715 Elect.	Elect.	$464	$1,159	(a)	$0	$395	$1,554	$1,090
Motors	ROF	fan, supply	Effic.-1		6 mef-25		715 Elect.	Elect.	$1,027	$4,246	(a)	$0	$912	$5,158	$4,131
Motors	ROF	fan, exhaust	Effic.-1		7 mef-1.5		715 Elect.	Elect.	$217	$165	(a)	$0	$172	$337	$119
Motors	ROF	fan, exhaust	Effic.-1		8 mef-1.5		715 Elect.	Elect.	$217	$165	(a)	$0	$172	$337	$119
Motors	ROF	fan, supply	Effic.-1		9 mef-10		715 Elect.	Elect.	$551	$1,535	(a)	$0	$425	$1,960	$1,409
Motors	ROF	fan, exhaust	Effic.-1		10 mef-5		715 Elect.	Elect.	$341	$695	(a)	$0	$291	$986	$645
Motors	ROF	pump, condenser	Effic.-1		11 mcp-15		715 Elect.	Elect.	$726	$2,427	(a)	$0	$629	$3,056	$2,330
Motors	ROF	fan, exhaust	Effic.-1		12 mef-10		715 Elect.	Elect.	$551	$1,535	(a)	$0	$425	$1,960	$1,409
Motors	ROF	pump, chilled water	Effic.-1		13 mcwp-3		715 Elect.	Elect.	$293	-$351	(a)	$0	$256	-$95	-$388
Motors	ROF	pump, chiller recirc	Effic.-1		14 mcwp-1.5		715 Elect.	Elect.	$217	$165	(a)	$0	$172	$337	$119
Motors	ROF	pump, air washer	Effic.-1		15 mf-7.5		715 Elect.	Elect.	$464	$1,159	(a)	$0	$395	$1,554	$1,090
Motors	ROF	fan, exhaust	Effic.-1		16 mef 1.5		715 Elect.	Elect.	$217	$165	(a)	$0	$172	$337	$119
Motors	ROF	fan, supply	Effic.-1		17 mef-15		715 Elect.	Elect.	$726	$2,427	(a)	$0	$629	$3,056	$2,330
Motors	ROF	fan, supply	Effic.-1		18 mef-15		715 Elect.	Elect.	$726	$2,427	(a)	$0	$629	$3,056	$2,330
Motors	ROF	fan, exhaust	Effic.-2		1 mef-2		715 Elect.	Elect.	$278	$184	(a)	$0	$175	$360	$84
Motors	ROF	air shower	Effic.-2		2 mf-5		715 Elect.	Elect.	$291	$525	(a)	$0	$293	$818	$527
Motors	ROF	fan, supply	Effic.-2		3 mef-1.5		715 Elect.	Elect.	$263	$105	(a)	$0	$170	$274	$12
Motors	ROF	fan, exhaust	Effic.-2		4 mef-1.5		715 Elect.	Elect.	$263	$105	(a)	$0	$170	$274	$12
Motors	ROF	fan, supply	Effic.-2		5 mef-7.5		715 Elect.	Elect.	$381	$882	(a)	$0	$399	$1,281	$900
Motors	ROF	fan, supply	Effic.-2		6 mef-25		715 Elect.	Elect.	$908	$3,560	(a)	$0	$917	$4,477	$3,569
Motors	ROF	fan, exhaust	Effic.-2		7 mef-1.5		715 Elect.	Elect.	$263	$105	(a)	$0	$170	$274	$12
Motors	ROF	fan, exhaust	Effic.-2		8 mef-1.5		715 Elect.	Elect.	$263	$105	(a)	$0	$170	$274	$12
Motors	ROF	fan, supply	Effic.-2		9 mef-10		715 Elect.	Elect.	$470	$1,214	(a)	$0	$429	$1,643	$1,173
Motors	ROF	fan, exhaust	Effic.-2		10 mef-5		715 Elect.	Elect.	$291	$525	(a)	$0	$293	$818	$527
Motors	ROF	pump, condenser	Effic.-2		11 mcp-15		715 Elect.	Elect.	$616	$1,993	(a)	$0	$635	$2,627	$2,011
Motors	ROF	fan, exhaust	Effic.-2		12 mef-10		715 Elect.	Elect.	$470	$1,214	(a)	$0	$429	$1,643	$1,173
Motors	ROF	pump, chilled water	Effic.-2		13 mcwp-3		715 Elect.	Elect.	$217	$277	(a)	$0	$260	$536	$320
Motors	ROF	pump, chiller recirc	Effic.-2		14 mcwp-1.5		715 Elect.	Elect.	$263	$105	(a)	$0	$170	$274	$12
Motors	ROF	pump, air washer	Effic.-2		15 mf-7.5		715 Elect.	Elect.	$381	$882	(a)	$0	$399	$1,281	$900
Motors	ROF	fan, exhaust	Effic.-2		16 mef-1.5		715 Elect.	Elect.	$263	$105	(a)	$0	$170	$274	$12
Motors	ROF	fan, supply	Effic.-2		17 mef-15		715 Elect.	Elect.	$616	$1,993	(a)	$0	$635	$2,627	$2,011
Motors	ROF	fan, supply	Effic.-2		18 mef-15		715 Elect.	Elect.	$616	$1,993	(a)	$0	$635	$2,627	$2,011
Motors	ROF	pump	Effic.-1		1 mp-1.5		717 Elect.	Elec.	$312	$149	(a)	$0	$223	$373	$61
Motors	ROF	fan	Effic.-1		2 mf-40		717 Elect.	Elect.	$2,099	$12,677	(a)	$0	$1,496	$14,174	$12,074
Motors	ROF	pump	Effic.-1		3 mp-5		717 Elect.	Elect.	$489	$1,258	(a)	$0	$389	$1,648	$1,159
Motors	ROF	pump	Effic.-1		4 mp-1.5		717 Elect.	Elect.	$312	$299	(a)	$0	$223	$522	$210
Motors	ROF	pump	Effic.-1		5 mp-5		717 Elect.	Elect.	$489	$1,258	(a)	$0	$389	$1,648	$1,159
Motors	ROF	fan	Effic.-1		6 mf-40		717 Elect.	Elect.	$2,099	$12,677	(a)	$0	$1,496	$14,174	$12,074
Motors	ROF	pump	Effic.-1		7 mp-1.5		717 Elect.	Elect.	$312	$149	(a)	$0	$223	$373	$61
Motors	ROF	fan	Effic.-1		8 mf-40		717 Elect.	Elec.	$2,099	$12,677	(a)	$0	$1,496	$14,174	$12,074
Motors	ROF	pump	Effic.-1		9 mp-1.5		717 Elect.	Elect.	$312	$299	(a)	$0	$223	$522	$210
Motors	ROF	fan	Effic.-1		10 mf-75		717 Elect.	Elect.	$4,017	$12,184	(a)	$0	$1,981	$14,166	$10,148
Motors	ROF	fan	Effic.-1		11 mf-75		717 Elect.	Elect.	$4,017	$12,184	(a)	$0	$1,981	$14,166	$10,148
Motors	ROF	pump	Effic.-1		12 mp-1		717 Elect.	Elect.	$292	$188	(a)	$0	$240	$428	$146
Motors	ROF	pump	Effic.-1		13 mp-1.5		717 Elect.	Elect.	$312	$149	(a)	$0	$223	$373	$61
Motors	ROF	pump	Effic.-1		14 mp-1.5		717 Elect.	Elect.	$312	$149	(a)	$0	$223	$373	$61
Motors	ROF	pump	Effic.-1		15 mp-1		717 Elect.	Elect.	$282	$188	(a)	$0	$240	$428	$146
Motors	ROF	pump	Effic.-1		16 mp-10		717 Elect.	Elect.	$790	$1,390	(a)	$0	$547	$1,937	$1,147
Motors	ROF	fan	Effic.-1		17 mf-40		717 Elect.	Elect.	$2,099	$12,677	(a)	$0	$1,496	$14,174	$12,074
Motors	ROF	fan	Effic.-1		18 mf-75		717 Elect.	Elect.	$4,017	$12,184	(a)	$0	$1,981	$14,166	$10,148
Motors	ROF	pump	Effic.-1		19 mp-10		717 Elect.	Elect.	$790	$1,390	(a)	$0	$547	$1,937	$1,147
Motors	ROF	fan	Effic.-1		20 mf-75		717 Elect.	Elect.	$4,017	$12,184	(a)	$0	$1,981	$14,166	$10,148
Motors	ROF	pump	Effic.-2		1 mp-1.5		717 Elect.	Elect.	$376	$95	(a)	$0	$200	$295	-$82
Motors	ROF	fan	Effic.-2		2 mf-40		717 Elect.	Elect.	$1,801	$10,314	(a)	$0	$1,804	$11,918	$10,117
Motors	ROF	pump	Effic.-2		3 mp-5		717 Elect.	Elect.	$418	$951	(a)	$0	$415	$1,366	$949
Motors	ROF	pump	Effic.-2		4 mp-1.5		717 Elect.	Elect.	$376	$190	(a)	$0	$200	$390	$13
Motors	ROF	pump	Effic.-2		5 mp-5		717 Elect.	Elect.	$418	$951	(a)	$0	$415	$1,366	$949

TABLE 4.4. (contd)

ERO Category	RI or ROF	Equipment	Description of ERO	ID	ID2	Facility	Exist. Fuel	Result. Fuel(s)	Present Value of Installed Cost (1992 $)	Present Value of Energy Savings (1992 $)	Present Value of Demand Savings (1992 $)	Present Value of O&M Savings (1992 $)	Present Value of Replace. Savings (1992 $)	Present Value of Total Savings (1992 $)	Net Present Value (1992 $)
Motors	ROF	fan	Effic.-2		8 mf-40		717 Elect.	Elect.	$1,801	$10,314	(a)	$0	$1,604	$11,918	$10,117
Motors	ROF	pump	Effic.-2		7 mp-1.5		717 Elect.	Elect.	$376	$95	(a)	$0	$200	$295	-$82
Motors	ROF	fan	Effic.-2		8 mf-40		717 Elect.	Elect.	$1,801	$10,314	(a)	$0	$1,604	$11,918	$10,117
Motors	ROF	pump	Effic.-2		9 mp-1.5		717 Elect.	Elect.	$376	$190	(a)	$0	$200	$390	$13
Motors	ROF	fan	Effic.-2		10 mf-75		717 Elect.	Elect.	$2,446	$11,059	(a)	$0	$2,549	$13,608	$11,163
Motors	ROF	fan	Effic.-2		11 mf-75		717 Elect.	Elect.	$2,446	$11,059	(a)	$0	$2,549	$13,608	$11,163
Motors	ROF	pump	Effic.-2		12 mp-1		717 Elect.	Elect.	$255	$98	(a)	$0	$250	$348	$94
Motors	ROF	pump	Effic.-2		13 mp-1.5		717 Elect.	Elect.	$376	$95	(a)	$0	$200	$295	-$82
Motors	ROF	pump	Effic.-2		14 mp-1.5		717 Elect.	Elect.	$376	$95	(a)	$0	$200	$295	-$82
Motors	ROF	pump	Effic.-2		15 mp-1		717 Elect.	Elect.	$255	$98	(a)	$0	$250	$348	$94
Motors	ROF	pump	Effic.-2		16 mp-10		717 Elect.	Elect.	$674	$1,099	(a)	$0	$589	$1,688	$1,014
Motors	ROF	fan	Effic.-2		17 mf-40		717 Elect.	Elect.	$1,801	$10,314	(a)	$0	$1,604	$11,918	$10,117
Motors	ROF	fan	Effic.-2		18 mf-75		717 Elect.	Elect.	$2,446	$11,059	(a)	$0	$2,549	$13,608	$11,163
Motors	ROF	pump	Effic.-2		19 mp-10		717 Elect.	Elect.	$674	$1,099	(a)	$0	$589	$1,688	$1,014
Motors	ROF	fan	Effic.-2		20 mf-75		717 Elect.	Elect.	$2,446	$11,059	(a)	$0	$2,549	$13,608	$11,163
Motors	ROF	fan, exhaust	Effic.-1		1 mef-60		719 Elect.	Elect.	$1,773	$8,185	(a)	$0	$1,559	$9,744	$7,971
Motors	ROF	pump, chilled water circ	Effic.-1		2 mcwp-75		719 Elect.	Elect.	$2,450	$5,130	(a)	$0	$1,654	$6,784	$4,335
Motors	ROF	pump, chilled water circ	Effic.-1		3 mcwp-10		719 Elect.	Elect.	$482	$468	(a)	$0	$390	$858	$376
Motors	ROF	pump, chilled water circ	Effic.-1		4 mcwp-10		719 Elect.	Elect.	$482	$468	(a)	$0	$390	$858	$376
Motors	ROF	pump, hot water	Effic.-1		5 mhwp-15		719 Elect.	Elect.	$535	$925	(a)	$0	$566	$1,491	$956
Motors	ROF	pump, chilled water circ	Effic.-1		6 mcwp-75		719 Elect.	Elect.	$2,450	$5,130	(a)	$0	$1,654	$6,784	$4,335
Motors	ROF	pump, hot water	Effic.-1		7 mhwp-15		719 Elect.	Elect.	$535	$925	(a)	$0	$566	$1,491	$956
Motors	ROF	pump, chilled water circ	Effic.-1		8 mcwp-10		719 Elect.	Elect.	$482	$468	(a)	$0	$390	$858	$376
Motors	ROF	pump, chilled water circ	Effic.-1		9 mcwp-10		719 Elect.	Elect.	$482	$468	(a)	$0	$390	$858	$376
Motors	ROF	fan, supply	Effic.-1		10 mef-300		719 Elect.	Elect.	$7,524	$20,521	(a)	$0	$6,819	$27,339	$19,815
Motors	ROF	fan, booster	Effic.-1		11 mbf-300		719 Elect.	Elect.	$7,524	$20,521	(a)	$0	$6,819	$27,339	$19,815
Motors	ROF	fan, booster	Effic.-1		12 mbf-300		719 Elect.	Elect.	$7,524	$20,521	(a)	$0	$6,819	$27,339	$19,815
Motors	ROF	pump, chilled water circ	Effic.-1		13 mpcw-10		719 Elect.	Elect.	$482	$468	(a)	$0	$390	$858	$376
Motors	ROF	fan, exhaust	Effic.-2		1 mef-60		719 Elect.	Elect.	$1,547	$7,023	(a)	$0	$1,536	$8,559	$7,012
Motors	ROF	pump, chilled water circ	Effic.-2		2 mcwp-75		719 Elect.	Elect.	$1,491	$4,656	(a)	$0	$1,556	$6,212	$4,721
Motors	ROF	pump, chilled water circ	Effic.-2		3 mcwp-10		719 Elect.	Elect.	$411	$370	(a)	$0	$382	$753	$342
Motors	ROF	pump, chilled water circ	Effic.-2		4 mcwp-10		719 Elect.	Elect.	$411	$370	(a)	$0	$382	$753	$342
Motors	ROF	pump, hot water	Effic.-2		5 mhwp-15		719 Elect.	Elect.	$538	$760	(a)	$0	$556	$1,315	$777
Motors	ROF	pump, chilled water circ	Effic.-2		6 mcwp-75		719 Elect.	Elect.	$1,491	$4,656	(a)	$0	$1,556	$6,212	$4,721
Motors	ROF	pump, hot water	Effic.-2		7 mhwp-15		719 Elect.	Elect.	$538	$760	(a)	$0	$556	$1,315	$777
Motors	ROF	pump, chilled water circ	Effic.-2		8 mcwp-10		719 Elect.	Elect.	$411	$370	(a)	$0	$382	$753	$342
Motors	ROF	pump, chilled water circ	Effic.-2		9 mcwp-10		719 Elect.	Elect.	$411	$370	(a)	$0	$382	$753	$342
Motors	ROF	fan, supply	Effic.-2		10 mef-300		719 Elect.	Elect.	$6,589	$19,638	(a)	$0	$6,723	$26,361	$19,772
Motors	ROF	fan, booster	Effic.-2		11 mbf-300		719 Elect.	Elect	$6,589	$19,638	(a)	$0	$6,723	$26,361	$19,772
Motors	ROF	fan, booster	Effic.-2		12 mbf-300		719 Elect.	Elect.	$6,589	$19,638	(a)	$0	$6,723	$26,361	$19,772
Motors	ROF	pump, chilled water circ	Effic.-2		13 mpcw-10		719 Elect	Elect.	$411	$370	(a)	$0	$382	$753	$342
Motors	ROF	heat exchanger and pump	Effic.-1		1 mp-1.5		730 Elect.	Elect.	$312	$1,006	(a)	$0	$223	$1,229	$917
Motors	ROF	fan, rack supply	Effic.-1		2 mf-5		730 Elect.	Elect.	$489	$2,202	(a)	$0	$389	$2,592	$2,103
Motors	ROF	fan, supply, tunnel	Effic.-1		3 mef-50		730 Elect.	Elect.	$2,464	$64,580	$9,010	$0	$2,046	$75,636	$73,172
Motors	ROF	fan, vehicle recorder rm	Effic.-1		4 mf-5		730 Elect.	Elect.	$489	$4,233	(a)	$0	$389	$4,623	$4,134
Motors	ROF	fan, exhaust "	Effic.-1		5 mef-15		730 Elect.	Elect.	$1,041	$14,783	(a)	$0	$848	$15,631	$14,590
Motors	ROF	pump, chilled water	Effic.-1		6 mcwp-15		730 Elect.	Elect.	$1,041	$14,783	(a)	$0	$848	$15,631	$14,590
Motors	ROF	fan, control rm 101	Effic.-1		7 mf-2		730 Elect.	Elect.	$338	$1,351	(a)	$0	$225	$1,576	$1,238
Motors	ROF	pump, air wash	Effic.-1		8 mp-15		730 Elect.	Elect.	$1,041	$14,783	(a)	$0	$848	$15,631	$14,590
Motors	ROF	fan, control rm 103	Effic.-1		9 mf-5		730 Elect.	Elect.	$489	$4,233	(a)	$0	$389	$4,623	$4,134
Motors	ROF	heat exchanger and pump	Effic.-1		10 mp-1.5		730 Elect.	Elect.	$312	$1,006	(a)	$0	$223	$1,229	$917
Motors	ROF	fan, control rm 102	Effic.-1		11 mf-2		730 Elect.	Elect.	$338	$1,351	(a)	$0	$225	$1,576	$1,238
Motors	ROF	fan, supply tunnel 3	Effic.-1		12 mf-10		730 Elect.	Elect.	$790	$11,274	$1,573	$0	$547	$13,393	$12,603
Motors	ROF	pump, evaporative condenser	Effic.-1		13 mcp-1.5		730 Elect.	Elect.	$312	$1,006	(a)	$0	$223	$1,229	$917
Motors	ROF	fan, launch control racks	Effic.-1		14 mf-5		730 Elect.	Elect.	$489	$2,202	(a)	$0	$389	$2,592	$2,103
Motors	ROF	fan, supply	Effic.-1		15 mef-3		730 Elect.	Elect.	$420	-$2,138	(a)	$0	$346	-$1,792	$2,213
Motors	ROF	fan, evaporative condenser	Effic.-1		16 mcf-10		730 Elect.	Elect.	$790	$9,351	(a)	$0	$547	$9,898	$9,108
Motors	ROF	fan, launch control rm	Effic.-1		17 mf-7.5		730 Elect.	Elect.	$665	$7,063	(a)	$0	$529	$7,592	$6,926
Motors	ROF	fan, booster landfines rm	Effic.-1		18 mbf-5		730 Elect.	Elect.	$489	$4,233	(a)	$0	$389	$4,623	$4,134
Motors	ROF	heat exchanger and pump	Effic.-2		1 mp-1.5		730 Elect.	Elect.	$376	$638	(a)	$0	$200	$838	$462
Motors	ROF	fan, rack supply	Effic.-2		2 mf-5		730 Elect.	Elect.	$418	$1,665	(a)	$0	$415	$2,080	$1,662

TABLE 4.4. (contd)

ERO Category	RI or ROF	Equipment	Description of ERO	ID	ID2	Facility	Exist. Fuel	Result. Fuel(s)	Present Value of Installed Cost (1992 $)	Present Value of Energy Savings (1992 $)	Present Value of Demand Savings (1992 $)	Present Value of O&M Savings (1992 $)	Present Value of Replace. Savings (1992 $)	Present Value of Total Savings (1992 $)	Net Present Value (1992 $)
Motors	ROF	fan, supply, tunnel	Effic.-2		3 msf-50		730 Elect.	Elect.	$1,98[illegible]	$55,294	$7,714	$0	$2,218	$65,226	$63,237
Motors	ROF	fan, vehicle recorder rm	Effic.-2		4 mf-5		730 Elect.	Elect.	$41b	$3,200	(a)	$0	$415	$3,615	$3,197
Motors	ROF	fan, exhaust	Effic.-2		5 mef-15		730 Elect.	Elect.	$883	$12,139	(a)	$0	$906	$13,044	$12,162
Motors	ROF	pump, chilled water	Effic.-2		6 mcwp-15		730 Elect.	Elect.	$883	$12,139	(a)	$0	$906	$13,044	$12,162
Motors	ROF	fan, control rm 101	Effic.-2		7 mf-2		730 Elect.	Elect.	$395	$1,124	(a)	$0	$205	$1,329	$934
Motors	ROF	pump, air wash	Effic.-2		8 mp-15		730 Elect.	Elect.	$883	$12,139	(a)	$0	$906	$13,044	$12,162
Motors	ROF	fan, control rm 103	Effic.-2		9 mf-5		730 Elect.	Elect.	$418	$3,200	(a)	$0	$415	$3,615	$3,197
Motors	ROF	heat exchanger and pump	Effic.-2		10 mp-1.5		730 Elect.	Elect.	$376	$638	(a)	$0	$200	$838	$462
Motors	ROF	fan, control rm 102	Effic.-2		11 mf-2		730 Elect.	Elect.	$395	$1,124	(a)	$0	$205	$1,329	$934
Motors	ROF	fan, supply tunnel 3	Effic.-2		12 mf-10		730 Elect.	Elect.	$874	$8,918	$1,244	$0	$589	$10,751	$10,077
Motors	ROF	pump, evaporative condenser	Effic.-2		13 mcp-1.5		730 Elect.	Elect.	$376	$638	(a)	$0	$200	$838	$462
Motors	ROF	fan, launch control racks	Effic.-2		14 mf-5		730 Elect.	Elect.	$418	$1,665	(a)	$0	$415	$2,080	$1,662
Motors	ROF	fan, supply	Effic.-2		15 mef-3		730 Elect.	Elect.	$310	$1,686	(a)	$0	$386	$2,072	$1,761
Motors	ROF	fan, evaporative condenser	Effic.-2		16 mcf-10		730 Elect.	Elect.	$874	$7,397	(a)	$0	$589	$7,986	$7,311
Motors	ROF	fan, launch control rm	Effic.-2		17 mf-7.5		730 Elect.	Elect.	$547	$5,373	(a)	$0	$572	$5,945	$5,398
Motors	ROF	fan, booster landlines rm	Effic.-2		18 mbf-5		730 Elect.	Elect.	$418	$3,200	(a)	$0	$415	$3,615	$3,197
Motors	ROF	fan	Effic.-1		1 mf-40		734 Elect.	Elect.	$2,099	$9,508	(a)	$0	$1,496	$11,004	$8,905
Motors	ROF	pump	Effic.-1		2 mp-5		734 Elect.	Elect.	$489	$944	(a)	$0	$389	$1,333	$845
Motors	ROF	fan	Effic.-1		3 mf-40		734 Elect.	Elect.	$2,099	$9,508	(a)	$0	$1,496	$11,004	$8,905
Motors	ROF	fan	Effic.-1		4 mf-40		734 Elect.	Elect.	$2,099	$9,508	(a)	$0	$1,496	$11,004	$8,905
Motors	ROF	pump	Effic.-1		5 mp-5		734 Elect.	Elect.	$489	$944	(a)	$0	$389	$1,333	$845
Motors	ROF	fan	Effic.-1		6 mf-40		734 Elect.	Elect.	$2,099	$9,508	(a)	$0	$1,496	$11,004	$8,905
Motors	ROF	fan	Effic.-2		1 mf-40		734 Elect.	Elect.	$1,801	$7,736	(a)	$0	$1,604	$9,340	$7,538
Motors	ROF	pump	Effic.-2		2 mp-5		734 Elect.	Elect.	$418	$713	(a)	$0	$415	$1,128	$711
Motors	ROF	fan	Effic.-2		3 mf-40		734 Elect.	Elect.	$1,801	$7,736	(a)	$0	$1,604	$9,340	$7,538
Motors	ROF	fan	Effic.-2		4 mf-40		734 Elect.	Elect.	$1,801	$7,736	(a)	$0	$1,604	$9,340	$7,538
Motors	ROF	pump	Effic.-2		5 mp-5		734 Elect.	Elect.	$418	$713	(a)	$0	$415	$1,128	$711
Motors	ROF	fan	Effic.-2		6 mf-40		734 Elect.	Elect.	$1,801	$7,736	(a)	$0	$1,604	$9,340	$7,538
Motors	ROF	fan, supply	Effic.-1		1 mef-15		738 Elect.	Elect.	$1,041	$3,298	(a)	$0	$848	$4,144	$3,103
Motors	ROF	fan, evaporative condenser	Effic.-1		2 mcf-10		738 Elect.	Elect.	$790	$2,085	(a)	$0	$547	$2,632	$1,842
Motors	ROF	fan, supply	Effic.-1		3 mef-25		738 Elect.	Elect.	$1,472	$5,767	(a)	$0	$1,239	$7,007	$5,535
Motors	ROF	fan, exhaust	Effic.-1		4 mef-2		738 Elect.	Elect.	$338	$301	(a)	$0	$225	$526	$188
Motors	ROF	fan, exhaust	Effic.-1		5 mef-1.5		738 Elect.	Elect.	$312	$224	(a)	$0	$223	$447	$136
Motors	ROF	fan, exhaust	Effic.-1		6 mef-5		738 Elect.	Elect.	$489	$944	(a)	$0	$389	$1,333	$845
Motors	ROF	fan, exhaust	Effic.-1		7 mef-1.5		738 Elect.	Elect.	$312	$224	(a)	$0	$223	$447	$136
Motors	ROF	fan, supply	Effic.-1		8 mef-10		738 Elect.	Elect.	$790	$2,085	(a)	$0	$547	$2,632	$1,842
Motors	ROF	fan, supply	Effic.-1		9 mef-10		738 Elect.	Elect.	$790	$2,085	(a)	$0	$547	$2,632	$1,842
Motors	ROF	fan, exhaust	Effic.-1		10 mef-1.5		738 Elect.	Elect.	$312	$224	(a)	$0	$223	$447	$136
Motors	ROF	fan, supply	Effic.-1		11 mef-7.5		738 Elect.	Elect.	$665	$1,575	(a)	$0	$529	$2,104	$1,439
Motors	ROF	fan, supply	Effic.-2		1 mef-15		738 Elect.	Elect.	$883	$2,706	(a)	$0	$906	$3,612	$2,729
Motors	ROF	fan, evaporative condenser	Effic.-2		2 mcf-10		738 Elect.	Elect.	$874	$1,649	(a)	$0	$589	$2,238	$1,564
Motors	ROF	fan, supply	Effic.-2		3 mef-25		738 Elect.	Elect.	$1,301	$4,835	(a)	$0	$1,301	$6,136	$4,835
Motors	ROF	fan, exhaust	Effic.-2		4 mef-2		738 Elect.	Elect.	$395	$251	(a)	$0	$205	$455	$60
Motors	ROF	fan, exhaust	Effic.-2		5 mef-1.5		738 Elect.	Elect.	$376	$142	(a)	$0	$200	$342	-$34
Motors	ROF	fan, exhaust	Effic.-2		6 mef-5		738 Elect.	Elect.	$418	$713	(a)	$0	$415	$1,128	$711
Motors	ROF	fan, exhaust	Effic.-2		7 mef-1.5		738 Elect.	Elect.	$376	$142	(a)	$0	$200	$342	$34
Motors	ROF	fan, supply	Effic.-2		8 mef-10		738 Elect.	Elect.	$874	$1,649	(a)	$0	$589	$2,238	$1,564
Motors	ROF	fan, supply	Effic.-2		9 mef-10		738 Elect.	Elect.	$874	$1,649	(a)	$0	$589	$2,238	$1,564
Motors	ROF	fan, exhaust	Effic.-2		10 mef-1.5		738 Elect.	Elect.	$376	$142	(a)	$0	$200	$342	$34
Motors	ROF	fan, supply	Effic.-2		11 mef-7.5		738 Elect.	Elect.	$547	$1,198	(a)	$0	$572	$1,770	$1,223
Motors	ROF	pump, hot water circ	Effic.-1		1 mhwp-1		945 Elect.	Elect.	$247	$620	$86	$0	$213	$919	$673
Motors	ROF	pump	Effic.-1		2 mp-1.5		945 Elect.	Elect.	$272	$983	$137	$0	$202	$1,322	$1,050
Motors	ROF	air handler	Effic.-1		3 msf-2		945 Elect.	Elect.	$295	$1,268	(a)	$0	$205	$1,473	$1,178
Motors	ROF	air handler	Effic.-1		4 msf-20		945 Elect.	Elect.	$1,149	$8,156	(a)	$0	$957	$9,113	$7,964
Motors	ROF	pump, hot water circ	Effic.-2		1 mhwp-1		945 Elect.	Elect.	$223	$323	$45	$0	$220	$587	$365
Motors	ROF	pump	Effic.-2		2 mp-1.5		945 Elect.	Elect.	$329	$624	$87	$0	$187	$899	$570
Motors	ROF	air handler	Effic.-2		3 msf-2		945 Elect.	Elect.	$345	$1,055	(a)	$0	$192	$1,247	$902
Motors	ROF	air handler	Effic.-2		4 msf-20		945 Elect.	Elect.	$1,003	$7,020	(a)	$0	$994	$8,014	$7,011
Motors	ROF	condenser pump	Effic.-1		1 mcp-25		8401 Elect.	Elect.	$1,472	$12,859	(a)	$0	$1,239	$14,098	$12,627
Motors	ROF	fan, exhaust	Effic.-1		2 mef-7.5		8401 Elect.	Elect.	$665	$8,515	$1,188	$0	$529	$10,232	$9,567
Motors	ROF	fan, exhaust	Effic.-1		3 mef-5		8401 Elect.	Elect.	$489	$5,104	$712	$0	$389	$6,205	$5,717

TABLE 4.4. (contd)

ERO Category	RI or ROF	Equipment	Description of ERO	ID	ID2	Facility	Exist. Fuel	Result. Fuel(s)	Present Value of Installed Cost (1992 $)	Present Value of Energy Savings (1992 $)	Present Value of Demand Savings (1992 $)	Present Value of O&M Savings (1992 $)	Present Value of Replace. Savings (1992 $)	Present Value of Total Savings (1992 $)	Net Present Value (1992 $)
Motors	ROF	fan	Effic.-1		4 mf-20		8401	Elect.	Elect.	$1,315	$10,055	(a)	$0	$1,072	$11,127	$9,812
Motors	ROF	condenser pump	Effic.-1		5 mcp-40		8401	Elect.	Elect.	$2,099	$21,199	(a)	$0	$1,496	$22,696	$20,596
Motors	ROF	fan, exhaust	Effic.-1		6 mef-15		8401	Elect.	Elect.	$1,041	$17,822	$2,488	$0	$848	$21,157	$20,116
Motors	ROF	pump, water circ	Effic.-1		7 mcwp-10		8401	Elect.	Elect.	$790	$4,648	(a)	$0	$547	$5,195	$4,405
Motors	ROF	fan, cooling tower	Effic.-1		8 mctf-3		8401	Elect.	Elect.	$420	-$1,083	(a)	$0	$346	-$717	-$1,137
Motors	ROF	fan	Effic.-1		9 mf-20		8401	Elect.	Elect.	$1,315	$10,055	(a)	$0	$1,072	$11,127	$9,812
Motors	ROF	pump, cooling tower	Effic.-1		10 mct-15		8401	Elect.	Elect.	$1,041	$7,349	(a)	$0	$848	$8,197	$7,156
Motors	ROF	fan, exhaust	Effic.-1		11 mef-1		8401	Elect.	Elect.	$282	$315	(a)	$0	$240	$555	$273
Motors	ROF	condenser pump	Effic.-2		1 mcp-25		8401	Elect.	Elect.	$1,301	$10,780	(a)	$0	$1,301	$12,081	$10,780
Motors	ROF	fan, exhaust	Effic.-2		2 mef-7.5		8401	Elect.	Elect.	$547	$6,478	$904	$0	$572	$7,953	$7,407
Motors	ROF	fan, exhaust	Effic.-2		3 mef-5		8401	Elect.	Elect.	$418	$3,857	$538	$0	$415	$4,811	$4,393
Motors	ROF	fan	Effic.-2		4 mf-20		8401	Elect.	Elect.	$1,148	$8,054	(a)	$0	$1,133	$9,787	$8,639
Motors	ROF	condenser pump	Effic.-2		5 mcp-40		8401	Elect.	Elect.	$1,801	$17,248	(a)	$0	$1,604	$18,852	$17,050
Motors	ROF	fan, exhaust	Effic.-2		6 mef-15		8401	Elect.	Elect.	$883	$14,635	$2,042	$0	$906	$17,582	$16,699
Motors	ROF	pump, water circ	Effic.-2		7 mcwp-10		8401	Elect.	Elect.	$674	$3,677	(a)	$0	$589	$4,266	$3,592
Motors	ROF	fan, cooling tower	Effic.-2		8 mctf-3		8401	Elect.	Elect.	$310	$838	(a)	$0	$386	$1,224	$913
Motors	ROF	fan	Effic.-2		9 mf-20		8401	Elect.	Elect.	$1,148	$8,654	(a)	$0	$1,133	$9,787	$8,639
Motors	ROF	pump, cooling tower	Effic.-2		10 mct-15		8401	Elect.	Elect.	$883	$6,034	(a)	$0	$906	$6,940	$6,057
Motors	ROF	fan, exhaust	Effic.-2		11 mef-1		8401	Elect.	Elect.	$255	$164	(a)	$0	$250	$414	$159
Motors	RI	SY3 Well Pump	Effic.-1		1 wp-75			Elect.	Elect.	$3,912	$14,094	(a)	$0	$1,106	$15,200	$11,287
Motors	RI	SY5 Well Pump	Effic.-1		2 wp-60			Elect.	Elect.	$3,182	$15,909	(a)	$0	$1,530	$17,438	$14,256
Motors	RI	SY6 Well Pump	Effic.-1		3 wp-75			Elect.	Elect.	$4,396	$3	(a)	$0	$733	$737	-$3,659
Motors	RI	SA4 Well Pump	Effic.-1		4 wp-60			Elect.	Elect.	$3,182	$43,413	(a)	$0	$2,174	$45,587	$42,405
Motors	RI	SA5 Well Pump	Effic.-1		5 wp-75			Elect.	Elect.	$4,396	$101,830	(a)	$0	$1,781	$103,610	$99,215
Motors	RI	SA6 Well Pump	Effic.-1		6 wp-75			Elect.	Elect.	$4,396	$50,958	(a)	$0	$1,781	$52,739	$48,343
Motors	RI	SA7 Well Pump	Effic.-1		7 wp-75			Elect.	Elect.	$4,396	$56,040	(a)	$0	$1,781	$57,820	$53,425
Motors	RI	SV1 Well Pump	Effic.-1		8 wp-100			Elect.	Elect.	$4,788	$13,183	(a)	$0	$3,487	$16,670	$11,882
Motors	RI	SV3 Well Pump	Effic.-1		9 wp-100			Elect.	Elect.	$4,788	$14,319	(a)	$0	$3,487	$17,805	$13,017
Motors	RI	SY3 Well Pump	Effic.-2		1 wp-75			Elect.	Elect.	$2,676	$12,756	(a)	$0	$1,571	$14,327	$11,652
Motors	RI	SY5 Well Pump	Effic.-2		2 wp-60			Elect.	Elect.	$2,775	$13,588	(a)	$0	$1,683	$15,271	$12,496
Motors	RI	SY6 Well Pump	Effic.-2		3 wp-75			Elect.	Elect.	$2,676	$3	(a)	$0	$1,380	$1,383	-$1,293
Motors	RI	SA4 Well Pump	Effic.-2		4 wp-60			Elect.	Elect.	$2,775	$37,080	(a)	$0	$2,327	$39,407	$36,632
Motors	RI	SA5 Well Pump	Effic.-2		5 wp-75			Elect.	Elect.	$2,676	$92,169	(a)	$0	$2,427	$94,596	$91,920
Motors	RI	SA6 Well Pump	Effic.-2		6 wp-75			Elect.	Elect.	$2,676	$46,124	(a)	$0	$2,427	$48,551	$45,875
Motors	RI	SA7 Well Pump	Effic.-2		7 wp-75			Elect.	Elect.	$2,676	$50,723	(a)	$0	$2,427	$53,150	$50,475
Motors	RI	SV1 Well Pump	Effic.-2		8 wp-100			Elect.	Elect.	$4,472	$11,383	(a)	$0	$3,606	$14,988	$10,497
Motors	RI	SV3 Well Pump	Effic.-2		9 wp-100			Elect.	Elect.	$4,472	$12,342	(a)	$0	$3,606	$15,947	$11,475
Motors	RI	SYa Booster Pump	Effic.-1		1 mbp-250			Elect.	Elect.	$14,151	-$5,515	(a)	$0	$1,658	-$3,857	-$18,008
Motors	RI	SYb Booster Pump	Effic.-1		2 mbp-250			Elect.	Elect.	$14,151	-$5,515	(a)	$0	$1,658	-$3,857	-$18,008
Motors	RI	SYc Booster Pump	Effic.-1		3 mbp-250			Elect.	Elect.	$14,151	-$3,677	(a)	$0	$1,658	-$2,019	-$16,170
Motors	RI	SYd Booster Pump	Effic.-1		4 mbp-60			Elect.	Elect.	$3,182	$6,940	(a)	$0	$1,530	$8,469	$5,287
Motors	RI	SYe Booster Pump	Effic.-1		5 mbp-60			Elect.	Elect.	$3,182	$6,940	(a)	$0	$1,530	$8,469	$5,287
Motors	RI	SAa Booster Pump	Effic.-1		6 mbp-100			Elect.	Elect.	$4,788	$20,695	(a)	$0	$3,487	$24,182	$19,394
Motors	RI	SAb Booster Pump	Effic.-1		7 mbp-100			Elect.	Elect.	$4,788	$20,695	(a)	$0	$3,487	$24,182	$19,394
Motors	RI	SAc Booster Pump	Effic.-1		8 mbp-100			Elect.	Elect.	$4,788	$20,695	(a)	$0	$3,487	$24,182	$19,394
Motors	RI	SAd Booster Pump	Effic.-1		9 mbp-100			Elect.	Elect.	$4,788	$20,695	(a)	$0	$3,487	$24,182	$19,394
Motors	RI	SAe Booster Pump	Effic.-1		10 mbp-150			Elect.	Elect.	$8,046	$61,791	(a)	$0	$5,986	$67,776	$59,730
Motors	RI	SAf Booster Pump	Effic.-1		11 mbp-150			Elect.	Elect.	$8,046	$61,791	(a)	$0	$5,986	$67,776	$59,730
Motors	RI	SAg Booster Pump	Effic.-1		12 mbp-150			Elect.	Elect.	$8,046	$61,791	(a)	$0	$5,986	$67,776	$59,730
Motors	RI	SAh Booster Pump	Effic.-1		13 mbp-150			Elect.	Elect.	$8,046	$61,791	(a)	$0	$5,986	$67,776	$59,730
Motors	RI	SV Booster Pump	Effic.-1		14 mbp-400			Elect.	Elect.	$18,856	$16,446	(a)	$0	$10,045	$26,490	$7,635
Motors	RI	SYa Booster Pump	Effic.-2		1 mbp-250			Elect.	Elect.	$8,344	$8,561	(a)	$0	$3,842	$12,403	$4,059
Motors	RI	SYb Booster Pump	Effic.-2		2 mbp-250			Elect.	Elect.	$8,344	$8,561	(a)	$0	$3,842	$12,403	$4,059
Motors	RI	SYc Booster Pump	Effic.-2		3 mbp-250			Elect.	Elect.	$8,344	$5,707	(a)	$0	$3,842	$9,549	$1,205
Motors	RI	SYd Booster Pump	Effic.-2		4 mbp-60			Elect.	Elect.	$2,775	$4,681	(a)	$0	$1,683	$6,364	$3,589
Motors	RI	SYe Booster Pump	Effic.-2		5 mbp-60			Elect.	Elect.	$2,775	$4,681	(a)	$0	$1,683	$6,364	$3,589
Motors	RI	SAa Booster Pump	Effic.-2		6 mbp-100			Elect.	Elect.	$4,472	$17,837	(a)	$0	$3,606	$21,443	$16,971
Motors	RI	SAb Booster Pump	Effic.-2		7 mbp-100			Elect.	Elect.	$4,472	$17,837	(a)	$0	$3,606	$21,443	$16,971
Motors	RI	SAc Booster Pump	Effic.-2		8 mbp-100			Elect.	Elect.	$4,472	$17,837	(a)	$0	$3,606	$21,443	$16,971
Motors	RI	SAd Booster Pump	Effic.-2		9 mbp-100			Elect.	Elect.	$4,472	$17,837	(a)	$0	$3,606	$21,443	$16,971
Motors	RI	SAe Booster Pump	Effic.-2		10 mbp-150			Elect.	Elect.	$7,005	$54,979	(a)	$0	$6,377	$61,356	$54,351

TABLE 4.4. (contd)

ERO Category	RI or ROF	Equipment	Description of ERO	ID	ID2	Facility	Exist. Fuel	Result. Fuel(s)	Present Value of Installed Cost (1992 $)	Present Value of Energy Savings (1992 $)	Present Value of Demand Savings (1992 $)	Present Value of O&M Savings (1992 $)	Present Value of Replace. Savings (1992 $)	Present Value of Total Savings (1992 $)	Net Present Value (1992 $)
Motors	RI	SAf Booster Pump	Effic.-2		11 mbp-150		Elect.	Elect.	$7,005	$54,979	(a)	$0	$6,377	$61,356	$54,351
Motors	RI	SAg Booster Pump	Effic.-2		12 mbp-150		Elect.	Elect.	$7,005	$54,979	(a)	$0	$6,377	$61,356	$54,351
Motors	RI	SAh Booster Pump	Effic.-2		13 mbp-150		Elect.	Elect.	$7,005	$54,979	(a)	$0	$6,377	$61,356	$54,351
Motors	RI	SV Booster Pump	Effic.-2		14 mbp-400		Elect.	Elect.	$15,709	$15,239	(a)	$0	$11,228	$26,466	$10,757
Motors	RI	Sewage Station	Effic.-1		1 msp-5	393	Elect.	Elect.	$535	$5,273	$736	$0	$257	$6,265	$5,731
Motors	RI	Sewage Station	Effic.-1		2 msp-5	393	Elect.	Elect.	$535	$5,273	$736	$0	$257	$6,265	$5,731
Motors	RI	Sewage Station	Effic.-1		3 msp-3	488	Elect.	Elect.	$460	-$2,869	-$400	$0	$74	-$3,194	-$3,654
Motors	RI	Sewage Station	Effic.-1		4 msp-3	488	Elect.	Elect.	$460	-$2,869	-$400	$0	$74	-$3,198	-$3,655
Motors	RI	Sewage Station	Effic.-1		5 msp-1.33	535	Elect.	Elect.	$370	$1,109	$155	$0	$208	$1,472	$1,102
Motors	RI	Sewage Station	Effic.-1		6 msp-2	743	Elect.	Elect.	$370	$1,668	$233	$0	$102	$2,003	$1,633
Motors	RI	Sewage Station	Effic.-1		7 msp-7.5	743	Elect.	Elect.	$728	$8,829	$1,232	$0	$261	$10,322	$9,594
Motors	RI	Sewage Station	Effic.-1		8 msp-7.5	743	Elect.	Elect.	$728	$8,829	$1,232	$0	$261	$10,322	$9,594
Motors	RI	Sewage Station	Effic.-1		9 msp-3	769	Elect.	Elect.	$460	-$2,869	-$400	$0	$325	-$2,945	-$3,404
Motors	RI	Sewage Station	Effic.-1		10 msp-3	896	Elect.	Elect.	$460	-$2,868	-$400	$0	$325	-$2,943	-$3,403
Motors	RI	Sewage Station	Effic.-1		11 msp-3	896	Elect.	Elect.	$460	-$2,868	-$400	$0	$325	-$2,943	-$3,403
Motors	RI	Sewage Station	Effic.-1		12 msp-1.5	896	Elect.	Elect.	$341	$1,241	$173	$0	$208	$1,621	$1,280
Motors	RI	Sewage Station	Effic.-1		13 msp-1	1801	Elect.	Elect.	$309	$780	$109	$0	$161	$1,049	$740
Motors	RI	Sewage Station	Effic.-1		14 msp-2	21150	Elect.	Elect.	$370	$1,667	$233	$0	$208	$2,108	$1,738
Motors	RI	Sewage Station	Effic.-1		15 msp-3	23260	Elect.	Elect.	$460	-$2,868	-$400	$0	$325	-$2,943	-$3,403
Motors	RI	Sewage Station	Effic.-1		16 msp-3	23260	Elect.	Elect.	$460	-$2,868	-$400	$0	$325	-$2,943	-$3,403
Motors	RI	Sewage Station	Effic.-2		1 msp-5	393	Elect.	Elect.	$457	$3,940	$550	$0	$288	$4,775	$4,318
Motors	RI	Sewage Station	Effic.-2		2 msp-5	393	Elect.	Elect.	$457	$3,940	$550	$0	$288	$4,775	$4,318
Motors	RI	Sewage Station	Effic.-2		3 msp-3	488	Elect.	Elect.	$340	$2,063	$288	$0	$119	$2,470	$2,130
Motors	RI	Sewage Station	Effic.-2		4 msp-3	488	Elect.	Elect.	$340	$2,062	$288	$0	$119	$2,469	$2,129
Motors	RI	Sewage Station	Effic.-2		5 msp-1.33	535	Elect.	Elect.	$432	$914	$128	$0	$185	$1,227	$795
Motors	RI	Sewage Station	Effic.-2		6 msp-2	743	Elect.	Elect.	$432	$1,375	$192	$0	$79	$1,646	$1,214
Motors	RI	Sewage Station	Effic.-2		7 msp-7.5	743	Elect.	Elect.	$598	$6,650	$928	$0	$310	$7,888	$7,290
Motors	RI	Sewage Station	Effic.-2		8 msp-7.5	743	Elect.	Elect.	$598	$6,650	$928	$0	$310	$7,888	$7,290
Motors	RI	Sewage Station	Effic.-2		9 msp-3	769	Elect.	Elect.	$340	$2,062	$288	$0	$370	$2,720	$2,380
Motors	RI	Sewage Station	Effic.-2		10 msp-3	896	Elect.	Elect.	$340	$2,063	$288	$0	$370	$2,721	$2,381
Motors	RI	Sewage Station	Effic.-2		11 msp-3	896	Elect.	Elect.	$340	$2,063	$288	$0	$370	$2,721	$2,381
Motors	RI	Sewage Station	Effic.-2		12 msp-1.5	896	Elect.	Elect.	$412	$767	$107	$0	$181	$1,055	$643
Motors	RI	Sewage Station	Effic.-2		13 msp-1	1801	Elect.	Elect.	$279	$388	$54	$0	$172	$614	$336
Motors	RI	Sewage Station	Effic.-2		14 msp-2	21150	Elect.	Elect.	$432	$1,375	$192	$0	$185	$1,751	$1,319
Motors	RI	Sewage Station	Effic.-2		15 msp-3	23260	Elect.	Elect.	$340	$2,063	$288	$0	$370	$2,721	$2,381
Motors	RI	Sewage Station	Effic.-2		16 msp-3	23260	Elect.	Elect.	$340	$2,063	$288	$0	$370	$2,721	$2,381
Motors	RI	Sewage Station	2-SPD		1 msp-5	393	Elect.	Elect.	$818	$9,478	-$6	$0	$150	$9,622	$8,803
Motors	RI	Sewage Station	2-SPD		2 msp-5	393	Elect.	Elect.	$818	$9,478	-$6	$0	$150	$9,622	$8,803
Motors	RI	Sewage Station	2-SPD		3 msp-3	488	Elect.	Elect.	$702	$5,243	-$93	$0	-$17	$5,133	$4,432
Motors	RI	Sewage Station	2-SPD		4 msp-3	488	Elect.	Elect.	$702	$5,242	-$93	$0	-$17	$5,132	$4,431
Motors	RI	Sewage Station	2-SPD		5 msp-1.33	535	Elect.	Elect.	$561	$2,074	-$91	$0	$137	$2,120	$1,560
Motors	RI	Sewage Station	2-SPD		6 msp-2	743	Elect.	Elect.	$561	$3,258	-$109	$0	$31	$3,180	$2,619
Motors	RI	Sewage Station	2-SPD		7 msp-7.5	743	Elect.	Elect.	$1,132	$18,079	$497	$0	$109	$18,685	$17,554
Motors	RI	Sewage Station	2-SPD		8 msp-7.5	743	Elect.	Elect.	$1,132	$18,079	$497	$0	$109	$18,685	$17,554
Motors	RI	Sewage Station	2-SPD		9 msp-3	769	Elect.	Elect.	$702	$5,242	-$93	$0	$234	$5,383	$4,682
Motors	RI	Sewage Station	2-SPD		10 msp-3	896	Elect.	Elect.	$702	$5,243	-$93	$0	$234	$5,384	$4,683
Motors	RI	Sewage Station	2-SPD		11 msp-3	896	Elect.	Elect.	$702	$5,243	-$93	$0	$234	$5,384	$4,683
Motors	RI	Sewage Station	2-SPD		12 msp-1.5	896	Elect.	Elect.	$514	$2,339	-$102	$0	$143	$2,379	$1,866
Motors	RI	Sewage Station	2-SPD		13 msp-1	1801	Elect.	Elect.	$467	$1,488	-$82	$0	$101	$1,507	$1,039
Motors	RI	Sewage Station	2-SPD		14 msp-2	21150	Elect.	Elect.	$561	$3,257	-$109	$0	$137	$3,284	$2,724
Motors	RI	Sewage Station	2-SPD		15 msp-3	23260	Elect.	Elect.	$702	$5,243	-$93	$0	$234	$5,384	$4,683
Motors	RI	Sewage Station	2-SPD		16 msp-3	23260	Elect.	Elect.	$702	$5,243	-$93	$0	$234	$5,384	$4,683
Motors	RI	Lift Station	Effic.-1		1 mlp-15	19456	Elect.	Elect.	$1,139	$1,465	(a)	$0	$796	$2,261	$1,122
Motors	RI	Lift Station	Effic.-1		2 mlp-25	13630	Elect.	Elect.	$1,610	$2,567	(a)	$0	$1,166	$3,733	$2,123
Motors	RI	Lift Station	Effic.-2		1 mlp-15	19456	Elect.	Elect.	$966	$1,195	(a)	$0	$862	$2,056	$1,091
Motors	RI	Lift Station	Effic.-2		2 mlp-25	13630	Elect.	Elect.	$1,424	$2,140	(a)	$0	$1,236	$3,376	$1,952
Motors	RI	fan, exhaust	Effic.-1		1 mef-2	715	Elect.	Elect.	$370	$429	(a)	$0	$49	$479	$109
Motors	RI	air shower	Effic.-1		2 mf-5	715	Elect.	Elect.	$535	$1,346	(a)	$0	$106	$1,452	$917
Motors	RI	fan, supply	Effic.-1		3 mef-1.5	715	Elect.	Elect.	$341	$320	(a)	$0	$54	$374	$33
Motors	RI	fan, exhaust	Effic.-1		4 mef-1.5	715	Elect.	Elect.	$341	$320	(a)	$0	$54	$374	$33
Motors	RI	fan, supply	Effic.-1		5 mef-7.5	715	Elect.	Elect.	$728	$2,246	(a)	$0	$143	$2,389	$1,661

TABLE 4.4. (contd)

ERO Category	RI or ROF	Equipment	Description of ERO	ID	ID2	Facility	Exist. Fuel	Result. Fuel(s)	Present Value of Installed Cost (1992 $)	Present Value of Energy Savings (1992 $)	Present Value of Demand Savings (1992 $)	Present Value of O&M Savings (1992 $)	Present Value of Replace. Savings (1992 $)	Present Value of Total Savings (1992 $)	Net Present Value (1992 $)
Motors	RI	fan, supply	Effic.-1		6 mef-25		715 Elect.	Elect.	$1,610	$8,224	(a)	$0	$355	$8,579	$6,969
Motors	RI	fan, exhaust	Effic.-1		7 mef-1.5		715 Elect.	Elect.	$341	$320	(a)	$0	$54	$374	$33
Motors	RI	fan, exhaust	Effic.-1		8 mef-1.5		715 Elect.	Elect.	$341	$320	(a)	$0	$54	$374	$33
Motors	RI	fan, supply	Effic.-1		9 mef-10		715 Elect.	Elect.	$864	$2,973	(a)	$0	$126	$3,099	$2,235
Motors	RI	fan, exhaust	Effic.-1		10 mef-5		715 Elect.	Elect.	$535	$1,346	(a)	$0	$106	$1,452	$917
Motors	RI	pump, condenser	Effic.-1		11 mcp-15		715 Elect.	Elect.	$1,139	$4,700	(a)	$0	$236	$4,936	$3,797
Motors	RI	fan, exhaust	Effic.-1		12 mef-10		715 Elect.	Elect.	$864	$2,973	(a)	$0	$126	$3,099	$2,235
Motors	RI	pump, chilled water	Effic.-1		13 mcwp-3		715 Elect.	Elect.	$460	-$880	(a)	$0	$97	-$583	-$1,042
Motors	RI	pump, chiller recirc	Effic.-1		14 mcwp-1.5		715 Elect.	Elect.	$341	$320	(a)	$0	$54	$374	$33
Motors	RI	pump, air washer	Effic.-1		15 mf-7.5		715 Elect.	Elect.	$728	$2,246	(a)	$0	$143	$2,389	$1,661
Motors	RI	fan, exhaust	Effic.-1		16 mef-1.5		715 Elect.	Elect.	$341	$320	(a)	$0	$54	$374	$33
Motors	RI	fan, supply	Effic.-1		17 mef-15		715 Elect.	Elect.	$1,139	$4,700	(a)	$0	$236	$4,936	$3,797
Motors	RI	fan, supply	Effic.-1		18 mef-15		715 Elect.	Elect.	$1,139	$4,700	(a)	$0	$236	$4,936	$3,797
Motors	RI	fan, exhaust	Effic.-2		1 mef-2		715 Elect.	Elect.	$432	$357	(a)	$0	$26	$383	-$49
Motors	RI	air shower	Effic.-2		2 mf-5		715 Elect.	Elect.	$457	$1,017	(a)	$0	$135	$1,152	$695
Motors	RI	fan, supply	Effic.-2		3 mef-1.5		715 Elect.	Elect.	$412	$203	(a)	$0	$27	$230	-$182
Motors	RI	fan, exhaust	Effic.-2		4 mef-1.5		715 Elect.	Elect.	$412	$203	(a)	$0	$27	$230	-$182
Motors	RI	fan, supply	Effic.-2		5 mef-7.5		715 Elect.	Elect.	$598	$1,708	(a)	$0	$192	$1,901	$1,303
Motors	RI	fan, supply	Effic.-2		6 mef-25		715 Elect.	Elect.	$1,424	$6,894	(a)	$0	$425	$7,320	$5,896
Motors	RI	fan, exhaust	Effic.-2		7 mef-1.5		715 Elect.	Elect.	$412	$203	(a)	$0	$27	$230	-$182
Motors	RI	fan, exhaust	Effic.-2		8 mef-1.5		715 Elect.	Elect.	$412	$203	(a)	$0	$27	$230	-$182
Motors	RI	fan, supply	Effic.-2		9 mef-10		715 Elect.	Elect.	$738	$2,352	(a)	$0	$174	$2,526	$1,788
Motors	RI	fan, exhaust	Effic.-2		10 mef-5		715 Elect.	Elect.	$457	$1,017	(a)	$0	$135	$1,152	$695
Motors	RI	pump, condenser	Effic.-2		11 mcp-15		715 Elect.	Elect.	$966	$3,859	(a)	$0	$301	$4,160	$3,195
Motors	RI	fan, exhaust	Effic.-2		12 mef-10		715 Elect.	Elect.	$738	$2,352	(a)	$0	$174	$2,526	$1,788
Motors	RI	pump, chilled water	Effic.-2		13 mcwp-3		715 Elect.	Elect.	$340	$536	(a)	$0	$142	$678	$339
Motors	RI	pump, chiller recirc	Effic.-2		14 mcwp-1.5		715 Elect.	Elect.	$412	$203	(a)	$0	$27	$230	-$182
Motors	RI	pump, air washer	Effic.-2		15 mf-7.5		715 Elect.	Elect.	$598	$1,708	(a)	$0	$192	$1,901	$1,303
Motors	RI	fan, exhaust	Effic.-2		16 mef-1.5		715 Elect.	Elect.	$412	$203	(a)	$0	$27	$230	-$182
Motors	RI	fan, supply	Effic.-2		17 mef-15		715 Elect.	Elect.	$966	$3,859	(a)	$0	$301	$4,160	$3,195
Motors	RI	fan, supply	Effic.-2		18 mef-15		715 Elect.	Elect.	$966	$3,859	(a)	$0	$301	$4,160	$3,195
Motors	RI	pump	Effic.-1		1 mp-1.5		717 Elect.	Elect.	$341	$160	(a)	$0	$208	$367	$26
Motors	RI	fan	Effic.-1		2 mf-40		717 Elect.	Elect.	$2,297	$13,558	(a)	$0	$1,391	$14,950	$12,653
Motors	RI	pump	Effic.-1		3 mp-5		717 Elect.	Elect.	$535	$1,346	(a)	$0	$365	$1,711	$1,176
Motors	RI	pump	Effic.-1		4 mp-1.5		717 Elect.	Elect.	$341	$320	(a)	$0	$208	$527	$186
Motors	RI	pump	Effic.-1		5 mp-5		717 Elect.	Elect.	$535	$1,346	(a)	$0	$365	$1,711	$1,176
Motors	RI	fan	Effic.-1		6 mf-40		717 Elect.	Elect.	$2,297	$13,558	(a)	$0	$1,391	$14,950	$12,653
Motors	RI	pump	Effic.-1		7 mp-1.5		717 Elect.	Elect.	$341	$160	(a)	$0	$208	$367	$26
Motors	RI	fan	Effic.-1		8 mf-40		717 Elect.	Elect.	$2,297	$13,558	(a)	$0	$1,391	$14,950	$12,653
Motors	RI	pump	Effic.-1		9 mp-1.5		717 Elect.	Elect.	$341	$320	(a)	$0	$208	$527	$186
Motors	RI	fan	Effic.-1		10 mf-75		717 Elect.	Elect.	$4,396	$13,031	(a)	$0	$1,781	$14,812	$10,416
Motors	RI	fan	Effic.-1		11 mf-75		717 Elect.	Elect.	$4,396	$13,031	(a)	$0	$1,781	$14,812	$10,416
Motors	RI	pump	Effic.-1		12 mp-1		717 Elect.	Elect.	$209	$201	(a)	$0	$226	$427	$118
Motors	RI	pump	Effic.-1		13 mp-1.5		717 Elect.	Elect.	$341	$160	(a)	$0	$208	$367	$26
Motors	RI	pump	Effic.-1		14 mp-1.5		717 Elect.	Elect.	$341	$160	(a)	$0	$208	$367	$26
Motors	RI	pump	Effic.-1		15 mp-1		717 Elect.	Elect.	$309	$201	(a)	$0	$226	$427	$118
Motors	RI	pump	Effic.-1		16 mp-10		717 Elect.	Elect.	$864	$1,487	(a)	$0	$507	$1,994	$1,130
Motors	RI	fan	Effic.-1		17 mf-40		717 Elect.	Elect.	$2,297	$13,558	(a)	$0	$1,391	$14,950	$12,653
Motors	RI	fan	Effic.-1		18 mf-75		717 Elect.	Elect.	$4,396	$13,031	(a)	$0	$1,781	$14,812	$10,416
Motors	RI	pump	Effic.-1		19 mp-10		717 Elect.	Elect.	$864	$1,487	(a)	$0	$507	$1,994	$1,130
Motors	RI	fan	Effic.-1		20 mf-75		717 Elect.	Elect.	$4,396	$13,031	(a)	$0	$1,781	$14,812	$10,416
Motors	RI	pump	Effic.-2		1 mp-1.5		717 Elect.	Elect.	$412	$101	(a)	$0	$181	$282	-$129
Motors	RI	fan	Effic.-2		2 mf-40		717 Elect.	Elect.	$1,971	$11,031	(a)	$0	$1,514	$12,545	$10,574
Motors	RI	pump	Effic.-2		3 mp-5		717 Elect.	Elect.	$457	$1,017	(a)	$0	$394	$1,411	$954
Motors	RI	pump	Effic.-2		4 mp-1.5		717 Elect.	Elect.	$412	$203	(a)	$0	$181	$384	-$28
Motors	RI	pump	Effic.-2		5 mp-5		717 Elect.	Elect.	$457	$1,017	(a)	$0	$394	$1,411	$954
Motors	RI	fan	Effic.-2		6 mf-40		717 Elect.	Elect.	$1,971	$11,031	(a)	$0	$1,514	$12,545	$10,574
Motors	RI	pump	Effic.-2		7 mp-1.5		717 Elect.	Elect.	$412	$101	(a)	$0	$181	$282	-$129
Motors	RI	fan	Effic.-2		8 mf-40		717 Elect.	Elect.	$1,971	$11,031	(a)	$0	$1,514	$12,545	$10,574
Motors	RI	pump	Effic.-2		9 mp-1.5		717 Elect.	Elect.	$412	$203	(a)	$0	$181	$384	-$28
Motors	RI	fan	Effic.-2		10 mf-75		717 Elect.	Elect.	$2,676	$11,827	(a)	$0	$2,427	$14,254	$11,579

TABLE 4.4. (contd)

ERO Category	RI or ROF	Equipment	Description of ERO	ID	ID2	Facility	Exist. Fuel	Result. Fuel(s)	Present Value of Installed Cost (1992 $)	Present Value of Energy Savings (1992 $)	Present Value of Demand Savings (1992 $)	Present Value of O&M Savings (1992 $)	Present Value of Replace. Savings (1992 $)	Present Value of Total Savings (1992 $)	Net Present Value (1992 $)
Motors	RI	fan	Effic.-2		11 mf-75		717 Elect.	Elect.	$2,676	$11,827	(a)	$0	$2,427	$14,254	$11,579
Motors	RI	pump	Effic.-2		12 mp-1		717 Elect.	Elect.	$279	$105	(a)	$0	$237	$342	$64
Motors	RI	pump	Effic.-2		13 mp-1.5		717 Elect.	Elect.	$412	$101	(a)	$0	$181	$282	-$129
Motors	RI	pump	Effic.-2		14 mp-1.5		717 Elect.	Elect.	$412	$101	(a)	$0	$181	$282	-$129
Motors	RI	pump	Effic.-2		15 mp-1		717 Elect.	Elect.	$279	$105	(a)	$0	$237	$342	$64
Motors	RI	pump	Effic.-2		16 mp-10		717 Elect.	Elect.	$738	$1,176	(a)	$0	$555	$1,731	$993
Motors	RI	fan	Effic.-2		17 mf-40		717 Elect.	Elect.	$1,971	$11,031	(a)	$0	$1,514	$12,545	$10,574
Motors	RI	fan	Effic.-2		18 mf-75		717 Elect.	Elect.	$2,676	$11,827	(a)	$0	$2,427	$14,254	$11,579
Motors	RI	pump	Effic.-2		19 mp-10		717 Elect.	Elect.	$738	$1,176	(a)	$0	$555	$1,731	$993
Motors	RI	fan	Effic.-2		20 mf-75		717 Elect.	Elect.	$2,676	$11,827	(a)	$0	$2,427	$14,254	$11,579
Motors	RI	fan, exhaust	Effic.-1		1 mef-60		719 Elect.	Elect.	$3,182	$20,791	(a)	$0	$182	$20,972	$17,790
Motors	RI	pump, chilled water circ	Effic.-1		2 mcwp-75		719 Elect.	Elect.	$4,396	$13,031	(a)	$0	-$249	$12,782	$8,387
Motors	RI	pump, chilled water circ	Effic.-1		3 mcwp-10		719 Elect.	Elect.	$864	$1,189	(a)	$0	$15	$1,205	$340
Motors	RI	pump, chilled water circ	Effic.-1		4 mcwp-10		719 Elect.	Elect.	$864	$1,189	(a)	$0	$15	$1,205	$340
Motors	RI	pump, hot water	Effic.-1		5 mhwp-15		719 Elect.	Elect.	$1,139	$2,350	(a)	$0	$72	$2,422	$1,283
Motors	RI	pump, chilled water circ	Effic.-1		6 mcwp-75		719 Elect.	Elect.	$4,396	$13,031	(a)	$0	-$249	$12,782	$8,387
Motors	RI	pump, hot water	Effic.-1		7 mhwp-15		719 Elect.	Elect.	$1,139	$2,350	(a)	$0	$72	$2,422	$1,283
Motors	RI	pump, chilled water circ	Effic.-1		8 mcwp-10		719 Elect.	Elect.	$864	$1,189	(a)	$0	$15	$1,205	$340
Motors	RI	pump, chilled water circ	Effic.-1		9 mcwp-10		719 Elect.	Elect.	$864	$1,189	(a)	$0	$15	$1,205	$340
Motors	RI	fan, supply	Effic.-1		10 mef-300		719 Elect.	Elect.	$13,501	$52,124	(a)	$0	$973	$53,097	$39,596
Motors	RI	fan, booster	Effic.-1		11 mbf-300		719 Elect.	Elect.	$13,501	$52,124	(a)	$0	$973	$53,097	$39,596
Motors	RI	fan, booster	Effic.-1		12 mbf-300		719 Elect.	Elect.	$13,501	$52,124	(a)	$0	$973	$53,097	$39,596
Motors	RI	pump, chilled water circ	Effic.-1		13 mpcw-10		719 Elect.	Elect.	$864	$1,189	(a)	$0	$15	$1,205	$340
Motors	RI	fan, exhaust	Effic.-2		1 mef-60		719 Elect.	Elect.	$2,775	$17,838	(a)	$0	$335	$18,173	$15,398
Motors	RI	pump, chilled water circ	Effic.-2		2 mcwp-75		719 Elect.	Elect.	$2,676	$11,827	(a)	$0	$398	$12,225	$9,549
Motors	RI	pump, chilled water circ	Effic.-2		3 mcwp-10		719 Elect.	Elect.	$738	$941	(a)	$0	$63	$1,004	$266
Motors	RI	pump, chilled water circ	Effic.-2		4 mcwp-10		719 Elect.	Elect.	$738	$941	(a)	$0	$63	$1,004	$266
Motors	RI	pump, hot water	Effic.-2		5 mhwp-15		719 Elect.	Elect.	$966	$1,930	(a)	$0	$138	$2,067	$1,101
Motors	RI	pump, chilled water circ	Effic.-2		6 mcwp-75		719 Elect.	Elect.	$2,676	$11,827	(a)	$0	$398	$12,225	$9,549
Motors	RI	pump, hot water	Effic.-2		7 mhwp-15		719 Elect.	Elect.	$966	$1,930	(a)	$0	$138	$2,067	$1,101
Motors	RI	pump, chilled water circ	Effic.-2		8 mcwp-10		719 Elect.	Elect.	$738	$941	(a)	$0	$63	$1,004	$266
Motors	RI	pump, chilled water circ	Effic.-2		9 mcwp-10		719 Elect.	Elect.	$738	$941	(a)	$0	$63	$1,004	$266
Motors	RI	fan, supply	Effic.-2		10 mef-300		719 Elect.	Elect.	$11,822	$49,881	(a)	$0	$1,604	$51,485	$39,663
Motors	RI	fan, booster	Effic.-2		11 mbf-300		719 Elect.	Elect.	$11,822	$49,881	(a)	$0	$1,604	$51,485	$39,663
Motors	RI	fan, booster	Effic.-2		12 mbf-300		719 Elect.	Elect.	$11,822	$49,881	(a)	$0	$1,604	$51,485	$39,663
Motors	RI	pump, chilled water circ	Effic.-2		13 mpcw-10		719 Elect.	Elect.	$738	$941	(a)	$0	$63	$1,004	$266
Motors	RI	heat exchanger and pump	Effic.-1		1 mp-1.5		730 Elect.	Elect.	$341	$1,075	(a)	$0	$208	$1,283	$942
Motors	RI	fan, rack supply	Effic.-1		2 mf-5		730 Elect.	Elect.	$535	$2,355	(a)	$0	$365	$2,720	$2,186
Motors	RI	fan, supply, tunnel	Effic.-1		3 mef-50		730 Elect.	Elect.	$2,696	$69,068	$9,636	$0	$1,923	$80,627	$77,931
Motors	RI	fan, vehicle recorder rm	Effic.-1		4 mf-5		730 Elect.	Elect.	$535	$4,527	(a)	$0	$365	$4,893	$4,358
Motors	RI	fan, exhaust	Effic.-1		5 mef-15		730 Elect.	Elect.	$1,139	$15,810	(a)	$0	$796	$16,606	$15,467
Motors	RI	pump, chilled water	Effic.-1		6 mcwp-15		730 Elect.	Elect.	$1,139	$15,810	(a)	$0	$796	$16,606	$15,467
Motors	RI	fan, control rm 101	Effic.-1		7 mf-2		730 Elect.	Elect.	$370	$1,445	(a)	$0	$208	$1,653	$1,283
Motors	RI	pump, air wash	Effic.-1		8 mp-15		730 Elect.	Elect.	$1,139	$15,810	(a)	$0	$796	$16,606	$15,467
Motors	RI	fan, control rm 103	Effic.-1		9 mf-5		730 Elect.	Elect.	$535	$4,527	(a)	$0	$365	$4,893	$4,358
Motors	RI	heat exchanger and pump	Effic.-1		10 mp-1.5		730 Elect.	Elect.	$341	$1,075	(a)	$0	$208	$1,283	$942
Motors	RI	fan, control rm 102	Effic.-1		11 mf-2		730 Elect.	Elect.	$370	$1,445	(a)	$0	$208	$1,653	$1,283
Motors	RI	fan, supply tunnel 3	Effic.-1		12 mf-10		730 Elect.	Elect.	$864	$12,057	$1,682	$0	$507	$14,247	$13,382
Motors	RI	pump, evaporative condenser	Effic.-1		13 mcp-1.5		730 Elect.	Elect.	$341	$1,075	(a)	$0	$208	$1,283	$942
Motors	RI	fan, launch control racks	Effic.-1		14 mf-5		730 Elect.	Elect.	$535	$2,355	(a)	$0	$365	$2,720	$2,186
Motors	RI	fan, supply	Effic.-1		15 mef-3		730 Elect.	Elect.	$460	-$2,287	(a)	$0	$325	-$1,962	-$2,422
Motors	RI	fan, evaporative condenser	Effic.-1		16 mcf-10		730 Elect.	Elect.	$864	$10,001	(a)	$0	$507	$10,508	$9,644
Motors	RI	fan, launch control rm	Effic.-1		17 mf-7.5		730 Elect.	Elect.	$728	$7,554	(a)	$0	$496	$8,049	$7,321
Motors	RI	fan, booster landlines rm	Effic.-1		18 mbf-5		730 Elect.	Elect.	$535	$4,527	(a)	$0	$365	$4,893	$4,358
Motors	RI	heat exchanger and pump	Effic.-2		1 mp-1.5		730 Elect.	Elect.	$412	$683	(a)	$0	$181	$864	$452
Motors	RI	fan, rack supply	Effic.-2		2 mf-5		730 Elect.	Elect.	$457	$1,780	(a)	$0	$394	$2,174	$1,717
Motors	RI	fan, supply, tunnel	Effic.-2		3 mef-50		730 Elect.	Elect.	$2,176	$59,136	$8,250	$0	$2,119	$69,505	$67,329
Motors	RI	fan, vehicle recorder rm	Effic.-2		4 mf-5		730 Elect.	Elect.	$457	$3,422	(a)	$0	$394	$3,816	$3,359
Motors	RI	fan, exhaust	Effic.-2		5 mef-15		730 Elect.	Elect.	$966	$12,982	(a)	$0	$862	$13,844	$12,878
Motors	RI	pump, chilled water	Effic.-2		6 mcwp-15		730 Elect.	Elect.	$966	$12,982	(a)	$0	$862	$13,844	$12,878
Motors	RI	fan, control rm 101	Effic.-2		7 mf-2		730 Elect.	Elect.	$432	$1,202	(a)	$0	$185	$1,387	$955

TABLE 4.4. (contd)

ERO Category	RI or ROF	Equipment	Description of ERO	ID	ID2	Facility	Exist. Fuel	Result. Fuel(s)	Present Value of Installed Cost (1992 $)	Present Value of Energy Savings (1992 $)	Present Value of Demand Savings (1992 $)	Present Value of O&M Savings (1992 $)	Present Value of Replace. Savings (1992 $)	Present Value of Total Savings (1992 $)	Net Present Value (1992 $)
Motors	RI	pump, air wash	Effic.-2		8 mp-15		730 Elect.	Elect.	$966	$12,982	(a)	$0	$862	$13,844	$12,878
Motors	RI	fan, control rm 103	Effic.-2		9 mf-5		730 Elect.	Elect.	$457	$3,422	(a)	$0	$394	$3,816	$3,359
Motors	RI	heat exchanger and pump	Effic.-2		10 mp-1.5		730 Elect.	Elect.	$412	$683	(a)	$0	$181	$864	$452
Motors	RI	fan, control rm 102	Effic.-2		11 mf-2		730 Elect.	Elect.	$432	$1,202	(a)	$0	$185	$1,387	$955
Motors	RI	fan, supply tunnel 3	Effic.-2		12 mf-10		730 Elect.	Elect.	$738	$9,538	$1,331	$0	$555	$11,423	$10,686
Motors	RI	pump, evaporative condenser	Effic.-2		13 mcp-1.5		730 Elect.	Elect.	$412	$683	(a)	$0	$181	$864	$452
Motors	RI	fan, launch control racks	Effic.-2		14 mf-5		730 Elect.	Elect.	$457	$1,790	(a)	$0	$394	$2,174	$1,717
Motors	RI	fan, supply	Effic.-2		15 msf-3		730 Elect.	Elect.	$340	$1,803	(a)	$0	$370	$2,173	$1,834
Motors	RI	fan, evaporative condenser	Effic.-2		16 mcf-10		730 Elect.	Elect.	$738	$7,911	(a)	$0	$555	$8,466	$7,728
Motors	RI	fan, launch control rm	Effic.-2		17 mf-7.5		730 Elect.	Elect.	$598	$5,747	(a)	$0	$544	$6,291	$5,693
Motors	RI	fan, booster landlines rm	Effic.-2		18 mbf-5		730 Elect.	Elect.	$457	$3,422	(a)	$0	$394	$3,816	$3,359
Motors	RI	fan	Effic.-1		1 mf-40		734 Elect.	Elect.	$2,297	$10,169	(a)	$0	$1,391	$11,560	$9,263
Motors	RI	pump	Effic.-1		2 mp-5		734 Elect.	Elect.	$535	$1,009	(a)	$0	$365	$1,374	$840
Motors	RI	fan	Effic.-1		3 mf-40		734 Elect.	Elect.	$2,297	$10,169	(a)	$0	$1,391	$11,560	$9,263
Motors	RI	fan	Effic.-1		4 mf-40		734 Elect.	Elect.	$2,297	$10,169	(a)	$0	$1,391	$11,560	$9,263
Motors	RI	pump	Effic.-1		5 mp-5		734 Elect.	Elect.	$535	$1,009	(a)	$0	$365	$1,374	$840
Motors	RI	fan	Effic.-1		6 mf-40		734 Elect.	Elect.	$2,297	$10,169	(a)	$0	$1,391	$11,560	$9,263
Motors	RI	fan	Effic.-2		1 mf-40		734 Elect.	Elect.	$1,971	$8,273	(a)	$0	$1,514	$9,787	$7,816
Motors	RI	pump	Effic.-2		2 mp-5		734 Elect.	Elect.	$457	$763	(a)	$0	$394	$1,157	$700
Motors	RI	fan	Effic.-2		3 mf-40		734 Elect.	Elect.	$1,971	$8,273	(a)	$0	$1,514	$9,787	$7,816
Motors	RI	fan	Effic.-2		4 mf-40		734 Elect.	Elect.	$1,971	$8,273	(a)	$0	$1,514	$9,787	$7,816
Motors	RI	pump	Effic.-2		5 mp-5		734 Elect.	Elect.	$457	$763	(a)	$0	$394	$1,157	$700
Motors	RI	fan	Effic.-2		6 mf-40		734 Elect.	Elect.	$1,971	$8,273	(a)	$0	$1,514	$9,787	$7,816
Motors	RI	fan, supply	Effic.-1		1 msf-15		738 Elect.	Elect.	$1,139	$3,525	(a)	$0	$796	$4,321	$3,182
Motors	RI	fan, evaporative condenser	Effic.-1		2 mcf-10		738 Elect.	Elect.	$864	$2,230	(a)	$0	$507	$2,737	$1,873
Motors	RI	fan, supply	Effic.-1		3 msf-25		738 Elect.	Elect.	$1,610	$6,168	(a)	$0	$1,166	$7,334	$5,724
Motors	RI	fan, exhaust	Effic.-1		4 msf-2		738 Elect.	Elect.	$370	$322	(a)	$0	$208	$530	$160
Motors	RI	fan, exhaust	Effic.-1		5 msf-1.5		738 Elect.	Elect.	$341	$240	(a)	$0	$208	$447	$106
Motors	RI	fan, exhaust	Effic.-1		6 msf-5		738 Elect.	Elect.	$535	$1,009	(a)	$0	$365	$1,374	$840
Motors	RI	fan, exhaust	Effic.-1		7 msf-1.5		738 Elect.	Elect.	$341	$240	(a)	$0	$209	$447	$106
Motors	RI	fan, exhaust	Effic.-1		8 msf-10		738 Elect.	Elect.	$864	$2,230	(a)	$0	$507	$2,737	$1,873
Motors	RI	fan, supply	Effic.-1		9 msf-10		738 Elect.	Elect.	$864	$2,230	(a)	$0	$507	$2,737	$1,873
Motors	RI	fan, supply	Effic.-1		10 msf-1.5		738 Elect.	Elect.	$341	$240	(a)	$0	$208	$447	$106
Motors	RI	fan, exhaust	Effic.-1		11 msf-7.5		738 Elect.	Elect.	$728	$1,684	(a)	$0	$496	$2,180	$1,452
Motors	RI	fan, supply	Effic.-2		1 msf-15		738 Elect.	Elect.	$966	$2,894	(a)	$0	$862	$3,756	$2,790
Motors	RI	fan, supply	Effic.-2		2 mcf-10		738 Elect.	Elect.	$738	$1,764	(a)	$0	$555	$2,319	$1,581
Motors	RI	fan, evaporative condenser	Effic.-2		3 msf-25		738 Elect.	Elect.	$1,424	$5,171	(a)	$0	$1,236	$6,407	$4,983
Motors	RI	fan, supply	Effic.-2		4 msf-2		738 Elect.	Elect.	$432	$268	(a)	$0	$185	$453	$21
Motors	RI	fan, exhaust	Effic.-2		5 msf-1.5		738 Elect.	Elect.	$412	$152	(a)	$0	$181	$333	-$79
Motors	RI	fan, exhaust	Effic.-2		6 msf-5		738 Elect.	Elect.	$457	$763	(a)	$0	$394	$1,157	$700
Motors	RI	fan, exhaust	Effic.-2		7 msf-1.5		738 Elect.	Elect.	$412	$152	(a)	$0	$181	$333	-$79
Motors	RI	fan, exhaust	Effic.-2		8 msf-10		738 Elect.	Elect.	$738	$1,764	(a)	$0	$555	$2,319	$1,581
Motors	RI	fan, supply	Effic.-2		9 msf-10		738 Elect.	Elect.	$738	$1,764	(a)	$0	$555	$2,319	$1,581
Motors	RI	fan, supply	Effic.-2		10 msf-1.5		738 Elect.	Elect.	$412	$152	(a)	$0	$181	$333	-$79
Motors	RI	fan, exhaust	Effic.-2		11 msf-7.5		738 Elect.	Elect.	$598	$1,281	(a)	$0	$544	$1,826	$1,228
Motors	RI	fan, supply	Effic.-1		1 mhwp-1		945 Elect.	Elect.	$309	$817	$114	$0	$161	$1,091	$782
Motors	RI	pump, hot water circ	Effic.-1		2 mp-1.5		945 Elect.	Elect.	$341	$1,297	$181	$0	$143	$1,621	$1,280
Motors	RI	pump	Effic.-1		3 msf-2		945 Elect.	Elect.	$370	$1,672	(a)	$0	$142	$1,814	$1,444
Motors	RI	air handler	Effic.-1		4 msf-20		945 Elect.	Elect.	$1,439	$10,754	(a)	$0	$711	$11,464	$10,026
Motors	RI	air handler	Effic.-2		1 mhwp-1		945 Elect.	Elect.	$279	$426	$59	$0	$172	$657	$378
Motors	RI	pump, hot water circ	Effic.-2		2 mp-1.5		945 Elect.	Elect.	$412	$823	$115	$0	$117	$1,055	$643
Motors	RI	pump	Effic.-2		3 msf-2		945 Elect.	Elect.	$432	$1,391	(a)	$0	$118	$1,510	$1,078
Motors	RI	air handler	Effic.-2		4 msf-20		945 Elect.	Elect.	$1,256	$9,256	(a)	$0	$780	$10,035	$8,780
Motors	RI	air handler	Effic.-1		1 mcp-25		8401 Elect.	Elect.	$1,610	$13,753	(a)	$0	$1,166	$14,919	$13,309
Motors	RI	condenser pump	Effic.-1		2 msf-7.5		8401 Elect.	Elect.	$728	$9,107	$1,271	$0	$496	$10,873	$10,145
Motors	RI	fan, exhaust	Effic.-1		3 msf-5		8401 Elect.	Elect.	$535	$5,458	$761	$0	$365	$6,585	$6,050
Motors	RI	fan, exhaust	Effic.-1		4 mf-20		8401 Elect.	Elect.	$1,439	$10,754	(a)	$0	$1,007	$11,760	$10,321
Motors	RI	fan	Effic.-1		5 mcp-40		8401 Elect.	Elect.	$2,297	$22,673	(a)	$0	$1,391	$24,064	$21,767
Motors	RI	condenser pump	Effic.-1		6 msf-15		8401 Elect.	Elect.	$1,139	$19,061	$2,659	$0	$796	$22,516	$21,377
Motors	RI	fan, exhaust	Effic.-1		7 mcwp-10		8401 Elect.	Elect.	$864	$4,972	(a)	$0	$507	$5,479	$4,615
Motors	RI	pump, water circ	Effic.-1		8 mctf-3		8401 Elect.	Elect.	$460	-$1,137	(a)	$0	$325	-$812	-$1,272
Motors	RI	fan, cooling tower													

TABLE 4.4. (contd)

ERO Category	RI or ROF	Equipment	Description of ERO	ID	ID2	Facility	Exist. Fuel	Result. Fuel(s)	Present Value of Installed Cost (1992 $)	Present Value of Energy Savings (1992 $)	Present Value of Demand Savings (1992 $)	Present Value of O&M Savings (1992 $)	Present Value of Replace. Savings (1992 $)	Present Value of Total Savings (1992 $)	Net Present Value (1992 $)
Motors	RI	fan	Effic.-1		9 mf-20	8401	Elect.	Elect.	$1,439	$10,754	(a)	$0	$1,007	$11,760	$10,321
Motors	RI	pump, cooling tower	Effic.-1		10 mct-15	8401	Elect.	Elect.	$1,139	$7,859	(a)	$0	$798	$8,656	$7,517
Motors	RI	fan, exhaust	Effic.-1		11 mef-1	8401	Elect.	Elect.	$309	$337	(a)	$0	$226	$563	$254
Motors	RI	condenser pump	Effic.-2		1 mcp-25	8401	Elect.	Elect.	$1,424	$11,529	(a)	$0	$1,236	$12,765	$11,342
Motors	RI	fan, exhaust	Effic.-2		2 mef-7.5	8401	Elect.	Elect.	$598	$6,928	$967	$0	$544	$8,439	$7,841
Motors	RI	fan, exhaust	Effic.-2		3 mef-5	8401	Elect.	Elect.	$457	$4,126	$576	$0	$394	$5,095	$4,638
Motors	RI	fan	Effic.-2		4 mf-20	8401	Elect.	Elect.	$1,256	$9,256	(a)	$0	$1,075	$10,331	$9,075
Motors	RI	condenser pump	Effic.-2		5 mcp-40	8401	Elect.	Elect.	$1,971	$18,446	(a)	$0	$1,514	$19,960	$17,989
Motors	RI	fan, exhaust	Effic.-2		6 mef-15	8401	Elect.	Elect.	$966	$15,652	$2,184	$0	$882	$18,697	$17,731
Motors	RI	pump, water circ	Effic.-2		7 mcwp-10	8401	Elect.	Elect.	$738	$3,933	(a)	$0	$555	$4,488	$3,750
Motors	RI	fan, cooling tower	Effic.-2		8 mctf-3	8401	Elect.	Elect.	$340	$896	(a)	$0	$370	$1,266	$927
Motors	RI	fan	Effic.-2		9 mf-20	8401	Elect.	Elect.	$1,256	$9,256	(a)	$0	$1,075	$10,331	$9,075
Motors	RI	pump, cooling tower	Effic.-2		10 mct-15	8401	Elect.	Elect.	$966	$6,454	(a)	$0	$862	$7,315	$6,349
Motors	RI	fan, exhaust	Effic.-2		11 mef-1	8401	Elect.	Elect.	$279	$175	(a)	$0	$237	$413	$134
Process	RI	Hydrazine Incinerators	Bubble Cap Scrubbers			SLC-4			$844,400	$167,903	(a)	$648,713	$97,189	$913,805	$69,405
Process	RI	Oxidizer Burner	Oxidizer Scrubber		1 1st Stage	SLC-4W			$353,000	$22,042	(a)	-$368,387	-$69,193	-$415,538	-$768,538
Process	RI	Oxidizer Burner	Oxidizer Scrubber		2 Both Stages	SLC-4W			$473,000	$22,042	(a)	-$463,786	-$106,795	-$548,539	-$1,021,539
Process	RI	Oxidizer Burner	Oxidizer Scrubber		3 Both & Trtmt	SLC-4W			$473,000	$22,042	(a)	-$331,695	-$106,795	-$416,448	-$889,448
Process	RI	Nitrogen Dist. System	Improve Efficiency		1	SLC-4			$148,500	$991,712	$0	-$726,500	$0	$265,212	$116,712
Process	RI	Nitrogen Dist. System	Imp.Effic.&Comp.Air		2	SLC-4			$934,500	$2,326,344	-$53,383	-$785,207	$0	$1,477,754	$543,254
Process	RI	Nitrogen Dist. System	Comp. Air		3	SLC-4			$786,000	$1,532,975	-$63,383	-$58,707	$0	$1,410,885	$624,884
Process	RI	NG Steam Boilers	Pneumatic Humidifiers		1	SLC-4E			$125,000	$57,279	(a)	$314,083	$27,830	$398,992	$273,992
Process	RI	Electric Steam Boilers	Pneum. Humid.		1	SLC-4E			$30,000	$449,307	(a)	$46,966	$102,071	$598,344	$568,343
Process	RI	Electric Steam Boilers	Pneum. Humid. w/ Bypass		2	SLC-4E			$100,400	$550,307	(a)	$46,966	$93,730	$691,003	$590,602
Process	RI	Electric Steam Boilers	Bypass		3	SLC-4E			$70,400	$480,578	(a)	$0	-$8,340	$472,238	$401,837
Space Heating	RI	Boiler	Economizer		1a > 3MBtu/hr		NG	NG	$124,616	$235,420	$0	$0	$23,802	$259,222	$134,606
Space Heating	RI	Boiler	Economizer		1b > 3MBtu/hr		Propane	Propane	$19,393	$38,216	$0	$0	$3,704	$41,920	$22,527
Space Heating	RI	Boiler	Tuneup		2a all sizes		NG	NG	$0	$195,081	$0	-$543,040	$0	-$347,959	-$347,959
Space Heating	RI	Boiler	Tuneup		2b all sizes		Propane	Propane	$0	$29,726	$0	-$73,384	$0	-$43,658	-$43,658
Space Heating	RI	Boiler	Dampers		3a all sizes		NG	NG	$22,090	$559,983	$0	$0	$4,219	$564,203	$542,113
Space Heating	RI	Boiler	Dampers		3b all sizes		Propane	Propane	$3,112	$85,006	$0	$0	$594	$85,600	$82,489
Space Heating	RI	Boiler	New Boiler		4a > 1MBtu/hr		NG	NG	$1,058,185	$917,573	$0	$0	$202,113	$1,119,686	$61,501
Space Heating	RI	Boiler	New Boiler		4b > 1MBtu/hr		Propane	Propane	$144,502	$135,189	$0	$0	$27,600	$162,789	$18,288
Space Heating	RI	Boiler	Pulse Boiler		5a < 1MBtu/hr		NG	NG	$742,523	$265,177	$0	$0	$141,821	$406,999	-$335,524
Space Heating	RI	Boiler	Pulse Boiler		5b < 1MBtu/hr		Propane	Propane	$109,691	$38,775	$0	$0	$20,951	$59,726	-$49,965
Space Heating	RI	Boiler	Blowdown		6a > 6MBtu/hr		NG	NG	$39,900	$78,159	$0	$0	$7,621	$85,780	$45,880
Space Heating	RI	Boiler	Blowdown		6b > 6MBtu/hr		Propane	Propane	$15,840	$30,573	$0	$0	$3,025	$33,598	$17,758
Space Heating	RI	Furnace	New Furnace		7a (76% eff.)	HSG-FAM	NG	NG	$1,133,037	$445,227	$0	$0	$441,232	$886,459	-$246,578
Space Heating	RI	Furnace	Pulse Furnace		8a (93% eff.)	HSG-FAM	NG	NG	$3,136,635	$985,860	$0	$0	$1,221,481	$2,207,341	-$929,294
Space Heating	RI	Insulation	Attic Insulation		1a	HSG-FAM	NG	NG	$1,442,402	$1,491,827	$0	$0	$275,498	$1,767,324	$324,922
Space Heating	RI	Insulation	Insulate Walls		2a	HSG-FAM	NG	NG	$2,867,174	$785,853	$0	$0	$547,628	$1,333,481	-$1,533,693
Space Heating	RI	Weatherization	Weatherization Pkg.		3a	HSG-FAM	NG	NG	$78,433	$339,640	$0	$0	$0	$339,640	$261,207
Water Heating	RI	Water Heater	New 76% eff. WH		1a Residential	HSG-FAM	NG	NG	$516,510	$13,795	$0	$0	$229,340	$243,136	-$273,374
Water Heating	RI	Water Heater	New 80% eff. WH		2a Residential	HSG-FAM	NG	NG	$667,637	$68,977	$0	$0	$296,444	$365,420	-$302,217
Water Heating	RI	Water Heater	New 85% eff. WH		3a Residential	HSG-FAM	NG	NG	$703,984	$137,954	$0	$0	$312,582	$450,536	-$253,448
Water Heating	RI	Water Heater	New 94% eff. WH		4a Residential	HSG-FAM	NG	NG	$2,295,600	$262,112	$0	$0	$1,019,290	$1,281,402	-$1,014,198
Water Heating	RI	Water Heater	New 80% eff. WH		5a Commercial	ADMIN;R/D	NG	NG	$324,577	$101,654	$0	$0	$144,118	$245,772	-$78,805
Water Heating	RI	Water Heater	R-11 Tank Wrap		6a Residential	HSG-FAM	NG	NG	$120,499	$497,954	$0	$0	-$157,611	$340,343	$219,844
Water Heating	ROF	Water Heater	R-11 Tank Wrap		6b Residential	HSG-FAM	NG	NG	$92,001	$377,707	$0	$0	-$61,377	$316,329	$224,328
Water Heating	RI	Water Heater	R-11 Tank Wrap		7a Commercial	ADMIN;R/D	NG	NG	$15,156	$62,616	$0	$0	-$19,824	$42,792	$27,636
Water Heating	ROF	Water Heater	R-11 Tank Wrap		7b Commercial	ADMIN;R/D	NG	NG	$11,572	$47,495	$0	$0	-$7,720	$39,775	$28,204
Water Heating	RI	Water Heater	Low Flow SH		8a Residential	HSG-FAM	NG	NG	$38,260	$294,017	$0	$0	-$33,055	$260,962	$222,702
Trans. & Dist.	RI	< = 1000 KVA Transformers	Impvd Si Steel Core				Elect.	Elect.	$6,837,587	$697,516	$92,367	$0	$2,410,666	$3,200,550	-$3,637,037
Trans. & Dist.	RI	> 1000 KVA Transformers	Impvd Si Steel Core				Elect.	Elect.	$2,378,256	$434,375	$57,521	$0	$795,869	$1,287,765	-$1,090,491
Trans. & Dist.	RI	< = 1000 KVA Transformers	Amorphous Core				Elect.	Elect.	$6,837,587	$1,953,045	$258,629	$0	$2,410,666	$4,622,340	-$2,215,247
Trans. & Dist.	RI	> 1000 KVA Transformers	Amorphous Core				Elect.	Elect.	$2,378,256	$0	$0	$0	$795,869	$795,869	-$1,582,387
Trans. & Dist.	RI	< = 1000 KVA Transformers	Impvd Si Core + Winding				Elect.	Elect.	$7,236,607	$791,314	$118,435	$0	$2,259,518	$3,169,266	-$4,067,341
Trans. & Dist.	RI	> 1000 KVA Transformers	Impvd Si Core + Winding				Elect.	Elect.	$2,542,775	$555,757	$89,392	$0	$733,549	$1,378,698	-$1,164,077
Trans. & Dist.	RI	< = 1000 KVA Transformers	Amph + Impvd Winding				Elect.	Elect.	$8,034,647	$2,046,843	$284,696	$0	$1,957,220	$4,288,759	-$3,745,889
Trans. & Dist.	RI	> 1000 KVA Transformers	Amph + Impvd Winding				Elect.	Elect.	$2,871,813	$121,383	$31,870	$0	$608,909	$762,162	-$2,109,651
Trans. & Dist.	ROF	< = 1000 KVA Transformers	Impvd Si Steel Core				Elect.	Elect.	$4,991,438	$430,967	$57,070	$0	$4,330,661	$4,818,698	-$172,741

TABLE 4.4. (contd)

ERO Category	RI or ROF	Equipment	Description of ERO	ID	ID2	Facility	Exist. Fuel	Result. Fuel(s)	Present Value of Installed Cost (1992 $)	Present Value of Energy Savings (1992 $)	Present Value of Demand Savings (1992 $)	Present Value of O&M Savings (1992 $)	Present Value of Replace. Savings (1992 $)	Present Value of Total Savings (1992 $)	Net Present Value (1992 $)
Trans. & Dist.	ROF	> 1000 KVA Transformers	Impvd Si Steel Core				Elect.	Elect.	$1,736,127	$268,383	$35,540	$0	$1,463,683	$1,767,606	$31,479
Trans. & Dist.	ROF	< = 1000 KVA Transformers	Amorphous Core				Elect.	Elect.	$4,991,438	$1,206,707	$159,798	$0	$4,330,661	$5,697,164	$705,726
Trans. & Dist.	ROF	> 1000 KVA Transformers	Amorphous Core				Elect.	Elect.	$1,736,127	$0	$0	$0	$1,463,683	$1,463,683	-$272,444
Trans. & Dist.	ROF	< = 1000 KVA Transformers	Impvd Si Core + Winding				Elect.	Elect.	$5,282,723	$488,921	$73,176	$0	$4,291,557	$4,853,654	-$429,069
Trans. & Dist.	ROF	> 1000 KVA Transformers	Impvd Si Core + Winding				Elect.	Elect.	$1,856,226	$343,380	$55,231	$0	$1,447,580	$1,846,172	-$10,054
Trans. & Dist.	ROF	< = 1000 KVA Transformers	Amph + Impvd Winding				Elect.	Elect.	$5,865,292	$1,264,661	$175,902	$0	$4,213,349	$5,653,912	-$211,380
Trans. & Dist.	ROF	> 1000 KVA Transformers	Amph + Impvd Winding				Elect.	Elect.	$2,096,423	$74,997	$19,691	$0	$1,415,314	$1,510,003	-$586,420
Transportation	ROF	School, 28-29 pegr, 4x2	CNG Vehicle	B121	conversion	Bus Dies.	NG,Dies.		$6,280	-$748	$0	$34,342	-$1,233	$32,360	$26,080
Transportation	ROF	School, 42-45 pegr, 4x2	CNG Vehicle	B130	conversion	Bus Dies.	NG,Dies.		$29,777	-$4,505	$0	$73,253	-$8,400	$60,348	$30,572
Transportation	ROF	Intercity, 41-51 pegr, 4x2	CNG Vehicle	B139	conversion	Bus Dies.	NG,Dies.		$5,243	-$169	$0	$11,383	-$2,082	$9,133	$3,890
Transportation	ROF	Multistop, 4x2, 8,499 GVW & under	CNG Vehicle	B176	conversion	Truck Dies.	NG,Dies.		$10,968	-$192	$0	$406	-$13,592	-$13,378	-$24,346
Transportation	ROF	Multistop, 4x2, 1-ton	CNG Vehicle	B180	conversion	Truck Dies.	NG,Dies.		$32,579	-$3,355	$0	$103,465	-$36,788	$63,342	$30,763
Transportation	ROF	Carryall, 4x2, Conv, 9 pegr	CNG Vehicle	B191	conversion	Truck Dies.	NG,Dies.		$15,328	-$3,268	$0	$84,927	-$14,450	$67,210	$51,881
Transportation	ROF	Compact, 4x4, 4,600-5,799 GVW	CNG Vehicle	B211	conversion	Pickup Dies.	NG,Dies.		$16,771	-$28,194	$0	$45,207	-$17,935	-$921	-$17,692
Transportation	ROF	Stake, 4x2, 12,500-16,999 GVW, 1-1/2 ton	CNG Vehicle	B264	conversion	Truck Dies.	NG,Dies.		$30,073	-$4,289	$0	$27,537	-$27,910	-$4,662	-$34,735
Transportation	ROF	Tractor, 4x2, 24,000-44,500 GVW	CNG Vehicle	B353	conversion	Truck Dies.	NG,Dies.		$32,903	-$140	$0	$53,523	-$33,844	$19,539	-$13,364
Transportation	ROF	Tractor, 6x4, 24,000-44,500 GVW	CNG Vehicle	B361	conversion	Truck Dies.	NG,Dies.		$46,613	-$1,024	$0	$443,655	-$47,946	$394,685	$348,072
Transportation	ROF	4,000#, PT	CNG Vehicle	E818	conversion	Forklift Dies.	NG,Dies.		$13,107	-$57	$0	$14,764	-$10,687	$4,019	-$9,088
Transportation	ROF	4,000#, Rgh Ter	CNG Vehicle	E820	conversion	Forklift Dies.	NG,Dies.		$2,621	-$10	$0	$2,952	-$2,137	$805	-$1,816
Transportation	ROF	6,000-6,200#, PT	CNG Vehicle	E822	conversion	Forklift Dies.	NG,Dies.		$33,542	-$222	$0	$31,248	-$24,110	$6,916	-$26,626
Transportation	ROF	15,000#	CNG Vehicle	E824	conversion	Forklift Dies.	NG,Dies.		$11,979	-$44	$0	$4,935	-$8,611	-$3,720	-$15,699
Transportation	ROF	Compact, 4 pegr, Class II	CNG Vehicle	B102	conversion	Sedan Gas	NG		$21,936	$6,059	$0	$18,726	-$97,071	-$72,286	-$94,222
Transportation	ROF	Compact, Law Enforcement, Class II	CNG Vehicle	B106	conversion	Sedan Gas	NG		$30,073	$130,367	$0	$50,920	-$125,111	$56,176	$26,103
Transportation	ROF	Station Wagon, Compact, Class II	CNG Vehicle	B150	conversion	Wagon Gas	NG		$35,645	$6,566	$0	$21,939	-$53,856	-$25,351	-$60,996
Transportation	ROF	Modular, 4x2	CNG Vehicle	B162	conversion	Ambulance Gas	NG		$10,485	$6,220	$0	$5,440	-$12,427	-$767	-$11,253
Transportation	ROF	Modular, 4x4	CNG Vehicle	B163	conversion	Ambulance Gas	NG		$8,226	$1,912	$0	$22,135	-$10,194	$13,853	$5,627
Transportation	ROF	Modular, 4x4, 4 litter	CNG Vehicle	B164	conversion	Ambulance Gas	NG		$2,742	$97	$0	$7,378	-$3,398	$4,077	$1,335
Transportation	ROF	Panel Truck, 4x2, 6,999 GVW & under	CNG Vehicle	B168	conversion	Truck Gas	NG		$32,579	$12,695	$0	$46,143	-$30,236	$28,602	-$3,977
Transportation	ROF	Carryall, 4x2, 6,999 GVW & under	CNG Vehicle	B185	conversion	Truck Gas	NG		$54,972	$22,214	$0	$15,494	-$44,875	-$7,268	-$82,238
Transportation	ROF	Carryall, 4x4, 7,500 GVW	CNG Vehicle	B190	conversion	Truck Gas	NG		$4,792	$3,631	$0	$17,557	-$4,190	$16,999	$12,207
Transportation	ROF	Carryall, 4x2, Conv, 15 pegr, 7,700 GVW	CNG Vehicle	B192	conversion	Truck Gas	NG		$17,543	$1,876	$0	$11,793	-$16,281	-$2,612	-$20,155
Transportation	ROF	Utility, 4x4, 6,000 GVW	CNG Vehicle	B198	conversion	Truck Gas	NG		$94,160	$193,809	$0	$363,929	-$71,499	$486,239	$392,078
Transportation	ROF	Utility, 4x4, 3,500 GVW and over	CNG Vehicle	B199	conversion	Truck Gas	NG		$8,759	$2,661	$0	$5,396	-$6,651	$1,406	-$7,353
Transportation	ROF	Compact, 4x2, 4,599 GVW & under	CNG Vehicle	B200	conversion	Pickup Gas	NG		$243,786	$68,825	$0	$130,683	-$288,930	-$91,441	-$335,228
Transportation	ROF	Compact, 4x2, 4,600-5,799 GVW	CNG Vehicle	B204	conversion	Pickup Gas	NG		$64,688	$17,781	$0	$70,827	-$69,176	$19,431	-$45,257
Transportation	ROF	4 dr cab, 4x2, 5,500 GVW	CNG Vehicle	B217	conversion	Pickup Gas	NG		$193,980	$525,140	$0	$316,748	-$229,901	$611,988	$418,007
Transportation	ROF	4 dr cab, 4x4, 7,000-8510 GVW	CNG Vehicle	B222	conversion	Pickup Gas	NG		$60,148	$829,143	$0	$108,847	-$67,879	$870,111	$809,965
Transportation	ROF	Cargo, 4x4, 17,000-20,999 GVW	CNG Vehicle	B239	conversion	Truck Gas	NG		$9,162	$828	$0	$13,925	-$7,496	$7,258	-$1,904
Transportation	ROF	Cargo 4 Dr 4x2, 17,000-20999# GVW	CNG Vehicle	B255	conversion	Truck Gas	NG		$5,012	$1,223	$0	$89,271	-$4,652	$85,843	$80,831
Transportation	ROF	Stake, 4x2, 7000-9999# GVW	CNG Vehicle	B261	conversion	Truck Gas	NG		$77,877	$255,662	$0	$158,817	-$63,714	$350,765	$272,888
Transportation	ROF	Stake	CNG Vehicle	B265	conversion	Truck Gas	NG		$11,453	$1,513	$0	$5,167	-$9,370	-$2,690	-$14,143
Transportation	ROF	Stake, 4x4, 12500-16999# GVW	CNG Vehicle	B274	conversion	Truck Gas	NG		$5,484	$373	$0	$271	-$5,641	-$4,997	-$10,481
Transportation	ROF	Tractor, 44x2, 24000-44500# GVW	CNG Vehicle	B352	conversion	Truck Gas	NG		$8,226	$122	$0	$23,742	-$8,461	$15,402	$7,176
Transportation	ROF	Tractor, Missle/Lox, 6x4, 2400-44500# GVW	CNG Vehicle	B364	conversion	Truck Gas	NG		$5,484	$119	$0	$53,462	-$5,641	$47,940	$42,456
Transportation	ROF	Whse, 4,000-6,999#	CNG Vehicle	E801	conversion	Tractor Gas	NG		$13,710	$1,000	$0	$772	-$14,102	-$12,330	-$26,040
Transportation	ROF	2,000-5,999#, ST	CNG Vehicle	E830	conversion	Forklift Gas	NG		$1,828	$1,589	$0	$3,602	-$1,573	$3,617	$1,789
Transportation	ROF	2,000-5,999#, PT	CNG Vehicle	E831	conversion	Forklift Gas	NG		$3,656	$297	$0	$7,203	-$3,146	$4,354	$699
Transportation	ROF	6,000-9,999#, PT	CNG Vehicle	E832	conversion	Forklift Gas	NG		$10,968	$3,488	$0	$40,708	-$9,438	$34,758	$23,790
Transportation	ROF	15,000-17,999#	CNG Vehicle	E835	conversion	Forklift Gas	NG		$1,828	$378	$0	$745	-$1,673	-$449	-$2,277
Transportation	ROF	Platform, 40K, 463L	CNG Vehicle	E940	conversion	Lift Dies.	NG,Dies.		$3,656	$0	$0	$24,391	-$4,531	$19,860	$16,204
Transportation	ROF	Hustler, 463L, 10K	CNG Vehicle	E956	conversion	Forklift Dies.	NG,Dies.		$3,827	-$82	$0	$8,557	-$1,667	$6,808	$2,981
Transportation	ROF	Compact Sedan	CNG Vehicle	120000	conversion	Sedan Gas	NG		$476,155	$147,275	$0	$386,852	-$1,055,655	-$521,528	-$997,683
Transportation	ROF	Compact Station Wagon	CNG Vehicle	210000	conversion	Wagon Gas	NG		$41,129	$9,238	$0	$25,315	-$182,009	-$147,456	-$188,585
Transportation	ROF	Van, Cargo w/ windows (< 6,000 GVWR)	CNG Vehicle	411100	conversion	Van Gas	NG		$19,167	$6,109	$0	$26,412	-$31,756	$785	-$18,402
Transportation	ROF	5 Passenger Van	CNG Vehicle	411505	conversion	Van Gas	NG		$35,938	$12,284	$0	$20,808	-$59,543	-$26,451	-$62,389
Transportation	ROF	7 Passenger Van	CNG Vehicle	411507	conversion	Van Gas	NG		$275,669	$82,076	$0	$164,078	-$477,586	-$231,432	-$507,100
Transportation	ROF	Pickup, 2 Door Cab, Incl. Compact (< 6,000 GVWR)	CNG Vehicle	415000	conversion	Pickup Gas	NG		$170,107	$44,497	$0	$86,475	-$281,837	-$150,864	-$320,970
Transportation	ROF	Van, Cargo (6,000 - 8,499 GVWR)	CNG Vehicle	421000	conversion	Van Gas	NG		$22,555	$5,099	$0	$31,951	-$39,075	-$2,026	-$24,581
Transportation	ROF	8 Passenger Van (6,000 - 8,499 GVWR)	CNG Vehicle	421508	conversion	Van Gas	NG		$59,553	$10,787	$0	$33,472	-$93,957	-$49,698	$109,251
Transportation	ROF	12 Passenger Van (6,000 - 8,499 GVWR)	CNG Vehicle	421512	conversion	Van Gas	NG		$4,581	$1,208	$0	$2,575	-$7,227	-$3,444	-$8,025
Transportation	ROF	Pickup, 2 Door Cab, Incl. Compact (6,000 - 8,499 GVWR)	CNG Vehicle	425000	conversion	Pickup Gas	NG		$31,146	$11,344	$0	$34,120	-$66,286	-$20,822	-$51,968

TABLE 4.4. (contd)

ERO Category	RI or ROF	Equipment	Description of ERO	ID	ID2	Facility	Exist. Fuel	Result. Fuel/fel	Present Value of Installed Cost (1992 $)	Present Value of Energy Savings (1992 $)	Present Value of Demand Savings (1992 $)	Present Value of O&M Savings (1992 $)	Present Value of Replace. Savings (1992 $)	Present Value of Total Savings (1992 $)	Net Present Value (1992 $)
Transportation	ROF	Pickup, 2 Door Cab, Incl. Compact (8,500 - 12,499 GVWR)	CNG Vehicle	435000	conversion		Pickup Gas	NG	$50,313	$9,426	$0	$55,118	-$23,380	-$18,818	-$69,131
Transportation	ROF	Pickup, Crewcab (8,500 - 12,499 GVWR)	CNG Vehicle	435200	conversion		Pickup Gas	NG	$20,049	$4,351	$0	$22,877	-$34,734	-$7,808	-$27,854
Transportation	ROF	Maint, Tele-Utility, w/Cab	CNG Vehicle	435500	conversion		Truck Gas	NG	$83,538	$12,773	$0	$316,821	-$144,723	$184,871	$101,335
Transportation	ROF	Delivery Van, Cutoff Cab (8,500 - 12,499 GVWR)	CNG Vehicle	436500	conversion		D-Van Gas	NG	$66,829	$21,108	$0	$159,188	-$115,778	$64,515	-$2,313
Transportation	ROF	Multistop, Van (FC) (8,500 - 12,499 GVWR)	CNG Vehicle	438602	conversion		D-Van Gas	NG	$25,591	$7,0.0	$0	$64,062	-$47,956	$23,166	-$2,425
Transportation	ROF	Stake Truck, 2/4 Dr Cab (8,500 - 12,499 GVWR)	CNG Vehicle	438000	conversion		Truck Gas	NG	$63,487	$20,342	$0	$43,588	-$109,990	-$46,059	-$109,546
Transportation	ROF	Utility (Passenger/Cargo) (<6,000 GVWR)	CNG Vehicle	610000	conversion		U-Van Gas	NG	$25,556	$6,315	$0	$11,098	-$42,342	-$24,929	-$50,4[illegible]
Transportation	ROF	5 Passenger Utility (Passenger/Cargo) (<6,000 GVWR)	CNG Vehicle	610005	conversion		U-Van Gas	NG	$19,167	$7,611	$0	$11,098	-$31,756	-$13,048	-$32,215
Transportation	RI	School, 28-29 pegr, 4x2	CNG Vehicle	B121	conversion		Bus Diss.	NG,Diss.	$9,000	-$768	$0	$57,239	-$4,005	$52,466	$43,466
Transportation	RI	School, 42-46 pegr, 4x2	CNG Vehicle	B130	conversion		Bus Diss.	NG,Diss.	$39,000	-$4,533	$0	$104,391	-$17,356	$82,502	$43,502
Transportation	RI	Intercity, 41-51 pegr, 4x2	CNG Vehicle	B139	conversion		Bus Diss.	NG,Diss.	$6,000	-$167	$0	$13,045	-$2,670	$10,208	$4,208
Transportation	RI	Multistop, 4x2, 8,499 GVW & under	CNG Vehicle	B178	conversion		Truck Diss.	NG,Diss.	$12,000	-$190	$0	$435	-$14,611	-$14,567	-$26,567
Transportation	RI	Multistop, 4x2, 1-ton	CNG Vehicle	B180	conversion		Truck Diss.	NG,Diss.	$39,00[illegible]	-$3,329	$0	$127,255	-$48,135	$75,790	$36,790
Transportation	RI	Carryall, 4x2, Conv, 9 pegr	CNG Vehicle	B191	conversion		Truck Diss.	NG,Diss.	$21,000	-$3,320	$0	$130,718	-$25,919	$101,478	$80,478
Transportation	RI	Compact, 4x4, 4,600-5,799 GVW	CNG Vehicle	B211	conversion		Pickup Diss.	NG,Diss.	$21,000	-$28,188	$0	$59,787	-$25,919	$5,682	-$15,318
Transportation	RI	Stake, 4x2, 12,500-16,999 GVW, 1-1/2 ton	CNG Vehicle	B264	conversion		Truck Diss.	NG,Diss.	$36,000	-$4,257	$0	$33,869	-$37,017	-$7,405	-$43,405
Transportation	RI	Tractor, 4x2, 24,000-44,500 GVW	CNG Vehicle	B353	conversion		Truck Diss.	NG,Diss.	$36,0[illegible]	$138	$0	$57,253	-$37,017	$20,097	-$15,903
Transportation	RI	Tractor, 6x4, 24,000-44,500 GVW	CNG Vehicle	B361	conversion		Truck Diss.	NG,Diss.	$51,000	-$1,012	$0	$474,567	-$52,441	$421,114	$370,114
Transportation	RI	4,000#, PT	CNG Vehicle	E816	conversion		Forklift Diss.	NG,Diss.	$15,000	-$67	$0	$18,520	-$12,959	$3,903	-$11,097
Transportation	RI	4,000#, Rgh Ter	CNG Vehicle	E820	conversion		Forklift Diss.	NG,Diss.	$3,000	-$9	$0	$3,383	-$2,592	$782	-$2,218
Transportation	RI	6,000-8,200#, PT	CNG Vehicle	E822	conversion		Forklift Diss.	NG,Diss.	$42,000	-$222	$0	$41,326	-$36,286	$4,818	-$37,182
Transportation	RI	15,000#	CNG Vehicle	E824	conversion		Forklift Diss.	NG,Diss.	$15,000	-$44	$0	$8,527	-$12,559	-$8,477	-$21,477
Transportation	RI	Compact, 4 pegr, Class II	CNG Vehicle	B102	conversion		Sedan Gas	NG	$24,000	$6,594	$0	$20,031	-$104,378	-$77,753	-$101,753
Transportation	RI	Compact, Law Enforcement, Class II	CNG Vehicle	B106	conversion		Sedan Gas	NG	$38,000	$187,858	$0	$62,628	-$156,567	$73,619	$37,619
Transportation	RI	Station Wagon, Compact, Class II	CNG Vehicle	B150	conversion		Wagon Gas	NG	$39,000	$7,148	$0	$23,468	-$58,492	-$27,878	-$66,878
Transportation	RI	Modular, 4x2	CNG Vehicle	B162	conversion		Ambulance Gas	NG	$12,000	$7,350	$0	$6,234	-$14,811	-$1,227	-$13,227
Transportation	RI	Modular, 4x4	CNG Vehicle	B163	conversion		Ambulance Gas	NG	$9,000	$2,081	$0	$23,677	-$11,108	$14,650	$5,650
Transportation	RI	Modular, 4x4, 4 litter	CNG Vehicle	B164	conversion		Ambulance Gas	NG	$3,000	$108	$0	$7,892	-$5,703	$4,295	$1,295
Transportation	RI	Panel Truck, 4x2, 6,999 GVW & under	CNG Vehicle	B188	conversion		Truck Gas	NG	$39,000	$16,317	$0	$56,752	-$40,102	$32,967	-$6,033
Transportation	RI	Carryall, 4x2, 6,999 GVW & under	CNG Vehicle	B185	conversion		Truck Gas	NG	$72,000	$34,392	$0	$22,080	-$74,034	-$17,562	-$89,562
Transportation	RI	Carryall, 4x4, 7,500 GVW	CNG Vehicle	B190	conversion		Truck Gas	NG	$6,000	$5,111	$0	$23,220	-$6,170	$22,161	$16,161
Transportation	RI	Carryall, 4x2, Conv, 15 pegr, 7,700 GVW	CNG Vehicle	B192	conversion		Truck Gas	NG	$21,000	$2,411	$0	$14,505	-$21,593	-$4,678	-$25,678
Transportation	RI	Utility, 4x4, 6,000 GVW	CNG Vehicle	B198	conversion		Truck Gas	NG	$129,000	$331,268	$0	$560,149	-$132,645	$758,772	$629,772
Transportation	RI	Utility, 4x4, 3,500 GVW and over	CNG Vehicle	B199	conversion		Truck Gas	NG	$12,000	$4,549	$0	$8,305	-$12,339	$515	-$11,485
Transportation	RI	Compact, 4x2, 4,599 GVW & under	CNG Vehicle	B200	conversion		Pickup Gas	NG	$279,000	$78,958	$0	$149,742	-$344,353	-$115,652	-$394,652
Transportation	RI	Compact, 4x2, 4,600-5,799 GVW	CNG Vehicle	B204	conversion		Pickup Gas	NG	$81,000	$25,027	$0	$93,669	-$99,973	$18,722	-$62,278
Transportation	RI	4 dr cab, 4x2, 5,500 GVW	CNG Vehicle	B217	conversion		Pickup Gas	NG	$222,000	$620,488	$0	$382,999	-$274,001	$709,485	$487,485
Transportation	RI	4 dr cab, 4x4, 7,000-8510 GVW	CNG Vehicle	B222	conversion		Pickup Gas	NG	$72,000	$1,065,679	$0	$133,875	-$88,865	$1,110,689	$1,038,689
Transportation	RI	Cargo, 4x4, 17,000-20,999 GVW	CNG Vehicle	B239	conversion		Truck Gas	NG	$12,000	$1,282	$0	$19,844	-$12,339	$8,787	-$3,213
Transportation	RI	Cargo 4 Dr 4x2, 17,000-20999# GVW	CNG Vehicle	B255	conversion		Truck Gas	NG	$6,000	$1,572	$0	$109,798	-$6,170	$105,201	$99,201
Transportation	RI	Stake, 4x2, 7000-9999# GVW	CNG Vehicle	B261	conversion		Truck Gas	NG	$102,000	$395,818	$0	$228,325	-$104,882	$517,261	$415,261
Transportation	RI	Stake	CNG Vehicle	B265	conversion		Truck Gas	NG	$15,000	$2,342	$0	$7,363	-$15,424	-$5,719	-$20,719
Transportation	RI	Stake, 4x4, 12500-16999# GVW	CNG Vehicle	B274	conversion		Truck Gas	NG	$6,000	$406	$0	$290	-$6,170	-$5,474	-$11,474
Transportation	RI	Tractor, 44x2, 24000-44500# GVW	CNG Vehicle	a352	conversion		Truck Gas	NG	$9,000	$132	$0	$25,396	-$9,254	$16,274	$7,274
Transportation	RI	Tractor, Missile/Lox, 6x4, 24,0-44500# GVW	CNG Vehicle	B364	conversion		Truck Gas	NG	$6,000	$129	$0	$57,187	-$6,170	$51,146	$45,146
Transportation	RI	Whee, 4,000-6,999#	CNG Vehicle	E801	conversion		Tractor Gas	NG	$15,000	$1,088	$0	$826	-$15,424	-$13,510	-$28,510
Transportation	RI	[illegible],000-5,999#, ST	CNG Vehicle	E830	conversion		Forklift Gas	NG	$2,000	$1,729	$0	$3,853	-$1,728	$3,854	$1,854
Transportation	RI	2,000-5,999#, PT	CNG Vehicle	E831	conversion		Forklift Gas	NG	$4,000	$323	$0	$7,705	-$3,456	$4,573	$573
Transportation	RI	6,000-9,999#, PT	CNG Vehicle	E832	conversion		Forklift Gas	NG	$12,000	$3,796	$0	$43,545	-$10,368	$36,973	$24,973
Transportation	RI	15,000-17,999#	CNG Vehicle	E835	conversion		Forklift Gas	NG	$2,000	$412	$0	$797	-$1,728	-$519	-$2,519
Transportation	RI	Platform, 40K, 463L	CNG Vehicle	E940	conversion		Lift Diss.	NG,Diss.	$4,000	$0	$0	$28,091	-$4,937	$21,154	$17,154
Transportation	RI	Hustler, 463L, 10K	CNG Vehicle	E958	conversion		Forklift Diss.	NG,Diss.	$8,000	-$87	$0	$18,878	-$5,184	$11,607	$5,607
Transportation	RI	Compact Sedan	CNG Vehicle	120000	conversion		Sedan Gas	NG	$570,000	$189,289	$0	$475,802	-$1,340,963	-$675,872	-$1,245,872
Transportation	RI	Compact Station Wagon	CNG Vehicle	210000	conversion		Wagon Gas	NG	$45,000	$10,054	$0	$27,079	-$195,709	-$158,576	-$203,576
Transportation	RI	Van, Cargo w/ windows (<6,000 GVWR)	CNG Vehicle	411100	conversion		Van Gas	NG	$24,000	$8,599	$0	$34,931	-$44,513	-$983	-$24,983
Transportation	RI	5 Passenger Van	CNG Vehicle	411505	conversion		Van Gas	NG	$45,000	$17,289	$0	$27,519	-$83,461	-$38,653	-$83,653
Transportation	RI	7 Passenger Van	CNG Vehicle	411507	conversion		Van Gas	NG	$330,000	$105,491	$0	$201,806	-$612,050	-$304,754	-$634,754
Transportation	RI	Pickup, 2 Door Cab, Incl. Compact (<6,000 GVWR)	CNG Vehicle	415000	conversion		Pickup Gas	NG	$213,000	$62,829	$0	$114,365	-$395,050	-$218,056	-$431,056
Transportation	RI	Van, Cargo (6,000 - 8,499 GVWR)	CNG Vehicle	421000	conversion		Van Gas	NG	$27,000	$6,553	$0	$39,297	-$50,077	-$4,227	-$31,227
Transportation	RI	8 Passenger Van (6,000 - 8,499 GVWR)	CNG Vehicle	421508	conversion		Van Gas	NG	$78,000	$16,701	$0	$47,699	-$144,666	-$80,266	-$158,266
Transportation	RI	12 Passenger Van (6,000 - 8,499 GVWR)	CNG Vehicle	421512	conversion		Van Gas	NG	$6,000	$1,871	$0	$3,669	-$11,128	-$5,588	-$11,588

TABLE 4.4. (contd)

ERO Category	RI or ROF	Equipment	Description of ERO	ID	ID2	Facility	Exist. Fuel	Result. Fuel(s)	Present Value of Installed Cost (1992 $)	Present Value of Energy Savings (1992 $)	Present Value of Demand Savings (1992 $)	Present Value of O&M Savings (1992 $)	Present Value of Replace. Savings (1992 $)	Present Value of Total Savings (1992 $)	Net Present Value (1992 $)
Transportation	RI	Pickup, 2 Door Cab, Incl. Compact (6,000 - 8,499 GVWR)	CNG Vehicle	425000	conversion		Pickup Gas	NG	$39,000	$15,967	$0	$45,124	-$91,750	-$30,659	-$69,659
Transportation	RI	Pickup, 2 Door Cab, Incl. Compact (8,500 - 12,499 GVWR)	CNG Vehicle	435000	conversion		Pickup Gas	NG	$63,000	$13,287	$0	$72,892	-$116,846	-$30,687	-$93,687
Transportation	RI	Pickup, Crewcab (8,500 - 12,499 GVWR)	CNG Vehicle	435200	conversion		Pickup Gas	NG	$24,000	$5,592	$0	$27,768	-$44,513	-$11,153	-$35,153
Transportation	RI	Maint, Tele-Utility, w/Cab	CNG Vehicle	435500	conversion		Truck Gas	NG	$100,000	$16,417	$0	$389,668	-$185,470	$220,616	$120,616
Transportation	RI	Delivery Van, Cutoff Cab (8,500 - 12,499 GVWR)	CNG Vehicle	436500	conversion		D-Van Gas	NG	$80,000	$27,130	$0	$195,788	-$148,376	$74,542	-$5,458
Transportation	RI	Multistop, Van (FC) (8,500 - 12,499 GVWR)	CNG Vehicle	436602	conversion		D-Van Gas	NG	$28,000	$7,684	$0	$68,526	-$51,931	$24,278	-$3,722
Transportation	RI	Stake Truck, 2/4 Dr Cab (8,500 - 12,499 GVWR)	CNG Vehicle	438000	conversion		Truck Gas	NG	$76,000	$26,146	$0	$53,611	-$140,957	-$61,201	-$137,201
Transportation	RI	Utility (Passenger/Cargo) (<6,000 GVWR)	CNG Vehicle	610000	conversion		U-Van Gas	NG	$32,000	$8,888	$0	$14,677	-$59,350	-$35,786	-$67,786
Transportation	RI	5 Passenger Utility (Passenger/Cargo) (<6,000 GVWR)	CNG Vehicle	610005	conversion		U-Van Gas	NG	$24,000	$10,712	$0	$14,677	-$44,513	-$19,124	-$43,124
Transportation	RI	School, 28-29 pegr, 4x2	CNG Vehicle	8121	conversion		Bus Dies.	NG,Dies.	$9,000	-$768	$0	$57,239	-$4,005	$52,466	$43,466
Transportation	RI	School, 42-46 pegr, 4x2	CNG Vehicle	8130	conversion		Bus Dies.	NG,Dies.	$39,000	-$4,533	$0	$104,391	-$17,356	$82,502	$43,502
Transportation	RI	Intercity, 41-51 pegr, 4x2	CNG Vehicle	8139	conversion		Bus Dies.	NG,Dies.	$6,000	-$187	$0	$13,045	-$2,670	$10,208	$4,208
Transportation	RI	Multistop, 4x2, 8,499 GVW & under	CNG Vehicle	8176	conversion		Truck Dies.	NG,Dies.	$12,000	-$190	$0	$435	-$14,811	-$14,567	-$26,567
SVPP (b)		SVPP	Peak-Shave at SVPP				SVPP Elect.	NG	$0	$5,872,259	$4,886,082	-$59,314	$0	$10,699,027	$10,699,027

Notes:

(a) Demand has not been considered due to uncertainty about contribution to monthly peak.
(b) SVPP O&M savings consists of $580,288 credit from sale of emissions permits, less $819,602 increased O&M.
SVPP reported values are for 1994. Generation will decline over time. See Appendix A. Net Electricity generation with increased natural gas use.
While the analysis for the Volume 3: Resource Assessment used a 4.6% discount rate, the SVPP analysis (PNL-8553) used a 4.0% discount rate.

TABLE 4.5. LCC Results: EROs Constituting the Minimum Life-Cycle Cost Efficiency Resource

ERO Category	RI or ROF	Equipment	Description of ERO	ID	ID2	Exist. Facility Fuel	Result. Fuel	Present Value of Installed Cost (1992 $)	Present Value of Energy Savings (1992 $)	Present Value of Demand Savings (1992 $)	Present Value of O&M Savings (1992 $)	Present Value of Replace. Savings (1992 $)	Present Value of Total Savings (1992 $)	Net Present Value (1992 $)	Value Index
SVPP (b)		SVPP	Peak-Shave at SVPP			SVPP Elect.	NG	$0	$5,872,259	$4,886,082	-$59,314	$0	$10,699,027	$10,699,027	(c)
Motors	RI	fan, supply, tunnel	Effic.-1		3 mef-50	730 Elect.	Elect.	$2,698	$69,068	$9,636	$0	$1,923	$80,627	$77,931	28.90
Space Heating	RI	Boiler	Dampers		3b all sizes		Propane	$3,112	$85,008	$0	$0	$594	$85,600	$82,489	26.51
Space Heating	RI	Boiler	Dampers		3a all sizes		NG	$22,090	$559,983	$0	$0	$4,219	$564,203	$542,113	24.54
Motors	RI	SA5 Well Pump	Effic.-1		5 wp-75		Elect.	$4,395	$101,830	(a)	$0	$1,781	$103,610	$99,216	22.57
Motors	RI	fan, exhaust	Effic.-1		6 mef-15	8401	Elect.	$1,139	$19,061	$2,659	$0	$796	$22,516	$21,377	18.77
Transportation	RI	Cargo 4 Dr 4x2, 17,000-20999# GVW	CNG Vehicle		B255 conversion	Truck	Gas	$6,000	$1,572	$0	$109,798	-$6,170	$105,201	$99,201	16.53
Motors	RI	Sewage Station	2-SPD		8 mep-7.5	743	Elect.	$1,132	$18,079	$497	$0	$109	$18,685	$17,554	15.51
Motors	RI	Sewage Station	2-SPD		7 mep-7.5	743	Elect.	$1,132	$18,079	$497	$0	$109	$18,685	$17,554	15.51
Motors	RI	fan, supply tunnel 3	Effic.-1		12 mf-10	730	Elect.	$864	$12,057	$1,682	$0	$507	$14,247	$13,382	15.48
Transportation	RI	4 dr cab, 4x4, 7,000-8510 GVW	CNG Vehicle		B222 conversion	Pickup	Gas	$72,000	$1,065,679	$0	$133,875	-$88,865	$1,110,689	$1,038,689	14.43
Motors	RI	fan, exhaust	Effic.-1		2 mef-7.5	8401	Elect.	$728	$9,107	$1,271	$0	$496	$10,873	$10,145	13.94
Lighting	RI	INC 150 CEIL	CFL 27 INTEGRAL UNIT		22 MTRPOOL	10726	Elect.	$881	$9,643	$2,648	$627	$0	$12,917	$12,037	13.67
Motors	RI	pump, chilled water	Effic.-1		6 mcwp-15	730	Elect.	$1,139	$15,810	(a)	$0	$796	$16,606	$15,467	13.58
Motors	RI	fan, exhaust	Effic.-1		5 mef-15	730	Elect.	$1,139	$15,810	(a)	$0	$796	$16,606	$15,467	13.58
Motors	RI	pump, air wash	Effic.-1		9 mp-15	730	Elect.	$1,139	$15,810	(a)	$0	$796	$16,606	$15,467	13.58
Motors	RI	SA4 Well Pump	Effic.-1		4 wp-60		Elect.	$3,182	$43,413	(a)	$0	$2,174	$45,587	$42,405	13.33
Motors	RI	SA7 Well Pump	Effic.-1		7 wp-75		Elect.	$4,395	$56,040	(a)	$0	$1,781	$57,820	$53,425	12.15
Motors	RI	fan, exhaust	Effic.-1		3 mef-5	8401	Elect.	$535	$5,458	$761	$0	$365	$6,585	$6,050	11.32
Motors	RI	fan, evaporative condenser	Effic.-1		16 mcf-10	730	Elect.	$864	$10,001	(a)	$0	$507	$10,508	$9,644	11.16
Motors	RI	SA6 Well Pump	Effic.-1		6 wp-75		Elect.	$4,395	$50,958	(a)	$0	$1,781	$52,739	$48,343	11.00
Motors	RI	Sewage Station	2-SPD		1 mep-5	393	Elect.	$818	$9,478	-$8	$0	$150	$9,622	$8,803	10.76
Motors	RI	Sewage Station	2-SPD		2 mep-5	393	Elect.	$818	$9,478	-$8	$0	$150	$9,622	$8,803	10.76
Motors	RI	fan, launch control rm	Effic.-1		17 mf-7.5	730	Elect.	$728	$7,554	(a)	$0	$496	$8,049	$7,321	10.06
Motors	RI	condenser pump	Effic.-1		5 mcp-40	8401	Elect.	$2,297	$22,873	(a)	$0	$1,391	$24,064	$21,767	9.48
Motors	RI	condenser pump	Effic.-1		1 mcp-25	8401	Elect.	$1,610	$13,753	(a)	$0	$1,166	$14,919	$13,309	8.27
Motors	RI	fan, booster landlines rm	Effic.-1		18 mbf-5	730	Elect.	$535	$4,527	(a)	$0	$365	$4,893	$4,358	8.15
Motors	RI	fan, vehicle recorder rm	Effic.-1		4 mf-5	730	Elect.	$535	$4,527	(a)	$0	$365	$4,893	$4,358	8.15
Motors	RI	fan, control rm 103	Effic.-1		9 mf-5	730	Elect.	$535	$4,527	(a)	$0	$365	$4,893	$4,358	8.15
Lighting	RI	INC 150 WALL	CFL 27 INTEGRAL UNIT		47 PRDCTN	8337	Elect.	$26	$104	$105	$17	$0	$226	$200	7.76
Transportation	RI	Tractor, Misella/Lox, 6x4, 2400-44500# GVW	CNG Vehicle		B364 conversion	Truck	Gas	$6,000	$129	$0	$57,187	-$6,170	$51,146	$45,146	7.52
Motors	RI	SAh Booster Pump	Effic.-1		13 mbp-150		Elect.	$8,046	$61,791	(a)	$0	$5,986	$67,776	$59,730	7.42
Motors	RI	SAf Booster Pump	Effic.-1		11 mbp-150		Elect.	$8,046	$61,791	(a)	$0	$5,986	$67,776	$59,730	7.42
Motors	RI	SAe Booster Pump	Effic.-1		10 mbp-150		Elect.	$8,046	$61,791	(a)	$0	$5,986	$67,776	$59,730	7.42
Motors	RI	SAg Booster Pump	Effic.-1		12 mbp-150		Elect.	$8,046	$61,791	(a)	$0	$5,986	$67,776	$59,730	7.42
Transportation	RI	Tractor, 6x4, 24,000-44,500 GVW	CNG Vehicle		B361 conversion	Truck	Diss.	$51,000	-$1,012	$0	$474,587	-$52,441	$421,114	$370,114	7.26
Motors	RI	fan	Effic.-1		9 mf-20	8401	Elect.	$1,439	$10,754	(a)	$0	$1,007	$11,760	$10,321	7.17
Motors	RI	fan	Effic.-1		4 mf-20	8401	Elect.	$1,439	$10,754	(a)	$0	$1,007	$11,760	$10,321	7.17
Motors	RI	air handler	Effic.-1		4 mef-20	945	Elect.	$1,439	$10,754	(a)	$0	$711	$11,464	$10,026	6.97
Motors	RI	Sewage Station	2-SPD		10 mep-3	898	Elect.	$702	$5,243	-$93	$0	$234	$5,384	$4,683	6.67
Motors	RI	Sewage Station	2-SPD		11 mep-3	898	Elect.	$702	$5,243	-$93	$0	$234	$5,384	$4,683	6.67
Motors	RI	Sewage Station	2-SPD		16 mep-3	23260	Elect.	$702	$5,243	-$93	$0	$234	$5,384	$4,683	6.67
Motors	RI	Sewage Station	2-SPD		15 mep-3	23260	Elect.	$702	$5,243	-$93	$0	$234	$5,384	$4,683	6.67
Motors	RI	Sewage Station	2-SPD		9 mep-3	769	Elect.	$702	$5,242	-$93	$0	$234	$5,383	$4,682	6.67
Motors	RI	pump, cooling tower	Effic.-1		10 mct-15	8401	Elect.	$1,139	$7,859	(a)	$0	$796	$8,656	$7,517	6.60
Motors	RI	Sewage Station	2-SPD		3 mep-3	488	Elect.	$702	$5,243	-$93	$0	-$17	$5,133	$4,432	6.32
Motors	RI	Sewage Station	2-SPD		4 mep-3	488	Elect.	$702	$5,242	-$93	$0	-$17	$5,132	$4,431	6.31
Process	RI	Electric Steam Boilers	Pneum. Humid. w/ Bypass		2	SLC-4E		$100,400	$550,307	(a)	$46,966	$93,730	$691,003	$590,602	5.88
Water Heating	RI	Water Heater	Low Flow SH		8a Residential	HSG-FAM	NG	$38,260	$294,017	$0	$0	-$33,055	$260,962	$222,702	5.82
Motors	RI	fan, exhaust	Effic.-1		1 mef-60	719	Elect.	$3,182	$20,791	(a)	$0	$182	$20,972	$17,790	5.59
Motors	RI	fan	Effic.-1		8 mf-40	717	Elect.	$2,297	$13,558	(a)	$0	$1,391	$14,950	$12,653	5.51
Motors	RI	fan	Effic.-1		2 mf-40	717	Elect.	$2,297	$13,558	(a)	$0	$1,391	$14,950	$12,653	5.51
Motors	RI	fan	Effic.-1		17 mf-40	717	Elect.	$2,297	$13,558	(a)	$0	$1,391	$14,950	$12,653	5.51
Motors	RI	fan	Effic.-1		6 mf-40	717	Elect.	$2,297	$13,558	(a)	$0	$1,391	$14,950	$12,653	5.51
Motors	RI	fan, supply	Effic.-2		15 msf-3	730	Elect.	$340	$1,803	(a)	$0	$370	$2,173	$1,834	5.40
Motors	RI	pump, water circ	Effic.-1		7 mcwp-10	8401	Elect.	$864	$4,972	(a)	$0	$507	$5,479	$4,615	5.34
Lighting	RI	INC 500 PEND	MH 175 PEND		62 R&D-2	8310	Elect.	$35,557	$150,743	$41,398	$29,218	$0	$221,359	$185,802	5.23
Transportation	RI	Utility, 4x4, 6,000 GVW	CNG Vehicle		B198 conversion	Truck	Gas	$129,000	$331,268	$0	$560,149	-$132,645	$758,772	$629,772	4.88
Motors	RI	Sewage Station	2-SPD		14 mep-2	21150	Elect.	$561	$3,257	-$105	$0	$137	$3,284	$2,724	4.86
Transportation	RI	School, 28-29 pasr, 4x2	CNG Vehicle		B121 conversion	Bus	Diss.	$9,000	-$768	$0	$57,239	-$4,005	$52,466	$43,466	4.83
Motors	RI	Sewage Station	2-SPD		6 mep-2	743	Elect.	$561	$3,258	-$109	$0	$31	$3,180	$2,619	4.67

TABLE 4.5. (contd)

ERO Category	RI or ROF	Equipment	Description of ERO	ID	ID2	Exist. Facility Fuel	Result. Fuel	Present Value of Installed Cost (1992 $)	Present Value of Energy Savings (1992 $)	Present Value of Demand Savings (1992 $)	Present Value of O&M Savings (1992 $)	Present Value of Replacs. Savings (1992 $)	Present Value of Total Savings (1992 $)	Net Present Value (1992 $)	Value Index
Motors	RI	SY5 Well Pump	Effic.-1	2	wp-60	Elect.	Elect.	$3,182	$15,909	(a)	$0	$1,530	$17,438	$14,256	4.48
Lighting	RI	EXIT - INC (2X15)	EXIT - LED	24	MTRPOOL	10726 Elect.	Elect.	$5,689	$5,015	$721	$24,954	$0	$30,689	$25,000	4.39
Lighting	RI	EXIT - INC (2X15)	EXIT - LED	8	BRK/ADM	13140 Elect.	Elect.	$49,144	$43,320	$6,229	$215,569	$0	$265,119	$215,975	4.39
Lighting	RI	EXIT - INC (2X15)	EXIT - LED	94	WHS	11510 Elect.	Elect.	$64,125	$56,526	$8,128	$281,285	$0	$345,940	$281,815	4.39
Lighting	RI	EXIT - INC (2X15)	EXIT - LED	4	ADMIN	11777 Elect.	Elect.	$66,443	$58,570	$8,422	$291,452	$0	$358,444	$292,001	4.39
Lighting	RI	EXIT - INC (2X15)	EXIT - LED	25	PRDCTN	8337 Elect.	Elect.	$4,262	$3,757	$540	$18,697	$0	$22,995	$18,732	4.39
Lighting	RI	EXIT - INC (2X15)	EXIT - LED	67	R&D-2	398 Elect.	Elect.	$85,465	$75,338	$10,833	$374,893	$0	$461,063	$375,598	4.39
Lighting	RI	EXIT - INC (2X15)	EXIT - LED	96	WHS	11136 Elect.	Elect.	$524	$462	$66	$2,300	$0	$2,829	$2,305	4.39
Lighting	RI	EXIT - INC (2X15)	EXIT - LED	90	TRAING	14006 Elect.	Elect.	$18,280	$16,114	$2,317	$80,185	$0	$98,616	$80,336	4.39
Lighting	RI	EXIT - INC (2X15)	EXIT - LED	88	SHOP	1785 Elect.	Elect.	$18,884	$16,646	$2,394	$82,835	$0	$101,874	$82,990	4.39
Lighting	RI	EXIT - INC (2X15)	EXIT - LED	11	COMCATN	1782 Elect.	Elect.	$33,019	$29,107	$4,185	$144,840	$0	$178,132	$145,112	4.39
Motors	RI	SY3 Well Pump	Effic.-2	1	wp-75	Elect.	Elect.	$2,676	$12,756	(a)	$0	$1,571	$14,327	$11,652	4.35
Motors	RI	fan, supply	Effic.-1	6	mef-25	715 Elect.	Elect.	$1,610	$8,224	(a)	$0	$355	$8,579	$6,969	4.33
Motors	RI	fan	Effic.-2	11	mf-75	717 Elect.	Elect.	$2,676	$11,827	(a)	$0	$2,427	$14,254	$11,579	4.33
Motors	RI	fan	Effic.-2	18	mf-75	717 Elect.	Elect.	$2,676	$11,827	(a)	$0	$2,427	$14,254	$11,579	4.33
Motors	RI	fan	Effic.-2	10	mf-75	717 Elect.	Elect.	$2,676	$11,827	(a)	$0	$2,427	$14,254	$11,579	4.33
Motors	RI	fan	Effic.-2	20	mf-75	717 Elect.	Elect.	$2,676	$11,827	(a)	$0	$2,427	$14,254	$11,579	4.33
Lighting	RI	EXIT - INC (2X15)	EXIT - LED	85	R&D-1	398 Elect.	Elect.	$79,137	$69,760	$3,344	$347,136	$0	$420,239	$341,102	4.31
Transportation	RI	Platform, 40K, 463L	CNG Vehicle	E940	conversion	Lift Dies.	NG,Dies.	$4,000	$0	$0	$26,091	-$4,937	$21,154	$17,154	4.29
Motors	RI	fan, launch control racks	Effic.-1	14	mf-5	730 Elect.	Elect.	$535	$2,355	(a)	$0	$365	$2,720	$2,186	4.09
Motors	RI	fan, rack supply	Effic.-1	2	mf-5	730 Elect.	Elect.	$535	$2,355	(a)	$0	$365	$2,720	$2,186	4.09
Transportation	RI	Stake, 4x2, 7000-9999# GVW	CNG Vehicle	B281	conversion	Truck Gas	NG	$102,000	$395,818	$0	$228,325	-$104,882	$517,261	$415,261	4.07
Motors	RI	SAd Booster Pump	Effic.-1	9	mbp-100	Elect.	Elect.	$4,788	$20,695	(a)	$0	$3,487	$24,182	$19,394	4.05
Motors	RI	SAb Booster Pump	Effic.-1	7	mbp-100	Elect.	Elect.	$4,788	$20,695	(a)	$0	$3,487	$24,182	$19,394	4.05
Motors	RI	SAe Booster Pump	Effic.-1	6	mbp-100	Elect.	Elect.	$4,788	$20,695	(a)	$0	$3,487	$24,182	$19,394	4.05
Motors	RI	SAc Booster Pump	Effic.-1	8	mbp-100	Elect.	Elect.	$4,788	$20,695	(a)	$0	$3,487	$24,182	$19,394	4.05
Motors	RI	fan	Effic.-1	6	mf-40	734 Elect.	Elect.	$2,297	$10,169	(a)	$0	$1,391	$11,560	$9,263	4.03
Motors	RI	fan	Effic.-1	4	mf-40	734 Elect.	Elect.	$2,297	$10,169	(a)	$0	$1,391	$11,560	$9,263	4.03
Motors	RI	fan	Effic.-1	3	mf-40	734 Elect.	Elect.	$2,297	$10,169	(a)	$0	$1,391	$11,560	$9,263	4.03
Motors	RI	fan	Effic.-1	1	mf-40	734 Elect.	Elect.	$2,297	$10,169	(a)	$0	$1,391	$11,560	$9,263	4.03
Lighting	RI	INC 100 CEIL	CFL 27 INTEGRAL UNIT	46	PRDCTN	8337 Elect.	Elect.	$26	$62	$62	$5	$0	$129	$103	3.99
Motors	RI	air handler	Effic.-1	3	mef-2	945 Elect.	Elect.	$370	$1,672	(a)	$0	$142	$1,814	$1,444	3.90
Transportation	RI	Carryall, 4x2, Conv, 9 pegr	CNG Vehicle	B191	conversion	Truck Dies.	NG,Dies.	$21,000	-$3,320	$0	$130,718	-$25,919	$101,478	$80,478	3.83
Motors	RI	pump	Effic.-1	2	mp-1.5	945 Elect.	Elect.	$341	$1,297	$181	$0	$143	$1,621	$1,280	3.75
Motors	RI	Sewage Station	2-SPD	12	mep-1.5	898 Elect.	Elect.	$514	$2,339	-$102	$0	$143	$2,379	$1,866	3.63
Motors	RI	pump, chilled water circ	Effic.-2	2	mcwp-75	719 Elect.	Elect.	$2,676	$11,827	(a)	$0	$398	$12,225	$9,549	3.57
Motors	RI	pump, chilled water circ	Effic.-2	6	mcwp-75	719 Elect.	Elect.	$2,676	$11,827	(a)	$0	$398	$12,225	$9,549	3.57
Motors	RI	fan, supply	Effic.-1	3	mef-25	738 Elect.	Elect.	$1,610	$6,168	(a)	$0	$1,166	$7,334	$5,724	3.56
Motors	RI	fan, control rm 102	Effic.-1	11	mf-2	730 Elect.	Elect.	$370	$1,445	(a)	$0	$208	$1,653	$1,283	3.47
Motors	RI	fan, control rm 101	Effic.-1	7	mf-2	730 Elect.	Elect.	$370	$1,445	(a)	$0	$208	$1,653	$1,283	3.47
Motors	RI	fan, supply	Effic.-2	10	mef-300	719 Elect.	Elect.	$11,822	$49,881	(a)	$0	$1,604	$51,485	$39,663	3.35
Motors	RI	fan, booster	Effic.-2	11	mbf-300	719 Elect.	Elect.	$11,822	$49,881	(a)	$0	$1,604	$51,485	$39,663	3.35
Motors	RI	fan, booster	Effic.-2	12	mbf-300	719 Elect.	Elect.	$11,822	$49,881	(a)	$0	$1,604	$51,485	$39,663	3.35
Motors	RI	fan, supply	Effic.-1	18	mef-15	715 Elect.	Elect.	$1,139	$4,700	(a)	$0	$236	$4,936	$3,797	3.33
Motors	RI	pump, condenser	Effic.-1	11	mcp-15	715 Elect.	Elect.	$1,139	$4,700	(a)	$0	$236	$4,936	$3,797	3.33
Motors	RI	fan, supply	Effic.-1	17	mef-15	715 Elect.	Elect.	$1,139	$4,700	(a)	$0	$236	$4,936	$3,797	3.33
Space Heating	RI	Weatherization	Weatherization Pkg.	3a		HSG-FAM NG	NG	$78,433	$339,640	$0	$0	$0	$339,640	$261,207	3.33
Lighting	RI	MERC 400 PEND	HPS 200 PEND	64	R&D-2	8310 Elect.	Elect.	$36,010	$110,725	$40,279	-$5,950	$0	$145,154	$109,144	3.03
Lighting	RI	MERCURY VAPOR 400W CEIL	HPS 200 PEND	65	R&D-2	398 Elect.	Elect.	$3,201	$10,165	$2,792	-$697	$0	$12,259	$9,058	2.83
Motors	RI	fan, supply	Effic.-1	1	mef-15	738 Elect.	Elect.	$1,139	$3,525	(a)	$0	$796	$4,321	$3,182	2.79
Motors	RI	Sewage Station	2-SPD	5	mep-1.33	535 Elect.	Elect.	$561	$2,074	-$91	$0	$137	$2,120	$1,560	2.78
Motors	RI	heat exchanger and pump	Effic.-1	1	mp-1.5	730 Elect.	Elect.	$341	$1,075	(a)	$0	$208	$1,283	$942	2.76
Motors	RI	heat exchanger and pump	Effic.-1	10	mp-1.5	730 Elect.	Elect.	$341	$1,075	(a)	$0	$208	$1,283	$942	2.76
Motors	RI	pump, evaporative condenser	Effic.-1	13	mcp-1.5	730 Elect.	Elect.	$341	$1,075	(a)	$0	$208	$1,283	$942	2.76
Motors	RI	fan, cooling tower	Effic.-2	8	mctf-3	8401 Elect.	Elect.	$340	$896	(a)	$0	$370	$1,266	$927	2.73
Motors	RI	SV3 Well Pump	Effic.-1	9	wp-100	Elect.	Elect.	$4,788	$14,319	(a)	$0	$3,487	$17,806	$13,017	2.72
Transportation	RI	Carryall, 4x4, 7,500 GVW	CNG Vehicle	B190	conversion	Truck Gas	NG	$6,000	$5,111	$0	$23,220	-$6,170	$22,161	$16,161	2.69
Motors	RI	fan, supply	Effic.-1	9	mef-10	715 Elect.	Elect.	$864	$2,973	(a)	$0	$126	$3,099	$2,235	2.59
Motors	RI	fan, exhaust	Effic.-1	12	mef-10	715 Elect.	Elect.	$864	$2,973	(a)	$0	$126	$3,099	$2,235	2.59
Motors	RI	pump, hot water circ	Effic.-1	1	mhwp-1	945 Elect.	Elect.	$309	$817	$114	$0	$161	$1,091	$782	2.53
Motors	RI	SV1 Well Pump	Effic.-1	8	wp-100	Elect.	Elect.	$4,788	$13,183	(a)	$0	$3,487	$16,670	$11,882	2.48

TABLE 4.5. (contd)

ERO Category	RI or ROF	Equipment	Description of ERO	ID	ID2	Exist. Facility Fuel	Result. Fuel	Present Value of Installed Cost (1992 $)	Present Value of Energy Savings (1992 $)	Present Value of Demand Savings (1992 $)	Present Value of O&M Savings (1992 $)	Present Value of Replace. Savings (1992 $)	Present Value of Total Savings (1992 $)	Net Present Value (1992 $)	Value Index
Water Heating	ROF	Water Heater	R-11 Tank Wrap	6b	Residential	HSG-FAM NG	NG	$92,001	$377,707	$0	$0	-$61,377	$316,329	$224,328	2.44
Water Heating	ROF	Water Heater	R-11 Tank Wrap	7b	Commercial	ADMIN;R/D NG	NG	$11,572	$47,495	$0	$0	-$7,720	$39,775	$28,204	2.44
Lighting	RI	MERCURY VAPOR 400W WALL	HPS 200 WALL	66	R&D-2	398 Elect.	Elect.	$5,375	$15,248	$4,187	-$1,046	$0	$18,389	$13,014	2.42
Lighting	RI	FL 2X4 4-40 STD	FL 2X4 3-T8 ELC REF	39	PRDCTN	8337 Elect.	Elect.	$217	$558	$80	$94	$0	$732	$515	2.37
Motors	RI	pump, air washer	Effic.-1	15	mf-7.5	715 Elect.	Elect.	$728	$2,246	(a)	$0	$143	$2,389	$1,661	2.28
Motors	RI	fan, supply	Effic.-1	5	mef-7.5	715 Elect.	Elect.	$728	$2,246	(a)	$0	$143	$2,389	$1,661	2.28
Motors	RI	Sewage Station	2-SPD	13	mep-1	1801 Elect.	Elect.	$467	$1,488	-$82	$0	$101	$1,507	$1,039	2.22
Motors	RI	pump	Effic.-1	5	mp-5	717 Elect.	Elect.	$535	$1,346	(a)	$0	$365	$1,711	$1,176	2.20
Motors	RI	pump	Effic.-1	3	mp-5	717 Elect.	Elect.	$535	$1,346	(a)	$0	$365	$1,711	$1,176	2.20
Transportation	RI	4 dr cab, 4x2, 5,500 GVW	CNG Vehicle	8217	conversion	Pickup Gas	NG	$222,000	$620,488	$0	$362,999	-$274,001	$709,485	$487,485	2.20
Process	RI	Steam Boilers	Pneumatic Humidifiers	1		SLC-4E		$125,000	$57,279	(a)	$314,083	$27,630	$398,992	$273,992	2.19
Motors	RI	fan, evaporative condenser	Effic.-1	2	mcf-10	738 Elect.	Elect.	$884	$2,230	(a)	$0	$507	$2,737	$1,873	2.17
Motors	RI	fan, supply	Effic.-1	9	mef-10	738 Elect.	Elect.	$884	$2,230	(a)	$0	$507	$2,737	$1,873	2.17
Motors	RI	fan, supply	Effic.-1	8	mef-10	738 Elect.	Elect.	$884	$2,230	(a)	$0	$507	$2,737	$1,873	2.17
Lighting	RI	INC 4-60 CEIL	CFL 4-11 CEIL	14	HSG-FAM	(411) Elect.	Elect.	$183,779	$390,061	$127,268	$53,877	$0	$571,206	$387,428	2.11
Transportation	RI	6,000-9,999#, PT	CNG Vehicle	E832	conversion	Forklift Gas	NG	$12,000	$3,796	$0	$43,545	-$10,368	$36,973	$24,973	2.08
Lighting	RI	INC 300 CEIL	MH 100 PEND	93	WHS	11510 Elect.	Elect.	$159,841	$415,254	$114,040	$36,738	$0	$490,557	$330,915	2.07
Lighting	RI	INC 300 CEIL	MH 100 PEND	61	R&D-2	1728 Elect.	Elect.	$21,893	$56,947	$15,639	-$5,312	$0	$67,274	$45,381	2.07
Motors	RI	fan, supply	Effic.-1	11	mef-7.5	738 Elect.	Elect.	$728	$1,884	(a)	$0	$496	$2,180	$1,452	1.99
Lighting	RI	INC 60 CEIL	CFL 11 CEIL FIXT	63	R&D-2	21200 Elect.	Elect.	$5,493	$8,317	$2,284	$5,141	$0	$15,742	$10,249	1.87
Lighting	RI	INC 2-60 WALL	CFL 2-11 CEIL FIXT	13	HSG-FAM	(411) Elect.	Elect.	$297,753	$390,061	$127,268	$305,396	$0	$822,725	$524,972	1.76
Motors	ROF	pump	Effic.-1	2	mp-5	734 Elect.	Elect.	$489	$944	(a)	$0	$389	$1,333	$845	1.73
Motors	ROF	pump	Effic.-1	5	mp-5	734 Elect.	Elect.	$489	$944	(a)	$0	$389	$1,333	$845	1.73
Motors	ROF	fan, exhaust	Effic.-1	6	mef-5	738 Elect.	Elect.	$489	$944	(a)	$0	$389	$1,333	$845	1.73
Motors	RI	fan, exhaust	Effic.-1	10	mef-5	715 Elect.	Elect.	$535	$1,346	(a)	$0	$106	$1,452	$917	1.72
Motors	RI	air shower	Effic.-1	2	mf-5	715 Elect.	Elect.	$535	$1,346	(a)	$0	$106	$1,452	$917	1.72
Lighting	RI	INC 2-60 CEIL	CFL 2-11 CEIL FIXT	12	HSG-FAM	(411) Elect.	Elect.	$918,935	$1,170,183	$381,803	$895,445	$0	$2,447,430	$1,528,495	1.66
Motors	RI	SYa Booster Pump	Effic.-1	5	mbp-60	Elect.	Elect.	$3,182	$8,940	(a)	$0	$1,530	$8,469	$5,287	1.66
Motors	RI	SYd Booster Pump	Effic.-1	4	mbp-60	Elect.	Elect.	$3,182	$8,940	(a)	$0	$1,530	$8,469	$5,287	1.66
Motors	ROF	Lift Station	Effic.-1	2	mlp-25	13630 Elect.	Elect.	$1,472	$2,400	(a)	$0	$1,239	$3,639	$2,168	1.47
Motors	ROF	pump	Effic.-1	19	mp-10	717 Elect.	Elect.	$790	$1,390	(a)	$0	$547	$1,937	$1,147	1.45
Motors	ROF	pump	Effic.-1	16	mp-10	717 Elect.	Elect.	$790	$1,390	(a)	$0	$547	$1,9[illegible]	$1,147	1.45
Transportation	RI	Maint, Tele-Utility, w/Cab	CNG Vehicle	4E+05	conversion	Truck Gas	NG	$100,000	$16,417	$0	$389,668	-$185,470	$220,616	$120,616	1.21
Lighting	RI	INC 500 PEND	MH 175 PEND	80	R&D-1	8310 Elect.	Elect.	$32,925	$46,527	$12,778	$13,266	$0	$72,571	$39,646	1.20
Space Heating	RI	Boiler	Economizer	1b	> 3MBtu/hr	Propane	Propane	$19,393	$38,216	$0	$0	$3,704	$41,920	$22,527	1.16
Space Heating	RI	Boiler	Blowdown	6a	> 6MBtu/hr	NG	NG	$39,900	$78,159	$0	$0	$7,621	$85,780	$45,880	1.15
Motors	ROF	Lift Station	Effic.-1	1	mlp-15	19456 Elect.	Elect.	$1,041	$1,370	(a)	$0	$848	$2,218	$1,177	1.13
Motors	RI	pump, hot water	Effic.-1	7	mhwp-15	719 Elect.	Elect.	$1,139	$2,350	(a)	$0	$72	$2,422	$1,283	1.13
Motors	RI	pump, hot water	Effic.-1	5	mhwp-15	719 Elect.	Elect.	$1,139	$2,350	(a)	$0	$72	$2,422	$1,283	1.13
Space Heating	RI	Boiler	Blowdown	6b	> 6MBtu/hr	Propane	Propane	$15,840	$30,573	$0	$0	$3,025	$33,598	$17,758	1.12
Transportation	RI	School, 42-45 pegr, 4x2	CNG Vehicle	8130	conversion	Bus Dies.	NG,Dies.	$39,000	-$4,533	$0	$104,391	-$17,356	$82,502	$43,502	1.12
Lighting	RI	FL 2X4 4-40 STD	FL 2X4 3-T8 ELC REF	40	PRDCTN	8337 Elect.	Elect.	$434	$599	$160	$147	$0	$907	$473	1.09
Space Heating	RI	Boiler	Economizer	1a	> 3MBtu/hr	NG	NG	$124,616	$235,420	$0	$0	$23,802	$259,222	$134,606	1.08
Transportation	RI	Compact, Law Enforcement, Class II	CNG Vehicle	8106	conversion	Sedan Gas	NG	$36,000	$167,558	$0	$62,628	-$156,587	$73,619	$37,619	1.04
Lighting	RI	FL 1X4 2-40 STD	FL 1X4 2-T8 ELC	29	PRDCTN	8337 Elect.	Elect.	$830	$998	$287	$402	$0	$1,688	$838	1.01
Lighting	RI	FL 1X8 4-96 STD	FL 1X8 3-96 ELC REF	19	MTRPOOL	10726 Elect.	Elect.	$34,091	$44,220	$12,144	$12,032	$0	$68,397	$34,306	1.01
Motors	RI	pump, chilled water	Effic.-2	13	mcwp-3	715 Elect.	Elect.	$340	$536	(a)	$0	$142	$678	$339	1.00
Motors	ROF	fan, exhaust	Effic.-1	11	mef-1	8401 Elect.	Elect.	$282	$315	(a)	$0	$240	$555	$273	0.97
Transportation	RI	Multistop, 4x2, 1-ton	CNG Vehicle	8180	conversion	Truck Dies.	NG,Dies.	$39,000	-$3,329	$0	$127,255	-$48,135	$75,790	$36,790	0.94
Transportation	RI	Hustler, 463L, 10K	CNG Vehicle	E956	conversion	Forklift Dies.	NG,Dies.	$6,000	-$87	$0	$16,878	-$5,184	$11,607	$5,607	0.93
Transportation	RI	2,000-5,999#, ST	CNG Vehicle	E830	conversion	Forklift Gas	NG	$2,000	$1,729	$0	$3,853	-$1,728	$3,854	$1,854	0.93
[illegible]	ROF	SV Booster Pump	Effic.-2	14	mbp-400	Elect.	Elect.	$14,358	$14,248	(a)	$0	$11,945	$26,193	$11,836	0.82
Transportation	RI	Tractor, 44x2, 24000-44500# GVW	CNG Vehicle	8352	conversion	Truck Gas	NG	$9,000	$132	$0	$25,396	-$9,254	$16,274	$7,274	0.81
Process	RI	Nitrogen Dist. System	Comp. Air	3		SLC-4		$786,000	$1,532,975	-$63,383	-$58,707	$0	$1,410,885	$624,884	0.80
Motors	ROF	pump, chilled water circ	Effic.-1	9	mcwp-10	719 Elect.	Elect.	$482	$468	(a)	$0	$390	$858	$376	0.78
Motors	ROF	pump, chilled water circ	Effic.-1	3	mcwp-10	719 Elect.	Elect.	$482	$468	(a)	$0	$390	$858	$376	0.78
Motors	ROF	pump, chilled water circ	Effic.-1	4	mcwp-10	719 Elect.	Elect.	$482	$468	(a)	$0	$390	$858	$376	0.78
Motors	ROF	pump, chilled water circ	Effic.-1	8	mcwp-10	719 Elect.	Elect.	$482	$468	(a)	$0	$390	$858	$376	0.78
Motors	ROF	pump, chilled water circ	Effic.-1	13	mpcw-10	719 Elect.	Elect.	$482	$468	(a)	$0	$390	$858	$376	0.78
Lighting	RI	FL 2X4 3-40 STD	FL 2X4 2-T8 ELC REF	85	R&D-2	1728 Elect.	Elect.	$214,650	$232,063	$63,731	$85,962	$0	$381,756	$167,106	0.78
Motors	ROF	SYa Booster Pump	Effic.-2	1	mbp-250	Elect.	Elect.	$6,664	$6,493	(a)	$0	$5,268	$11,761	$5,098	0.76

TABLE 4.5. (contd)

ERO Category	RI or ROF	Equipment	Description of ERO	ID	ID2	Exist. Facility Fuel	Result. Fuel	Present Value of Installed Cost (1992 $)	Present Value of Energy Savings (1992 $)	Present Value of Demand Savings (1992 $)	Present Value of O&M Savings (1992 $)	Present Value of Replace. Savings (1992 $)	Present Value of Total Savings (1992 $)	Net Present Value (1992 $)	Value Index
Motors	ROF	SYb Booster Pump	Effic.-2	2	mbp-250	Elect.	Elect.	$6,664	$6,493	(a)	$0	$5,268	$11,761	$5,098	0.76
Lighting	RI	FL 2X4 3-40 STD	FL 2X4 2-T8 ELC REF	21	MTRPOOL	10726 Elect.	Elect.	$9,766	$10,561	$2,900	$3,665	$0	$17,126	$7,358	0.75
Transportation	RI	Intercity, 41-51 pegr, 4x2	CNG Vehicle	B139	conversion	Bus Diee.	NG,Diee.	$6,000	-$187	$0	$13,045	-$2,670	$10,208	$4,208	0.70
Motors	ROF	fan, exhaust	Effic.-1	1	mef-2	715 Elect.	Elect.	$236	$222	(a)	$0	$177	$399	$163	0.69
Lighting	RI	FL 1X8 3-96 STD	FL 1X8 3-96 ELC	18	MTRPOOL	10726 Elect.	Elect.	$30,821	$30,910	$8,489	$12,261	$0	$51,659	$20,838	0.68
Motors	ROF	pump	Effic.-1	9	mp-1.5	717 Elect.	Elect.	$312	$299	(a)	$0	$223	$522	$210	0.67
Motors	ROF	pump	Effic.-1	4	mp-1.5	717 Elect.	Elect.	$312	$299	(a)	$0	$223	$522	$210	0.67
Lighting	RI	FL 2X4 4-40 STD	FL 2X4 3-T8 ELC REF	33	PRDCTN	8337 Elect.	Elect.	$8,683	$9,089	$2,496	$2,695	$0	$14,279	$5,596	0.64
Lighting	RI	FL 2X4 4-40 STD	FL 2X4 3-T8 ELC REF	38	PRDCTN	8337 Elect.	Elect.	$1,954	$2,045	$562	$606	$0	$3,213	$1,259	0.64
Transportation	RI	Modular, 4x4	CNG Vehicle	B163	conversion	Ambulance Gas	NG	$9,000	$2,081	$0	$23,677	-$11,108	$14,650	$5,650	0.63
Lighting	RI	FL 2X4 2-40 STD	FL 2X4 2-T8 ELC	3	ADMIN	11777 Elect.	Elect.	$226,289	$206,527	$56,718	$104,453	$0	$367,698	$141,429	0.63
Lighting	RI	FL 2X4 2-40 STD	FL 2X4 2-T8 ELC	20	MTRPOOL	10726 Elect.	Elect.	$2,429	$2,217	$609	$1,122	$0	$3,948	$1,519	0.63
Lighting	RI	FL 2X4 2-40 STD	FL 2X4 2-T8 ELC	63	R&D-2	1764 Elect.	Elect.	$54,709	$49,936	$13,714	$25,256	$0	$88,905	$34,196	0.63
Lighting	RI	FL 1X4 2-40 STD	FL 1X4 2-T8 ELC	26	PRDCTN	8337 Elect.	Elect.	$747	$682	$187	$345	$0	$1,214	$467	0.63
Lighting	RI	FL 2X4 2-40 STD	FL 2X4 2-T8 ELC	92	WHS	13221 Elect.	Elect.	$245,316	$223,912	$61,492	$113,246	$0	$398,650	$153,334	0.63
Lighting	RI	FL 1X4 2-40 STD	FL 1X4 2-T8 ELC	50	R&D-2	398 Elect.	Elect.	$43,433	$39,644	$10,887	$20,050	$0	$70,581	$27,148	0.63
Lighting	RI	FL 2X4 2-40 STD	FL 2X4 2-T8 ELC	10	COMCATN	1762 Elect.	Elect.	$90,415	$73,399	$20,157	$37,122	$0	$130,679	$50,263	0.63
Lighting	RI	FL 2X4 2-40 STD	FL 2X4 2-T8 ELC	87	SHOP	1785 Elect.	Elect.	$92,643	$84,560	$23,223	$42,767	$0	$150,550	$57,907	0.63
Lighting	RI	FL 1X4 2-40 STD	FL 1X4 2-T8 ELC	28	PRDCTN	8337 Elect.	Elect.	$996	$909	$250	$460	$0	$1,618	$622	0.63
Lighting	RI	FL 1X4 2-40 EEF	FL 1X4 2-T8 ELC	30	PRDCTN	8337 Elect.	Elect.	$166	$139	$37	$85	$0	$262	$96	0.58
Lighting	RI	INC 60 CEIL	CFL 11 CEIL FIXT	7	BRK/ADM	13140 Elect.	Elect.	$244,824	$178,300	$58,175	$145,921	$0	$382,396	$137,571	0.56
Lighting	RI	INC 60 CEIL	CFL 11 CEIL FIXT	16	HSG-FAM	(411) Elect.	Elect.	$401,695	$292,546	$95,451	$239,419	$0	$627,415	$225,720	0.56
Motors	ROF	fan, exhaust	Effic.-1	4	mef-2	738 Elect.	Elect.	$338	$3C[illegible]	(a)	$0	$225	$528	$188	0.56
Motors	ROF	fan, exhaust	Effic.-1	4	mef-1.5	715 Elect.	Elect.	$217	$165	(a)	$0	$172	$337	$119	0.55
Motors	ROF	fan, exhaust	Effic.-1	16	mef-1.5	715 Elect.	Elect.	$217	$165	(a)	$0	$172	$337	$119	0.55
Motors	ROF	fan, exhaust	Effic.-1	8	mef-1.5	715 Elect.	Elect.	$217	$165	(a)	$0	$172	$337	$119	0.55
Motors	ROF	fan, exhaust	Effic.-1	7	mef-1.5	715 Elect.	Elect.	$217	$165	(a)	$0	$172	$337	$119	0.55
Motors	ROF	pump, chiller recirc	Effic.-1	14	mcwp-1.5	715 Elect.	Elect.	$217	$165	(a)	$0	$172	$337	$119	0.55
Motors	ROF	fan, supply	Effic.-1	3	mef-1.5	715 Elect.	Elect.	$217	$165	(a)	$0	$172	$337	$119	0.55
Lighting	RI	FL 1X8 2-96 STD	FL 1X8 2-96 ELC	86	SHOP	1785 Elect.	Elect.	$134,319	$120,068	$32,974	$53,658	$0	$206,600	$72,282	0.54
Lighting	RI	FL 1X8 2-96 STD	FL 1X8 2-96 ELC	9	COMCATN	1762 Elect.	Elect.	$969,163	$866,329	$237,918	$386,442	$0	$1,490,689	$521,535	0.54
Lighting	RI	FL 1X8 2-96 STD	FL 1X8 2-96 ELC	91	WHS	11515 Elect.	Elect.	$224,073	$200,299	$55,008	$89,347	$0	$344,654	$120,581	0.54
Lighting	RI	FL 1X8 2-96 STD	FL 1X8 2-96 ELC	89	TRAING	14008 Elect.	Elect.	$201,919	$180,496	$49,569	$80,514	$0	$310,579	$108,660	0.54
Lighting	RI	FL 1X8 2-96 STD	FL 1X8 2-96 ELC	61	R&D-2	8310 Elect.	Elect.	$460,405	$411,557	$113,025	$183,583	$0	$708,164	$247,760	0.54
Lighting	RI	FL 1X8 2-96 STD	FL 1X8 2-96 ELC	17	MTRPOOL	10726 Elect.	Elect.	$13,355	$11,936	$3,279	$5,325	$0	$20,542	$7,187	0.54
Lighting	RI	FL 1X8 2-96 STD	FL 1X8 2-96 ELC	1	ADMIN	11777 Elect.	Elect.	$266,305	$238,051	$65,375	$106,187	$0	$409,613	$143,308	0.54
Motors	ROF	pump	Effic.-1	15	mp-1	717 Elect.	Elect.	$282	$188	(a)	$0	$240	$428	$146	0.52
Motors	ROF	pump	Effic.-1	12	mp-1	717 Elect.	Elect.	$282	$188	(a)	$0	$240	$428	$146	0.52
Transportation	ROF	Modular, 4x4, 4 liter	CNG Vehicle	B164	conversion	Ambulance Gas	NG	$2,742	$97	$0	$7,378	-$3,398	$4,077	$1,335	0.49
Lighting	RI	FL 2X4 4-40 EEF	FL 2X4 3-T8 ELC REF	43	PRDCTN	8337 Elect.	Elect.	$434	$381	$102	$157	$0	$640	$206	0.47
Lighting	RI	MERC 400 PEND	HPS 200 PEND	82	R&D-1	8310 Elect.	Elect.	$33,344	$34,178	$12,463	$1,600	$0	$48,239	$14,895	0.45
Lighting	RI	FL 2X4 3-34 STD	FL 2X4 2-T8 ELC REF	54	R&D-2	398 Elect.	Elect.	$328,545	$269,565	$73,755	$131,574	$0	$473,894	$145,349	0.44
Motors	ROF	SYc Booster Pump	Effic.-2	3	mbp-250	Elect.	Elect.	$6,664	$4,329	(a)	$0	$5,268	$9,597	$2,933	0.44
Motors	ROF	fan, exhaust	Effic.-1	10	mef-1.5	738 Elect.	Elect.	$312	$224	(a)	$0	$223	$447	$136	0.44
Motors	ROF	fan, exhaust	Effic.-1	7	mef-1.5	738 Elect.	Elect.	$312	$224	(a)	$0	$223	$447	$136	0.44
Motors	ROF	fan, exhaust	Effic.-1	5	mef-1.5	738 Elect.	Elect.	$312	$224	(a)	$0	$223	$447	$136	0.44
Lighting	RI	MERCURY VAPOR 400W CEIL	HPS 200 PEND	83	R&D-1	398 Elect.	Elect.	$2,964	$3,137	$862	$164	$0	$4,163	$1,199	0.40
Lighting	RI	MERC 175	HPS 100 PEND	23	MTRPOOL	10726 Elect.	Elect.	$13,065	$15,679	$4,306	-$2,832	$0	$17,152	$4,088	0.31
Lighting	RI	FL 1X4 2-40 EEF	FL 1X4 2-T8 ELC	31	PRDCTN	8337 Elect.	Elect.	$83	$53	$14	$40	$0	$107	$24	0.29
Lighting	RI	FL 1X4 2-40 EEF	FL 1X4 2-T8 ELC	27	PRDCTN	8337 Elect.	Elect.	$830	$528	$145	$399	$0	$1,072	$242	0.29
Lighting	RI	MERCURY VAPOR 400W WALL	HPS 200 WALL	84	R&D-1	398 Elect.	Elect.	$4,977	$4,706	$1,292	$248	$0	$6,245	$1,268	0.25
Lighting	RI	FL 2X4 2-34 STD	FL 2X4 2-34 ELC	62	R&D-2	8310 Elect.	Elect.	$21,103	$11,459	$3,147	$11,541	$0	$26,147	$5,043	0.24
Space Heating	RI	Insulation	Attic Insulation	1a		HSG-FAM NG	NG	$1,442,402	$1,491,827	$0	$0	$275,498	$1,767,324	$324,922	0.23
Motors	ROF	pump	Effic.-1	1	mp-1.5	717 Elect.	Elect.	$312	$149	(a)	$0	$223	$373	$61	0.20
Motors	ROF	pump	Effic.-1	13	mp-1.5	717 Elect.	Elect.	$312	$149	(a)	$0	$223	$373	$61	0.20
Motors	ROF	pump	Effic.-1	14	mp-1.5	717 Elect.	Elect.	$312	$149	(a)	$0	$223	$373	$61	0.20
Motors	ROF	pump	Effic.-1	7	mp-1.5	717 Elect.	Elect.	$312	$149	(a)	$0	$223	$373	$61	0.20
Transportation	ROF	2,000-5,999#, PT	CNG Vehicle	E831	conversion	Forklift Gas	NG	$3,658	$297	$0	$7,203	-$3,146	$4,354	$699	0.19
Lighting	RI	INC 300 CEIL	MH 100 PEND	78	R&D-1	1728 Elect.	Elect.	$20,272	$17,577	$4,827	$1,428	$0	$23,832	$3,560	0.18
Lighting	RI	FL 2X4 4-40 EEF	FL 2X4 3-T8 ELC REF	41	PRDCTN	8337 Elect.	Elect.	$18,452	$12,291	$3,375	$6,013	$0	$21,679	$3,227	0.17
Lighting	RI	FL 2X4 4-40 EEF	FL 2X4 3-T8 ELC REF	42	PRDCTN	8337 Elect.	Elect.	$1,085	$723	$199	$354	$0	$1,275	$190	0.17

TABLE 4.5. (contd)

ERO Category	RI or ROF	Equipment	Description of ERO	ID	ID2	Exist. Facility Fuel	Result. Fuel	Present Value of Installed Cost (1992 $)	Present Value of Energy Savings (1992 $)	Present Value of Demand Savings (1992 $)	Present Value of O&M Savings (1992 $)	Present Value of Replace. Savings (1992 $)	Present Value of Total Savings (1992 $)	Net Present Value (1992 $)	Value Index
Lighting	RI	FL 2X4 4-40 EEF	FL 2X4 3-T8 ELC REF	35	PRDCTN	8337 Elect.	Elect.	$1,302	$868	$238	$424	$0	$1,530	$228	0.17
Lighting	RI	INC 60 CEIL	CFL 11 CEIL FIXT	81	R&D-1	21200 Elect.	Elect.	$5,058	$2,567	$705	$2,550	$0	$5,822	$738	0.14
Trans. & Dist.	ROF	< = 1000 KVA Transformers	Amorphous Core			Elect.	Elect.	$4,991,438	$1,206,707	$159,798	$0	$4,330,661	$5,697,164	$705,726	0.14
Process	RI	Hydrazine Incinerators	Bubble Cap Scrubbers			SLC-4		$844,400	$167,903	(a)	$648,713	$97,189	$913,805	$69,405	0.08
Lighting	RI	FL 2X4 4-40 STD	FL 2X4 4-T8 ELC	34	PRDCTN	8337 Elect.	Elect.	$1,871	$875	$886	$226	$0	$1,987	$116	0.06
Lighting	RI	FL 2X4 4-40 STD	FL 2X4 4-T8 ELC	37	PRDCTN	8337 Elect.	Elect.	$134	$62	$63	$16	$0	$142	$8	0.06
Lighting	RI	INC 60 CAN	FL 11 CAN	15	HSG-FAM	(411) Elect.	Elect.	$168,134	$97,515	$31,817	$48,979	$0	$178,311	$10,177	0.06
Motors	ROF	SY6 Well Pump	Effic.-2	3	wp-75	Elect.	Elect.	$1,953	$2	(a)	$0	$2,037	$2,039	$86	0.04
Trans. & Dist.	ROF	> 1000 KVA Transformers	Impvd St Steel Core			Elect.	Elect.	$1,736,127	$268,383	$35,540	$0	$1,403,683	$1,767,606	$31,479	0.02
Totals								$18,346,373	$24,458,892	$7,081,085	$8,950,165	$5,221,154	$45,711,296	$27,364,921	

Notes:

(a) Demand has not been considered due to uncertainty about contribution to monthly peak.
(b) SVPP O&M savings consists of $560,288 credit from sale of emissions permits, less $619,602 increased O&M.
SVPP reported values are for 1994. Generation will decline over time. See Appendix A. Net Electricity generation with increased natural gas use.
While the analysis for the Volume 3: Resource Assessment used a 4.6% discount rate, the SVPP analysis (PNL-8556) used a 4.0% discount rate.
(c) This option has no installed cost. Therefore, no value index can be calculated.

TABLE 4.6. Annualized LCC Results: EROs Constituting the Minimum Life-Cycle Cost Efficiency Resource

ERO Category	RI or ROF	Equipment	Description of ERO	ID	ID2	Exist. Facility Fuel	Result. Fuel	Annualized Installed Cost (1992 $)	Annualized Energy Savings (1992 $)	Annualized Demand Savings (1992 $)	Annualized O&M Savings (1992 $)	Annualized Replace. Savings (1992 $)	Annualized Total Savings (1992 $)	Annualized Net Savings (1992 $)
SVPP (b)		SVPP	Peak-Shave at SVPP			SVPP Elect.	NG	$0	$400,108	$332,913	-$4,041	$0	$728,977	$728,977
Motors	RI	fan, supply, tunnel	Effic.-1		3 msf-50	720 Elect.	Elect.	$184	$4,708	$657	$0	$131	$5,484	$5,310
Space Heating	RI	Boiler	Dampers		3b all sizes	Propane	Propane	$212	$5,792	$0	$0	$40	$5,832	$5,620
Space Heating	RI	Boiler	Dampers		3a all sizes	NG	NG	$1,605	$38,154	$0	$0	$287	$38,442	$36,837
Motors	RI	SA5 Well Pump	Effic.-1		5 wp-75	Elect.	Elect.	$299	$6,938	(a)	$0	$121	$7,059	$6,760
Motors	RI	fan, exhaust	Effic.-1		6 mef-15	8401 Elect.	Elect.	$78	$1,299	$181	$0	$54	$1,534	$1,457
Transportation	RI	Cargo 4 Dr 4x2, 17,000-20999# GVW	CNG Vehicle		B256 conversion	Truck Gas	NG	$409	$107	$0	$7,481	-$420	$7,168	$6,759
Motors	RI	Sewage Station	2-SPD		8 msp-7.5	743 Elect.	Elect.	$77	$1,232	$34	$0	$7	$1,273	$1,196
Motors	RI	Sewage Station	2-SPD		7 msp-7.5	743 Elect.	Elect.	$77	$1,232	$34	$0	$7	$1,273	$1,196
Motors	RI	fan, supply tunnel 3	Effic.-1		12 mf-10	730 Elect.	Elect.	$59	$822	$115	$0	$36	$971	$912
Transportation	RI	4 dr cab, 4x4, 7,000-8510 GVW	CNG Vehicle		B222 conversion	Pickup Gas	NG	$4,906	$72,610	$0	$9,122	-$6,055	$76,677	$70,771
Motors	RI	fan, exhaust	Effic.-1		2 mef-7.5	8401 Elect.	Elect.	$50	$621	$87	$0	$34	$741	$691
Lighting	RI	INC 150 CEIL	CFL 27 INTEGRAL UNIT		22 MTRPOOL	10726 Elect.	Elect.	$60	$657	$180	$43	$0	$880	$820
Motors	RI	pump, chilled water	Effic.-1		6 mcwp-15	730 Elect.	Elect.	$78	$1,077	(a)	$0	$54	$1,131	$1,054
Motors	RI	fan, exhaust	Effic.-1		5 mef-15	730 Elect.	Elect.	$78	$1,077	(a)	$0	$54	$1,131	$1,054
Motors	RI	pump, air wash	Effic.-1		8 mp-15	730 Elect.	Elect.	$78	$1,077	(a)	$0	$54	$1,131	$1,054
Motors	RI	SA4 Well Pump	Effic.-1		4 wp-60	Elect.	Elect.	$217	$2,958	(a)	$0	$148	$3,106	$2,889
Motors	RI	SA7 Well Pump	Effic.-1		7 wp-75	Elect.	Elect.	$299	$3,818	(a)	$0	$121	$3,940	$3,640
Motors	RI	fan, exhaust	Effic.-1		3 mef-5	8401 Elect.	Elect.	$36	$372	$52	$0	$25	$449	$412
Motors	RI	fan, evaporative condensor	Effic.-1		16 mcf-10	730 Elect.	Elect.	$69	$681	(a)	$0	$35	$716	$647
Motors	RI	SA6 Well Pump	Effic.-1		6 wp-75	Elect.	Elect.	$299	$3,472	(a)	$0	$121	$3,593	$3,294
Motors	RI	Sewage Station	2-SPD		1 msp-5	393 Elect.	Elect.	$56	$646	-$0	$0	$10	$656	$600
Motors	RI	Sewage Station	2-SPD		2 msp-5	393 Elect.	Elect.	$56	$646	-$0	$0	$10	$656	$600
Motors	RI	fan, launch control rm	Effic.-1		17 mf-7.5	730 Elect.	Elect.	$50	$515	(a)	$0	$34	$548	$499
Motors	RI	condensor pump	Effic.-1		5 mcp-40	8401 Elect.	Elect.	$157	$1,545	(a)	$0	$95	$1,640	$1,483
Motors	RI	condensor pump	Effic.-1		1 mcp-25	8401 Elect.	Elect.	$110	$937	(a)	$0	$79	$1,016	$907
Motors	RI	fan, booster landlines rm	Effic.-1		18 mbf-5	730 Elect.	Elect.	$36	$308	(a)	$0	$25	$333	$297
Motors	RI	fan, vehicle recorder rm	Effic.-1		4 mf-5	730 Elect.	Elect.	$36	$308	(a)	$0	$25	$333	$297
Motors	RI	fan, control rm 103	Effic.-1		8 mf-5	730 Elect.	Elect.	$36	$308	(a)	$0	$25	$333	$297
Lighting	RI	INC 150 WALL	CFL 27 INTEGRAL UNIT		47 PRDCTN	8337 Elect.	Elect.	$2	$7	$7	$1	$0	$15	$14
Transportation	RI	Tractor, Missile/Lox, 6x4, 2400-44500# GVW	CNG Vehicle		B364 conversion	Truck Gas	NG	$409	$9	$0	$3,896	-$420	$3,485	$3,076
Motors	RI	SAh Booster Pump	Effic.-1		13 mbp-150	Elect.	Elect.	$548	$4,210	(a)	$0	$408	$4,618	$4,070
Motors	RI	SAf Booster Pump	Effic.-1		11 mbp-150	Elect.	Elect.	$548	$4,210	(a)	$0	$408	$4,618	$4,070
Motors	RI	SAe Booster Pump	Effic.-1		10 mbp-150	Elect.	Elect.	$548	$4,210	(a)	$0	$408	$4,618	$4,070
Motors	RI	SAg Booster Pump	Effic.-1		12 mbp-150	Elect.	Elect.	$548	$4,210	(a)	$0	$408	$4,618	$4,070
Transportation	RI	Tractor, 6x4, 24,000-44,500 GVW	CNG Vehicle		B381 conversion	Truck Dies.	NG,Dies.	$3,475	-$69	$0	$32,335	-$3,573	$28,693	$25,218
Motors	RI	fan	Effic.-1		8 mf-20	8401 Elect.	Elect.	$96	$733	(a)	$0	$69	$801	$703
Motors	RI	fan	Effic.-1		4 mf-20	8401 Elect.	Elect.	$96	$733	(a)	$0	$69	$801	$703
Motors	RI	air handler	Effic.-1		4 msf-20	945 Elect.	Elect.	$98	$733	(a)	$0	$48	$781	$683
Motors	RI	Sewage Station	2-SPD		10 msp-3	896 Elect.	Elect.	$48	$357	-$6	$0	$16	$367	$319
Motors	RI	Sewage Station	2-SPD		11 msp-3	896 Elect.	Elect.	$48	$357	-$6	$0	$16	$367	$319
Motors	RI	Sewage Station	2-SPD		16 msp-3	23260 Elect.	Elect.	$48	$357	-$6	$0	$16	$367	$319
Motors	RI	Sewage Station	2-SPD		15 msp-3	23260 Elect.	Elect.	$48	$357	-$6	$0	$16	$367	$319
Motors	RI	Sewage Station	2-SPD		9 msp-3	769 Elect.	Elect.	$48	$357	-$6	$0	$16	$367	$319
Motors	RI	pump, cooling tower	Effic.-1		10 mct-15	8401 Elect.	Elect.	$78	$535	(a)	$0	$54	$590	$512
Motors	RI	Sewage Station	2-SPD		3 msp-3	488 Elect.	Elect.	$48	$357	-$6	$0	-$1	$350	$302
Motors	RI	Sewage Station	2-SPD		4 msp-3	488 Elect.	Elect.	$48	$357	-$6	$0	-$1	$350	$302
Process	RI	Electric Steam Boilers	Pneum. Humid. w/ Bypas		2	SLC-4E		$6,841	$37,495	(a)	$3,200	$6,386	$47,081	$40,241
Water Heating	RI	Water Heater	Low Flow SH		8a Residential	HSG-FAM NG	NG	$2,607	$20,033	$0	$0	-$2,252	$17,781	$15,174
Motors	RI	fan, exhaust	Effic.-1		1 mef-60	719 Elect.	Elect.	$217	$1,417	(a)	$0	$12	$1,429	$1,212
Motors	RI	fan	Effic.-1		6 mf-40	717 Elect.	Elect.	$157	$924	(a)	$0	$95	$1,019	$862
Motors	RI	fan	Effic.-1		2 mf-40	717 Elect.	Elect.	$157	$924	(a)	$0	$95	$1,019	$862
Motors	RI	fan	Effic.-1		17 mf-40	717 Elect.	Elect.	$157	$924	(a)	$0	$95	$1,019	$862
Motors	RI	fan	Effic.-1		6 mf-40	717 Elect.	Elect.	$157	$924	(a)	$0	$95	$1,019	$862
Motors	RI	fan, supply	Effic.-2		15 msf-3	730 Elect.	Elect.	$23	$123	(a)	$0	$25	$148	$125
Motors	RI	pump, water circ	Effic.-1		7 mcwp-10	8401 Elect.	Elect.	$59	$339	(a)	$0	$35	$373	$314
Lighting	RI	INC 500 PEND	MH 175 PEND		62 R&D-2	8310 Elect.	Elect.	$2,423	$10,271	$2,821	$1,991	$0	$15,082	$12,660

TABLE 4.6. (contd)

ERO Category	RI or ROF	Equipment	Description of ERO	ID	ID2	Exist. Facility	Fuel	Result. Fuel	Annualized Installed Cost (1992 $)	Annualized Energy Savings (1992 $)	Annualized Demand Savings (1992 $)	Annualized O&M Savings (1992 $)	Annualized Replace. Savings (1992 $)	Annualized Total Savings (1992 $)	Annualized Net Savings (1992 $)
Transportation	RI	Utility, 4x4, 6,000 GVW	CNG Vehicle	B198	conversion	Truck	Gas	NG	$8,789	$22,571	$0	$38,166	-$9,038	$51,699	$42,909
Motors	RI	Sewage Station	2-SPD	14	msp-2	21150	Elect.	Elect.	$38	$222	-$7	$0	$9	$224	$186
Transportation	RI	School, 28-29 pegr, 4x2	CNG Vehicle	B121	conversion	Bus	Dies.	NG,Dies.	$613	-$52	$0	$3,900	-$273	$3,575	$2,962
Motors	RI	Sewage Station	2-SPD	6	msp-2	743	Elect.	Elect.	$38	$222	-$7	$0	$2	$217	$178
Motors	RI	SY5 Well Pump	Effic.-1	2	wp-80		Elect.	Elect.	$217	$1,084	(a)	$0	$104	$1,188	$971
Lighting	RI	EXIT - INC (2X15)	EXIT - LED	24	MTRPOOL	10728	Elect.	Elect.	$388	$342	$49	$1,700	$0	$2,091	$1,703
Lighting	RI	EXIT - INC (2X15)	EXIT - LED	8	BRK/ADM	13140	Elect.	Elect.	$3,348	$2,952	$424	$14,888	$0	$18,064	$14,716
Lighting	RI	EXIT - INC (2X15)	EXIT - LED	94	WHS	11510	Elect.	Elect.	$4,369	$3,851	$554	$19,165	$0	$23,571	$19,201
Lighting	RI	EXIT - INC (2X15)	EXIT - LED	4	ADMIN	11777	Elect.	Elect.	$4,527	$3,991	$574	$19,858	$0	$24,423	$19,895
Lighting	RI	EXIT - INC (2X15)	EXIT - LED	25	PRDCTN	8337	Elect.	Elect.	$290	$256	$37	$1,274	$0	$1,567	$1,276
Lighting	RI	EXIT - INC (2X15)	EXIT - LED	67	R&D-2	398	Elect.	Elect.	$5,823	$5,133	$738	$25,543	$0	$31,414	$25,591
Lighting	RI	EXIT - INC (2X15)	EXIT - LED	96	WHS	11136	Elect.	Elect.	$36	$31	$5	$157	$0	$193	$157
Lighting	RI	EXIT - INC (2X15)	EXIT - LED	90	TRAING	14008	Elect.	Elect.	$1,246	$1,098	$158	$5,463	$0	$6,719	$5,474
Lighting	RI	EXIT - INC (2X15)	EXIT - LED	88	SHOP	1785	Elect.	Elect.	$1,287	$1,134	$163	$5,644	$0	$6,941	$5,655
Lighting	RI	EXIT - INC (2X15)	EXIT - LED	11	COMCATN	1782	Elect.	Elect.	$2,250	$1,983	$285	$9,869	$0	$12,137	$9,887
Motors	RI	SY3 Well Pump	Effic.-2	1	wp-75		Elect.	Elect.	$182	$869	(a)	$0	$107	$976	$794
Motors	RI	fan, supply	Effic.-1	6	msf-25	715	Elect.	Elect.	$110	$560	(a)	$0	$24	$585	$475
Motors	RI	fan	Effic.-2	11	mf-75	717	Elect.	Elect.	$182	$806	(a)	$0	$165	$971	$789
Motors	RI	fan	Effic.-2	18	mf-75	717	Elect.	Elect.	$182	$806	(a)	$0	$165	$971	$789
Motors	RI	fan	Effic.-2	10	mf-75	717	Elect.	Elect.	$182	$806	(a)	$0	$165	$971	$789
Motors	RI	fan	Effic.-2	20	mf-75	717	Elect.	Elect.	$182	$806	(a)	$0	$165	$971	$789
Lighting	RI	EXIT - INC (2X15)	EXIT - LED	85	R&D-1	398	Elect.	Elect.	$5,392	$4,753	$228	$23,852	$0	$28,833	$23,241
Transportation	RI	Platform, 40K, 463L	CNG Vehicle	E940	conversion	Lift	Dies.	NG,Dies.	$273	$0	$0	$1,778	-$336	$1,441	$1,169
Motors	RI	fan, launch control racks	Effic.-1	14	mf-5	730	Elect.	Elect.	$36	$160	(a)	$0	$25	$185	$149
Motors	RI	fan, rack supply	Effic.-1	2	mf-5	730	Elect.	Elect.	$36	$160	(a)	$0	$25	$185	$149
Transportation	RI	Stake, 4x2, 7000-9999# GVW	CNG Vehicle	B261	conversion	Truck	Gas	NG	$6,950	$26,969	$0	$15,421	-$7,146	$35,244	$28,294
Motors	RI	SAd Booster Pump	Effic.-1	8	mbp-100		Elect.	Elect.	$326	$1,410	(a)	$0	$238	$1,648	$1,321
Motors	RI	SAb Booster Pump	Effic.-1	7	mbp-100		Elect.	Elect.	$326	$1,410	(a)	$0	$238	$1,648	$1,321
Motors	RI	SAa Booster Pump	Effic.-1	6	mbp-100		Elect.	Elect.	$326	$1,410	(a)	$0	$238	$1,648	$1,321
Motors	RI	SAc Booster Pump	Effic.-1	8	mbp-100		Elect.	Elect.	$326	$1,410	(a)	$0	$238	$1,648	$1,321
Motors	RI	fan	Effic.-1	6	mf-40	734	Elect.	Elect.	$157	$693	(a)	$0	$95	$788	$631
Motors	RI	fan	Effic.-1	4	mf-40	734	Elect.	Elect.	$157	$693	(a)	$0	$95	$788	$631
Motors	RI	fan	Effic.-1	3	mf-40	734	Elect.	Elect.	$157	$693	(a)	$0	$95	$788	$631
Motors	RI	fan	Effic.-1	1	mf-40	734	Elect.	Elect.	$157	$693	(a)	$0	$95	$788	$631
Lighting	RI	INC 100 CEIL	CFL 27 INTEGRAL UNIT	46	PRDCTN	8337	Elect.	Elect.	$2	$4	$4	$0	$0	$9	$7
Motors	RI	air handler	Effic.-1	3	msf-2	945	Elect.	Elect.	$25	$114	(a)	$0	$10	$124	$98
Transportation	RI	Carryall, 4x2, Conv, 9 pegr	CNG Vehicle	B191	conversion	Truck	Dies.	NG,Dies.	$1,431	-$226	$0	$8,908	-$1,768	$6,914	$5,483
Motors	RI	pump	Effic.-1	2	mp-1.5	945	Elect.	Elect.	$23	$88	$12	$0	$10	$110	$87
Motors	RI	Sewage Station	2-SPD	12	msp-1.5	898	Elect.	Elect.	$36	$159	-$7	$0	$10	$162	$127
Motors	RI	pump, chilled water circ	Effic.-2	2	mcwp-75	719	Elect.	Elect.	$182	$806	(a)	$0	$27	$833	$651
Motors	RI	pump, chilled water circ	Effic.-2	6	mcwp-75	719	Elect.	Elect.	$182	$806	(a)	$0	$27	$833	$651
Motors	RI	fan, supply	Effic.-1	3	msf-25	738	Elect.	Elect.	$110	$420	(a)	$0	$79	$500	$390
Motors	RI	fan, control rm 102	Effic.-1	11	mf-2	730	Elect.	Elect.	$25	$98	(a)	$0	$14	$113	$87
Motors	RI	fan, control rm 101	Effic.-1	7	mf-2	730	Elect.	Elect.	$25	$98	(a)	$0	$14	$113	$87
Motors	RI	fan, supply	Effic.-2	10	msf-300	719	Elect.	Elect.	$806	$3,399	(a)	$0	$109	$3,508	$2,702
Motors	RI	fan, booster	Effic.-2	11	mbf-300	719	Elect.	Elect.	$806	$3,399	(a)	$0	$109	$3,508	$2,702
Motors	RI	fan, booster	Effic.-2	12	mbf-300	719	Elect.	Elect.	$806	$3,399	(a)	$0	$109	$3,508	$2,702
Motors	RI	fan, supply	Effic.-1	18	msf-15	715	Elect.	Elect.	$78	$320	(a)	$0	$16	$336	$259
Motors	RI	pump, condenser	Effic.-1	11	mcp-15	715	Elect.	Elect.	$78	$320	(a)	$0	$16	$336	$259
Motors	RI	fan, supply	Effic.-1	17	msf-15	715	Elect.	Elect.	$78	$320	(a)	$0	$16	$336	$259
Space Heating	RI	Weatherization	Weatherization Pkg.	3a		HSG-FAM	NG	NG	$5,344	$23,141	$0	$0	$0	$23,141	$17,797
Lighting	RI	MERC 400 PEND	HPS 200 PEND	64	R&D-2	8310	Elect.	Elect.	$2,454	$7,544	$2,751	-$405	$0	$9,890	$7,436
Lighting	RI	MERCURY VAPOR 400W CEIL	HPS 200 PEND	65	R&D-2	398	Elect.	Elect.	$218	$693	$190	-$48	$0	$835	$617
Motors	RI	fan, supply	Effic.-1	1	msf-15	738	Elect.	Elect.	$78	$240	(a)	$0	$54	$294	$217
Motors	RI	Sewage Station	2-SPD	5	msp-1.33	535	Elect.	Elect.	$38	$141	-$6	$0	$9	$144	$106
Motors	RI	heat exchanger and pump	Effic.-1	1	mp-1.5	730	Elect.	Elect.	$23	$73	(a)	$0	$14	$87	$64
Motors	RI	heat exchanger and pump	Effic.-1	10	mp-1.5	730	Elect.	Elect.	$23	$73	(a)	$0	$14	$87	$64

TABLE 4.6. (contd)

ERO Category	RI or ROF	Equipment	Description of ERO	ID	ID2	Exist. Facility Fuel	Result. Fuel	Annualized Installed Cost (1992 $)	Annualized Energy Savings (1992 $)	Annualized Demand Savings (1992 $)	Annualized O&M Savings (1992 $)	Annualized Replace. Savings (1992 $)	Annualized Total Savings (1992 $)	Annualized Net Savings (1992 $)
Motors	RI	pump, evaporative condensor	Effic.-1	13	mcp-1.5	730 Elect.	Elect.	$23	$73	(a)	$0	$14	$87	$64
Motors	RI	fan, cooling tower	Effic.-2	8	mctf-3	8401 Elect.	Elect.	$23	$81	(a)	$0	$25	$86	$63
Motors	RI	SV3 Well Pump	Effic.-1	9	wp-100	Elect.	Elect.	$326	$976	(a)	$0	$238	$1,213	$887
Transportation	RI	Carryall, 4x4, 7,500 GVW	CNG Vehicle	B190	conversion	Truck Gas	NG	$409	$348	$0	$1,582	-$420	$1,510	$1,101
Motors	RI	fan, supply	Effic.-1	9	mef-10	716 Elect.	Elect.	$59	$203	(a)	$0	$9	$211	$152
Motors	RI	fan, exhaust	Effic.-1	12	mef-10	716 Elect.	Elect.	$59	$203	(a)	$0	$9	$211	$152
Motors	RI	pump, hot water circ	Effic.-1	1	mhwp-1	846 Elect.	Elect.	$21	$56	$8	$0	$11	$74	$53
Motors	RI	SV1 Well Pump	Effic.-1	8	wp-100	Elect.	Elect.	$326	$898	(a)	$0	$238	$1,136	$810
Water Heating	ROF	Water Heater	R-11 Tank Wrap	6b	Residential	HSG-FAM NG	NG	$6,268	$25,735	$0	$0	-$4,192	$21,553	$15,285
Water Heating	ROF	Water Heater	R-11 Tank Wrap	7b	Commercial	ADMIN;R/D NG	NG	$788	$3,238	$0	$0	-$528	$2,710	$1,922
Lighting	RI	MERCURY VAPOR 400W WALL	HPS 200 WALL	66	R&D-2	398 Elect.	Elect.	$366	$1,039	$285	-$71	$0	$1,253	$887
Lighting	RI	FL 2X4 4-40 STD	FL 2X4 3-T8 ELC REF	39	PRDCTN	8337 Elect.	Elect.	$15	$38	$5	$6	$0	$50	$35
Motors	RI	pump, air washer	Effic.-1	15	mf-7.5	716 Elect.	Elect.	$50	$153	(a)	$0	$10	$163	$113
Motors	RI	fan, supply	Effic.-1	5	msf-7.5	716 Elect.	Elect.	$50	$153	(a)	$0	$10	$163	$113
Motors	RI	Sewage Station	2-SPD	13	msp-1	1801 Elect.	Elect.	$32	$101	-$6	$0	$7	$103	$71
Motors	RI	pump	Effic.-1	5	mp-5	717 Elect.	Elect.	$36	$92	(a)	$0	$25	$117	$80
Motors	RI	pump	Effic.-1	3	mp-5	717 Elect.	Elect.	$36	$92	(a)	$0	$25	$117	$80
Transportation	RI	4 dr cab, 4x2, 5,500 GVW	CNG Vehicle	B217	conversion	Pickup Gas	NG	$15,126	$42,277	$0	$24,733	-$18,669	$48,341	$33,215
Process	RI	Steam Boilers	Pneumatic Humidifiers	1		SLC-4E		$8,517	$3,903	(a)	$21,400	$1,883	$27,185	$18,668
Motors	RI	fan, evaporative condensor	Effic.-1	2	mcf-10	738 Elect.	Elect.	$59	$152	(a)	$0	$35	$186	$128
Motors	RI	fan, supply	Effic.-1	9	msf-10	738 Elect.	Elect.	$59	$152	(a)	$0	$35	$186	$128
Motors	RI	fan, supply	Effic.-1	8	msf-10	738 Elect.	Elect.	$59	$152	(a)	$0	$35	$186	$128
Lighting	RI	INC 4-60 CEIL	CFL 4-11 CEIL	14	HSG-FAM	(411) Elect.	Elect.	$12,522	$26,577	$8,671	$3,671	$0	$38,919	$26,397
Transportation	RI	6,000-9,999#, PT	CNG Vehicle	E832	conversion	Forklift Gas	NG	$818	$259	$0	$2,967	-$706	$2,519	$1,702
Lighting	RI	INC 300 CEIL	MH 100 PEND	93	WHS	11510 Elect.	Elect.	$10,877	$28,293	$7,770	-$2,639	$0	$33,424	$22,547
Lighting	RI	INC 300 CEIL	MH 100 PEND	61	R&D-2	1728 Elect.	Elect.	$1,492	$3,880	$1,066	-$362	$0	$4,584	$3,092
Motors	RI	fan, supply	Effic.-1	11	msf-7.5	738 Elect.	Elect.	$50	$115	(a)	$0	$34	$149	$99
Lighting	RI	INC 60 CEIL	CFL 11 CEIL FIXT	63	R&D-2	21200 Elect.	Elect.	$374	$567	$156	$350	$0	$1,073	$698
Lighting	RI	INC 2-60 WALL	CFL 2-11 CEIL FIXT	13	HSG-FAM	(411) Elect.	Elect.	$20,287	$26,577	$8,671	$20,808	$0	$56,056	$35,769
Motors	ROF	pump	Effic.-1	2	mp-5	734 Elect.	Elect.	$33	$84	(a)	$0	$27	$91	$58
Motors	ROF	pump	Effic.-1	5	mp-5	734 Elect.	Elect.	$33	$84	(a)	$0	$27	$91	$58
Motors	ROF	fan, exhaust	Effic.-1	6	mef-5	738 Elect.	Elect.	$33	$84	(a)	$0	$27	$91	$58
Motors	RI	fan, exhaust	Effic.-1	10	mef-5	716 Elect.	Elect.	$36	$92	(a)	$0	$7	$99	$63
Motors	RI	air shower	Effic.-1	2	mf-5	716 Elect.	Elect.	$36	$92	(a)	$0	$7	$99	$63
Lighting	RI	INC 2-60 CEIL	CFL 2-11 CEIL FIXT	12	HSG-FAM	(411) Elect.	Elect.	$62,612	$79,730	$26,014	$61,011	$0	$166,755	$104,144
Motors	RI	SYe Booster Pump	Effic.-1	5	mbp-60	Elect.	Elect.	$217	$473	(a)	$0	$104	$577	$360
Motors	RI	SYd Booster Pump	Effic.-1	4	mbp-60	Elect.	Elect.	$217	$473	(a)	$0	$104	$577	$360
Motors	ROF	Lift Station	Effic.-1	2	mlp-25	13630 Elect.	Elect.	$100	$164	(a)	$0	$84	$248	$148
Motors	ROF	pump	Effic.-1	19	mp-10	717 Elect.	Elect.	$54	$95	(a)	$0	$37	$132	$78
Motors	ROF	pump	Effic.-1	16	mp-10	717 Elect.	Elect.	$54	$95	(a)	$0	$37	$132	$78
Transportation	RI	Maint, Tele-Utility, w/Cab	CNG Vehicle	*****	conversion	Truck Gas	NG	$6,813	$1,119	$0	$26,550	-$12,637	$15,032	$8,218
Lighting	RI	INC 500 PEND	MH 175 PEND	80	R&D-1	8310 Elect.	Elect.	$2,243	$3,170	$871	$904	$0	$4,945	$2,701
Space Heating	RI	Boiler	Economizer	1b	>3MBtu/hr	Propane	Propane	$1,321	$2,604	$0	$0	$252	$2,856	$1,535
Space Heating	RI	Boiler	Blowdown	6a	>6MBtu/hr	NG	NG	$2,719	$5,325	$0	$0	$519	$5,845	$3,126
Motors	ROF	Lift Station	Effic.-1	1	mlp-15	19456 Elect.	Elect.	$71	$93	(a)	$0	$58	$151	$80
Motors	RI	pump, hot water	Effic.-1	7	mhwp-15	719 Elect.	Elect.	$78	$160	(a)	$0	$5	$165	$87
Motors	RI	pump, hot water	Effic.-1	5	mhwp-15	719 Elect.	Elect.	$78	$160	(a)	$0	$5	$165	$87
Space Heating	RI	Boiler	Blowdown	6b	>6MBtu/hr	Propane	Propane	$1,079	$2,083	$0	$0	$206	$2,289	$1,210
Transportation	RI	School, 42-45 psgr, 4x2	CNG Vehicle	B130	conversion	Bus Dies.	NG,Dies.	$2,657	-$309	$0	$7,113	-$1,183	$5,621	$2,964
Lighting	RI	FL 2X4 4-40 STD	FL 2X4 3-T8 ELC REF	40	PRDCTN	8337 Elect.	Elect.	$30	$41	$11	$10	$0	$62	$32
Space Heating	RI	Boiler	Economizer	1a	>3MBtu/hr	NG	NG	$8,491	$16,040	$0	$0	$1,622	$17,662	$9,171
Transportation	RI	Compact, Law Enforcement, Class II	CNG Vehicle	B106	conversion	Sedan Gas	NG	$2,453	$11,417	$0	$4,287	-$10,668	$5,016	$2,563
Lighting	RI	FL 1X4 2-40 STD	FL 1X4 2-T8 ELC	29	PRDCTN	8337 Elect.	Elect.	$67	$68	$18	$27	$0	$114	$67
Lighting	RI	FL 1X8 4-96 STD	FL 1X8 3-96 ELC REF	19	MTRPOOL	10728 Elect.	Elect.	$2,323	$3,013	$827	$820	$0	$4,660	$2,337
Motors	RI	pump, chilled water	Effic.-2	13	mcwp-3	716 Elect.	Elect.	$23	$37	(a)	$0	$10	$46	$23
Motors	ROF	fan, exhaust	Effic.-1	11	mef-1	8401 Elect.	Elect.	$19	$21	(a)	$0	$18	$38	$19
Transportation	RI	Multistop, 4x2, 1-ton	CNG Vehicle	B180	conversion	Truck Dies.	NG,Dies.	$2,657	-$227	$0	$8,671	-$3,280	$5,164	$2,507

TABLE 4.6. (contd)

ERO Category	RI or ROF	Equipment	Description of ERO	ID	ID2	Exist. Facility	Fuel	Result. Fuel	Annualized Installed Cost (1992 $)	Annualized Energy Savings (1992 $)	Annualized Demand Savings (1992 $)	Annualized O&M Savings (1992 $)	Annualized Replace. Savings (1992 $)	Annualized Total Savings (1992 $)	Annualized Net Savings (1992 $)
Transportation	RI	Hustler, 463L, 10K	CNG Vehicle	E856	conversion	Forklift	Dies.	NG,Dies.	$409	[illegible]	$0	$1,150	-$353	$791	$382
Transportation	RI	2,000-5,999#, ST	CNG Vehicle	E830	conversion	Forklift	Gas	NG	$136	$118	$0	$283	-$118	$283	$126
Motors	ROF	SV Booster Pump	Effic.-2	14	mbp-400	Elect.		Elect.	$978	$971	(a)	$0	$814	$1,785	$806
Transportation	RI	Tractor, 44x2, 24000-44500# GVW	CNG Vehicle	B352	conversion	Truck	Gas	NG	$613	$9	$0	$1,730	-$631	$1,109	$496
Process	RI	Nitrogen Dist. System	Comp. Air	3		SLC-4			$53,554	$104,449	-$4,319	-$4,000	$0	$96,131	$42,576
Motors	ROF	pump, chilled water circ	Effic.-1	9	mcwp-10	719	Elect.	Elect.	$33	$32	(a)	$0	$27	$58	$26
Motors	ROF	pump, chilled water circ	Effic.-1	3	mcwp-10	719	Elect.	Elect.	$33	$32	(a)	$0	$27	$58	$26
Motors	ROF	pump, chilled water circ	Effic.-1	4	mcwp-10	719	Elect.	Elect.	$33	$32	(a)	$0	$27	$58	$26
Motors	ROF	pump, chilled water circ	Effic.-1	8	mcwp-10	719	Elect.	Elect.	$33	$32	(a)	$0	$27	$58	$26
Motors	ROF	pump, chilled water circ	Effic.-1	13	mpcw-10	719	Elect.	Elect.	$33	$32	(a)	$0	$27	$58	$26
Lighting	RI	FL 2X4 3-40 STD	FL 2X4 2-T8 ELC REF	55	R&D-2	1728	Elect.	Elect.	$14,625	$15,812	$4,342	$5,857	$0	$26,011	$11,386
Motors	ROF	SYa Booster Pump	Effic.-2	1	mbp-250		Elect.	Elect.	$454	$442	(a)	$0	$359	$801	$347
Motors	ROF	SYb Booster Pump	Effic.-2	2	mbp-250		Elect.	Elect.	$454	$442	(a)	$0	$359	$801	$347
Lighting	RI	FL 2X4 3-40 STD	FL 2X4 2-T8 ELC REF	21	MTRPOOL	10726	Elect.	Elect.	$666	$720	$198	$250	$0	$1,167	$501
Transportation	RI	Intercity, 41-51 psgr, 4x2	CNG Vehicle	B139	conversion	Bus	Dies.	NG,Dies.	$409	-$11	$0	$889	-$182	$696	$287
Motors	ROF	fan, exhaust	Effic.-1	1	mef-2	715	Elect.	Elect.	$16	$15	(a)	$0	$12	$27	$11
Lighting	RI	FL 1X8 3-96 STD	FL 1X8 3-96 ELC	18	MTRPOOL	10726	Elect.	Elect.	$2,100	$2,106	$578	$835	$0	$3,520	$1,420
Motors	ROF	pump	Effic.-1	9	mp-1.5	717	Elect.	Elect.	$21	$20	(a)	$0	$15	$36	$14
Motors	ROF	pump	Effic.-1	4	mp-1.5	717	Elect.	Elect.	$21	$20	(a)	$0	$15	$36	$14
Lighting	RI	FL 2X4 4-40 STD	FL 2X4 3-T8 ELC REF	33	PRDCTN	8337	Elect.	Elect.	$592	$619	$170	$184	$0	$973	$381
Lighting	RI	FL 2X4 4-40 STD	FL 2X4 3-T8 ELC REF	38	PRDCTN	8337	Elect.	Elect.	$133	$139	$38	$41	$0	$219	$86
Transportation	RI	Modular, 4x4	CNG Vehicle	B163	conversion	Ambulance	Gas	NG	$613	$142	$0	$1,613	-$757	$998	$385
Lighting	RI	FL 2X4 2-40 STD	FL 2X4 2-T8 ELC	3	ADMIN	11777	Elect.	Elect.	$15,417	$14,072	$3,864	$7,117	$0	$25,053	$9,636
Lighting	RI	FL 2X4 2-40 STD	FL 2X4 2-T8 ELC	20	MTRPOOL	10726	Elect.	Elect.	$166	$151	$41	$76	$0	$269	$103
Lighting	RI	FL 2X4 2-40 STD	FL 2X4 2-T8 ELC	53	R&D-2	1784	Elect.	Elect.	$3,728	$3,402	$934	$1,721	$0	$6,058	$2,330
Lighting	RI	FL 1X4 2-40 STD	FL 1X4 2-T8 ELC	26	PRDCTN	8337	Elect.	Elect.	$61	$46	$13	$23	$0	$83	$32
Lighting	RI	FL 2X4 2-40 STD	FL 2X4 2-T8 ELC	92	WHS	13221	Elect.	Elect.	$16,715	$15,256	$4,190	$7,716	$0	$27,162	$10,447
Lighting	RI	FL 1X4 2-40 STD	FL 1X4 2-T8 ELC	60	R&D-2	398	Elect.	Elect.	$2,959	$2,701	$742	$1,366	$0	$4,809	$1,850
Lighting	RI	FL 2X4 2-40 STD	FL 2X4 2-T8 ELC	10	COMCATN	1762	Elect.	Elect.	$5,479	$5,001	$1,373	$2,529	$0	$8,904	$3,426
Lighting	RI	FL 2X4 2-40 STD	FL 2X4 2-T8 ELC	87	SHOP	1785	Elect.	Elect.	$6,312	$5,761	$1,582	$2,914	$0	$10,258	$3,945
Lighting	RI	FL 1X4 2-40 STD	FL 1X4 2-T8 ELC	28	PRDCTN	8337	Elect.	Elect.	$68	$62	$17	$31	$0	$110	$42
Lighting	RI	FL 1X4 2-40 EEF	FL 1X4 2-T8 ELC	30	PRDCTN	8337	Elect.	Elect.	$11	$9	$3	$6	$0	$18	$7
Lighting	RI	INC 60 CEIL	CFL 11 CEIL FIXT	7	BRK/ADM	13140	Elect.	Elect.	$16,681	$12,148	$3,964	$9,942	$0	$26,054	$9,373
Lighting	RI	INC 60 CEIL	CFL 11 CEIL FIXT	16	HSG-FAM	(411)	Elect.	Elect.	$27,369	$19,933	$6,504	$16,313	$0	$42,749	$15,379
Motors	ROF	fan, exhaust	Effic.-1	4	mef-2	738	Elect.	Elect.	$23	$21	(a)	$0	$15	$36	$13
Motors	ROF	fan, exhaust	Effic.-1	4	mef-1.5	715	Elect.	Elect.	$15	$11	(a)	$0	$12	$23	$8
Motors	ROF	fan, exhaust	Effic.-1	16	mef-1.5	715	Elect.	Elect.	$15	$11	(a)	$0	$12	$23	$8
Motors	ROF	fan, exhaust	Effic.-1	8	mef-1.5	715	Elect.	Elect.	$15	$11	(a)	$0	$12	$23	$8
Motors	ROF	fan, exhaust	Effic.-1	7	mef-1.5	715	Elect.	Elect.	$15	$11	(a)	$0	$12	$23	$8
Motors	ROF	pump, chiller recirc	Effic.-1	14	mcwp-1.5	715	Elect.	Elect.	$15	$11	(a)	$0	$12	$23	$8
Motors	ROF	fan, supply	Effic.-1	3	mef-1.5	715	Elect.	Elect.	$15	$11	(a)	$0	$12	$23	$8
Lighting	RI	FL 1X8 2-96 STD	FL 1X8 2-96 ELC	86	SHOP	1785	Elect.	Elect.	$9,162	$8,181	$2,247	$3,649	$0	$14,077	$4,925
Lighting	RI	FL 1X8 2-96 STD	FL 1X8 2-96 ELC	9	COMCATN	1762	Elect.	Elect.	$66,033	$59,027	$16,211	$26,330	$0	$101,568	$35,535
Lighting	RI	FL 1X8 2-96 STD	FL 1X8 2-96 ELC	91	WHS	11515	Elect.	Elect.	$15,267	$13,647	$3,748	$6,088	$0	$23,483	$8,216
Lighting	RI	FL 1X8 2-96 STD	FL 1X8 2-96 ELC	89	TRAING	14006	Elect.	Elect.	$13,758	$12,298	$3,377	$5,486	$0	$21,161	$7,404
Lighting	RI	FL 1X8 2-96 STD	FL 1X8 2-96 ELC	51	R&D-2	8310	Elect.	Elect.	$31,370	$28,041	$7,701	$12,508	$0	$48,251	$16,881
Lighting	RI	FL 1X8 2-96 STD	FL 1X8 2-63 ELC	17	MTRPOOL	10726	Elect.	Elect.	$910	$813	$223	$363	$0	$1,400	$490
Lighting	RI	FL 1X8 2-96 STD	FL 1X8 2-96 ELC	1	ADMIN	11777	Elect.	Elect.	$18,145	$16,220	$4,454	$7,235	$0	$27,909	$9,764
Motors	ROF	pump	Effic.-1	15	mp-1	717	Elect.	Elect.	$19	$13	(a)	$0	$16	$29	$10
Motors	ROF	pump	Effic.-1	12	mp-1	717	Elect.	Elect.	$19	$13	(a)	$0	$16	$29	$10
Transportation	ROF	Modular, 4x4, 4 litter	CNG Vehicle	B164	conversion	Ambulance	Gas	NG	$187	$7	$0	$503	-$232	$278	$91
Lighting	RI	FL 2X4 4-40 EEF	FL 2X4 3-T8 ELC REF	43	PRDCTN	8337	Elect.	Elect.	$30	$28	$7	$11	$0	$44	$14
Lighting	RI	MERC 400 PEND	HPS 200 PEND	82	R&D-1	8310	Elect.	Elect.	$2,272	$2,329	$849	$109	$0	$3,287	$1,015
Lighting	RI	FL 2X4 3-34 STD	FL 2X4 2-T8 ELC REF	54	R&D-2	398	Elect.	Elect.	$22,385	$18,299	$5,025	$8,865	$0	$32,289	$9,903
Motors	ROF	SYc Booster Pump	Effic.-2	3	mbp-250		Elect.	Elect.	$454	$295	(a)	$0	$359	$654	$200
Motors	ROF	fan, exhaust	Effic.-1	10	mef-1.5	738	Elect.	Elect.	$21	$15	(a)	$0	$15	$30	$9
Motors	ROF	fan, exhaust	Effic.-1	7	mef-1.5	738	Elect.	Elect.	$21	$15	(a)	$0	$15	$30	$9

TABLE 4.6. (contd)

ERO Category	RI or ROF	Equipment	Description of ERO	ID	ID2	Exist. Facility Fuel	Result. Fuel	Annualized Installed Cost (1992 $)	Annualized Energy Savings (1992 $)	Annualized Demand Savings (1992 $)	Annualized O&M Savings (1992 $)	Annualized Replace. Savings (1992 $)	Annualized Total Savings (1992 $)	Annualized Net Savings (1992 $)
Motors	ROF	fan, exhaust	Effic.-1	5	mef-1.5	738 Elect.	Elect.	$21	$15	(a)	$0	$15	$30	$9
Lighting	RI	MERCURY VAPOR 400W CEIL	HPS 200 PEND	83	R&D-1	398 Elect.	Elect.	$202	$214	$59	$11	$0	$284	$82
Lighting	RI	MERC 175	HPS 100 PEND	23	MTRPOOL	10728 Elect.	Elect.	$890	$1,068	$293	-$193	$0	$1,168	$279
Lighting	RI	FL 1X4 2-40 EEF	FL 1X4 2-T8 ELC	31	PRDCTN	8337 Elect.	Elect.	$6	$4	$1	$3	$0	$7	$2
Lighting	RI	FL 1X4 2-40 EEF	FL 1X4 2-T8 ELC	27	PRDCTN	8337 Elect.	Elect.	$57	$36	$10	$27	$0	$73	$17
Lighting	RI	MERCURY VAPOR 400W WALL	HPS 200 WALL	84	R&D-1	398 Elect.	Elect.	$339	$321	$88	$17	$0	$425	$86
Lighting	RI	FL 2X4 2-34 STD	FL 2X4 2-34 ELC	52	R&D-2	8310 Elect.	Elect.	$1,438	$781	$214	$786	$0	$1,781	$344
Space Heating	RI	Insulation	Attic Insulation	1a		HSG-FAM NG	NG	$98,278	$101,645	$0	$0	$18,771	$120,416	$22,139
Motors	ROF	pump	Effic.-1	1	mp-1.5	717 Elect.	Elect.	$21	$10	(a)	$0	$15	$25	$4
Motors	ROF	pump	Effic.-1	13	mp-1.5	717 Elect.	Elect.	$21	$10	(a)	$0	$15	$25	$4
Motors	ROF	pump	Effic.-1	14	mp-1.5	717 Elect.	Elect.	$21	$10	(a)	$0	$15	$25	$4
Motors	ROF	pump	Effic.-1	7	mp-1.5	717 Elect.	Elect.	$21	$10	(a)	$0	$15	$25	$4
Transportation	ROF	2,000-5,999#, PT	CNG Vehicle	E831	conversion	Forklift Gas	NG	$249	$20	$0	$491	-$214	$297	$48
Lighting	RI	INC 300 CEIL	MH 100 PEND	78	R&D-1	1728 Elect.	Elect.	$1,381	$1,188	$329	$97	$0	$1,624	$243
Lighting	RI	FL 2X4 4-40 EEF	FL 2X4 3-T8 ELC REF	41	PRDCTN	8337 Elect.	Elect.	$1,257	$837	$230	$410	$0	$1,477	$220
Lighting	RI	FL 2X4 4-40 EEF	FL 2X4 3-T8 ELC REF	42	PRDCTN	8337 Elect.	Elect.	$74	$49	$14	$24	$0	$87	$13
Lighting	RI	FL 2X4 4-40 EEF	FL 2X4 3-T8 ELC REF	35	PRDCTN	8337 Elect.	Elect.	$89	$59	$16	$29	$0	$104	$16
Lighting	RI	INC 60 CEIL	CFL 11 CEIL FIXT	81	R&D-1	21200 Elect.	Elect.	$347	$175	$48	$174	$0	$397	$50
Trans. & Dist.	ROF	< = 1000 KVA Transformers	Amorphous Core			Elect.	Elect.	$340,091	$82,219	$10,888	$0	$295,069	$388,176	$48,085
Process	RI	Hydrazine Incinerators	Bubble Cap Scrubbers			SLC-4		$57,533	$11,440	(a)	$44,200	$6,622	$62,262	$4,729
Lighting	RI	FL 2X4 4-40 STD	FL 2X4 4-T8 ELC	34	PRDCTN	8337 Elect.	Elect.	$127	$60	$60	$15	$0	$135	$8
Lighting	RI	FL 2X4 4-40 STD	FL 2X4 4-T8 ELC	37	PRDCTN	8337 Elect.	Elect.	$9	$4	$4	$1	$0	$10	$1
Lighting	RI	INC 60 CAN	FL 11 CAN	15	HSG-FAM	(411) Elect.	Elect.	$11,456	$6,644	$2,188	$3,337	$0	$12,149	$693
Motors	ROF	SY6 Well Pump	Effic.-2	3	wp-75	Elect.	Elect.	$133	$0	(a)	$0	$139	$139	$6
Trans. & Dist.	ROF	> 1000 KVA Transformers	Impvd Si Steel Core			Elect.	Elect.	$118,281	$18,288	$2,422	$0	$99,728	$120,436	$2,145
Totals								$1,250,028	$1,666,504	$482,469	$809,819	$355,743	$3,114,534	$1,864,506

Notes:

(a) Demand has not been considered due to uncertainty about contribution to monthly peak.
(b) SVPP O&M savings consists of $35,865 credit from sale of emissions permits, less $39,662 increased O&M.
SVPP reported values are for 1994. Generation will decline over time. See Appendix A. Net Electricity generation with increased natural gas use.
While the analysis for the Volume 3: Resource Assessment used a 4.6% discount rate, the SVPP analysis (PNL-8558) used a 4.0% discount rate.

TABLE 4.7. LCC Results: EROs Constituting the Minimum Life-Cycle Cost Efficiency Resource Aggregated by Fuel Type

ERO Category	Present Value of Installed Cost (1992 $)	First-Year Energy Savings (MBtu) (c)	Full Implement. Energy Savings (MBtu) (c)	Present Value of Energy Savings (1992 $)	First-Year Demand Savings (kW-mo) (c)	Full Implement. Demand Savings (kW-mo) (c)	Present Value of Demand Savings (1992 $)	Present Value of O&M Savings (1992 $)	Present Value of Replace. Savings (1992 $)	Present Value of Total Savings (1992 $)	Net Present Value (1992 $)
Elect.	$13,710,556	38,362	49,412	$10,101,170	27,494	31,819	$2,258,386	$5,071,339	$5,946,882	$23,377,777	$9,667,221
Fuel-Switch (a) (b)	$2,748,198	25,372	25,376	$10,779,679	-842	-842	$4,822,699	$3,878,826	-$942,039	$18,539,165	$15,790,965
NG	$1,849,274	31,818	34,685	$3,424,248	0	0	$0	$0	$208,987	$3,633,235	$1,783,961
Propane	$38,345	1,514	1,514	$153,795	0	0	$0	$0	$7,324	$161,119	$122,774
Totals	$18,346,373	97,066	110,987	$24,458,892	26,652	30,977	$7,081,085	$8,950,165	$5,221,154	$45,711,296	$27,364,921

Notes:

(a) SVPP O&M savings consists of $560,288 credit from sale of emissions permits, less $619,602 increased O&M.
SVPP reported values are for 1994. See Appendix A.
While the analysis for the Volume 3: Resource Assessment used a 4.6% discount rate, the SVPP analysis (PNL-8556) used a 4.0% discount rate.

(b) Fuel-Switch includes process, transportation, and SVPP EROs.

(c) Energy and demand savings for the SVPP, which are not included, are -234,440 MBtu and 51,300 kW-mo respectively.
During the remaining 17-year life of the gas turbines at the SVPP, electricity generation and the related natural gas use will decline over time, resulting in reduced energy and demand savings for subsequent years.

TABLE 4.8. LCC Results: EROs Constituting the Minimum Life-Cycle Cost Efficiency Resource Aggregated by ERO Category

ERO Category	Present Value of Installed Cost (1992 $)	First-Year Energy Savings (MBtu)	Full Implement. Energy Savings (MBtu)	Present Value of Energy Savings (1992 $)	First-Year Demand Savings (kW-mo)	Full Implement. Demand Savings (kW-mo)	Present Value of Demand Savings (1992 $)	Present Value of O&M Savings (1992 $)	Present Value of Replace. Savings (1992 $)	Present Value of Total Savings (1992 $)	Net Present Value (1992 $)
Lighting	$6,712,768	31,586	31,586	$7,132,365	27,279	27,279	$2,046,905	$5,071,339	$0	$14,250,609	$7,537,840
Motors	$270,223	6,776	7,051	$1,493,715	215	215	$16,145	$0	$152,538	$1,662,398	$1,392,176
Process	$1,855,800	4,966	4,966	$2,308,464	-842	-842	-$63,383	$951,055	$218,549	$3,414,685	$1,558,883
Space Heating	$1,745,786	27,860	27,860	$2,858,824	0	0	$0	$0	$318,463	$3,177,287	$1,431,502
SVPP (a)	$0	(a)	(a)	$5,872,259	(a)	(a)	$4,886,082	-$59,314	$0	$10,699,027	$10,699,027
Transportation	$892,398	20,406	20,410	$2,598,956	0	0	$0	$2,987,085	-$1,160,588	$4,425,453	$3,533,055
Trans. & Dist.	$6,727,565	0	10,775	$1,475,090	0	4,325	$195,336	$0	$5,794,344	$7,464,770	$737,205
Water Heating	$141,833	5,470	8,339	$719,219	0	0	$0	$0	-$102,152	$617,066	$475,234
Totals	$18,346,373	97,064	110,987	$24,458,892	26,652	30,977	$7,081,085	$8,950,165	$5,221,154	$45,711,296	$27,364,921

Notes:

(a) SVPP O&M savings consists of $560,288 credit from sale of emissions permits, less $619,602 increased O&M.
SVPP reported values are for 1994. See Appendix A.
While the analysis for the Volume 3: Resource Assessment used a 4.6% discount rate, the SVPP analysis (PNL-8556) used a 4.0% discount rate.
First-year energy and demand savings will be -234,440 MBtu and 51,300 kW-mo respectively.
During the remaining 17-year life of the gas turbines at the SVPP, electricity generation and the related natural gas use will decline over time, resulting in reduced energy and demand savings for subsequent years.

TABLE 4.9. Annualized LCC Results: EROs Constituting the Minimum Life-Cycle Cost Efficiency Resource Aggregated by Fuel Type

ERO Category	Annualized Installed Cost (1992 $)	First-Year Energy Savings (MBtu) (c)	Full Implement. Energy Savings (MBtu) (c)	Annualized Energy Savings (1992 $)	First-Year Demand Savings (kW-mo) (c)	Full Implement. Demand Savings (kW-mo) (c)	Annualized Demand Savings (1992 $)	Annualized O&M Savings (1992 $)	Annualized Replace. Savings (1992 $)	Annualized Total Savings (1992 $)	Annualized Net Savings (1992 $)
Elect.	$934,167	38,362	49,412	$688,242	27,494	31,819	$153,875	$345,535	$405,190	$1,592,842	$658,675
Fuel-Switch (a) (b)	$187,248	25,372	25,376	$734,472	-842	-842	$328,594	$264,283	-$64,186	$1,263,164	$1,075,916
NG	$126,000	31,816	34,685	$233,311	0	0	$0	$0	$14,239	$247,550	$121,550
Propane	$2,613	1,514	1,514	$10,479	0	0	$0	$0	$499	$10,978	$8,365
Totals	$1,250,028	97,064	110,987	$1,666,504	26,652	30,977	$482,469	$609,819	$355,743	$3,114,534	$1,864,506

Notes:

(a) SVPP O&M savings consists of $35,865 credit from sale of emissions permits, loss $39,662 increased O&M.
SVPP reported values are for 1994. See Appendix A.
While the analysis for the Volume 3: Resource Assessment used a 4.6% discount rate, the SVPP analysis (PNL-8556) used a 4.0% discount rate.

(b) Fuel-switch includes process, transportation, and SVPP EROs.

(c) Energy and demand savings for the SVPP, which are not included, are -234,440 MBtu and 51,300 kW-mo respectively.
During the remaining 17-year life of the gas turbines at the SVPP, electricity generation and the related natural gas use will decline over time, resulting in reduced energy and demand savings for subsequent years.

TABLE 4.10. Annualized LCC Results: EROs Constituting the Minimum Life-Cycle Cost Efficiency Resource Aggregated by ERO Category

ERO Category	Annualized Installed Cost (1992 $)	First-Year Energy Savings (MBtu)	Full Implement. Energy Savings (MBtu)	Annualized Energy Savings (1992 $)	First-Year Demand Savings (kW-mo)	Full Implement. Demand Savings (kW-mo)	Annualized Demand Savings (1992 $)	Annualized O&M Savings (1992 $)	Annualized Replace. Savings (1992 $)	Annualized Total Savings (1992 $)	Annualized Net Savings (1992 $)
Lighting	$457,374	31,586	31,586	$485,963	27,279	27,279	$139,466	$345,535	$0	$970,964	$513,590
Motors	$18,412	6,776	7,051	$101,774	215	215	$1,100	$0	$10,393	$113,267	$94,856
Process	$126,445	4,966	4,966	$157,287	-842	-842	-$4,319	$64,800	$14,891	$232,659	$106,214
Space Heating	$118,949	27,860	27,860	$194,786	0	0	$0	$0	$21,698	$216,484	$97,535
SVPP (a)	$0	(a)	(a)	$400,106	(a)	(a)	$332,913	-$4,041	$0	$728,977	$728,977
Transportation	$60,803	20,406	20,410	$177,080	0	0	$0	$203,525	-$79,077	$301,528	$240,724
Trans. & Dist.	$458,382	0	10,775	$100,505	0	4,325	$13,309	$0	$394,797	$508,611	$50,229
Water Heating	$9,664	5,470	8,339	$49,004	0	0	$0	$0	-$6,960	$42,044	$32,380
Totals	$1,250,028	97,064	110,987	$1,666,504	26,652	30,977	$482,469	$609,819	$355,743	$3,114,534	$1,864,506

Notes:

(a) SVPP O&M savings consists of $35,865 credit from sale of emissions permits, less $39,662 increased O&M.
SVPP reported values are for 1994. See Appendix A.
While the analysis for the Volume 3: Resource Assessment used a 4.6% discount rate, the SVPP analysis (PNL-8556) used a 4.0% discount rate.
First-year energy and demand savings will be -234,440 MBtu and 51,300 kW-mo respectively.
During the remaining 17-year life of the gas turbines at the SVPP, electricity generation and the related natural gas use will decline over time, resulting in reduced energy and demand savings for subsequent years.

TABLE 4.11. Total Resource

	Installed Cost (1992 $)	First-Year Energy Savings (MBtu) (a)	Full Implement. Energy Savings (MBtu) (a)	Energy Savings (1992 $)	First-Year Demand Savings (kW-mo) (a)	Full Implement. Demand Savings (kW-mo) (a)	Demand Savings (1992 $)	O&M Savings (1992 $)	Replacement Savings (1992 $)	Total Savings (1992 $)	Net Savings (1992 $)
Present Value	$18,346,373	97,066	110,987	$24,458,892	26,652	30,977	$7,081,085	$8,950,165	$5,221,154	$45,711,296	$27,364,921
Annualized	$1,250,028	97,066	110,987	$1,666,504	26,652	30,977	$482,469	$609,819	$355,743	$3,114,534	$1,864,506

Notes:

(a) SVPP O&M savings consists of $35,865 credit from sale of emissions permits, less $39,662 increased O&M.
SVPP reported values are for 1994. See Appendix A.
While the analysis for the Volume 3: Resource Assessment used a 4.6% discount rate, the SVPP analysis (PNL-8556) used a 4.0% discount rate.
First-year energy and demand savings will be -234,440 MBtu and 51,300 kW-mo respectively.
During the remaining 17-year life of the gas turbines at the SVPP, electricity generation and the related natural gas use will decline over time, resulting in reduced energy and demand savings for subsequent years.

5.0 REFERENCES

American Society of Heating, Refrigerating and Air-Conditioning Engineers, Inc. (ASHRAE). 1989. 1989 ASHRAE Handbook Fundamentals. ASHRAE Headquarters, Atlanta, Georgia.

American Society of Heating, Refrigerating and Air-Conditioning Engineers, Inc. (ASHRAE). 1989. Ventilation for Acceptable Indoor Air Quality. ASHRAE Standard 62-1989, ASHRAE Headquarters, Atlanta, Georgia.

American Society of Heating, Refrigeration and Air-Conditioning Engineers, Inc. (ASHRAE). 1991. ASHRAE Heating, Ventilating, and Air-Conditioning Applications Handbook. ASHRAE Headquarters, Atlanta, Georgia.

ANSI/IEEE C57.92-1981. Guide for Loading Mineral-Oil-Immersed Power Transformers up to and including 100 MVA with 55 °C or 65 °C Average winding Rise, Institute of Electrical and Electronics Engineers, New York, NY.

Architect's and Engineer's Guide to Energy Conservation in Existing Buildings, Volume 2 - Energy Conservation Opportunities. April 1990. DOE/RL/01830P-H4, DOE Field Office, Richland, Washington.

Balcomb, J. D. 1980. Passive Solar Design Handbook (Volume II). Prepared by Los Alamos National Laboratory for the U.S. Department of Energy, Washington, D.C.

Boiler Efficiency Institute (BEI). 1991. Boiler Efficiency Improvement. Boiler Efficiency Institute, Auburn, Alabama.

Brooks, C. L., J. J. Bonk, S. F. Mauser, C. J. Merrell, R. A. Cordasev, and D. R. Smith. 1986. Transmission & Distribution Efficiency Improvement R&D Survey Project: Final Report. DOE/BP-17102-1, Bonneville Power Administration, Portland, Oregon.

Daellenbach, K. K., J. E. Dagle, R. W. Reilly, and S. A. Shankle. 1993. Economic Analysis of Operating Alternatives for the South Vandenberg Power Plant at Vandenberg Air Force Base, California. PNL-8556, Pacific Northwest Laboratory, Richland, Washington.

De Steese, J. G., S. B. Merrick, R. C. Tepel, and J. W. Callaway. 1987. Assessment of Conservation Voltage Reduction Applicable in the Bonneville Power Administration Service Area. DOE/BP 14031-1, Prepared by Pacific Northwest Laboratory for the Bonneville Power Administration, Portland, Oregon.

Earley, M. W., R. H. Murray, and J. M. Caloggero. 1989. The National Electrical Code-1990 Handbook. National Fire Protection Association, Quincy Massachusetts.

Gönen, T. 1986. Electric Power Distribution System Engineering. McGraw Hill Book Company, New York.

Halverson, M. A., E. E. Richman, J. E. Dagle, B. J. Hickman, K. K. Daellenbach, G. P. Sullivan. 1993. Vandenberg Air Force Base Integrated Resource Assessment, Volume 2: Baseline Detail. PNL-8730, Vol. 2, Pacific Northwest Laboratory, Richland, Washington.

Illuminating Engineering Society of North America (IES). 1981. Illuminating Engineering Society of North America Lighting Handbook. Illuminating Engineering Society of North America, New York.

Keller and Gannon. 1992. Concept Design Study: SLC-4 Uninterruptible Power Supply (UPS) at Vandenberg Air Force Base, 100% Submittal. K&G Engineers and Architects, San Franscisco, California.

Lovins, A., J. Neymark, P. Flanigan, P. Kiernan, B. Bancroft, and M. Sheppard. 1989. The State of the Art: Drivepower. (Competitek series.) Rocky Mountain Institute, Snowmass, Colorado.

Means. 1991. MEANS Building Construction Cost Data: 1991 14th Annual Edition. R. S. Means Company, Inc., Kingston, Massachusetts.

Means. 1991. MEANS Electrical Cost Data: 1991 14th Annual Edition. R. S. Means Company, Inc., Kingston, Massachusetts.

Means. 1991. MEANS Mechanical Cost Data: 1991 14th Annual Edition. R. S. Means Company, Inc., Kingston, Massachusetts.

Nadel, S., M. Shepard, S. Greenberg, G. Katz, A. De Almeida. 1991. Energy-Efficient Motor Systems. American Council for an Energy Efficient Economy (ACEEE), Washington, D.C., and Berkeley, California.

NASA. 1984a. Test Plan, Performance Verification Testing of VAFB Fuel Scrubber. TP-WSTF-357. National Aeronautics and Space Administration. White Sands Test Facility, Las Cruces, New Mexico. February 1, 1984.

NASA. 1984b. Test Report, Performance Verification Testing of VAFB Fuel Vapor Scrubber. TR-357-001. National Aeronautics and Space Administration. White Sands Test Facility, Las Cruces, New Mexico. May 23, 1984.

NASA. 1992. Test Report, Evaluation of the U.S. Air Force Hydrazine Waste Water Treatment System. TR-628-001. National Aeronautics and Space Administration. White Sands Test Facility, Las Cruces, New Mexico. March 2, 1992.

National Bureau of Standards (NBS). 1987. Life-Cycle Costing Manual for the Federal Energy Management Program. NBS Handbook 135, United States Government Printing Office, Washington D.C.

NFPA. 1989. NFPA 496 - Standard for Purged and Pressurized Enclosures for Electrical Equipment.

NFPA. 1990. National Fire Protection Association (NFPA) 70 - National Electrical Code.

NIST. 1991. Energy Prices and Discount Factors for Life-Cycle Cost Analysis 1992. NISTIR 85-3272-6, National Institute of Standards and Technology, Gaithersburg, Maryland.

Office of Federal Energy Management Programs. 1993. Lighting Technology Screening Matrix (LSTM). Developed by Pacific Northwest Laboratory as part of the Federal Relighting Initiative, Richland, Washington. February 18, 1993.

Secrest, T. J., J. W. Currie, J. G. De Steese, J. A. Dirks, T. J. Marseille, G. B. Parker, E. E. Richman, and S. A. Shankle. 1991. Fort Lewis Electric Energy Baseline and Efficiency Resource Assessment. PNL-7763, Pacific Northwest Laboratory, Richland, Washington.

Solar Energy Research Institute (SERI). 1990. Insolation Data Manual and Direct Normal Solar Radiation Data Manual. SERI/TP-220-3880, Solar Energy Research Institute, Golden, Colorado.

Turiel, I. 1990. U.S. Residential Appliance Energy Efficiency: Present Status and Future Directions. Lawrence Berkeley Laboratory, Berkeley, California.

USAF. 1978. Facility Design and Planning: Engineering Weather Data. AFM 88-29, United States Air Force. February 1, 1978.

USAF. 1982. Specification SD-CF-0168. Critical Item Product Specification for Fuel Vapor Scrubber. SD-CF-0158. United States Air Force. Vandenberg Air Force Base, California. December 30, 1982.

USAF. 1990. Technical Evaluation of Infrastructure, Vandenberg Air Force Base - Report of Findings . Headquarters United States Air Force Directorate of Engineering and Services. Bolling Air Force Base. February 1990.

U.S. Army. 1978. Engineering Weather Data for Design and Construction. Department of the Army, Technical Manual 5-785, U.S. Government Printing Office, Washington D.C.

Westinghouse Electric Corporation. 1987. Substation Transformers. Price List 43-300. WEC Small Transformers Division, South Boston, Virginia.

Westinghouse Electric Corporation. 1981. Power Transformers. Technical Data 48-500. WEC Medium Power Transformer Division, Sharon, Pennsylvania.

W. W. Grainger Inc. 1991. Grainger General Catalog No. 379. W. W. Grainger Inc., North Suburban, Illinois.

APPENDIX

SUMMARY OF ECONOMIC ANALYSIS CASE STUDY OF SOUTH VANDENBERG POWER PLANT OPERATING SCENARIOS

APPENDIX

SUMMARY OF ECONOMIC ANALYSIS CASE STUDY OF SOUTH VANDENBERG POWER PLANT OPERATING SCENARIOS

This appendix summarizes the results of an economic analysis of alternative operating strategies for the South Vandenberg Power Plant (SVPP), located at Vandenberg Air Force Base (VAFB) in California (Daellenbach et al. 1993). The SVPP was designed to provide electrical power in support of West Coast space shuttle launches, a mission that was cancelled. The SVPP was completed in 1990, and has been used to provide the Missile Operation Support Requirement (MOSR) for missile launches at the Space Launch Complexes (SLCs) since November 1990. In this capacity, the SVPP has provided both primary and backup power support at the primary SLCs (Atlas launches at SLC-3; Titan launches at SLV-4; and occasional Scout launches at SLC-3). The missile launch support activity is operational only a small number of hours per year, resulting in substantial idle capacity. Maintenance and operation of the SVPP have proved costly, leading to this analysis, whose purpose is to investigate the cost-effectiveness of a number of alternative operating strategies for the SVPP, including peak shaving and closure. Because VAFB has time-of-day electric rates from their utility, Pacific Gas and Electric (PG&E), the SVPP could be used to generate electricity during peak demand periods, thereby reducing both demand and energy charges to VAFB.

The analysis began by developing three primary strategies. Each strategy describes a way to provide primary and backup electricity sources to meet the MOSR, including a role for the SVPP. The status-quo strategy (base case) is for the SVPP to support both the primary and backup electricity requirements without peak shaving. Two alternative strategies include various combinations of purchasing primary power from PG&E and providing backup power through an Uninterruptible Power Supply (UPS), whose electricity is provided from dedicated generators or the SVPP. Each of these three primary strategies was then compounded by considering peak shaving, which results in a total of six strategies to be analyzed, as summarized in Table A.1.

TABLE A.1. SVPP Analysis Operating Strategies

#	Operating Strategy	Four Operating Dimensions			
		Primary Power	Backup Power	Backup Generator	Peak Shaving
1A	Status Quo	SVPP	SVPP	None	No
1B	Base Case + Peak Shave	SVPP	SVPP	None	Yes
2A	UPS + SVPP	Purchased	UPS	SVPP	No
2B	UPS + SVPP + Peak Shave	Purchased	UPS	SVPP	Yes
3A	UPS + Generator	Purchased	UPS	Dedicated Generator	No
3B	UPS + Generator + Peak Shave	Purchased	UPS	Dedicated Generator	Yes

SVPP = South Vandenberg Power Plant; UPS = Uninterruptible Power Supply.

The cost-effectiveness of each of the six strategies was analyzed under three different scenarios. The base-case scenario assumed that no salvage value is realized upon closure of the SVPP and that existing constraints on the annual hours of SVPP operation, as mandated by the Santa Barbara Air Pollution Control District (SBAPCD), remain unchanged. The first alternative scenario assumed that the SBAPCD constraints on operating hours are relaxed and that the SVPP can peak shave whenever it is cost-effective to do so. The intent of this scenario is to determine the value of peak-shaving operation without constraints on the hours of generation, so that VAFB staff could determine, based upon the cost of negotiating reduced constraints, whether it would be worthwhile to attempt to eliminate the existing constraints. In the second alternative scenario, we assumed that the salvage value of the SVPP would be realized upon its closure. This assumed that the gas turbines are sold or transferred to another federal site (in the strategy where the SVPP is closed).

The overall analysis was first simplified by determining the cost-effectiveness of peak shaving across each of the three major strategies. It was found that when the SVPP is operated as a peak-shaving plant, it can cover

not only its variable costs of generation but also its annual fixed costs of operation. Under the cost assumptions provided by VAFB staff, the SVPP is cost-effective as a stand-alone peak-shaving plant. Hence, scenarios that include peak shaving will always be preferred to those without peak shaving, and all of the "A" strategies were dismissed from further analysis, except strategy 1A because it is the current operating strategy and provides an important basis of comparison.

The remaining strategies (1A, 1B, 2B, and 3B) were then analyzed to determine the most cost-effective way to meet the mission requirements and operate the SVPP. The life-cycle cost (LCC) of each of the four strategies was calculated. Strategy 1A is the existing operating strategy. In strategy 1B, the SVPP is operated for primary and backup MOSR power and for peak shaving, with peak shaving beginning in 1994 and extending through the life of the gas turbines (2009). In 2009, the installation of grounding transformers will be completed, thereby allowing safe transmission of power generated at the SVPP onto the PG&E power grid. Strategies 2B and 3B, which call for the installation of a UPS system, were analyzed assuming that a UPS system is operational on January 1, 1996, the first year that the UPS system could be available. Because the relative gas and electricity price projections change continually, it is not adequate to assume that these dates are the optimal times to begin operations. Hence, the analysis looks at UPS operations beginning in every year starting in 1996 through the life of the current turbines (2009). The LCC from the most cost-effective year of installation was then used as the figure of merit for comparison purposes. Note that in all analyses it is assumed that a UPS system with its dedicated generators is installed to replace the SVPP in 2010 if these systems were not installed earlier.

The LCC results are summarized in Table A.2. In each case, the net present value is the difference between the LCC of the alternate strategy being analyzed and that of the base-case strategy (strategy 1A). Table A.2 assumes that the UPS system is installed in 1996.

The results of the analysis indicate that the most cost-effective action is to delay installation of the UPS system until after the useful life of the

TABLE A.2. Analysis Results

Strategy Number	Operating Strategy	Life-Cycle Cost	Net Present Value	Optimal Year to Install UPS
1A	Status Quo	$13,561,590	NA	2010
1B	SVPP + PS	$3,289,468	$10,272,123	2010
2B	UPS + SVPP + PS	$4,963,101	$8,598,489	2010
3B	UPS + Gen + PS	$10,148,855	$3,412,735	2010

PS = Peak Shave; SVPP = South Vandenberg Power Plant; UPS = Uninterruptible Power Supply; NA = Not Available.

SVPP. It is most cost-effective for the SVPP to be operated in a peak-shaving mode throughout the remainder of its life. The next most cost-effective case (installing a UPS system using the SVPP as the backup generator) is approximately $1.7 million less cost-effective if the UPS is installed in the year 1996. As the installation of the UPS system is delayed, the LCC continues to decline until 2009 when the LCC falls to $3,302,691. This is very close to the LCC of strategy 1B, as should be expected. The only difference between strategies 1B and 2B implemented in 2009 is a 1-year difference in when the UPS system is installed. Given that installation of the UPS is not a cost-effective strategy (as compared to strategy 1B), it should be delayed as long as possible. In the event that environmental constraints were relaxed, allowing all cost-effective peak shaving to occur, the LCC of all of the strategies (except 1A) would fall. It would still not be cost-effective to install a UPS system in 1996, but it would become just cost-effective in the year 2009. In other words, the impact of relaxing the environmental constraints to allow for a greater number of SVPP annual operating hours would accelerate the optimal year of the UPS installation by 1 year. Salvage value has no impact on the relative ranking of the strategies, because none of the best strategies include shutting down the SVPP.

The most cost-effective strategy, 1B, can in fact be improved upon. The strategy analyzed assumes the SVPP provides both primary and backup power for MOSR support. Because MOSR operations occur during partial peak and off-peak

hours, it would be more cost-effective to purchase primary power from PG&E, providing only backup power via the SVPP.

Table A.3 illustrates the impact of the alternative strategies on the costs of operating the SVPP for 1 year. The table shows the costs for 1996, so as to allow comparison with strategies 2B and 3B, which could not come into play until then. For the purposes of this table, it is assumed that the UPS system in strategies 2B and 3B is installed on January 1, 1996.

Table A.3 shows the cost of operating the SVPP under the current operating regime (status quo) and under each of the three peak-shaving strategies in the year 1996. The table then shows the value of the electricity generated at the SVPP, for both MOSR and peak-shaving purposes. The Net Annual Operating Cost is the total cost of operating the SVPP less the value of the electricity generated at the plant. Under the current operating regime, the plant would cost approximately $1.27 million to operate in 1996. The electricity generated for MOSR would cost VAFB approximately $130,000, and so the net cost of operating the SVPP would be approximately $1.15 million.

If the plant were operated in a peak-shaving mode in all cost-effective hours, the cost of operating the plant would rise to $2.06 million, primarily as a result of increased natural gas use. The value of the electricity generated at the plant would be $2.10 million, however, which would more than cover the cost of operating the SVPP, resulting in a net cost of -$40,000. If a UPS system were installed and the SVPP were freed from producing MOSR electricity (strategy 2B), the cost of labor at the plant would fall and the value of the electricity generated at the plant would rise, leading to a net operating cost of -$252,000 in 1996. If the UPS had its own backup generator (strategy 3B), the labor cost would be reduced still more, resulting in a net operating cost of -$307,000.

The last row of Table A.3, Net Annual Cost, reflects the results shown by the LCCs in Table A.2. The decreased net operating cost of strategies 2B and 3B is not sufficient to make up for the investment in the UPS required to implement the strategies. Strategy 2B requires an investment of nearly

TABLE A.3. Snapshot of SVPP Operating Costs in 1996

	Status Quo Strat. 1A	Status Quo + PS Strat. 1B	UPS+SVPP+PS Strat. 2B	UPS+GEN+PS Strat. 3B
Fixed Annual Operating Costs				
Environmental Costs	$354,851	$354,851	$354,851	$354,851
Non-Fuel O&M	$101,843	$101,843	$101,843	$101,843
Labor	$583,422	$583,422	$305,225	$249,850
Increment Fee	$18,869	$18,869	$18,869	$18,869
Gas Customer Charge	$9,000	$9,000	$9,000	$9,000
Subtotal	$1,067,985	$1,067,985	$789,788	$734,412
Annual Variable Environmental Costs				
Rate per Ton	$165	$165	$165	$165
Tons	7.05	33.05	29.96	29.96
Subtotal	$1,163	$5,453	$4,943	$4,943
Annual Variable Non-Fuel Operating Costs				
Rate per Turbine Hour	$7.66	$7.66	$7.66	$7.66
Turbine Hours	2,013	9,439	8,557	8,557
Subtotal	$15,409	$72,257	$65,504	$65,504
Annual Fuel Cost	$187,782	$915,397	$1,054,323	$1,054,323
Total Annual Operating Cost	$1,272,338	$2,061,092	$1,914,558	$1,859,182
Annual Generation (MWh)	2,568	24,919	25,743	25,743
Value of Generation	$126,228	$2,101,544	$2,166,504	$2,166,504
Net Annual Operating Cost	$1,146,110	-$40,453	-$251,946	-$307,322
Annual Capitalization Cost	$0	$0	$313,021	$758,870
Net Annual Cost	$1,146,110	-$40,453	$61,075	$451,548

Gen = New Dedicated Generator; PS = Peak Shave; SVPP = South Vandenberg Power Plant; UPS = Uninterruptible Power Supply.

$5 million, and strategy 3B requires an investment of nearly $11 million (Keller and Gannon 1990). The $200,000 and $250,000 per year advantages these strategies have over strategy 1B are not sufficient to justify the expenditure. Strategy 1B requires no upfront investment - just a change in the current operating regime.

DISTRIBUTION

No. of
Copies

OFFSITE

12 DOE/Office of Scientific and Technical Information

M. Ginsberg
Federal Energy Management Program
U.S. Department of Energy
CE-44
1000 Independence Avenue, S.W.
Washington, DC 20585

L. Harris
Federal Energy Management Program
U.S. Department of Energy
CE-44
1000 Independence Avenue, S.W.
Washington, DC 20585

K. Dean DeVine
Federal Energy Management Program
U.S. Department of Energy
CE-44
1000 Independence Avenue, S.W.
Washington, DC 20585

J. R. Brodrick
U.S. Department of Energy
54-048, CE-422
1000 Independence Avenue, S.W.
Washington, DC 20585

V. Petrolatti
DOE/In-House Energy Management
U.S. Department of Energy
1000 Independence Avenue, S.W.
Washington, DC 20585

No. of
Copies

B. Starling
U.S. Army Corps of Engineers
Huntsville Division
CEHND-PM-CR
P.O. Box 1600
Huntsville, AL 35807-4301

F. Beason
AFCESA/ENM
139 Barnes Drive
Tyndall AFB, FL 32403-5319

T. Gildersleeve
AFCESA/ENE
139 Barnes Drive
Tyndall AFB, FL 32403-5319

5 C. A. Miller
Headquarters AFSPACECOM/DEEM
Peterson AFB, CO 80914

ONSITE

DOE Richland Operations Office

D. R. Segna (A5-90)

29 Pacific Northwest Laboratory

K. K. Daellenbach (K6-61)
J. E. Dagle (K5-20)
J. A. Dirks (K6-61)
A. L. Dittmer (K5-08)
D. B. Elliott (K6-57)
M. A. Halverson (K5-08)
B. J. Hickman (K5-25)
L. L. Larson (K6-61)
J. M. Keller (K5-08)
G. B. Parker (K7-82)

No. of Copies	
	D. R. Payson (K7-90)
	R. W. Reilly (K7-82)
	E. E. Richman (K5-08)
	W. F. Sandusky (K5-06) (5)
	S. A. Shankle (K6-57)
	D. S. Stucky (K5-57)
	G. P. Sullivan (K6-61)
	Project Files (2)
	Publishing Coordination
	Technical Report Files (5)

DATE FILMED

9/22/93

END