Association for Information and Image Management
1100 Wayne Avenue, Suite 1100
Silver Spring, Maryland 20910
301/587-8202

Centimeter

Inches

MANUFACTURED TO AIIM STANDARDS
BY APPLIED IMAGE, INC.

1 of 1

SAND--94-8602C
Conf-9409177--2

10x Reduction Imaging at 13.4 nm

D. A. Tichenor, G. D. Kubiak, M. E. Malinowski, R. H. Stulen, S. J. Haney, K. W. Berger, R. P. Nissen, G. A. Wilkerson, P. H. Paul, R. W. Arling, A. K. Ray-Chaudhuri

Sandia National Laboratories
PO Box 969
Livermore, California 94551-0969
phone (510)294-2137

W. C. Sweatt, W. W. Chow

Sandia National Laboratories
PO Box 5800
Albuquerque, New Mexico 87185-5800

J. E. Bjorkholm, R. R. Freeman, M. D. Himel, A. A. MacDowell, D. M. Tennant, L. A. Fetter, O. R. Wood, II,

AT&T Bell Laboratories
101 Crawfords Corner Road, PO Box 3030
Holmdel, New Jersey 07733-3030

W. K. Waskiewicz, D. L. White, D. L. Windt

AT&T Bell Laboratories
600 Mountain Avenue
Murray Hill, New Jersey 07974-2070

T. E. Jewell

Optical Engineering Consultant
1105 N. Cedar Brook Road
Boulder, Colorado 80304

ABSTRACT

Imaging experiments using a five-reflection system will be described. The system comprises a laser plasma source, ellipsoidal condenser, reflection mask, and spherical imaging optics.

DISCLAIMER

This report was prepared as an account of work sponsored by an agency of the United States Government. Neither the United States Government nor any agency thereof, nor any of their employees, makes any warranty, express or implied, or assumes any legal liability or responsibility for the accuracy, completeness, or usefulness of any information, apparatus, product, or process disclosed, or represents that its use would not infringe privately owned rights. Reference herein to any specific commercial product, process, or service by trade name, trademark, manufacturer, or otherwise does not necessarily constitute or imply its endorsement, recommendation, or favoring by the United States Government or any agency thereof. The views and opinions of authors expressed herein do not necessarily state or reflect those of the United States Government or any agency thereof.

MASTER

DISTRIBUTION OF THIS DOCUMENT IS UNLIMITED

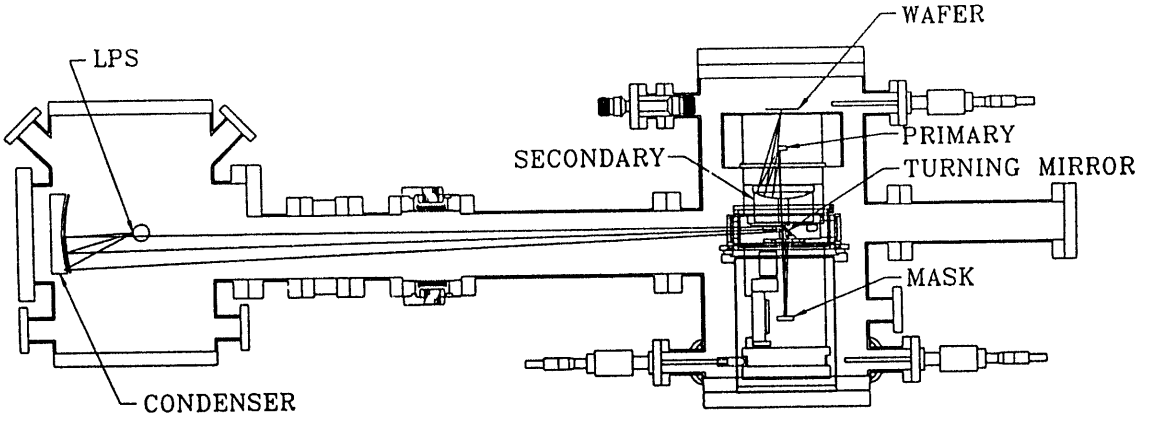

Figure 1. Sketch of 10x EUV imaging system.

An on-axis ellipsoidal collector, located behind a decentered 50 mm diameter aperture, collects EUV radiation from the source and directs it into the transport tube toward the Schwarzschild. The aperture protects the unused portion of the ellipsoid from LPS debris. The system provides for various means of debris mitigation. A 200 milliTorr pressure of He stops most of the atomic-size debris from depositing onto the condenser. A chopper, located between the source and condenser and rotating at 12,500 rpm, stops a significant fraction of the larger size debris. The remaining debris can be stopped by placing a 3700 Å thick Si membrane filter in front of the condenser. As an alternative to the membrane, the used portion of the condenser can be cleaned to restore reflectivity.

Two and a half percent of the available 2π ster radians is collected by the f/2.25 condenser aperture, providing Köhler illumination over the 4 mm field of view in the mask plane. The EUV radiation is directed onto the mask at near normal incidence via a 45° degree turning mirror located just below the Schwarzschild secondary. The radiation is reflected off of the mask into the Schwarzschild entrance pupil, and an 10x reduction image of the mask is formed on a resist -coated wafer located on three ball bearings on the Schwarzschild housing.

The Mo/Si multilayer coatings on the five reflecting elements must be matched to the same center wavelength (13.4 nm). Coatings with tapered d spacing are required in some cases to accommodate an incidence angle that varies across the clear aperture. The coating specifications on the various surfaces cover the full range of requirements that apply to a practical EUV lithography tool. The figure specifications include flats, spheres and an asphere. Incidence angles range from near normal to large angles, and wavelength matching requires both uniform and tapered d spacing. Table I summarizes these requirements. Measurements indicate that these specifications have been met to within ±1% on all surfaces, and experiments demonstrate EUV throughput consistent with those results.

Table 1. Multilayer requirements

	Element	Figure	Incidence Angle	d spacing
1	Condenser	Ellipsoidal	1.2^{o} - 12.6^{o}	Tapered
2	Turning Mirror	Flat	45°	Uniform
3	Mask	Flat	1.2^{o}	Uniform
4	Primary	Spherical	6.1^{o} - 13.6^{o}	Tapered
5	Secondary	Spherical	2.0^{o} - 4.3^{o}	Uniform

EUV imaging experiments have demonstrated 0.1 μm resolution over a 0.4 mm field of view. Figures 2 and 3 show images of lines and spaces of various widths down to 0.1 μm and a 0.1 μm gate structure for a field effect transistor. Images in PMMA resist have be recorded using 1200 laser pulses, corresponding to 6 seconds at full laser repetition rate.

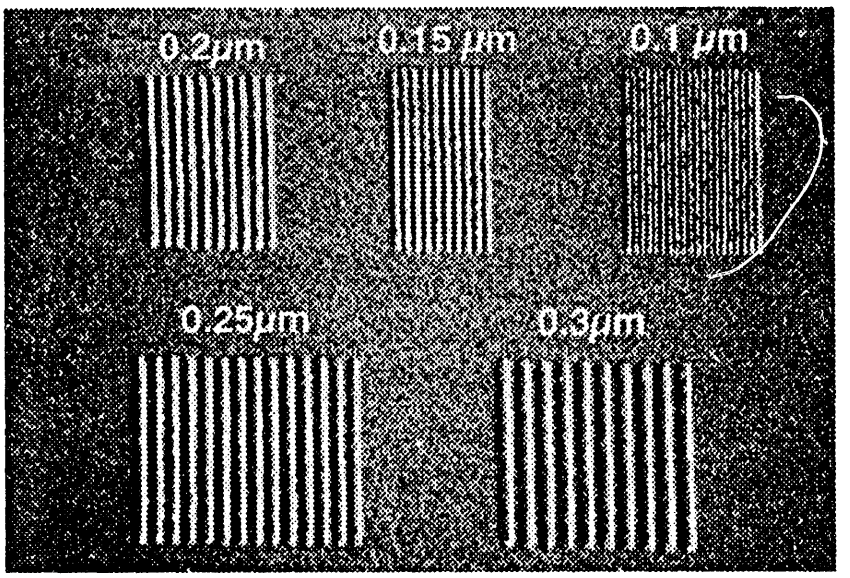

Figure 2. Ten-times-reduction EUV images in 600 Å of ZEP 520 resist showing lines and spaces down to 0.1 μm.

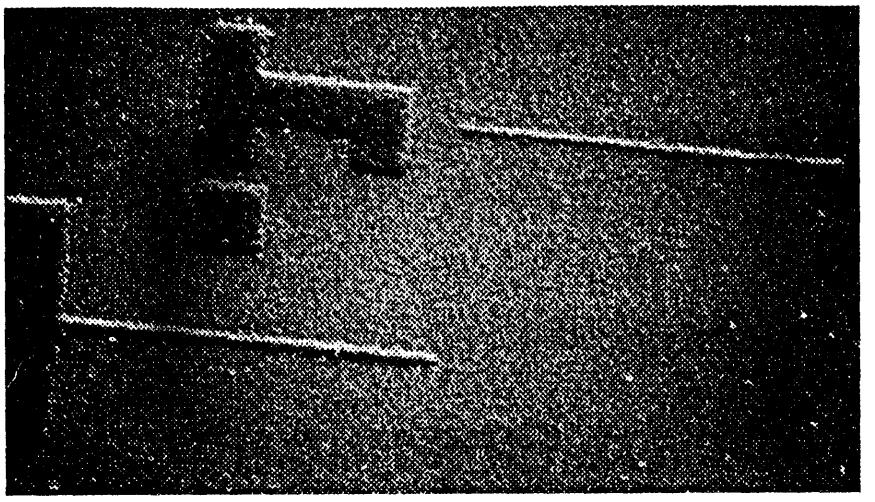

Figure 2. Ten-times-reduction EUV images in 600 Å of ZEP 520 resist of a gate structure for a 0.1 μm FET.

A silicon membrane filter was used in these experiments to eliminate near UV radiation emitted by the LPS. The multilayer-coated surfaces have enough reflectivity in the near UV to expose the resist and degrade the high resolution image, if a spectral filter is not used.

Reference:

1. D. A. Tichenor, G. D. Kubiak, M. E. Malinowski, R. H. Stulen, S. J. Haney, K. W. Berger, R. P. Nissen, R. L. Schmitt, G. A. Wilkerson, L. A. Brown, P. A. Spence, P. S. Jin, W. C. Sweatt, W. W. Chow, J. E. Bjorkholm, R. R. Freeman, M. D. Himel, A. A. MacDowell, D. M. Tennant, O. R. Wood, II, W. K. Waskiewicz, D. L. White, D. L. Windt and T. E. Jewell, "Development and characterization of a 10x Schwarzschild system for soft-x-ray projection lithography," **OSA Proceedings on Soft X-Ray Projection Lithography**, A. M. Hawryluk and R. H. Stulen, eds., Vol. 18, 79 (1993).

DATE
FILMED
9/29/94

END