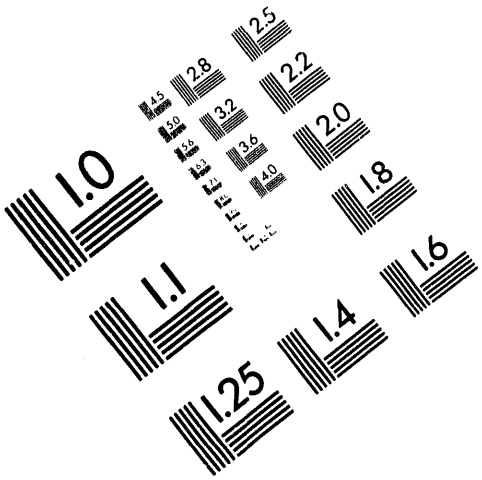

AIIM

Association for Information and Image Management

1100 Wayne Avenue, Suite 1100
Silver Spring, Maryland 20910

301/587-8202

Centimeter

1 2 3 4 5 6 7 8 9 10 11 12 13 14 15 mm

1 2 3 4 5

Inches

MANUFACTURED TO AIIM STANDARDS
BY APPLIED IMAGE, INC.

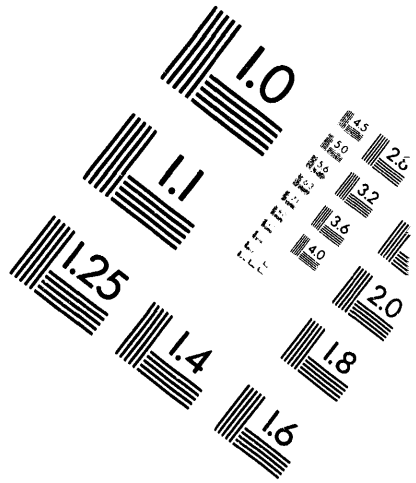

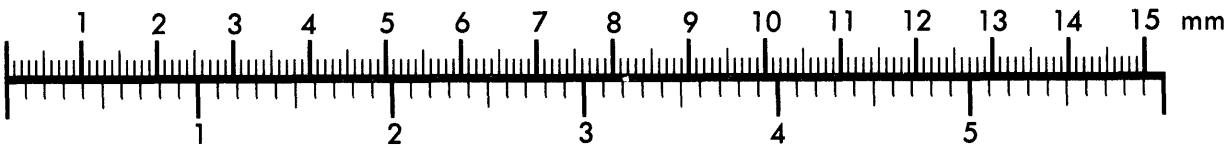

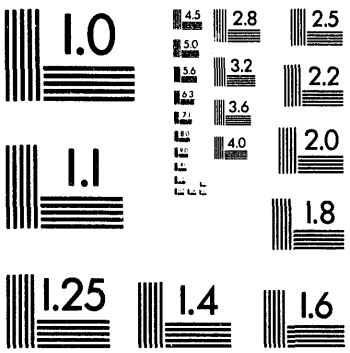

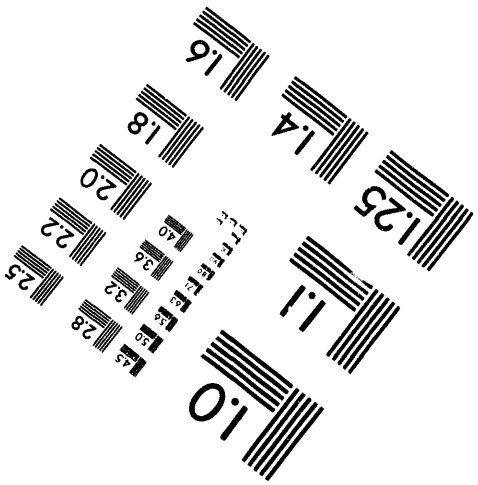

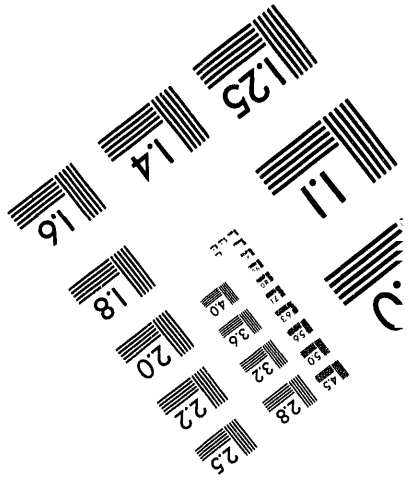

1 of 1

Miniature, vacuum compatible 1024 × 1024 CCD camera for x-ray, ultra-violet, or optical imaging

Alan D. Conder, James Dunn, Bruce K.F. Young

Lawrence Livermore National Laboratory, Livermore, CA 94551

We have developed a very compact ($60 \times 60 \times 75$ mm^3), vacuum compatible, large format (25×25 mm^2, 1024×1024 pixels) CCD camera for digital imaging of visible and ultraviolet radiation, soft to penetrating x-rays (≤20 keV), and charged particles. This camera provides a suitable replacement for film with a linear response, dynamic range and intrinsic signal-to-noise response superior than current x-ray film, and provides real-time access to the data. The spatial resolution of the camera (< 25 μm) is similar to typical digitization slit or step sizes used in processing film data. This new large format CCD camera has immediate applications as the recording device for streak cameras or gated microchannel plate diagnostics, or when used directly as the detector for x-ray, xuv, or optical signals. This is especially important in studying high-energy plasmas produced in pulse-power, ICF, and high powered laser-plasma experiments, as well as other medical and industrial applications.

INTRODUCTION

Experimenters involved in recovering data from high powered laser-plasma interaction studies require a small, rugged, charge-coupled device (CCD) camera, with high spatial resolution and wide dynamic range to replace film for digital imaging of visible light, ultraviolet radiation, and soft to penetrating X-rays. Many applications require the CCD camera to be located within a vacuum chamber very close to the actual target or source. This imposes particularly tight size and vacuum compatibility restrictions on the CCD camera head.

TABLE I. CCD camera system specifications

CCD camera head sensor	
1. Image format	> 1024 × 1024 MPP
2. Pixel size	> 20 μm
3. Read noise	10 electrons @ -90°C
4. Removable window	Front and back illuminated
CCD camera head electronic	
1. Pixel rate	100kHz to 200kHz
2. CCD cooling	-30°C with TE cooler
3. Video output	Analog
CCD camera head package	
1. Size	60 × 60 × 75 mm (no lens) Fits into 3" I.D. tube
2. Vacuum compatible[a]	
CCD camera controller	
1. Size	100 × 100 × 300 mm
2. Digitization	16 bits @ up to 200kHz
3. Interface with IBM/Mac	Via serial data link

[a] The camera can also be operated out of vacuum by pumping down the CCD chamber within the camera head.

A suitable CCD camera meeting LLNL's specification (Table I) is not commercially available; therefore LLNL has taken advantage of its many years of experience in the design and development of unique CCD camera systems[1], and applied that experience towards this development.

The development and manufacture of the CCD camera head is nearing completion, and testing of prototype units is beginning. The next phase of the project is to produce a small camera controller that is also vacuum compatible and interfaces directly to a host computer via a high speed serial data link. Provisions have been made to operate the camera head with commercially available camera controllers until the completion of the next generation controller, which is scheduled for fall '94.

I. DESCRIPTION OF THE SYSTEM

A. Mechanical design

By far the most stringent design requirement for this camera is the small mechanical size of the CCD camera head. Compounding this problem is the need to cool the CCD using a thermoelectric (TE) cooler. When cooled to -30°C, the CCD presents a heat load of approximately 1W, mostly from radiative and conductive heat loads. When operating against a 1W load, the TE cooler may dissipate more than 16W. With the camera head placed in the vacuum target chamber the only way to remove TE exhaust heat is through conduction to the chamber wall or cold plate (liquid coolant is not desirable within the chamber, and the package size is too small for radiative cooling). To optimize system flexibility it was decided to provide a camera head package that doubles as a heat sink to the TE cooler and electronics, see Fig. 1. The user must provide a conductive heat path away from the camera head.

One pound of copper is used in the camera head chassis for high thermal conductivity, and provides some heat capacity. The camera will operate for approximately 5 minutes, with no external heat sink, before the chassis temperature reaches 50°C and the TE cooler shuts off, insuring that the temperature of the camera head doesn't run away and thermally fatigue the TE cooler or camera electronics.

DISTRIBUTION OF THIS DOCUMENT IS UNLIMITED MASTER

FIG 1. This photograph of the CCD camera head shows the relative size of the overall package.

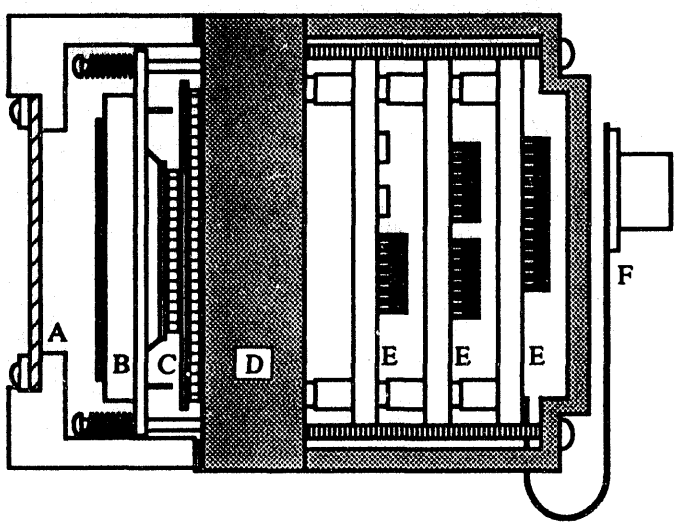

FIG 2. The CCD camera head is drawn actual size. Mounting holes and a vacuum pump down port are integrated into the copper heat sink (D). Though not shown, they don't add to the package size.

The CCD camera head is shown to scale in Fig. 2. The removable glass window (A) covers the CCD chamber. This chamber can be pumped down to operate the CCD camera head in atmosphere. A special ball valve pump down port is incorporated into the copper heat sink, and doesn't add to the size of the package. The CCD (B) is cooled by the TE cooler (C), and exhaust heat is conducted to the chassis by the copper heat sink (D), which also acts as a vacuum barrier between the CCD chamber and the camera electronics (E). The flexible connector (F) interfaces the CCD camera head to the camera controller.

B. Electrical design

Effort was made in the electronic design of the camera head to make it flexible and reliable. A block diagram of the camera head electronics is shown in Fig. 3. The field programmable gate array (FPGA) interfaces the camera head to the camera controller and can be configured to interface with commercially available camera controller technology. Eventually the FPGA will be reprogrammed to interface with the camera controller being developed. All timing signals are generated within the FPGA and passed to the CCD clock drivers, which are capable of very high speed operation and very little power dissipation. This application requires only the low power aspect of their operation. The analog video from the CCD is amplified and DC restored before being sent to the camera controller where it is digitized to 16 bits.

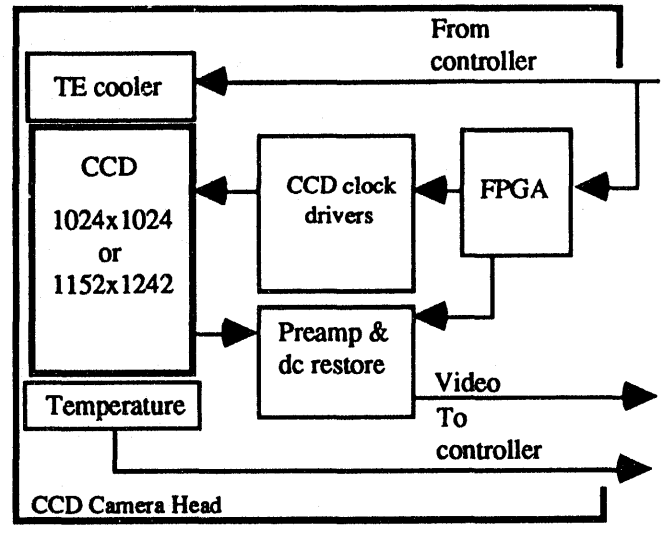

FIG 3. This is a block diagram of the CCD camera head electronics. Various inexpensive CCD header boards allow the camera to operate a variety of CCD image sensors.

C. Optical design

Using various optical and CCD sensor combinations, this camera can image a wide portion of the energy spectrum. Standard front illuminated lens coupled CCD's can image from 950 nm down to 450 nm, and back thinned, lens coupled CCD's are useful for imaging from 450 nm down to 300 nm. Fiber optic coupled CCD's are of great interest for recording images off streak cameras, and gated microchannel plate detectors.

For x-ray imaging, and other direct radiation detection, CCD's are available with removable glass windows; we have taken advantage of this in the design of the camera head. Back thinned CCD's without a cover window can be used to image x-ray energies below 1 keV. Standard front illuminated CCD's, also without a cover window, can image x-ray energies between 1 keV and 10 keV. This region is of interest to researchers at LLNL, therefore the first CCD camera units will be configured

to image in this spectrum. Fiber optic coupled CCD's that are coated with scintillators or phosphors such as CsI allow imaging of even higher energy x-rays out to 100 keV[2]

All these variations have been allowed for in the design of the CCD camera head. The future camera controller design will allow computer software to select the particular sensor used and choose between back and front illuminated CCD devices.

D. Camera controller design

The camera head is dependent on the camera controller for the its dc power, for its clock timing and command signals, and for the control of the TE cooler. In addition, the camera controller performs correlated double sampling (CDS) on the analog video from the camera head, and digitizes the result to 16 bits, before transmitting the data via a serial data link to the host computer. The host computer configures the camera system to operate in several modes (time delay integration, pixel summing, frame transfer, integrate, etc.), and can also tell the system what CCD sensor is being used and in what format, back thinned or front illuminated. Fig.4 shows a block diagram of the camera controller.

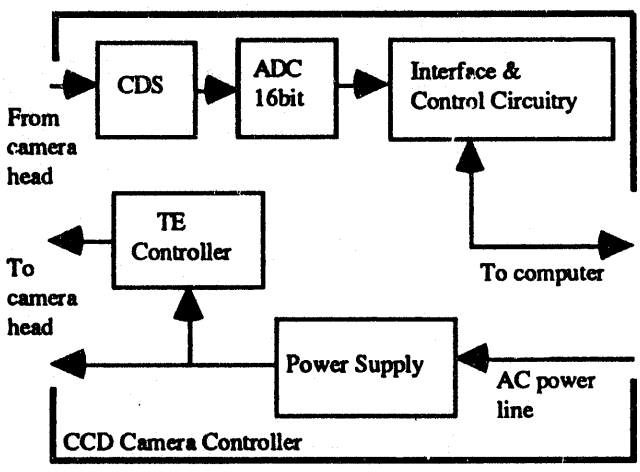

FIG 4. This is a block diagram of the CCD camera controller.

The mechanical specifications for the controller are similar to those for the camera head, namely that the size be small and the entire unit be vacuum compatible. This places the greatest restrictions on the design of the TE controller unit. The TE cooler requires modest amounts of current, 5A or more, which must be regulated to control the CCD temperature. Using linear regulators on the TE controller output line to control the current would be extremely inefficient and generate too much exhaust heat within the controller; therefore, a switching regulator is used instead, to improve efficiency and reduce unwanted exhaust heat. Care is taken to limit the complexity of the design and insure noise generation is kept to a minimum.

The camera controller is under development and functioning prototype units should be available for test in early fall '94.

II. CONCLUSION

We are completing the development of a compact, large active area CCD camera to replace film for digital imaging of visible light, ultraviolet radiation, and soft to penetrating X-rays (≤ 20 keV). Integration of such a CCD camera to existing instrumentation provides a substantial enhancement of LLNL's diagnostic capabilities for studying high energy density plasmas and other high powered laser-plasma interactions.

---

[1] A. Conder, R. Mitchell, H. Schulte, SPIE **1901**, 69 (1993)
[2] I.T. Flint, EEV Ltd, Nov. 1991

This work performed under the auspices of the U.S. Department of Energy by Lawrence Livermore National Laboratory under contract No. W-7405-Eng-48.

DATE
FILMED
8/2/94

END